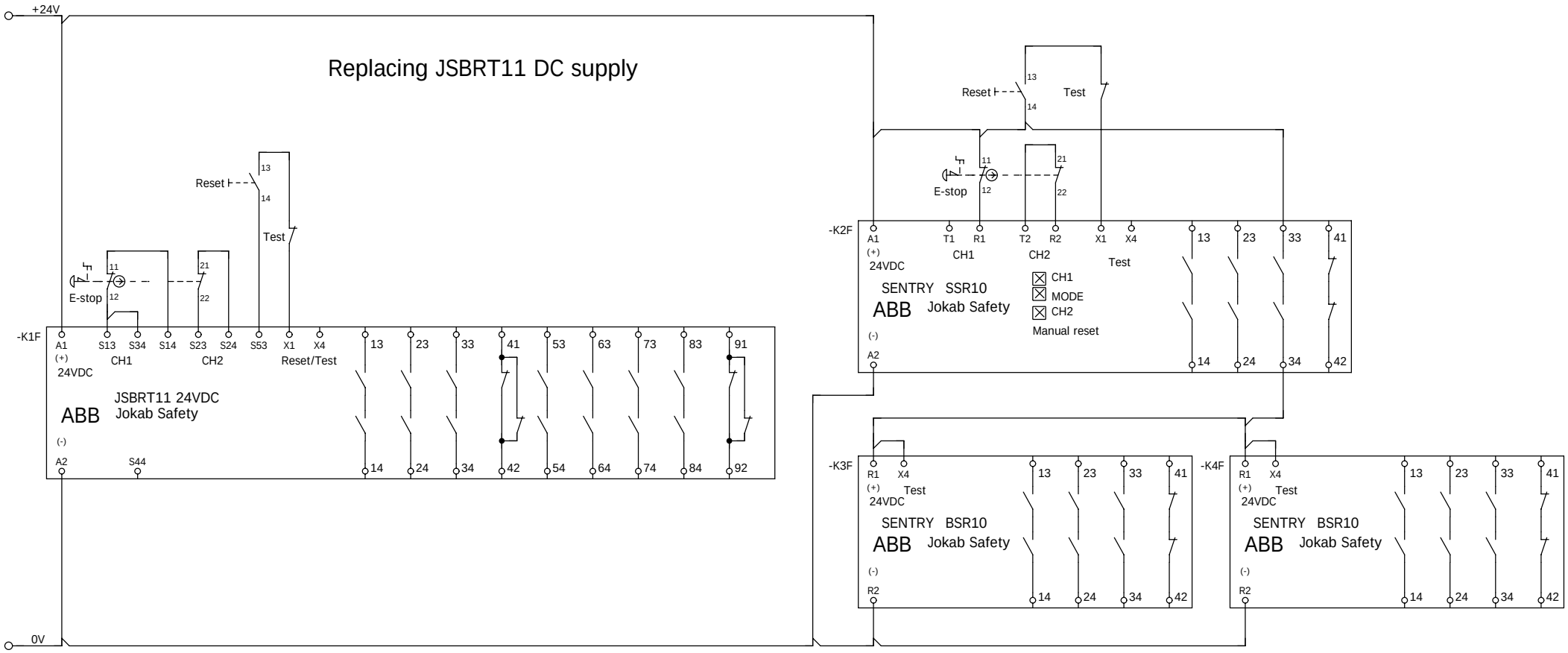

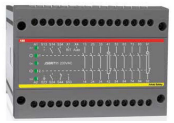

7xNO + 2xNC

Obsolete product
JSBRT11 2TLA010025R0000 (E3861113)

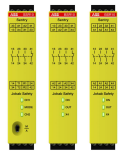

8xNO + 3xNC

1 pc SSR10 2TLA010050R0000 (E3860819)
2 pc BSR10 2TLA010040R0000 (E3860816)