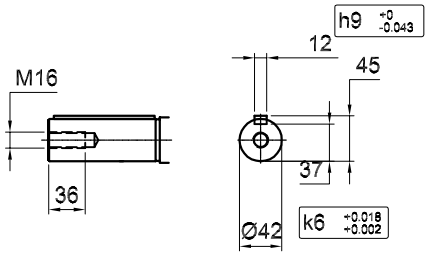

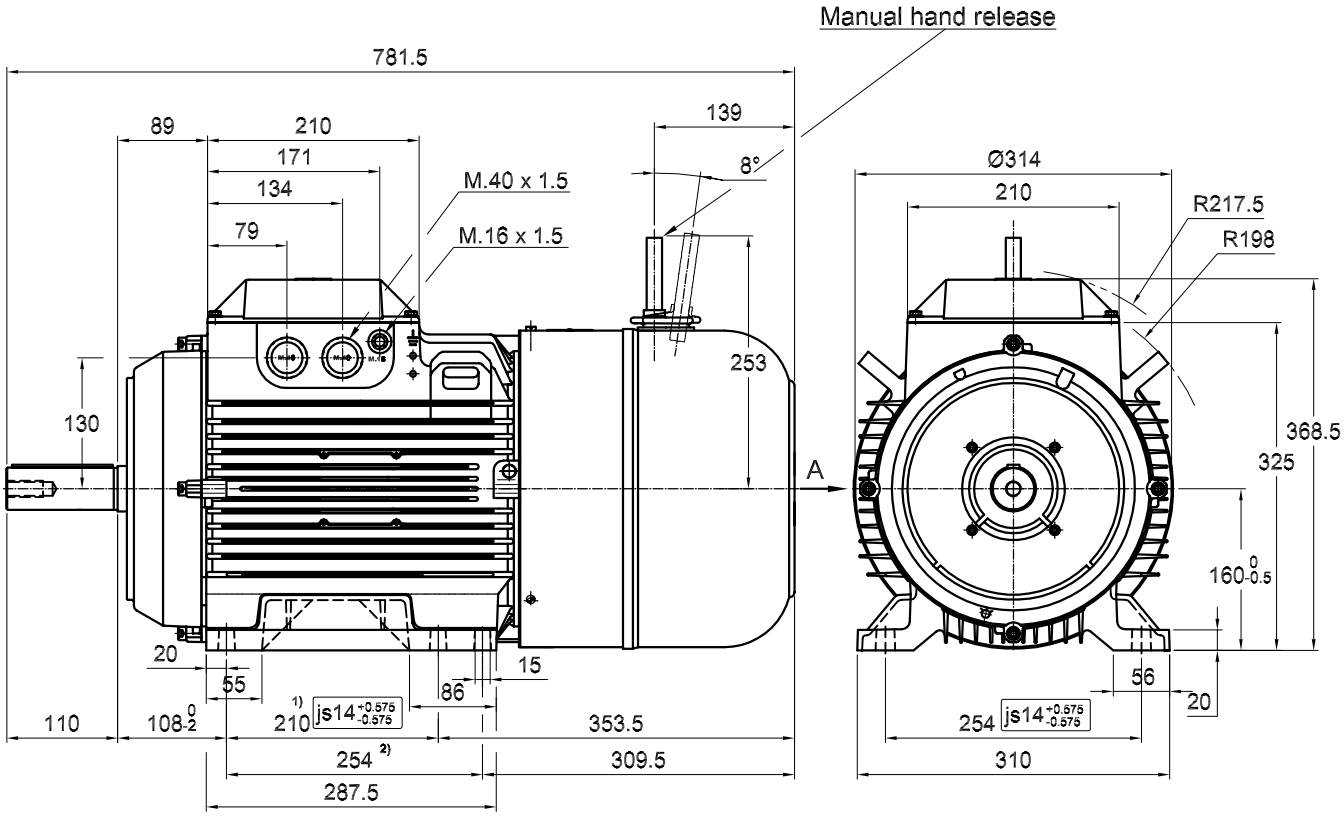

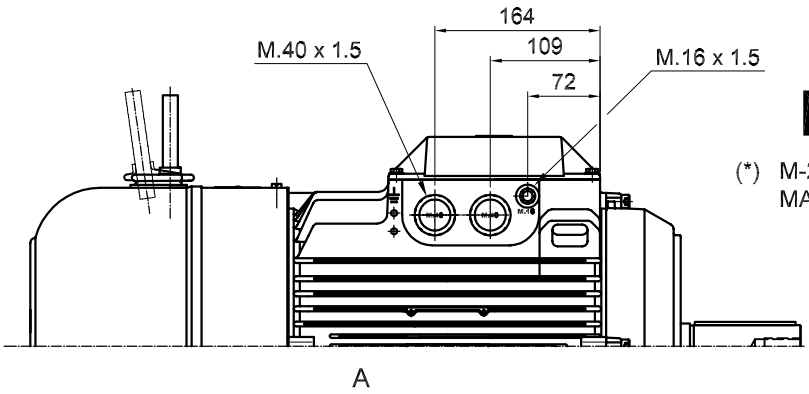

M3ARF/S 160

(*) M-2, MA-2, M-4, M-6, M-8, MA-8, L-2, L-4, L-6, MA-2/4, M-2/4, L-2/4, M-4/6, M-4/8, LB-2, LB-4

1) M3AR 160 L | **Not acc. to IEC. No corresponde a IEC.**

2) M3AR 160 M | **Not acc. to IEC. No corresponde a IEC.**

Motor Dimension Print	Motor Type : M3ARF/S 160 (*)	Document N° : AE 4439 5088-701
Description : Brake motor foot mounted IM1001 / Motor freno con patas IM1001		
Unit : División Motores, Spain.	Issued by : IKA/ J.MUÑOZ	Replaces : to date 2001-03-26
Date : 2003-01-03	Approved by : IKA/ R.PERERA	Replaced by :
ABB Automation Products, S.A.	Customer Reference :	ABB