1ZSE 5492-125 en, Rev. 3

On-load tap-changer, type UCL
Maintenance guide

Power and productivity
for a better world™

Original instruction

Recommended practices

ABB recommends careful consideration of the following factors when installing on-load tap-changers:

Before you install or commission a unit, make sure that the personnel doing the job have read and fully understood the installation and commissioning guide provided with the unit.

To avoid damaging the unit, never exceed the operating limits stated in delivery documents and on rating plates.

Do not alter or modify a unit without first consulting ABB.

Follow local and international wiring regulations at all times.

Use only factory authorized replacement parts and procedures.

Safety warnings

The following warnings and notes are used in the manual:

WARNING

WARNING indicates an imminently hazardous situation, which if not avoided will result in death or serious injury. This signal word is to be limited to the most extreme situations.

WARNING also indicates a potentially hazardous situation, which if not avoided could result in death or serious injury.

CAUTION

CAUTION indicates a potentially hazardous situation, which if not avoided may result in minor or moderate injury. It may also be used to alert of unsafe practices.

CAUTION may also indicate property-damage-only hazards.

INFO provides additional information to assist in carrying out the work described and to provide trouble-free operation.

Safety precautions

WARNING

The Maintenance guide should be read and understood before any work is started, and the procedures in this document should be followed at all times.

WARNING

Before any work is carried out on the tap-changer: Make sure that the transformer is disconnected and that grounding is properly conducted. Obtain a signed certificate from the engineer in charge.

WARNING

Before carrying out work on the tap-changer, put the LOCAL/REMOTE switch on the motor-drive mechanism to position 0. It is also advisable to shut the door of the motor-drive mechanism and pad lock it when work is carried out on the tap-changer. The key should be kept by the operator. This is done to avoid an unexpected start of the motor-drive mechanism.

WARNING

Before starting any work inside the motor-drive mechanism, the auxiliary power must be switched off.

NOTE: The motor, contactors and heating element may be energized from separate sources.

WARNING

In no case should any person go down into the diverter switch housing. The cleaning of the diverter switch housing should be carried out by using brushes and rags and by flushing with oil.

CAUTION

Approval should be given for inspection as well as for operating the on-load tap-changer.

CAUTION

ABB recommends that only maintenance engineers trained by ABB carry out contact replacement.

During service

WARNING

Small amounts of explosive gases may be emitted from the breathing devices (dehydrating breather or one-way breather). Make sure that no open fires, hot surfaces or sparks occur in the immediate vicinity of the breathing devices.

WARNING

If a power supply failure occurs during operation, the operation will be completed when the power returns.

WARNING

The hand crank must not be inserted during electrical operation.

WARNING

If the tap-changer is not at its exact position and the hand crank is pulled out, the motor-drive mechanism will start and go to the exact position if the power supply is on.

CAUTION

After a pressure relay trip, follow the instructions in the chapter “Trip or alarm from supervisory devices” in the user's manual.

During oil handling

WARNING

Unused transformer oil is harmful. Fumes from unused warm oil may irritate the respiratory organs and the eyes. After long and repeated contact with transformer oil, skin becomes very dry.

Used tap-changer oil from diverter switch housings and selector switch housings contains harmful substances. Fumes are irritating to the respiratory organs and the eyes and are highly flammable. Used transformer oil may well be carcinogenic.
Avoid contact with the oil and use oil-tight protective gloves when handling the oil.

First aid:
Skin contact: Wash your hands. Use skin cream to counteract drying.
In the eyes: Rinse your eyes in clean water.
Swallowing: Drink water or milk. Avoid vomiting. Call a doctor.

Collect used oil in oil drums.

Waste and clean-up: Should be absorbed by an absorber. Treat it as hazardous to the environment.

In the event of fire: Any fires should be extinguished with powder, foam or carbonic acid extinguishing agents.

WARNING

When oil that has been used in a diverter switch housing is pumped out, grounded conducting tubes and hoses should be used to avoid the risk of explosion due to the gases produced by arcs during service.

WARNING

The oil in the selector switch compartment may be hot. Be cautious!

WARNING

There is always a cushion of explosive gases in the top of the diverter switch housing. No open fire, hot surfaces or sparks may be present during opening of the housing or draining from the valve. After the cover is removed let the gas vent away approximately 15 min before any work is started.

WARNING

Be aware of the risk for slipping caused by oil spillage, for instance when working on the transformer cover.

CAUTION

Take care to avoid ingestion of moist air when oil is drained. If the ambient air is moist, let incoming air pass through a dehydrating breather with slow air flow to obtain proper dehydration.

CAUTION

Do not fill the diverter switch housing with oil if the transformer tank is under vacuum and the on-load tap-changer is not.

CAUTION

Do not fill the transformer tank with oil if the on-load tap-changer is under vacuum and the transformer tank is not.

CAUTION

Leave a gas cushion on top of the oil in the diverter switch housing.

After oil filling

CAUTION

Do not energize the transformer earlier than three hours after oil filling at atmospheric pressure. This waiting period is needed to allow air bubbles to dissipate.

Mounting of gaskets

CAUTION

Sealing surfaces and gaskets must be clean and undamaged. Diametrically opposed bolts in sealing joints must be tightened alternately several times, beginning with a low tightening torque and finally with the recommended tightening torque as described in section 1.3 Tightening torque, in this guide.

Content

1. Introduction

1.1 General

The UC range of on-load tap-changers manufactured by ABB has been developed over many years to provide maximum reliability. The simple and rugged design gives a service life equal to the service life of the transformer. Minimum maintenance is required for trouble-free operation. The only parts requiring maintenance are contacts that might need replacement during the service life, the insulating oil and the motor-drive mechanism.

The design allows excellent access to all parts, making inspection and maintenance quick and simple.

The on-load tap-changer, type UCL, is housed in the transformer tank. The motor-drive mechanism is attached to the transformer tank and connected to the on-load tap-changer by means of drive-shafts and a bevel gear, see Fig. 1.

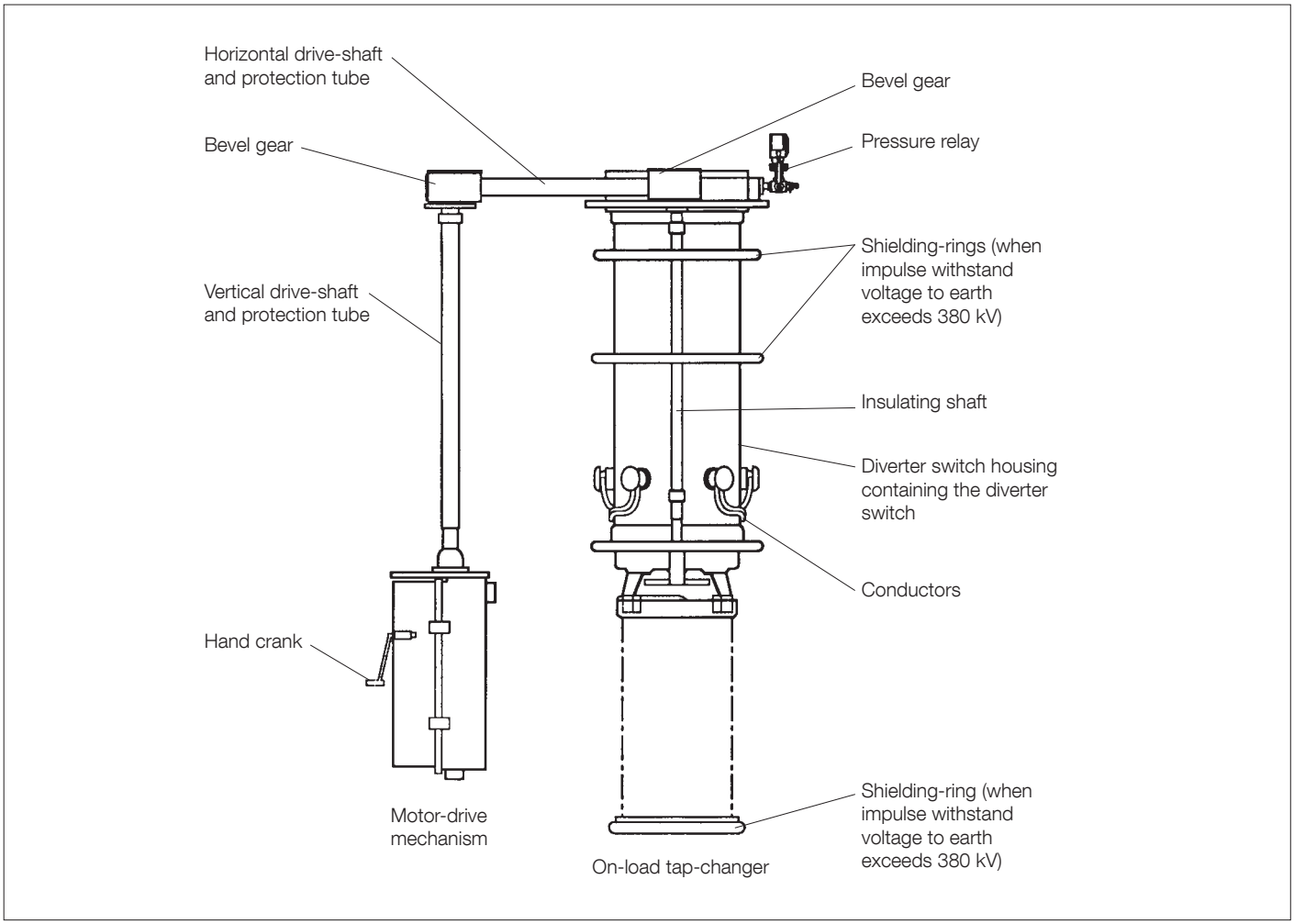

Fig. 1. On-load tap-changer and motor-drive mechanism.

Fig. 2 shows the general arrangement of an on-load tap-changer type UC. The main components are the spring-operated diverter switch and the tap selector with sliding contacts. For maintenance the diverter switch is lifted. The contacts are then immediately accessible and can be inspected for wear. The drive-shafts should not be dismantled when lifting the diverter switch.

Maintenance is normally not required on the parts operating in the oil of thetransformer tank. However, when the on-load tap-changer has made one million operations a check of the tap selector is recommended.

The diverter switch has its own housing separate from the transformer oil. This is to prevent contamination of the transformer oil since the diverter switch oil deteriorates due to the switching operations. The oil needs to be checked and filtered at regular intervals to maintain adequate dielectric strength as well as to prevent mechanical wear.

It is necessary to inspect the contacts and clean the insulation parts of the diverter switch as well as to clean the housing inside at regular intervals.

The main components of the diverter switch are:
- Fixed main contacts
- Moving main contacts
- Fixed transition contacts
- Moving transition contacts
- Transition resistors
- Spring-driven polygon link system

Besides the maintenance of the diverter switch and cleaning of the oil, the motor-drive mechanism should be checked and lubricated.

The pressure relay, the device that protects the transformer from damages due to excessive pressure in the diverter switch housing, should also be checked.

i

One on-load tap-changer of UCL type may consist of one, two or three units driven by a common motor-drive mechanism. The instructions in this guide deals with one unit. If there are two or three units, all work decribed should be carried on all units unless otherwise is stated. If more than one diverter switch is lifted out at the same time, make sure the right diverter switch is lowered into the right housing (compare with the serial numbers, see Fig. 2).

1.2 Maintenance schedule

Maintenance of the on-load tap-changer consists of three major steps:
- Inspection
- Overhaul
- Contact replacement

1.2.1 Inspection

It is recommended to perform an inspection once a year. This principally concerns the motor-drive mechanism and refers to a visual inspection inside the motor-drive cabinet to check that nothing is loose and the heater is functioning.

In the motor-drive mechanism a counter registers every tap-changer operation. During inspection the counter is read. If possible, motor and counter are tested by operating one step and then back.

If the on-load tap-changer has its own oil conservator, the breather and the oil level indicator are checked according to the instructions from the transformer manufacturer.

The inspection is carried out while the transformer is in service.

If the on-load tap-changer is equipped with an oil filter unit from ABB, it should be inspected once a year according to the oil filter unit manual.

1.2.2 Overhaul

The contact life and the frequency of operations or the time in service determine the time interval between overhauls.

The number of operations run by the on-load tap-changer is recorded by a counter, housed in the motor-drive mechanism cabinet. The registered number of operations should be noted at every inspection and overhaul.

The on-load tap-changer should normally be overhauled regularly at intervals of 1/5 of the estimated contact life. The relevant information is stated on the rating plate. Hereby, the contact wear can be followed and necessary preparations can be made for replacing the contacts.

If the tap-change operations occur infrequently and a very long time elapses until the number of operations amounts to 1/5 of the contact life, the interval between overhauls should be limited to the time stated on the rating plate (normally 7 years).

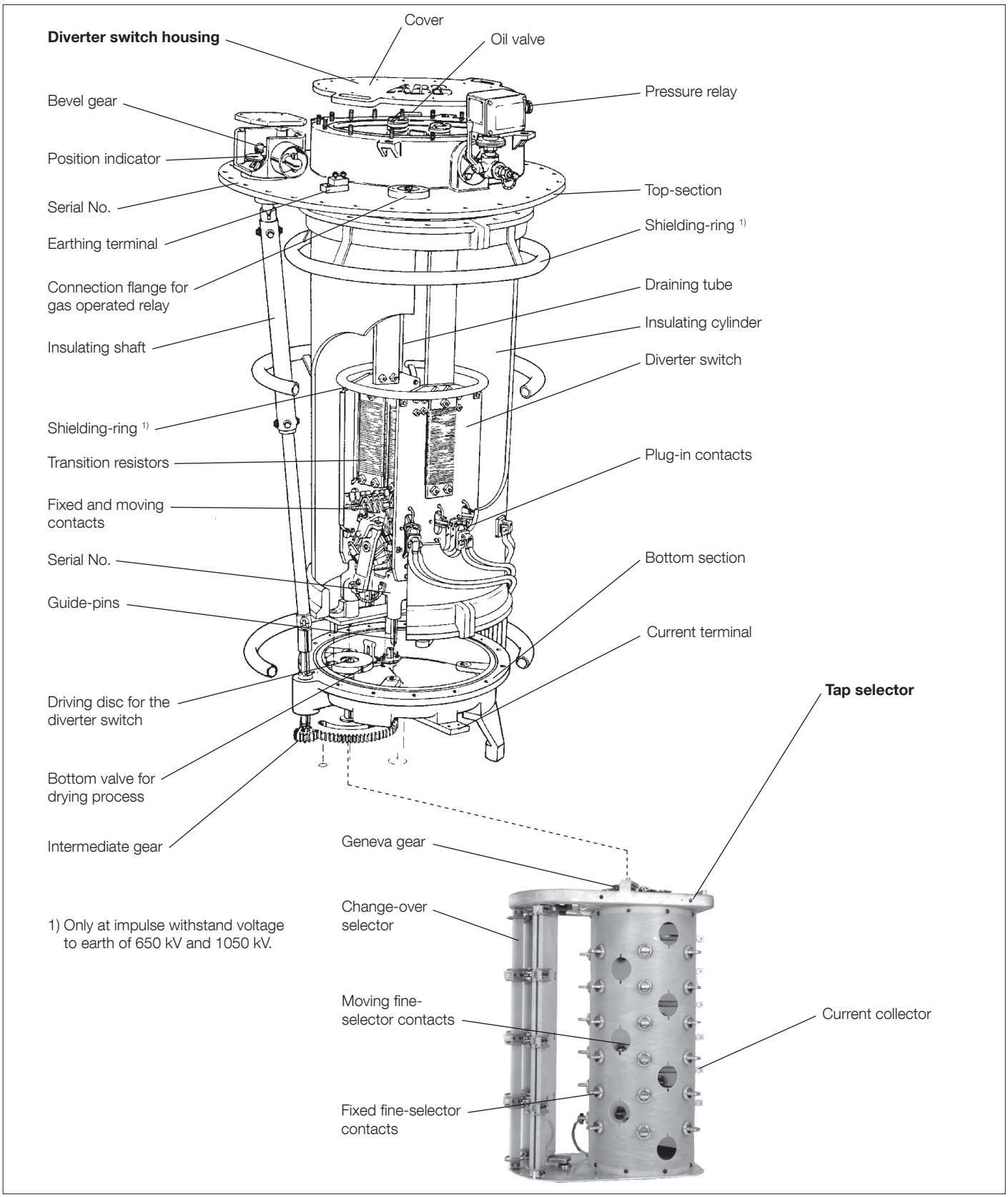

1) Only at impulse withstand voltage to earth of 650 kV and 1050 kV.

Fig. 2. General arrangement of on-load tap-changer, type UC.

1.2.3 Contact replacement

On the rating plate of the on-load tap-changer the estimated contact life of the breaking contacts in the diverter switch at rated load is stated.

The contacts will withstand a very large number of switching operations. For normal power transformers the number of operations of the diverter switch is approximately 20 per day, which means that replacement of the contacts is not normally necessary during the life of the transformer. (In case of on-load tap-changers on furnace transformers, the frequency of operations may be considerably higher).

CAUTION

The number of operations must in no case exceed 500 000, due to weakening spring tension of the contacts.

1.3 Tightening torque

The following tightening torques are recommended:

For metallic screw joints:	M6	10 Nm	±10 %
	M8	24.5 Nm	±10 %
	M10	49 Nm	±10 %
	M12	84 Nm	±10 %
For non-metallic screw joints:	M10	9 Nm	±10 %
	M12	13 Nm	±10 %
	M16	22 Nm	±10 %

if not otherwise stated in this guide.

2. Inspection

The inspection mainly consists of a visual check of the motor-drive mechanism and the conservator once a year while the transformer is in service.

In the motor-drive mechanism the following points are to be checked:
- Motor and counter
- Heater
- The counter's value
- Visual check of the toothed belt

See the maintenance guide for motor-drive mechanisms (1ZSC000498-ABH) for information about the procedure.

On the conservator the following are to be checked:
- Oil level
- Breather

WARNING

The breathers and the tube from the conservator contains explosive gases. No open fire, hot surfaces or sparks may be present when loosening the breather.

CAUTION

Approval should be given for inspection as well as for operating the on-load tap-changer.

1. Check the breathers according to the instructions for the transformer.
2. Check the oil level in the conservator for the on-load tap-changer. The oil level should be according to the transformer documentation.

3. Overhaul

WARNING

Before any work is carried out on the on-load tap-changer: Make sure that the transformer is disconnected and that earthing is properly carried out. Obtain a signed certificate from the engineer in charge.

3.1 Required tools and materials

Necessary for the overhaul is the following equipment:
- Standard hand tools (keywidth up to 19 mm)
- Standard set of combination spanners
- Pipe wrench
- Thickness gauges (0.40; 0.50; 1.20 mm)
- Small hammer
- Sliding caliper
- Spring balance (10 N)
- Watch (with hand for seconds)
- Oil can
- Ohmmeter (1-30 Ohm)
- Air pump with pressure gauge (0-200 kPa) and connection to R 1/8” male thread
- Telpher (at least 200 kg lifting force)
- Empty and clean barrels for transformer oil (calculate with max. 400 l for each diverter switch housing)
- Oil draining and filtering equipment with connections
- Test equipment according to IEC 00156, 1995-08
- Two buckets (approximately 10 l)
- Rags (lint-free)
- 50 l of new transformer oil (class II according to IEC 00296, 2012-02)
- Standard lithium complex or calcium complex grease with EP additive NLGI 2. Temperature range from -30°C to +100°C. Suggested products: Dow Corning Molykote Multilub, Gulf Crown EP 2 or similar.
- Oil (for plain ball and roller bearings)
- Degreasing agent
- Protective glooves, oil proof
- Dimension drawing for the on-load tap-changer
- Pen and note pad
- Set of spare contacts (see the spare parts list)
- New O-ring for the cover (540x8)

When restoring the gas cushion. (section 3.17.5):
- Small oil pump with connection to the oil valve
- Empty and clean barrel for transformer oil (~ 25 l)
- Box wrench, 6 mm

When measuring contact timing, add this equipment:
- See section 3.18

When replacing contacts (chapter 4), add this equipment:
- Universal pliers
- Pipe wrench
- 6 mm mandrel
- 10 mm steel mandrel
- 5 mm brass mandrel, 400 mm long
- Steel ruler
- Round file
- Torque wrench (10 Nm)
- Piece of wood, 50 mm thick, 400 mm long

3.2 Procedure

The overhaul procedure includes the following points:
- Oil testing and oil draining
- Lifting and cleaning the diverter switch
- Cleaning the diverter switch housing and the oil filter (if any)
- Oil filtration
- Checking the breathers
- Checking the contact positions
- Checking the contact wear
- Checking the transition resistors
- Checking before lowering the diverter switch
- Lowering the diverter switch
- Checking the pressure relay
- Lubrication
- Checking the motor-drive mechanism (see the maintenance guide for the motor-drive mechanisms)
- Oil filling
- Check of contact timing
- Putting into operation

3.3 Preparations

If the on-load tap-changer is oil filled under atmospheric pressure, a waiting period of three hours is needed before energizing. To save out of service time of the transformer, carry out all work on the on-load tap-changer and the oil filling before the maintenance of the motor-drive mechanism is started.

3.3.1 On-load tap-changer position

Note the position of the on-load tap-changer to enable restart of the transformer in the right tap position.

3.3.2 Disconnection and earthing of the transformer

WARNING

Before starting any work in the on-load tap-changer the protective motor switch and the LOCAL/REMOTE switch must be set at 0.

WARNING

Before any work is carried out on the on-load tap-changer: make sure that the transformer is disconnected and that earthing is properly carried out. Obtain a signed certificate from the engineer in charge.

3.3.3 Oil volumes and lifting heights

The necessary number of empty drums for collecting and filtering of the oil in the diverter switch housing should be kept ready. The drums must be carefully cleaned and free from water. New oil needed should be of class II according to IEC 60296, 2012-02.

Quantity of oil in the diverter switch housing and lifting height for the diverter switch		
UCL..	380/...	Approx. 300 litres (lifting height 1.5 m)
UCL..	650/...	Approx. 350 litres (lifting height 1.7 m)
UCL..	1050/...	Approx. 390 litres (lifting height 1.9 m)

The volume of the oil conservator is not included.

Alternatively, the oil may be replaced by new oil and the used oil filtered at some later occasion. A certain quantity of new oil, at least 50 litres, should be kept ready to replace waste oil and for cleaning.

CAUTION

Do not energize the transformer until oil has been filled as per section 3.17 ”Oil filling” in this guide.

3.3.4 Recommended set of spare parts

It is recommended to have a set of contacts for the diverter switch available during the overhaul, see the spare parts list for ordering.

3.4 Oil testing and oil draining

The diverter switch housing is equipped with an oil valve placed on the top section. For connection dimensions, see the dimension drawing for the on-load tap-changer.

WARNING

The oil in the diverter switch housing may be hot. Be cautious!

Take an oil-sample from the oil valve and carry out the dielectric strength test according to IEC 60156, 1995-08 (between spherical calottes, distance 2.5 mm). This test is carried out for deciding whether the oil can be filtered or must be exchanged.

The dielectric strength of the oil should not be allowed to be less than 120 kV/cm for an on-load tap-changer in service.

When taking the oil-sample, first drain some oil into a bucket to clean the valve.

If the oil conservator of the on-load tap-changer is common with the oil conservator of the transformer tank, close the valve in the pipe connection to the oil conservator and open the oil valve. After a while, open the air release valve. See Fig. 10.

CAUTION

Never block the hole in the draining tube!

If the on-load tap-changer is equipped with an oil filter unit for continuous oil filtration from ABB and it is maintained and operated according to our instructions, oil draining and filtering is not needed, provided that the dielectric strength is at least 160 kV/cm (IEC 60156, 1995-08).

There is a hole in the upper part of the draining tube to prevent air from being trapped inside the tube when oil filling. The air sucked in through this hole when draining might disturb the function of some types of pumps. In such case, drain the oil using a hose instead.

Use the filtering equipment or the pump to drain oil from the on-load tap-changer into carefully cleaned oil drums. Connect the pump to the oil valve and drain the oil from the diverter switch housing and the conservator. Draining can be effected quickly if filtering equipment is used and at the same time the whole oil quantity will be filtered once. Remove the cover of the diverter switch housing while draining.

WARNING

There is always a cushion of explosive gases in the top of the diverter switch housing. No open fire, hot surfaces or sparks may be present during opening of the housing or draining from the valve. After the cover is removed let the gas vent away approximately 15 minutes before any work is started.

WARNING

When oil that has been used in a diverter switch housing is pumped out, conducting tubes and hoses that are earthed should be used to avoid the risk of explosion due to the gases produced by the arcs during service.

Drain the remaining oil in the bottom of the housing by using a hose.

3.5 Lifting and cleaning the diverter switch

The weight of the diverter switch is approximately 125 kg.

Lift the diverter switch partly so you can flush it with oil. After careful flushing, lift the diverter switch from the housing and wipe it with rags. Lift according to Fig. 4.

WARNING

Make sure the lifting equipment is properly fixed to the cover flange before the diverter switch is lifted.

CAUTION

When lifting the diverter switch, use a manually operated telpher to avoid damages on the diverter switch. Make sure that the end of the tie-rod or its coupling is kept clear of the inner edge of the flange.

If the on-load tap-changer is equipped with an oil filter unit for continuous oil filtration from ABB and it is maintained and operated according to our instructions, the flushing and wiping of the diverter switch is not necessary.

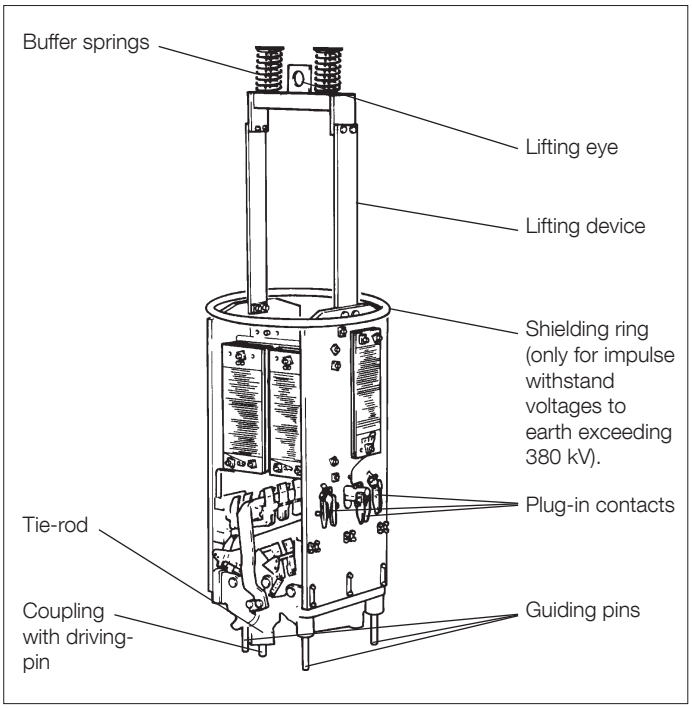

Fig. 3. Diverter switch, general arrangement.

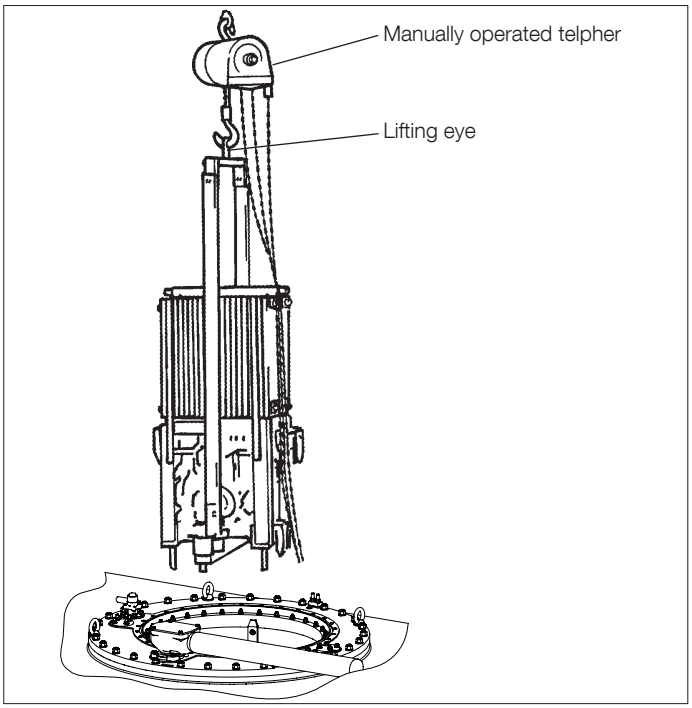

Fig. 4. Lifting arrangement.

3.6 Cleaning

3.6.1 Cleaning the diverter switch housing

Clean the inner walls of the housing by means of a nylon brush, then flush with oil. Drain the oil. Wipe the bottom and inner walls with rags.

WARNING

In no case should any person go down into the diverter switch housing. The cleaning of the diverter switch housing should be carried out by using brushes and rags and by flushing with oil.

If the on-load tap-changer is equipped with an oil filter unit for continuous oil filtration from ABB and it is maintained and operated according to our instructions, the cleaning of the diverter switch is not necessary.

3.6.2 Cleaning the oil filter in the conservator pipe (if any)

The diverter switch housing and the oil conservator are connected by a pipe. The diverter switch oil is contaminated due to the arcing that occurs when the contacts operate. In case of a common conservator with the transformer the impure oil in the diverter switch housing must be prevented from entering the oil conservator. An oil filter is therefore mounted in the pipe.

The filter, which is mounted in a flange pipe on the top of the diverter switch housing, is screwed from the inside. It can easily be screwed out for inspection and cleaning.

The oil filter does not need to be replaced nor cleaned in any other way than by washing with oil.

3.7 Oil filtration

The drained oil should be filtered until it is cleaned and has regained the high dielectric strength required. The break-down value for purified oil should be at least 160 kV/cm according to IEC 60156,1995-08.

To check the result of the filtering, take test sample after the oil has been filled into the on-load tap-changer.

If the on-load tap-changer is equipped with an oil filter unit for continuous oil filtration from ABB and it is maintained and operated according to our instructions, no further oil filtration is necessary. Only take an sample and measure the dielectric strength of the oil, see section ”Oil testing and oil draining” in this guide.

3.8 Checking of the breathing device

Check the breathing device according to the instructions from the transformer manufacturer.

WARNING

The breathers and the tube from the conservator contains explosive gases. No open fire, hot surfaces or sparks may be present when loosening the breather.

3.9 Checking the contact positions

Those parts of the fixed contacts and the moving contacts which are exposed to arcing during an operation are tipped by copper-tungsten.

In a tap position, the moving main switching contacts and the fixed main switching contacts should have a clearance of min. 0.5 mm as shown in Fig. 5.

For checking the clearance on both sides of the diverter switch it has to be operated. Operate it by turning the coupling with a pipe wrench. Note the position of the diverter switch before operation.

WARNING

Take care to avoid finger injuries when operating the diverter switch. Oil splash occurs during operation, especially in the moving direction.

You may adjust the clearance by filing off the trailing edge of the fixed breaking contact and moving it backwards slightly, max 1 mm. Operate the diverter switch to the opposite side when adjusting the clearance. For loosen the contacts, see section 4.6. Operate the diverter switch to the opposite side when filing. Operate the diverter switch back to the first side and check the clearance again. If still too small, file and test again. Make sure all washers and screws are put back and tighten. Proceed with the other side of the diverter switch. When finished, operate the diverter switch back to the position it had before the first operation.

Fig. 5 shows the current carriers through the fixed main contact and the copper part of the moving contact.

Fig. 6 shows the copper-tungsten tips of the transition contact touching each other in a tap position.

Make sure that all flexible connections, operating springs, contact springs and all plug-in contacts are in good condition. Make sure that no bolts have worked loose.

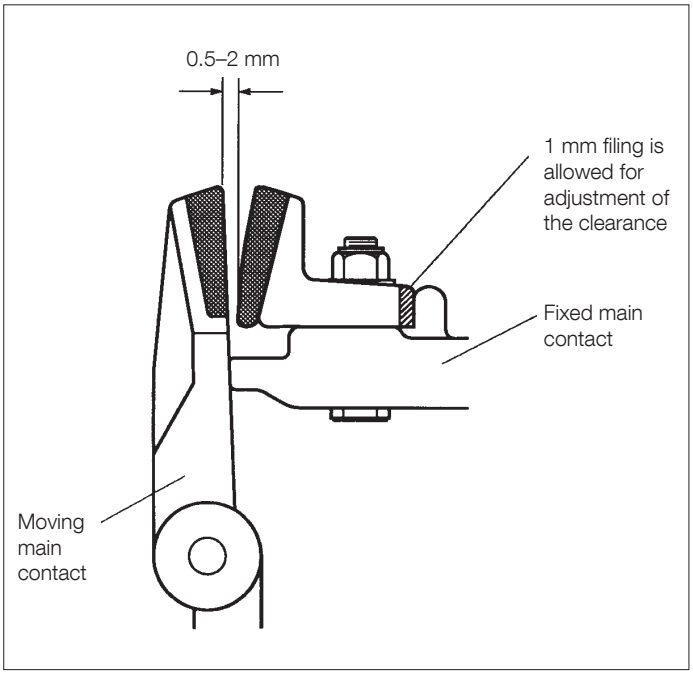

Fig. 5. Fixed and moving contacts clearance.

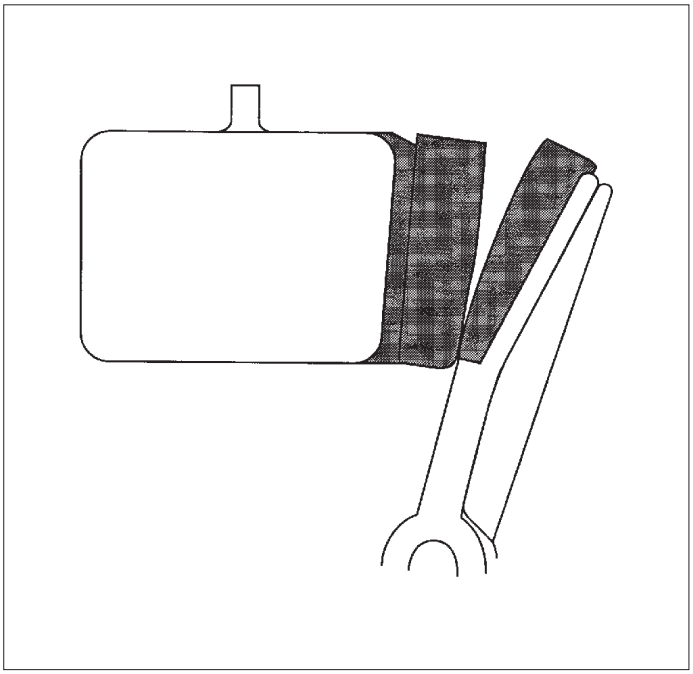

Fig. 6. Transition contacts.

3.10 Checking the contact wear

The contact system consists of fixed and moving contacts.

Check the degree of contact burning on the breaking contacts.

For a new contact with tips of copper-tungsten (Fig. 7), the thickness at (A) and (B) is 5.5 mm in the upper end of the contact. In the lower end, the thickness is 3 mm.

Estimate the degree of contact burning and record this to enable comparison with the condition at the next overhaul. Do not file or smooth the burned and pitted contact surfaces.

A contact with a tip of copper-tungsten should be replaced when the thickness at (A) and (B) in the upper end of the contact is approximately 0.5 mm. (The thickness in the upper and the lower end of the tip will be approximately the same when close to the limit for replacement).

Also replace contacts which are assumed to wear out before the next overhaul.

The dimensions above are valid for both main contacts and transition contacts. For contact replacement, see chapter 4 ”Contact replacement”.

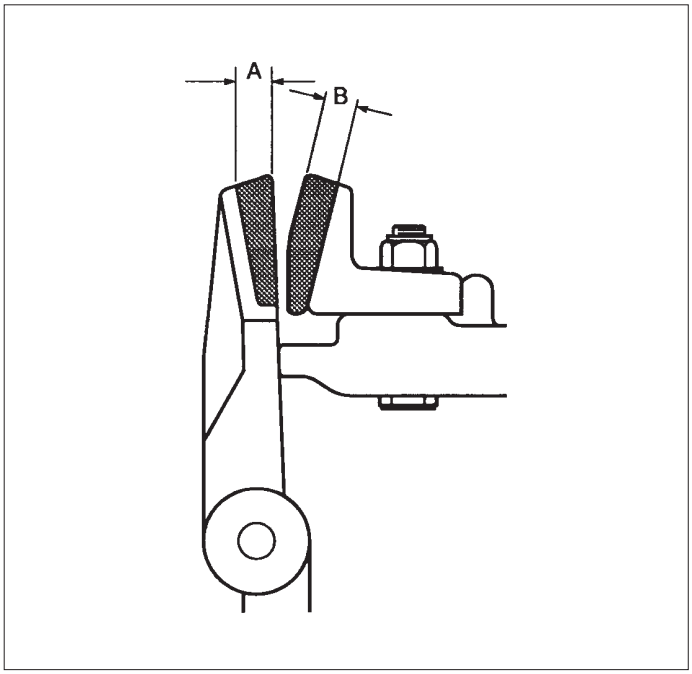

Fig. 7. Tolerance limits for contact erosion.

3.11 Checking the transition resistors

Measurement is carried out on the side with open contacts. Connect one cable from the ohmmeter to a fixed main contact and the other cable to a fixed transition contact. Measure the resistance.

Measure the resistance of each resistor branch across the open switch.

Operate the diverter switch to the other side as described in section 3.9 and measure the resistance with open contacts.

Check that the resistors are undamaged and compare with the value on the rating plate. The values must not differ by more than 10 %.

Check that nothing has worked loose. Operate the diverter switch back to its previous position.

3.12 Checking before closing

Before installing the diverter switch, make sure that no foreign objects, tools, wires, rags etc. are left in the diverter switch housing.

3.13 Installation of the diverter switch

CAUTION

Check the serial numbers to make sure that the diverter switch is mounted in the correct housing, see Fig. 2.

CAUTION

Make sure that the diverter switch housing is clean and dry and that no foreign objects (tools etc.) are left in the housing.

CAUTION

Lower the diverter switch into its housing carefully so that neither the diverter switch nor the housing are damaged.

The UCL diverter switch is provided with guiding slots that fit against the guide bar and the draining tube in the diverter switch housing, see Figs. 8 and 9.

Rotate the diverter switch so the half-circle shaped guiding slot is aligned with the oil draining tube.

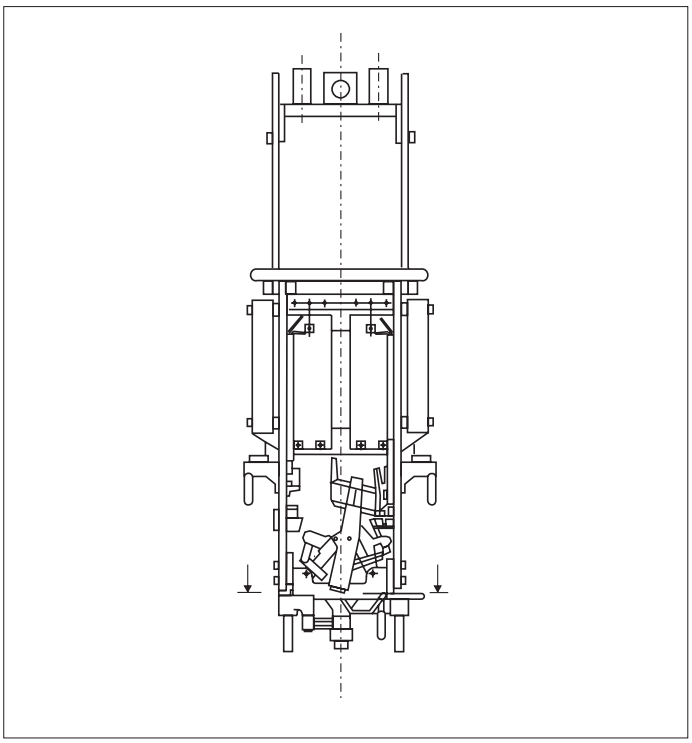

Fig. 8. Diverter switch.

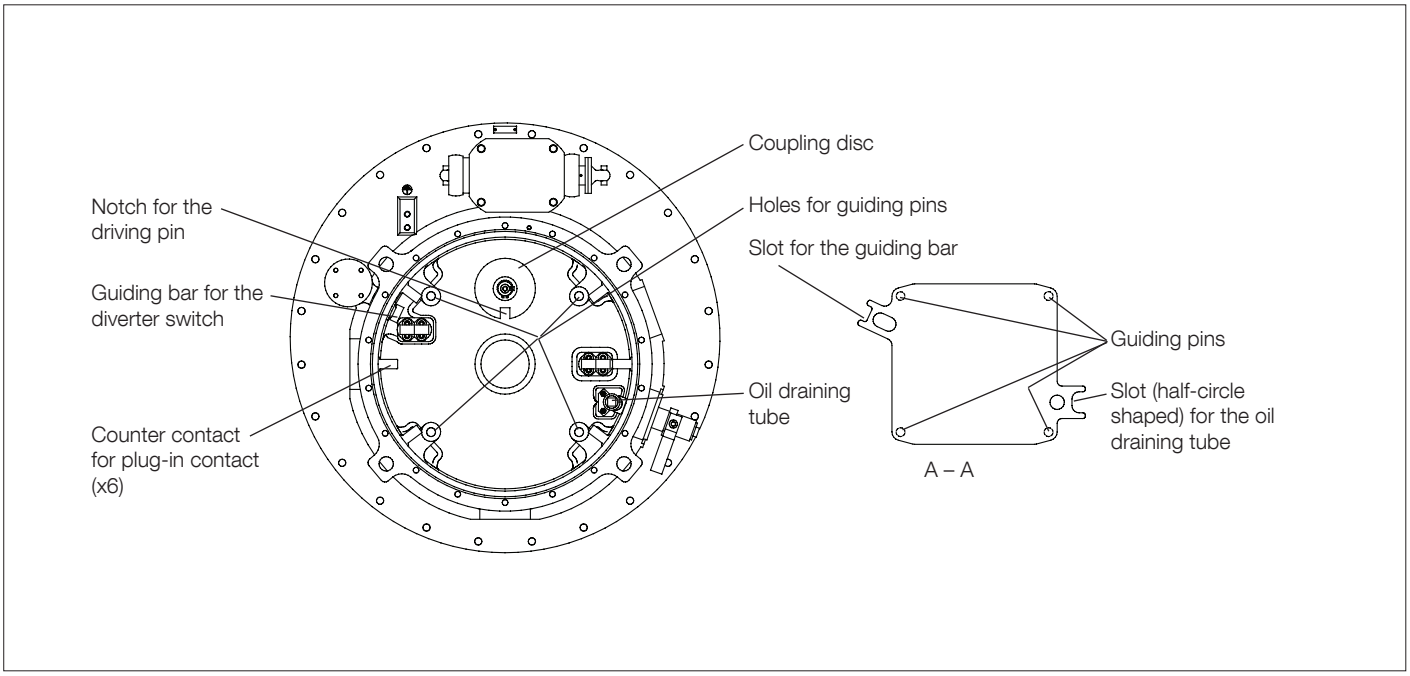

Fig. 9. UCL diverter switch housing, view from above.

When the diverter switch is lowered, check visually that its plug-in contacts are aligned with the counter contacts in the cylinder wall.

In order to ensure that the diverter switch pin has engaged the coupling disc, carry out at least **three** tap change operations in **one** direction. A distinct sound is heard when the diverter switch operates which indicates that the driving pin of the diverter switch has been connected.

If no sound is heard, the diverter switch might need to be pushed down while operating the motor drive.

Carry out another three operations in the same direction while pushing the diverter switch down.

> It may be necessary to push and pull the lifting device of the diverter switch a little to and fro while pushing it down.

The top part of the diverter switch lifting device should be below the level of the machined surface for the cover when lowered to its final position. Only the springs of the lifting device should be above this level.

If check of contact timing should be carried out, proceed with that according to section 3.19 before mounting the cover.

Insert a new O-ring for the cover in the upper flange. Mount the on-load tap-changer cover. Turn the cover so the guiding pin in the housing is facing the guiding hole in the cover. (The cover has to be pressed down in order to overcome the spring force of the springs that hold the diverter switch pressed in place). Insert screws and tighten them.

3.14 Checking and replacing supervisory equipment

Accessories and safety devices that are not standard, but might be mounted at delivery, are described in instruction 1ZSC000562-AAD.

3.15 Lubrication of the on-load tap-changer and the drive shaft system

The bevel gears are greased at delivery and the same type of grease is used for the couplings of the outer shaft system.

For access to the couplings, loosen the hose-clips and push the protective tubes together. For access to the bevel gears, dismount the covers.

> **WARNING**
>
> The bevel gear contains moving gears. Be cautious!

> **WARNING**
>
> Rotating shafts. Be cautious!

Check and lubricate with grease if necessary. Use standard lithium complex or calcium complex grease with EP additive NLGI 2. Temperature range from -30°C to +100°C. Suggested products: Dow Corning Molykote Multilub, Gulf Crown EP 2 or similar.

Remount the covers (make sure the gaskets are properly in place).

3.16 Checking of the motor-drive mechanism

See the maintenance guide for the motor-drive mechanism.

3.17 Oil filling

If check of contact timing is to be carried out, see section 3.18, fill the diverter switch housing with oil up to the level of the fixed main breaking contacts by easiest possible method before checking. Oil fill completely according to the instructions below after check of contact timing.

3.17.1 Filling methods and restrictions

Oil filling can be carried out at atmospheric pressure or under vacuum. The wall between the diverter switch housing and the transformer tank is designed to withstand vacuum on one side and atmospheric pressure on the other side. It is not allowed to have vacuum on one side and the pressure of an oil column on the other side.

After maintenance oil is normally filled at atmospheric pressure. This procedure is described in section 3.17.3. If filling is to be carried out under vacuum, see the Installation and commissioning guide.

After oil filling, a gas cushion should remain on the top of the oil in the diverter switch housing.

The connection to the oil conservator is designed to automatically give a gas cushion when filling at atmospheric pressure.

> ℹ If new oil, especially degassed oil, is filled into the diverter switch housing and the number of operations is low, the gas cushion may be dissolved in the oil. The oil level in the oil conservator should then be checked after a month in service and if the oil level is lower than after the oil filling, (corrected for temperature differencies), the gas cushion should be restored according to section 3.17.5 ”Restoring the gas cushion” in this guide.

3.17.2 Before filling

> ℹ Oil filling may be carried out in different ways depending on what is convenient as long as the rules above are fulfilled and the on-load tap-changer is filled with oil to the correct level with a gas cushion on the top. The method below is recommended and if it is followed in detail no pressure limits are exceeded and oil levels and gas cushion will be correct. If the on-load tap-changer consists of more than one unit, fill one at a time.

3.17.3 Filling at atmospheric pressure

See Fig. 10.

1. Close the air release valve
2. Open the conservator valve, if any.
3. Dismantle the breathing device on the conservator for the on-load tap-changer.
4. Pump oil into the diverter switch housing via the oil valve (connection dimensions, see the dimension drawing for the on-load tap-changer). Continue until the conservator is filled to the correct level at the actual temperature. See section 3.17.4. If there is more than one unit connected to the same conservator, fill all of them until the oil level indicator starts to move and fill up to the right level when filling the last unit.
5. Shut the oil valve and disconnect the pump.
6. Remount the breathing device. Make sure the connection to the breathing device is properly sealed.

3.17.4 Oil level

For correct oil level in the oil conservator, see the transformer documentation.

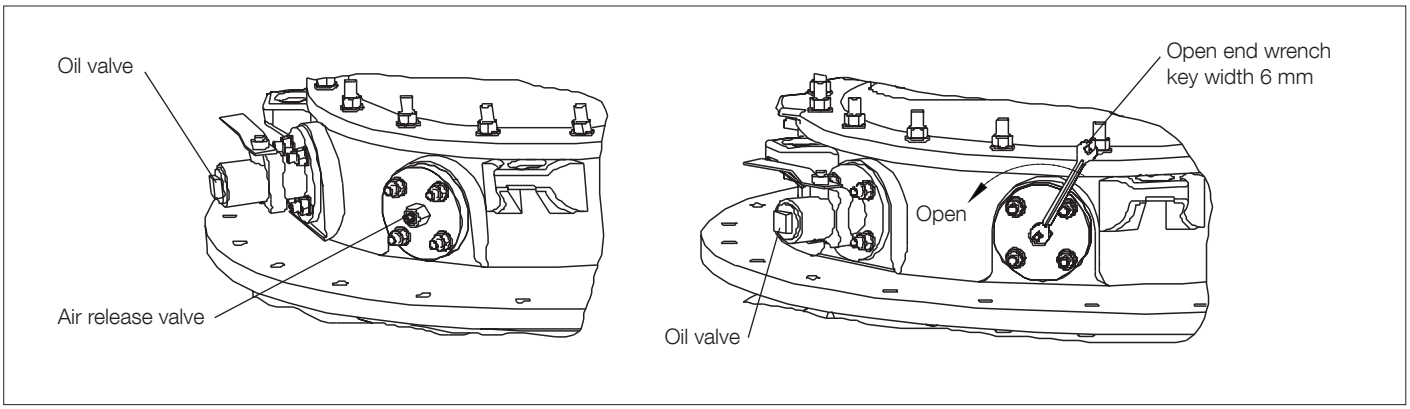

Fig. 10. Air release valve (position may be on another vertical flange).

3.17.5 Restoring the gas cushion

Check the oil level in the oil conservator one month after oil filling. If the oil level is lower now than when the oil filling was finished (correct for temperature differencies!) and no leakages are observed, the gas cushion has been solved in the oil and has to be restored.

The procedure below is used for on-load tap-changers without oil filter unit for continuous oil filtration. In case the on-load tap-changer is equipped with an oil filter unit for continuous oil filtration from ABB, and it is installed according to our recommendations, follow the instructions in the oil filter unit manual.

In case the on-load tap-changer consists of more than one unit, do the restoring in one unit at a time.

WARNING

The oil in the diverter switch housing may be hot. Be cautious!

WARNING

Before any work is carried out on the on-load tap-changer: Make sure that the transformer is disconnected and that earthing is properly carried out. Obtain a signed certificate from the engineer in charge.

CAUTION

To operate the on-load tap-changer with a too small or no gas cushion means a risk for a trip of the pressure relay.

Procedure

1. Close the valve in the tube to the conservator.
2. Connect the oil pump to the oil valve. (For connection dimensions, see the dimension drawing for the on-load tap-changer), see Fig. 10.
3. Open the oil valve and the air release valve.
4. Start the oil pump and drain approximately 25 litres of oil into a clean and dry container.
5. Close the air release valve.
6. Close the oil valve and disconnect the pump.
7. Connect the output side of the pump to the oil valve.
8. Open the oil valve.
9. Open the valve in the tube to the conservator!
10. Pump the earlier drained 25 litres of oil back into the diverter switch housing.
11. Close the oil valve and disconnect the pump.
12. The level in the oil conservator and the gas cushion are now restored.

If the on-load tap-changer consists of more than one unit, proceed with the other one until the last one has been restored.

CAUTION

Avoid to do the restoring in damp weather since moisture will get into the diverter switch housing. If the restoring has to be done in such weather, the incoming air has to be dehydrated and the drained oil protected from water.

3.17.6 Waiting period

CAUTION

Do not energize the transformer earlier than three hours after oil filling in atmospheric pressure. This waiting period is needed to allow airbubbles to disappear.

3.18 Check of contact timing

Checking the contact timing is a good check of the condition of the on-load tap-changer, but it is not necessary to check contact timing at every overhaul. It is recommended to be carried out after every 500 000 operations.

The test requires:

- Two indicator lamps (glow discharge lamps for the minimum possible magnetisation of the transformer)
- Necessary leads
- Two stiff insulated leads or bars

WARNING

Never force DC current through the transformer windings.

The insulated leads (or bars) are used for connection to the moving contact arms of the tap selector via the plug-in contacts of the diverter switch (They can be made of an insulating tube with a lead inside.)

Connect the lamps as shown in Fig. 11.

The diverter switch contacts are designated as shown in Fig. 12. Determine if x or v contacts are closed. In the contact-timing diagram for the on-load tap-changer you can find out the corresponding position. See Figs. 13 and 14.

The diverter switch housing shall be filled with transformer oil up to the fixed main contacts to secure the correct function of the dash pots during operation of the diverter switch, see section 3.17.

At repeated operations in the same direction the selector arms V and H operate every second time. When the direction of operation is reversed, the contact arms will be at rest during the first operation. The operation is then performed by means of the diverter switch only.

When testing, the operation must be carried out in the same direction as the previous operation.

The test is to be made on all three-phases and is to be carried out as follows:

Find the exact position of the on-load tap-changer by adjusting the disc brake as shown in the maintenance guide for motor-drive mechanisms.

1. Note the number of whole turns and parts of turns on the hand crank, during a slow manual operation.
2. Note when each tap-selector arm breaks and makes (the corresponding lamp goes out or lights).
3. Note when the diverter switch flicks over (a distinct sound is heard).

After this, compare the operations with the contact-timing diagram applicable to the on-load tap-changer in Figs. 13 and 14.

One operation corresponds to 25 turns of the hand crank on the motor-drive mechanism, type BUE and 15 turns for BUL.

Remove the equipment for contact-time measuring.

Mount the cover of the diverter switch housing according to section 3.13.

Complete the oil filling according to section 3.17.

CAUTION

If the result is beyond the limits given here, please contact ABB.

For BUE, the diverter switch must have switched over before the 20th turn is finished with the hand crank.

For BUL, the diverter switch must have switched over before the 12th turn is finished with the hand crank.

3.19 Putting into operation

Operate the on-load tap-changer to the position noted in section 3.3.1. Put the LOCAL/REMOTE switch to REMOTE. Reset the drag hands. Make sure that no tools or foreign objects are left in the motor-drive mechanism cabinet. Close the door. Make sure that nothing is left on the transformer cover.

Sign the revision protocol and give it to the engineer in charge and inform that the on-load tap-changer is ready for energizing.

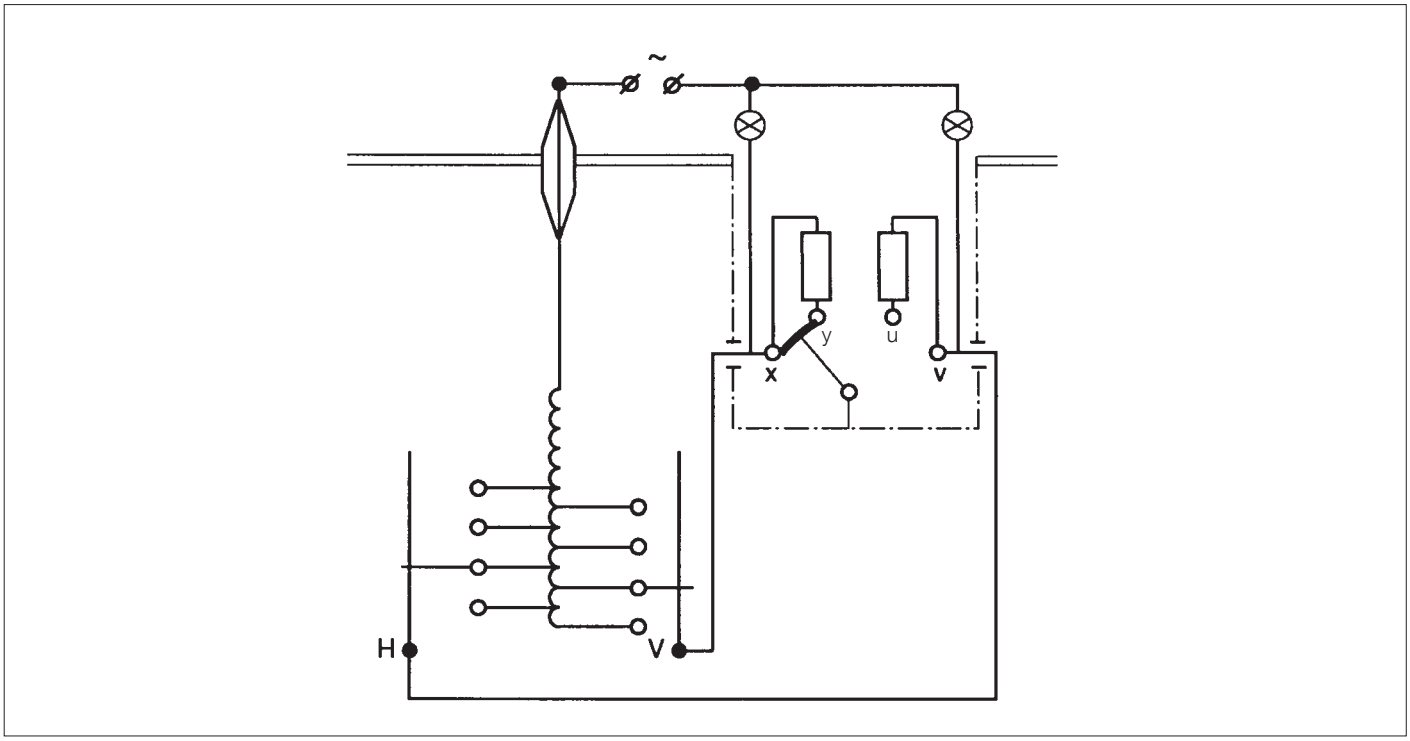

Fig. 11. Indicator lamp connection during contact timing test.

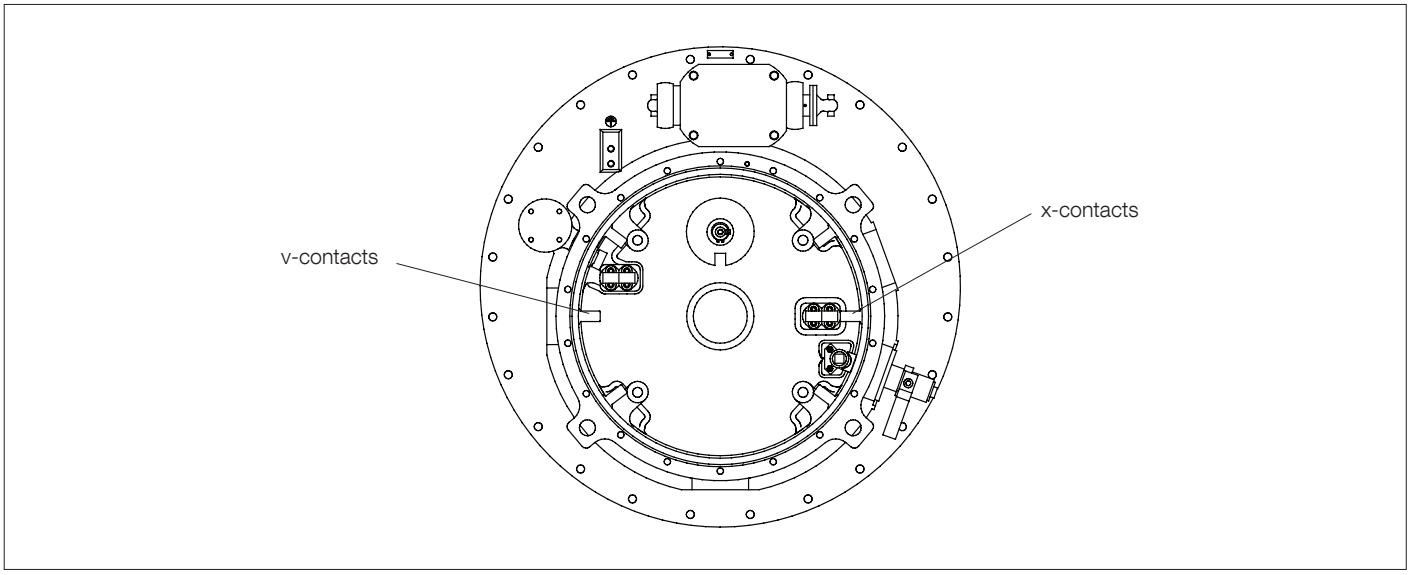

Fig. 12. The diverter switch outlet marking.

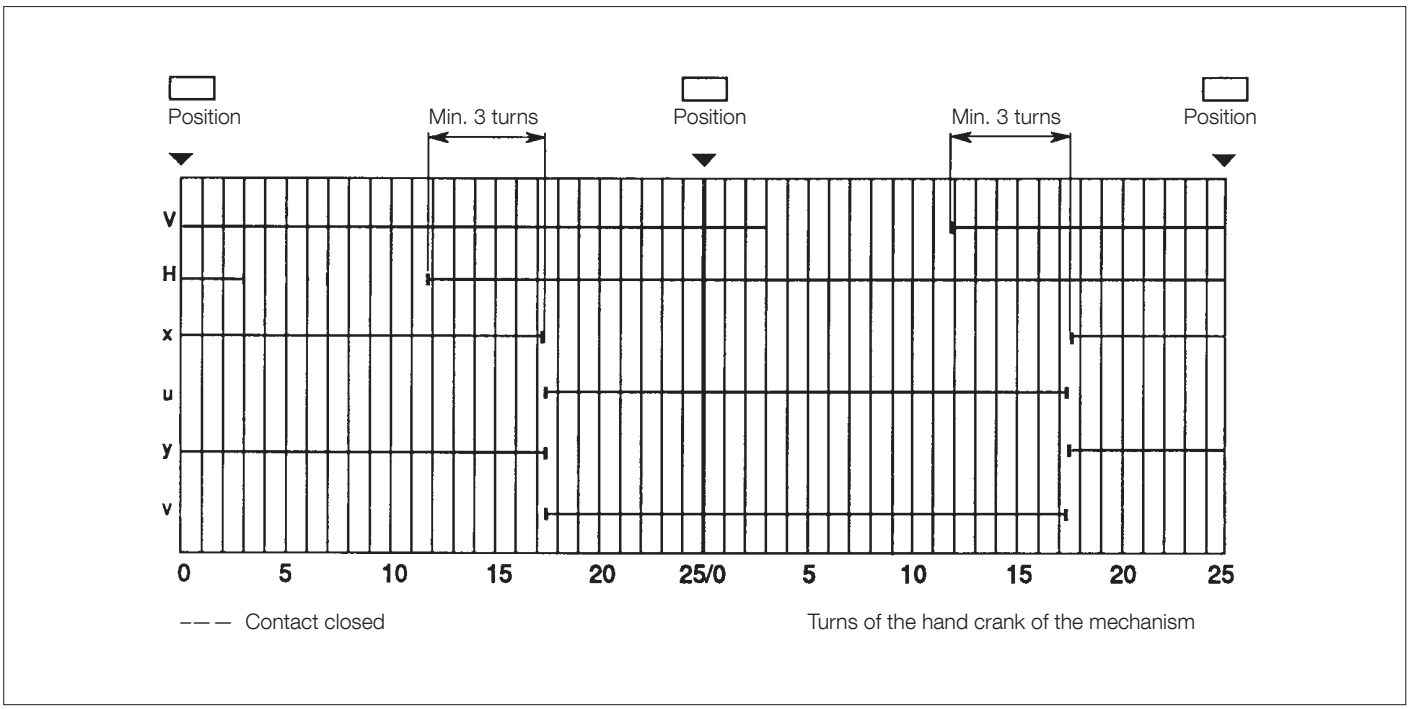

Fig. 13. Example of contact-timing diagram, BUE.

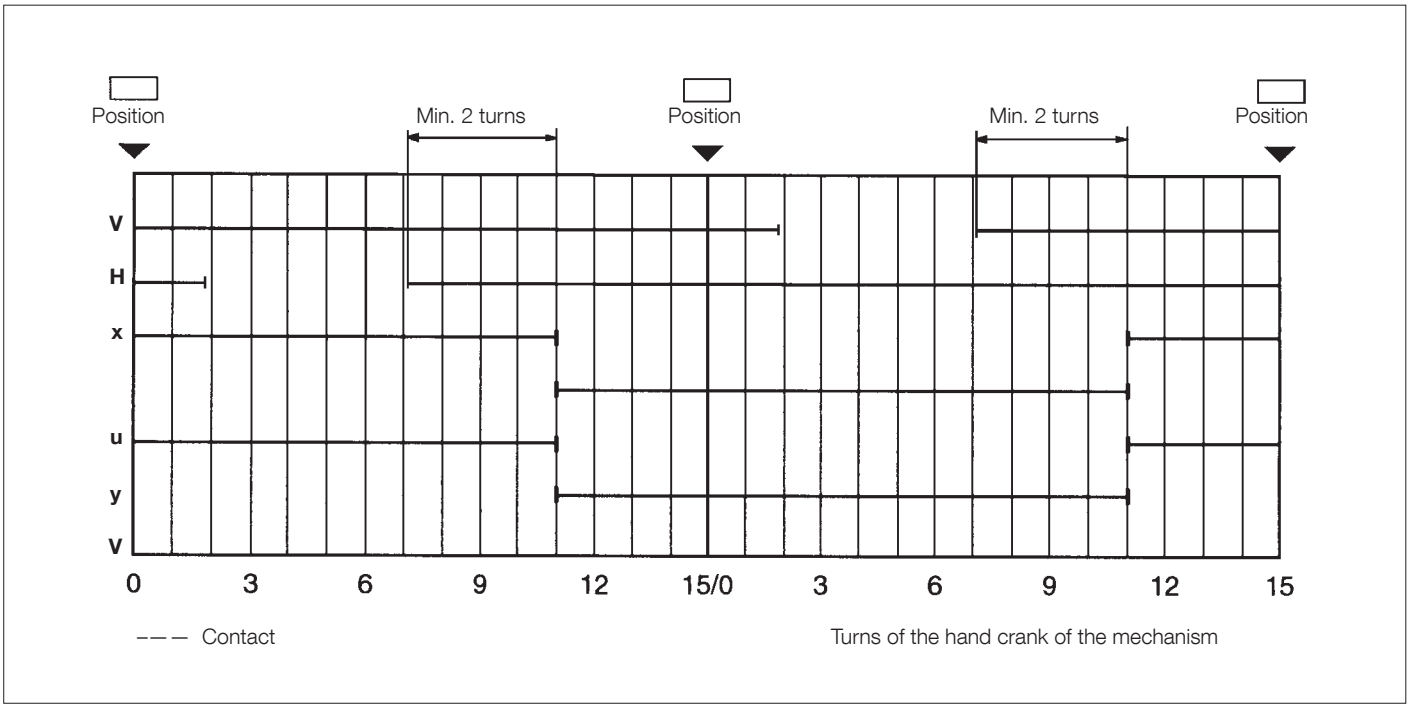

Fig. 14. Example of contact timing diagram, BUL.

4. Contact replacement

CAUTION

ABB recommends that only authorized personnel from ABB carry out contact replacement.

Replace worn-out main switching contacts and transition contacts as required. (It is not necessary to replace both main switching contacts and transition contacts if, for instance, only the main switching contacts are worn out).

CAUTION

Fixed contacts and its corresponding moving contacts should always be replaced at the same time.

Also replace contacts which are assumed to wear out before the next overhaul.

Replacement of contacts is described in the following sections.

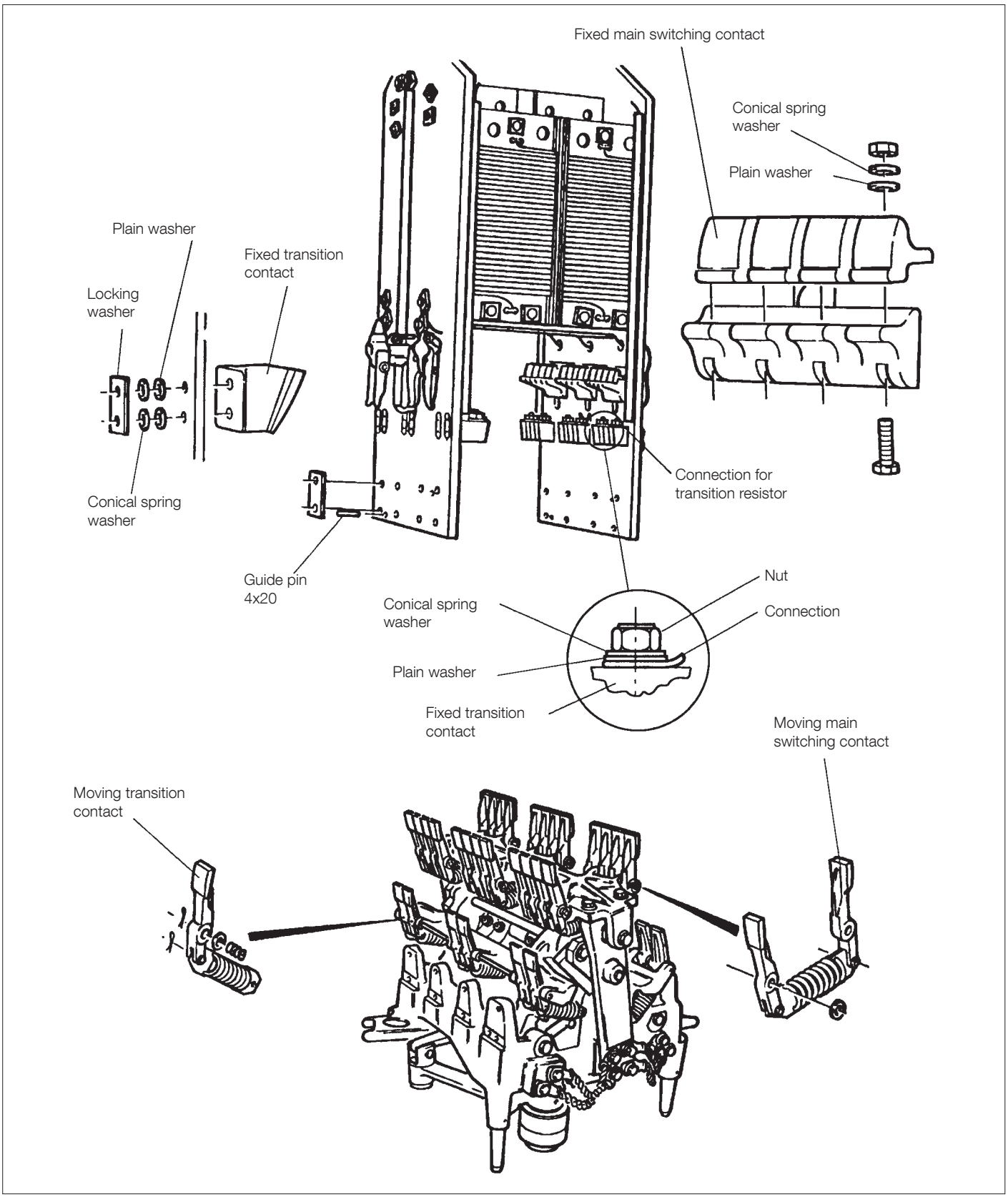

Fig. 15. Diverter switch, contact design.

4.1 Dismantling the boards

Dismantle the board from the frame by removing the eight screws and the washers from each board (Fig. 16).

Punch out the guide pins with a 4 mm mandrel. Note that the guide pins are placed different on the two boards in order to make the boards non-reversible.

When mounting, use new guiding pins.

Lift away the boards with fixed contacts and transition resistors from the contact mechanism (Fig. 17). The boards, which are made of insulating material, shall be wiped with rags.

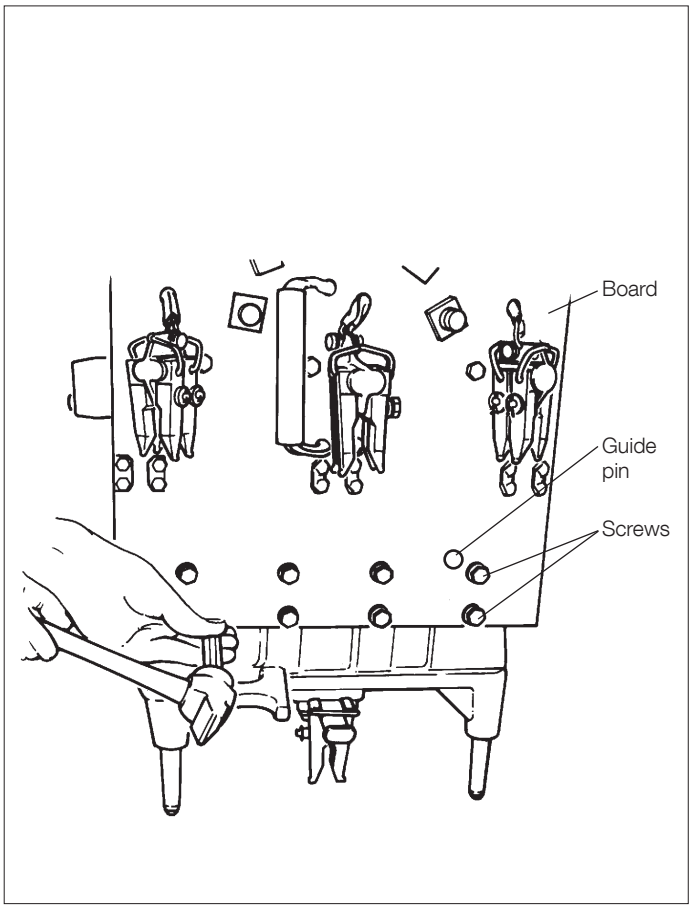

Fig. 16. Contact replacement, dismantling the boards.

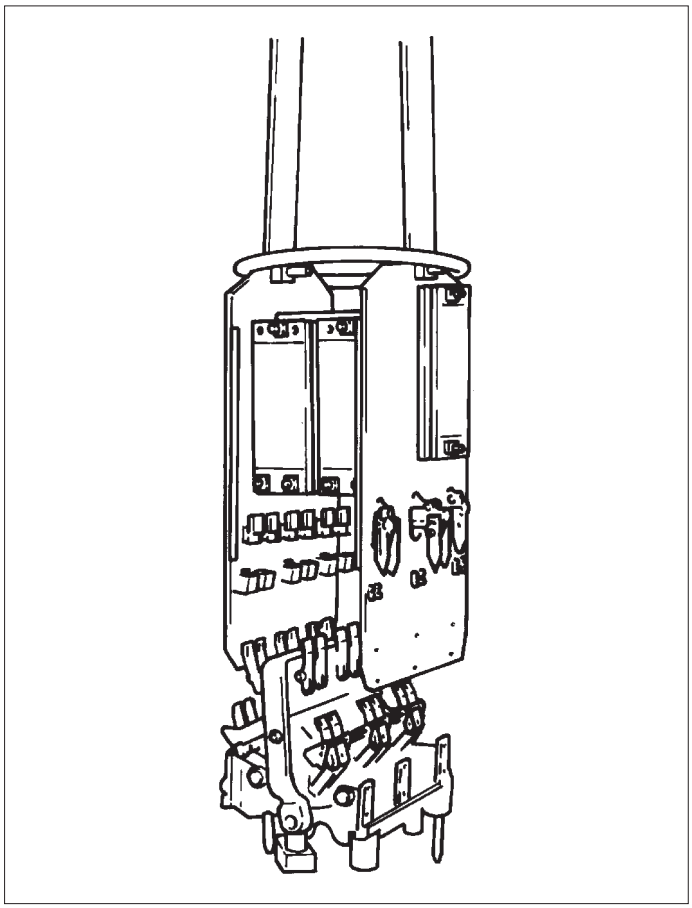

Fig. 17. Contact replacement, boards lifted away.

4.2 Dismantling the moving main contacts

Dismantle the moving main contact according to Fig. 18. Take away the split pins, washers and springs on both sides of one of the outer phases. Extract the shaft with a pair of pliers. Put your hand under the springs, washers and contacts to catch them (Fig. 19).

Do the same for the other outer phase.

The split pins, washers and springs are removed from both ends of the middle phase. Insert a 5 mm mandrel through the holes in one of the outer phases and punch out the shaft of the middle phase. Put your hand under the springs, washers and contacts to catch them when the mandrel is pulled out.

The shaft must remain in the outer phase until the new contacts are mounted.

Repeat the procedure for the contacts on the opposite side.

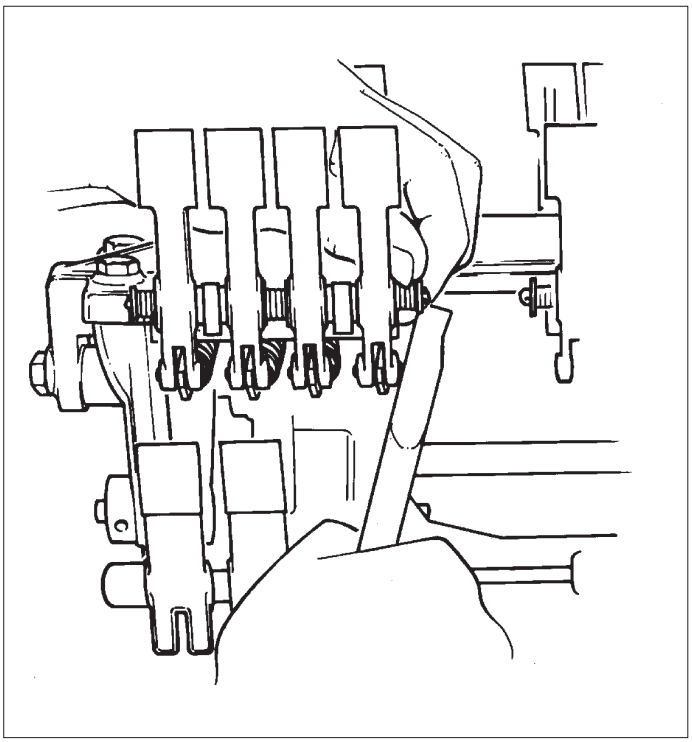

Fig. 18. Contact replacement, taking away split pins.

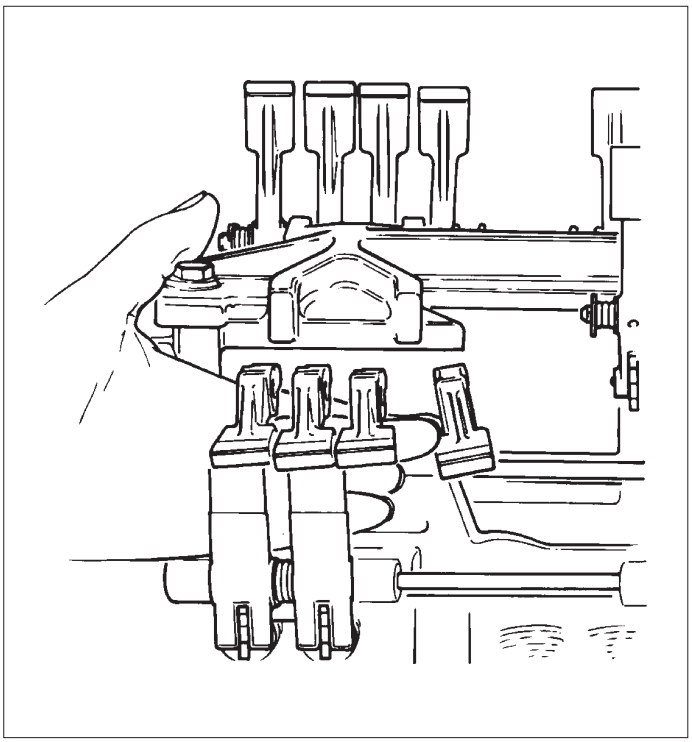

Fig. 19. Contact replacement, pulling out shaft.

4.3 Dismantling the moving transition contacts

Dismantling of the moving transition contacts should be carried out according to Figs. 20 and 21.

The transition contacts are held by a common shaft going through all the contacts.

The shaft is locked with two split pins (Fig. 21). Remove the split pins and punch out the shaft with a 5 mm mandrel of brass and take care of the springs, washers and contacts when the mandrel is pulled out.

The springs for the transition contacts are loosened in the following way:

Punch out the locking pin in one end of the pin with a 2 mm mandrel. Thereafter the spring holder can be loosened and the contacts with springs can be removed. Take care of the pin.

Repeat the above procedure on the other side of the diverter switch.

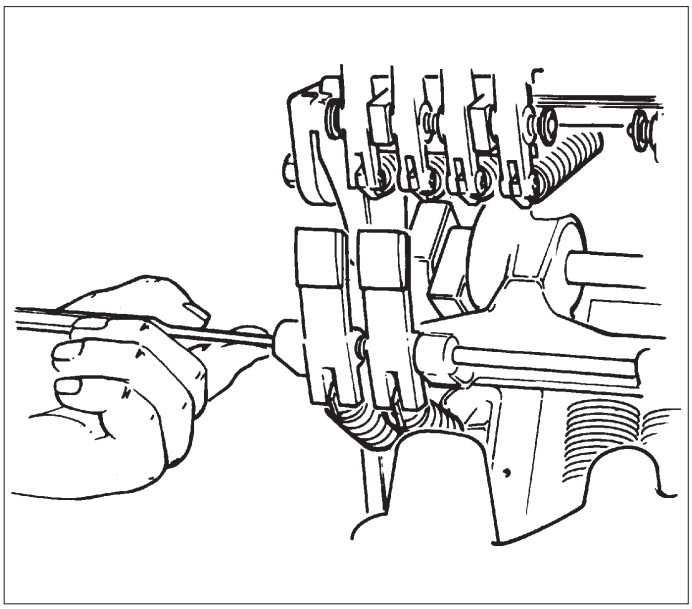

Fig. 20. Contact replacement, moving transition contacts.

4.4 Mounting the moving transition contacts

Mount the moving transition contacts according to Fig. 21.

A replacement contact consists of a contact with mounted spring. The washer of insulation material and the spring shall be mounted between the two contacts of each contact-pair. New springs and washers of insulation material are included in the spare contact kit.

When mounting, make a package of the contacts, spring and insulation washer for one phase. Press the package together and put it into position. Then push in the shaft. Take the next phase.

After mounting all of the so-called packages, secure the shaft with new split pins.

Mount the springs and lock with new split pins.

Put a ruler on the linings of the transition contacts. No lining should lie more than 1 mm from the ruler. If any lining does, adjust the corresponding contacts closer to the board by putting a 10 mm mandrel on the contact just beneath the hole for the shaft and punching with a hammer.

Do not punch too hard.

When all transition contact on both sides are mounted, make sure that the contacts move easily in the bearings and that the springs are functioning.

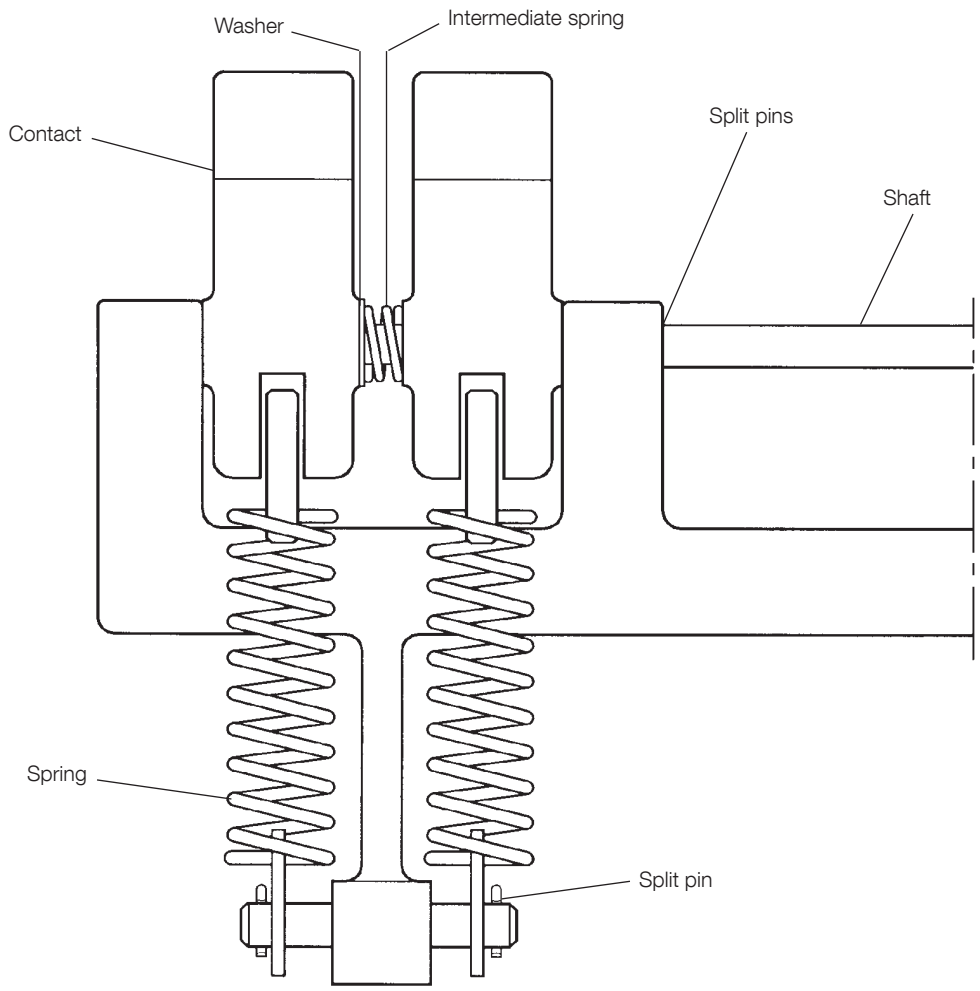

Fig. 21. Transition contact construction.

4.5 Mounting the moving main contacts

Figs. 22 and 23 show how to mount the moving main contact.

Fig. 22 shows the replacement contacts which consist of two contacts with a mounted spring.

Begin with mounting the middle phase. Mount the outer contact and the silver washer on the remaining shaft. Punch the shaft in through the bearing hole and mount a silver washer and a contact.

Insert a 5 mm mandrel from the other side through the outer and middle phases' holes and mount a contact and a silver washer on the mandrel. Punch the mandrel through the bearing hole and mount another silver washer and contact on the mandrel.

Make a package of the spring and the two insulating washers by pressing them together. Fit that package between the inner contacts. Then punch the shaft through.

At both ends of the shaft, first mount an insulating washer, then a spring and a steel washer. Lock with new split pins. Proceed with the other phases on this side like this:

Punch the shaft in through the bearing hole so much that a silver washer, a contact, an insulating washer and a spring is possible to put on the shaft. Put on these on the shaft and hold an insulating washer and a contact with your fingers with the holes aligned with the shaft and punch the shaft in until the contact is guided by the shaft. Press the outmost contact to overcome the spring force and put in the silver washer and punch the shaft through the bearing hole until the shaft is protruding equally from the two bearing holes.

Mount the outer contacts and the silver washers on the shaft as shown in Fig. 23. Also mount the insulating washers, the springs and the steel washers and lock with new split pins.

When all the contacts are mounted, check by lightly pressing them to assure that the bearings move easily and that the springs are functioning. Check that all containing details are correctly mounted.

Put a ruler on the linings of the moving main contacts. No lining should lie more than 1 mm from the ruler. If any lining does, adjust the contacts that deviate.

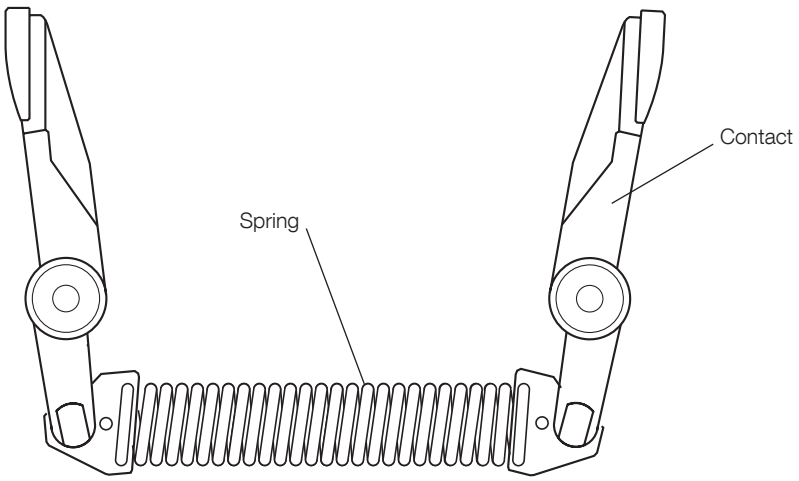

Fig. 22. Moving main contacts with tips of copper-tungsten, washers and springs.

To get the lining closer to the board, pull it backwards and then release the contact.

To get the linings further away from the board, pull up and hold the lining with a suitable tool (for example a piece of wood) and support it with your body and punch the contact from the back with a mandrel and a hammer.

Punch with gentle blows only. The contact is easily bent.

Proceed with the other side of the diverter switch.

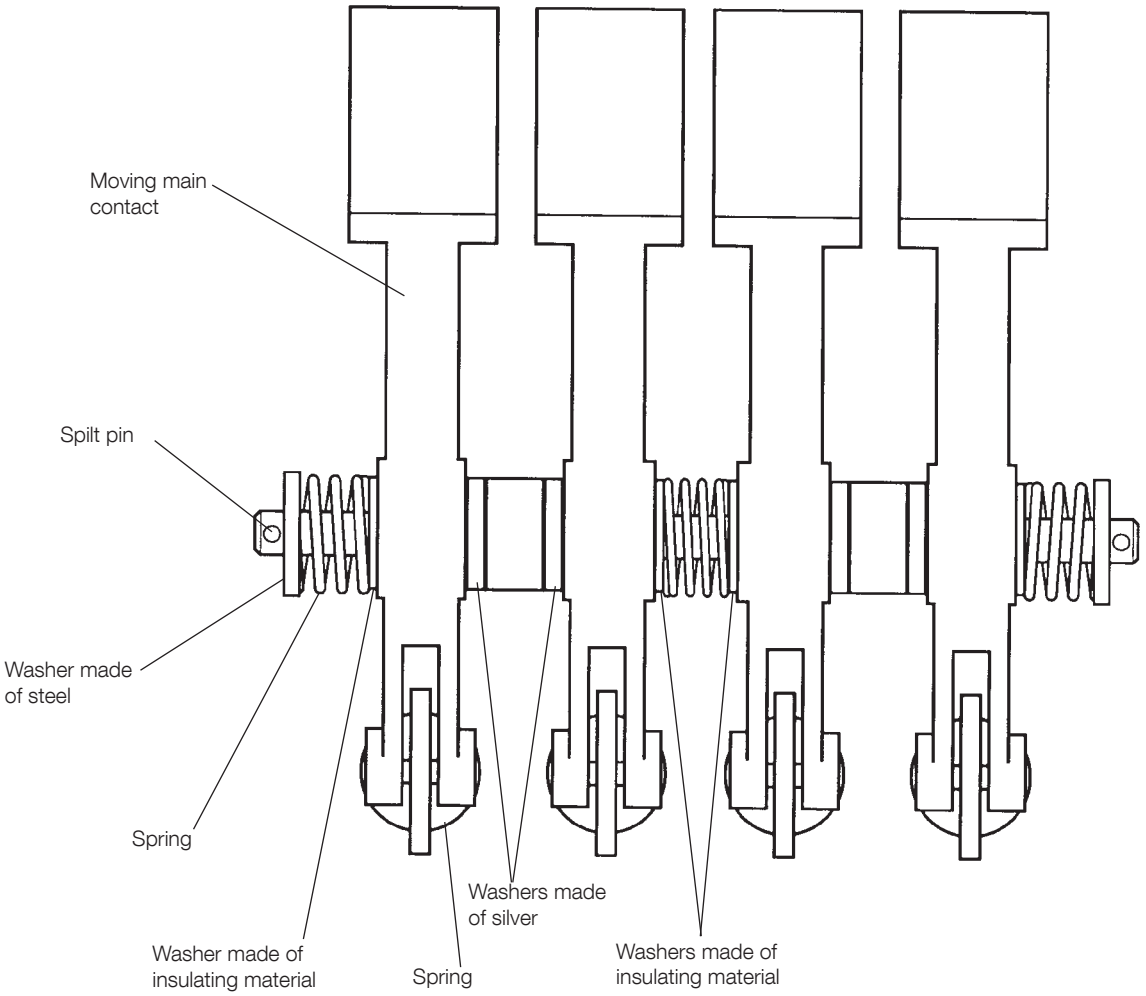

Fig. 23. Moving main contacts, washers and springs.

4.6 Replacing the fixed main contacts

Unscrew the fixed main contacts, see Fig. 15. Mount new contacts. Use new conical spring washers and locking nuts.

Put the washers as shown in the figure. Press the contacts against their bracket when tightening the screws. Tightening torque approximately 10 Nm, (not critical).

The conical end of the nut should be turned upwards.

4.7 Replacing the fixed transition contacts

Unscrew the screw and nut holding the connection for the transition resistors.

Unscrew the fixed transition contact. Mount new contacts.

Put the washers as shown in Fig. 15. Use new locking washers. Tighten the screws, tightening torque approximately 10 Nm.

Mount the connection for the transition resistors as shown in Fig. 26. Tightening torque approximately 10 Nm. Use new conical spring washers and locking nuts.

The conicial end of the nut should be turned upwards.

4.8 Mounting the boards with transition resistors and fixed contacts

To assemble the mechanism and the boards with transition resistors and fixed contacts, do as follows:

When the boards are lowered, put one side of the mechanism on an approximately 50 mm high piece of wood to make the fixed and moving contacts free from each other (Fig. 24).

Fix the boards with new guide pins (4x20 mm spring type straight pin slotted). Guide by inserting a 6 mm mandrel into an adjacent screw hole. Remove the mandrel and put in and tighten all screws. The plain washers should be closest to the boards.

Check that the linings of the fixed main contacts are aligned with the linings of the moving main contacts. If not, loosen the nuts slightly and adjust the fixed main contacts. Tighten the nuts.

Check (and adjust, if necessary) the alignment of the transition contacts as described for the main contacts. Tighten the screws and lock the locking washers.

Carry out the lining check on both sides of the diverter switch. Operate it by means of a pipe wrench.

WARNING

Take care to avoid finger injuries when operating the diverter switch.

Check (and adjust, if necessary) the tolerance as described in section 3.9. Operate the diverter switch and check that the contact movement is correct. Remount the diverter switch into the housing according to section 3.13.

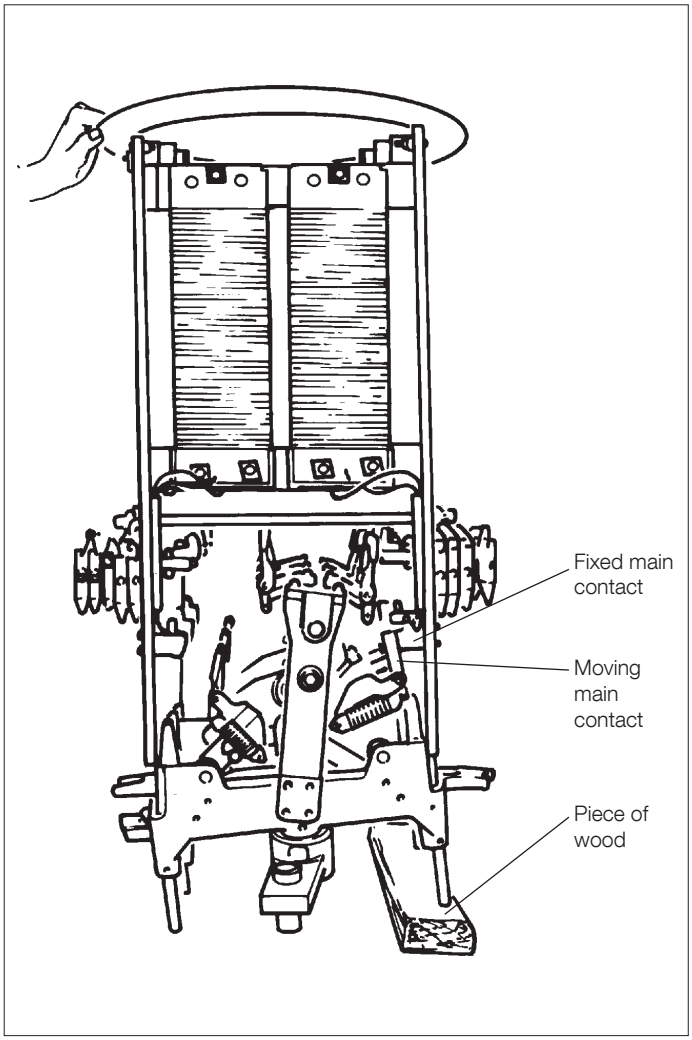

Fig. 24. Contact replacement, mounting the boards.

5. Specification of materials

5.1 General

On disposal of this product, it is recommended that local environmental regulations in each country are met. For environmental reasons, materials used are specified.

5.2 Diverter switch housing

Material	Approx. amount
Steel	40 kg
Aluminium	80 kg
Copper and alloys	10 kg
Epoxy resin	60 kg
Transformer oil	300 kg

5.3 Diverter switch

Material	Approx. amount
Steel	25 kg
Aluminium	10 kg
Copper and alloys	25 kg
Silver	50 g
Tungsten	1 kg
Polyester resin	20 kg
Presspan	1 kg

5.4 Tap selectors

Material	Tap selector III Approx. amount
Steel	10 kg
Aluminium	40 kg
Copper and alloys	50 kg
Silver	10 g
Polyester resin	10 kg
Epoxy resin	20 kg

5.5 Conductors

Material	Approx. amount
Copper	5–20 kg
Cellulose	

5.6 Gearing mechanism

Material	Approx. amount
Steel	15 kg
Copper and alloys	5 kg

5.7 Drive shaft systems

Material	Approx. amount
Steel	8 kg
Polyethylene	2 kg
Aluminium	2 kg
Brass	2 kg

CAUTION

Materials listed in the table above without any specification of amount are included because they may cause pollution problems during de-commissioning, even in the small quantities used.

Contact us

ABB AB
Components
SE-771 80 Ludvika, Sweden
Phone: +46 240 78 20 00
Fax: +46 240 121 57
E-Mail: sales@se.abb.com

www.abb.com/electricalcomponents

Power and productivity
for a better world™