Contents *Page*

1 FUNCTIONALITY INTRODUCTION 2

1 FUNCTIONALITY INTRODUCTION

The REx 5xx series protection, control and monitoring terminals employ the multiprocessor design to secure the best possible operational security and dependability. Besides this, the built-in main protection, control and monitoring functions are to a great extent independent of one another and they can be combined in different ways, so as to satisfy the customers' needs for different applications as best possible. To achieve this, different binary inputs of a terminal can be configured to different functions. Various functional output signals are programmable to one or several binary outputs, as well as to the different inputs of other protection and control functions.

Each of the terminals has basically a few main protection functions built-in. These functions determine their basic functionality, for example the distance protection function in REL 521, or the phase segregated line differential function in REL 561. Additional functions, such as directional or non-directional overcurrent earth-fault protection, autoreclosing function, etc., are available as options on special request.

The possible functional structure of each type of terminal within the REx 5xx family is described in details in the corresponding Buyer's Guide documents (documents 1MRK 5xx xxx-AB), and also presented for each delivered product separately in the corresponding documentation (terminal diagrams).

Each of the terminal related functions is described in details in the documents that follow this particular one. The description of each function tries to follow the same structure (where applicable):

- The application part states the most important reasons for the implementation of a particular protection function.
- The measuring principle gives a brief presentation of a measuring algorithm used for a particular function.
- The design presents a general conception of a function, together with a list of the setting parameters and different signals.
- The setting instructions refer mostly to different application areas and give directions for setting of the particular parameters.
- Testing describes primarily the necessary testing procedures and requirements for the testing equipment. The expected results of some functions are also presented.

The description of the design is based chiefly on simplified logical diagrams that use IEC symbols for the presentation of different functions, conditions, etc. The presentation of different signals differs slightly in connection with logical diagrams and functional block diagrams. All input and output signals in the functional connection diagrams are normally presented without frames, which are normally used in the simplified logical diagrams.

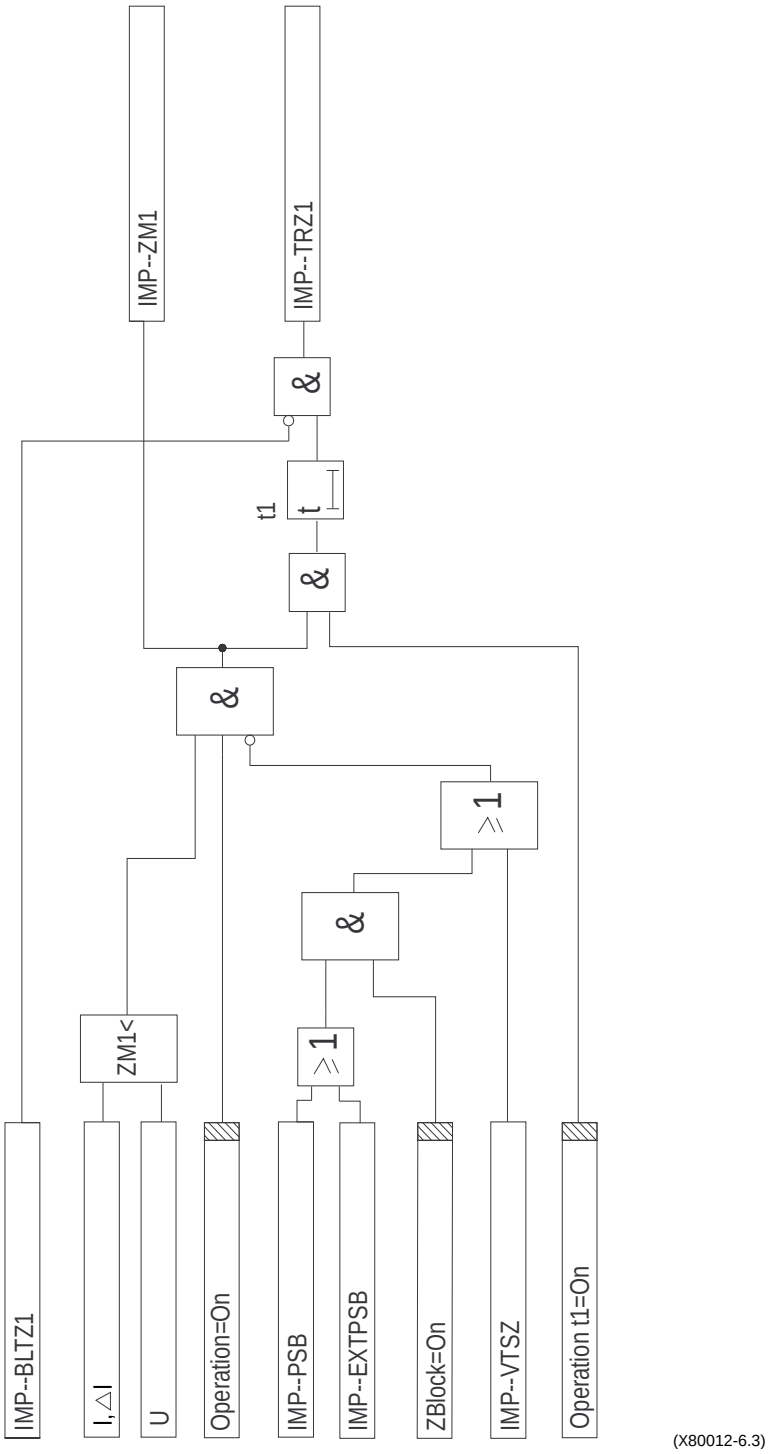

Fig. 1 Example of a simplified logical diagram for one function.

The names of the configurable logical signals consist of two parts. The first part of the signal name consists of up to four letters, and presents the abbreviated name for the corresponding function. The first and the second part of a signal name are divided by a dash. The second part of a signal name presents a functionality of a particular signal. According to this explanation, the meaning of the signal IMP--BLTZ1 in Fig. 1 is as follows:

- The first part of the signal, IMP- represents the adherence to the **IMP**edance measuring function.
- The second part of the signal name, BLTZ1 informs the user that the signal will **BL**ock the **T**ripping of **Z**one 1 of the impedance measuring function, when its value is equal to logical one.

Different binary signals have special symbols with the following significance:

- Frames with a shadowed area on their left side present functional input signals, which should be normally, but not absolutely necessarily, configured to the binary inputs of the 500-series terminals. Examples in Fig. 1 are signals IMP--BLTZ1 and IMP--EXTPSB.
- Frames with a shadowed area on their right side present the logical setting signals. Their values are equal to logical ones only when the corresponding setting parameter is set at the value specified within the frame. Examples in Fig. 1 are the signals Operation=On and ZBlock=On.
  These signals are not configurable. Their logical values correspond automatically to the selected setting value.
- The internal signals are normally produced within the digital signal processors and dedicated to a particular function. They are normally not available for configuration purposes. Examples in Fig. 1 are signals I, ΔI and U.
- The functional input signals are normally presented by ordinary frames. It is possible to configure them to functional output signals of other functions as well as to binary input terminals. Typical examples of functional input signals in Fig. 1 are signals IMP--PSB and IMP--VTSZ.
- The functional output signals (or production signals) normally present the logical outputs of different functions. They are available for configuration purposes. The user can configure them to binary outputs of the terminal or to different inputs of different functions (to the functional input signals). Typical examples in Fig. 1 are signals IMP--ZM1 and IMP--TRZ1.

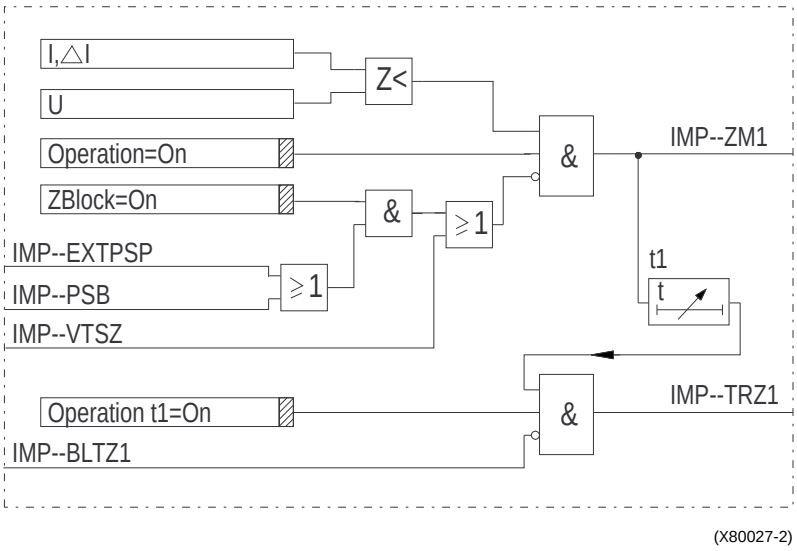

Fig. 2 Typical example of a functional connectional diagram.

Completely configurable binary inputs and outputs, functional inputs and outputs enable the user to prepare within the REx 5xx his own configuration of different functions according to application needs and standard practice. Each function also has a corresponding functional connection diagram, which presents a function as a closed block with the most important internal logical circuits and configurable functional inputs and outputs. Fig. 2 presents a typical functional connection diagram, which corresponds to the simplified block diagram of the function presented in Fig. 1.