Contents *Page*

1 BREAKER FAILURE PROTECTION 2

1.1 Application 2

1.2 Theory of operation 4
1.2.1 Input and output signals 5
1.2.2 Start functions 6
1.2.3 Measuring principles 6
1.2.4 Retrip functions 8
1.2.5 Back-up trip 8

1.3 Setting 9
1.3.1 Man machine interface (MMI) 9

1.4 Testing 9

1.5 Technical data 11

1.6 Appendix 12
1.6.1 Terminal diagrams 12
1.6.2 Signal list 13
1.6.3 Setting table 14

1 BREAKER FAILURE PROTECTION

1.1 Application

This function issues a back-up trip to adjacent circuit-breakers in case of a tripping failure of the circuit-breaker (CB), and clears the fault as requested by the object protection.

The breaker failure function is started by a protection trip command, e.g. from the line and busbar protection through the breaker related trip relays. The start can be single-phase or three-phase. Correct fault current clearing or failure is detected by a current check in each phase. The current level can be set at 0,1 to 2 times the rated current.

One can either choose to refrain from a retrip of the breaker, use it as an unconditional retrip, or as a retrip with a current check. A short delay, 0 – 150 ms, can be set for the retrip.

The use of retrip will limit the impact on the power system if the breaker failure protection function (BFP) should be started by mistake at testing or other maintenance work.

A second time step is used for the back-up trip command. It should be connected to trip the adjacent breakers, e.g. to clear the busbar section, and intertrip the opposite side of the object, if so required. The time setting range is 50 – 400 ms.

By using separate timers for each phase, correct timing at evolving faults is ensured.

The timer setting should be selected with a certain margin to allow for variation. The properties of the BFP function allow the use of a small margin.

Note: In order to get the trip indication (red led), the trip or backup trip signals have to be connected to the trip function.

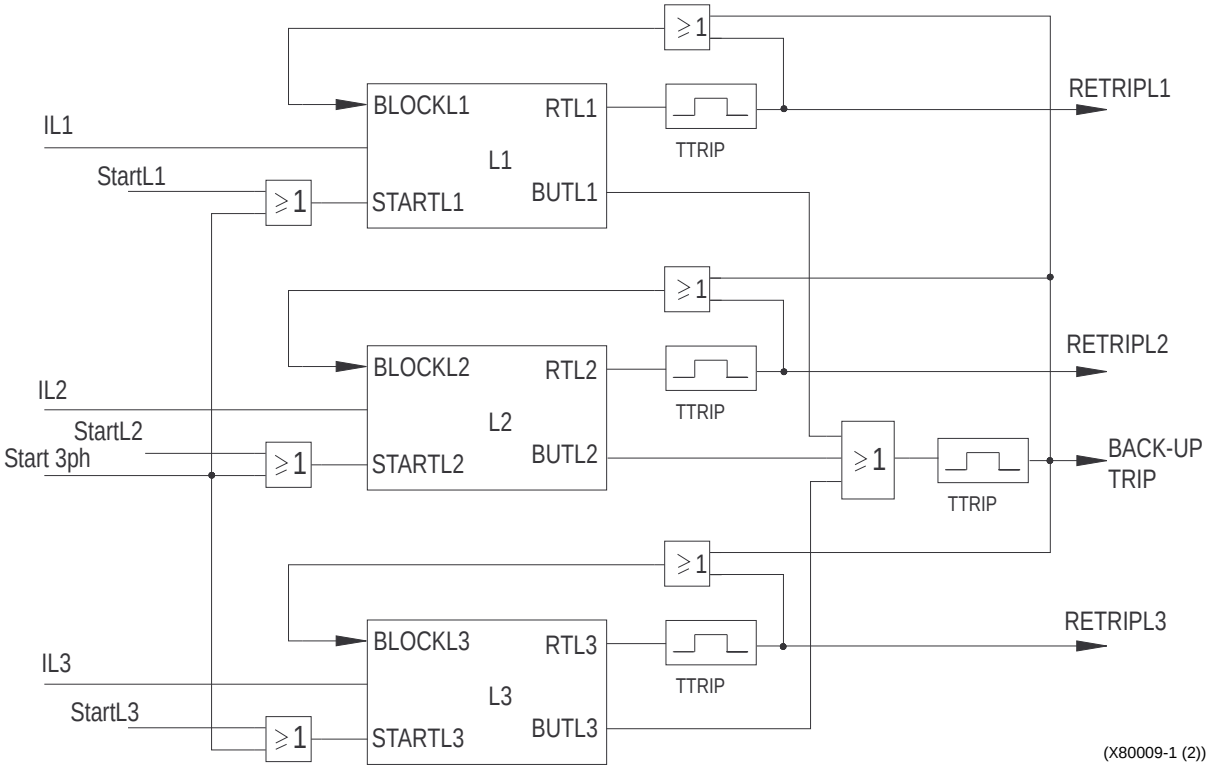

Fig. 1 Start and trip functions

The application features of the protection are

- Individual phase-current detection
- Two time steps, one for retrip of the related line CB, and one for the back-up trip of the adjacent circuit breakers.
- Selection of current controlled or unconditional retrip
- Phase separated timers - correct timing at an evolving fault
- Accurate timers and current elements reset in 10 ms, allowing the use of short back-up trip time.

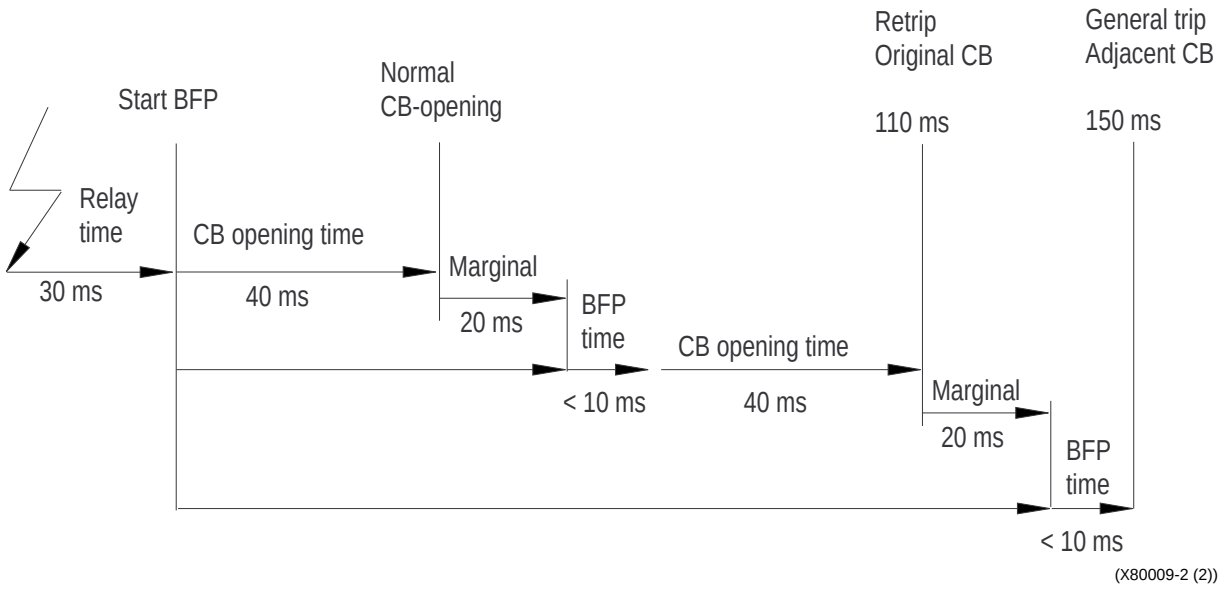

Fig. 2 Time sequence

1.2 Theory of operation

The breaker failure protection is started on a single-phase or three-phase basis, either from an external protection, or internally by a protection trip signal in the line protection.
The breaker receiving the original protection trip command can be retripped from the BFP. The retrip can be controlled by a current check, or carried out as a direct retrip without any current check. The direct retrip can be used without any inconvenience, since the breaker-to-trip has already received a tripping command, and the direct retrip does not cause any unselective tripping.
The use of retrip limits the extent of unwanted power disconnection in case of an accidental start of the BFP at work in the secondary wiring, with the primary circuit in service and the carrying load above the current setting level.

The back-up trip is sent to the adjacent circuit breaker in order to clear the fault and disconnect the failing circuit breaker.

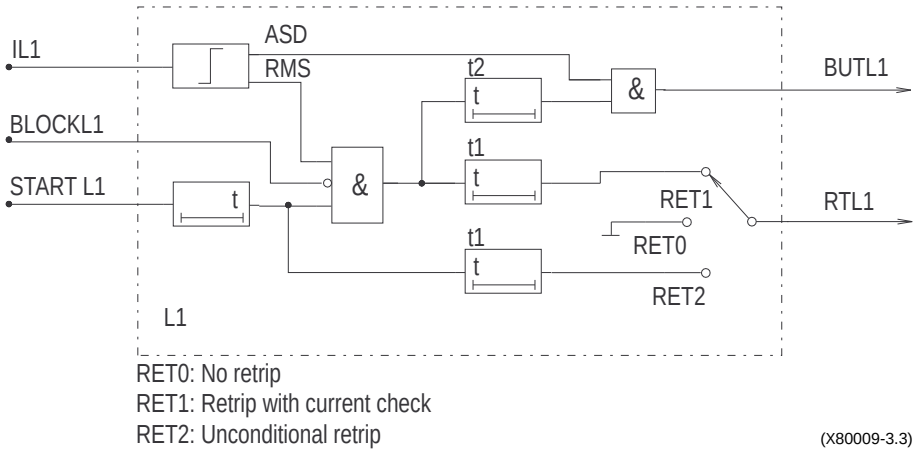

Fig. 3 Logic diagram of breaker failure protection

1.2.1 Input and output signals

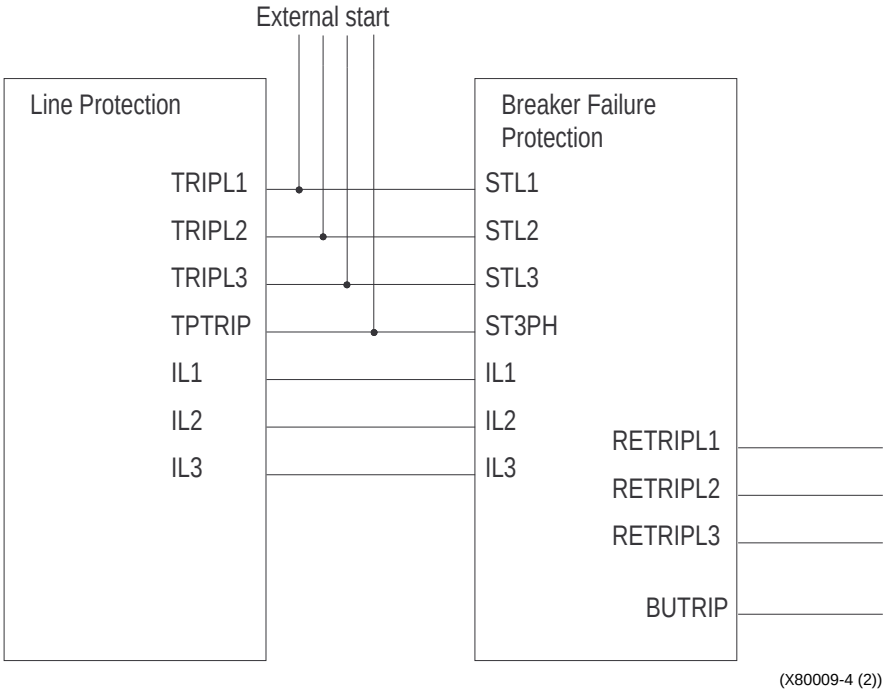

Fig. 4 Input and output signals

The so-called “connectable” inputs are connectable by configuration to the binary inputs (BIs) of the terminal or to other internal functions’ outputs. The outputs are connectable by configuration to the binary output relays. It is also possible to connect “connectables” and “outputs” to the free logic functions of the unit, e.g. OR gates, and in that way add connection links.

Input signals:

BFP-STL1	Start of breaker failure protection, phase L1
BFP-STL2	Start of breaker failure protection, phase L2
BFP-STL3	Start of breaker failure protection, phase L3
BFP-ST3PH	Start of breaker failure protection, three-phase start
IL1	Current input, phase L1
IL2	Current input, phase L2
IL3	Current input, phase L3

Output signals:

RETRIPL1	Retrip of original circuit breaker, phase L1
RETRIPL2	Retrip of original circuit breaker, phase L2
RETRIPL3	Retrip of original circuit breaker, phase L3
BUTRIP	Back-up trip of adjacent circuit breaker, three-phase

1.2.2 Start functions

The breaker failure protection can be started either internally or externally. The start pulse is sealed in as long as the current exceeds the preset current level. This function provides independence between the breaker failure protection and the autoreclosing function.
The preset current level may be set from (0,1 to 0,2) $\times I_n$ where I_n is 1 or 5 A.

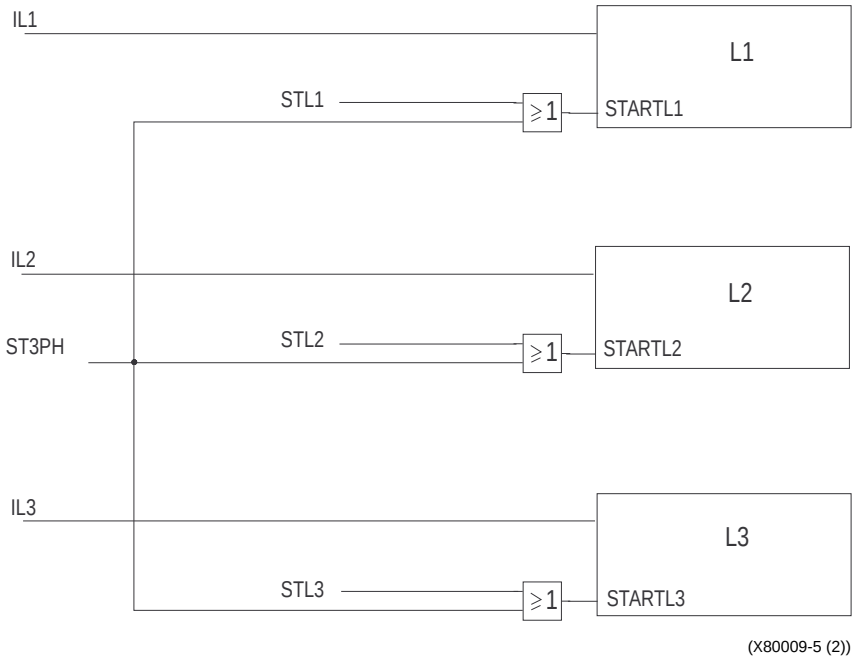

Fig. 5 Start functions.

1.2.3 Measuring principles

The current is filtered through a specially designed high-pass filter to obtain the required suppression of the dc components.

High-pass filtering is performed basically for the following two reasons:

- To remove, via filtering, any dc component caused by saturated current transformers with a decaying current due to de-energizing of the secondary circuit. This is done to achieve a more correct representation of the real current in the line.
- To remove, via filtering, any dc component that is a part of the fault current. This is done to achieve a correct base for both ASD (see below) and RMS calculations.

The frequency limit of the filter is very close to the service frequency, in order to obtain a maximum suppression of the above dc components.

The intention of the Adaptive Signal Detection, ASD, concept, is to achieve independence from the absolute filtering requirement, when dealing with extremely high fault currents in combination with low preset values. This is obtained by creating a new signal to compare the current with, the stabilising signal $I_{STAB.}$

The ASD works continuously, regardless of whether the BFP was started or not. Its result is, however, considered only when the BFP has started and the preset time has elapsed.

As the current exceeds the previously stabilised sample, it adapts the value of the current and when it does not, it decays exponentially. This adaptive behaviour makes it possible to rapidly and securely detect a breaker failure situation after the preset time.

Continuously and in parallel, the RMS-value of the post-filtered signal is calculated and compared with a preset current level. As the RMS value decreases below the preset current level, the breaker failure function is momentarily reset.

At normal operation of the circuit breaker, the stabilising signal exceeds the post-filtered signal for a consecutive period of maximally 10 ms before it is reset. Resetting takes place before the back-up trip timer t2 has timed out.

At a breaker failure situation, the post-filtered current exceeds the stabilising signal, resulting in a trip of the breaker failure function within 10 ms after the trip timer t2 has elapsed.

The breaker failure protection works with all three phases totally separated. There is, however, a possibility of starting all three phases simultaneously. The back-up trip is always a three-phase one.

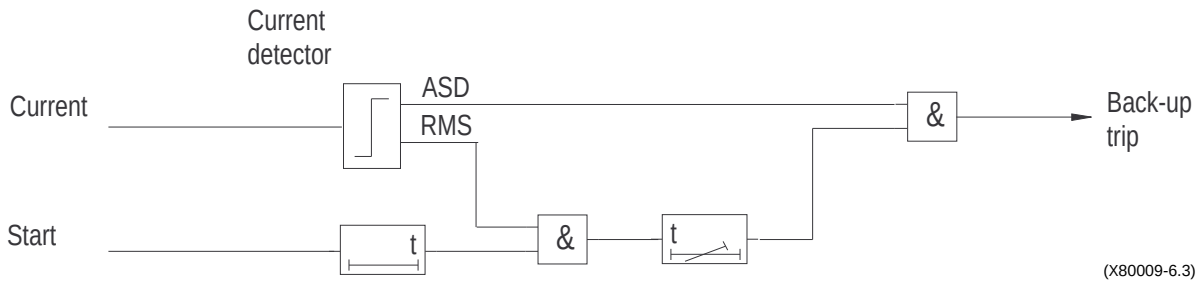

Fig. 6 Breaker failure protection.

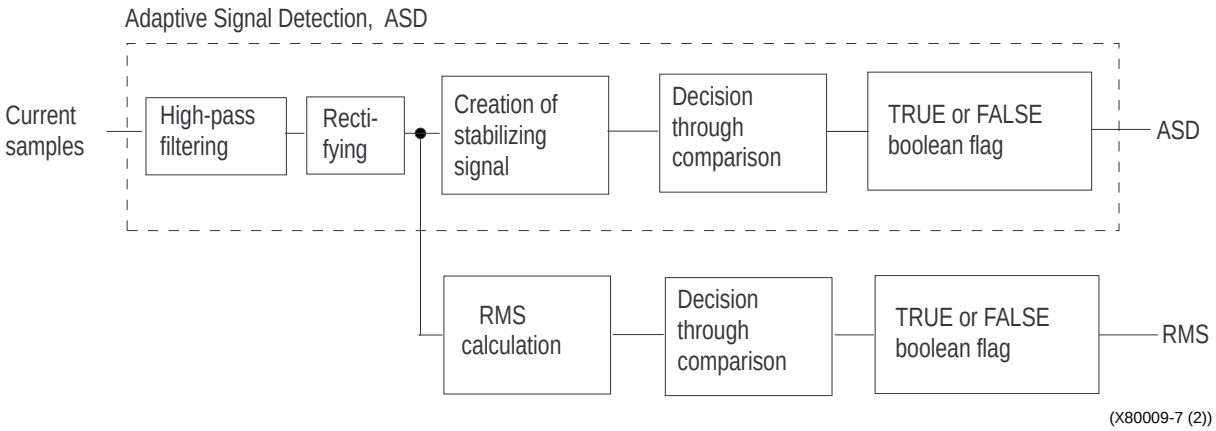

Fig. 7 Adaptive Signal Detection, ASD.

1.2.4 Retrip functions

The retrip function of the original circuit breaker is set at one of the following three options:

- Off — The retrip function is not executed
- I> check — The retrip takes place together with a current check.
- No I> check — The retrip takes place without a current check.

The retrip timer t1 can be set from 0 to 150 ms.

A trip pulse length of 150 ms is generated.

1.2.5 Back-up trip

The delay in starting the measurement for the back-up trip can be set anywhere between 50 and 400 ms.

A trip pulse length of 150 ms is generated.

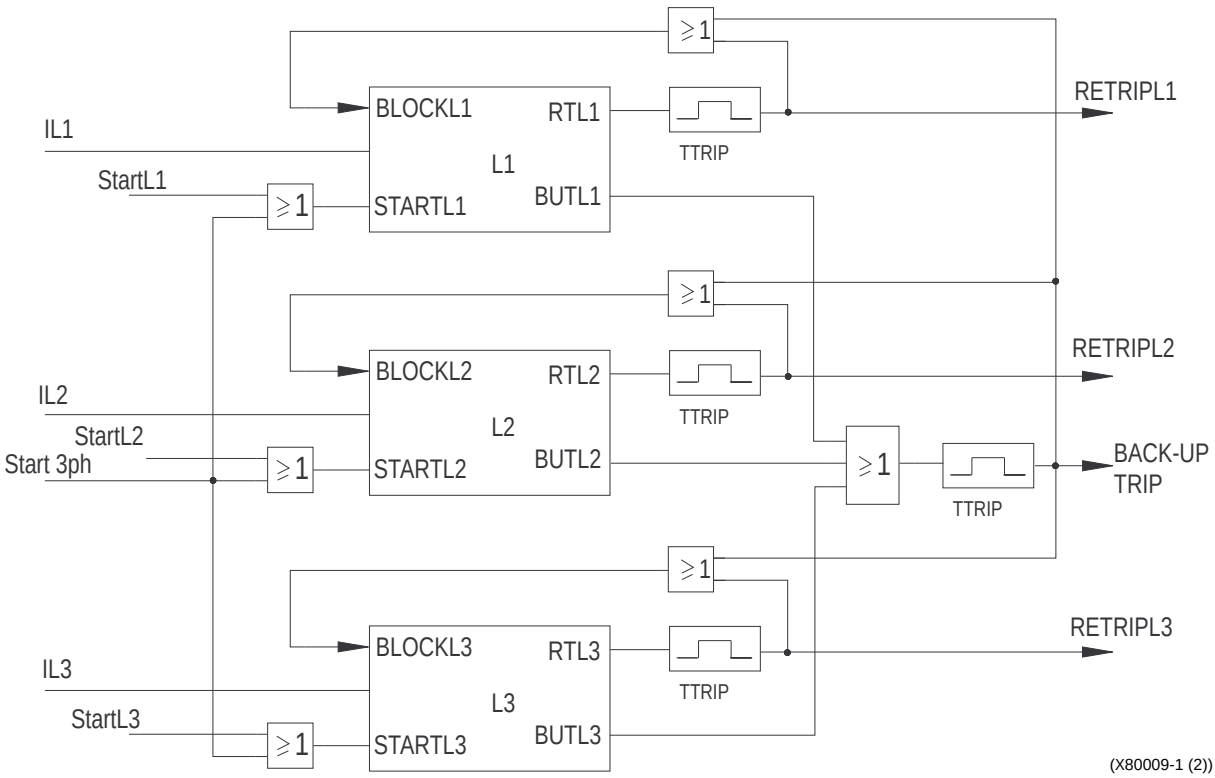

Fig. 8 Breaker failure protection.

1.3 Setting

1.3.1 Man machine interface (MMI)

The setting parameters are accessible via the MMI.

The configuration of alternatives or settings to the functions is made in the MMI:

Settings
Functions
Group n
Breaker Failure

The breaker failure protection can be controlled from the Man machine interface (MMI) by a parameter “Operation”, to be set between alternatives “Off” / “On”.

In the alternative “Off” mode, it is made inoperative.

The configuration of input and output signals to the function is made in the MMI:

Configuration
Function Inputs
Breaker Failure

The inputs to the breaker failure protection and outputs from the same are presented in the appendix.

Fixed values

Trip pulse, tp	150 ms, fixed

1.4 Testing

The breaker failure protection can be tested with this function, for instance at commissioning or after a changed configuration, in co-operation with some other functions, in particular the protection and trip functions.

The trip circuits to the breakers are opened at a test switch, or at connection terminals with links. A secondary injection relay test is used to operate the protection function.

Suggested testing procedure:

1 Preparations

1.1 Check the settings and the alternatives of the breaker failure protection (BFP).

The operation can be set at “Stand-by” (Off).

MMI branch:

Settings
Functions
Group n
Breaker Failure

If the settings are changed to speed up times during the tests, they must later be reset and verified.

2 Check that the protection does not trip when set passive.

2.1 Set Operation = Off

2.2 Apply a stationary current over set value.

2.3 Apply a start pulse to BFP--STL1.

2.4 Verify that neither retrip nor back-up trip is achieved.

3 Check that the protection can be started from all start inputs

3.1 Set RetripType = No I>check, I> = 100% I_r and t1 = 50 ms.

3.2 Apply a stationary 3-phase current over the set value.

3.3 Apply a start pulse to BFP--STL1.

3.4 Verify that retrip in phase L1 is achieved.

3.5 Apply a stationary current over the set value.

3.6 Apply a start pulse to BFP--ST3PH.

3.7 Verify that all three retrips are achieved.

4 Check that the retrip function works

4.1 No retrip function

4.1.1 Set RetripType = Retrip Off and I> = 100% I_r

4.1.2 Apply a stationary 3-phase current over the set value.

4.1.3 Apply a start pulse to BFP--STL1.

4.1.4 Verify that retrip in phase L1 is not achieved.

4.2 Retrip function with current check

4.2.1 Set RetripType = I> check, t1 = 100 ms and I> = 100% I_r .

4.2.2 Apply a stationary 3-phase current over the set value.

4.2.3 Apply a start pulse to BFP--STL1.

4.2.4 Verify that retrip is achieved.

4.3 Retrip function without current check

4.3.1 Set RetripType = No I> check, t1 = 100 ms and I> = 100% I_r .

4.3.2 Apply a stationary 3-phase current over the set value.

4.3.3 Apply a start pulse to BFP--STL1.

4.3.4 Verify that retrip is achieved.

5 Check that the back-up trip function works

5.1 Set RetripType = Retrip Off, t2 = 200 ms and I> = 100% I_r .

5.2 Apply a stationary 3-phase current over the set value.

5.3 Apply a start pulse to BFP--STL1.

5.4 Verify that back-up trip is achieved.

6 Terminate the test and restore the equipment to normal state

After the tests, restore the equipment to the normal or desired alternatives and settings!

Check especially:

- that the setting parameters reset as required and that a verification test has been made.
- the test switches or disconnected links of the connection terminals.
- the normal indications. (If preferred, the disturbance report can be cleared.)

1.5 Technical data

Table 1:

Function	Setting range
Operating current (one per phase)	(10-200)% of I_r in steps of 1%
Retrip time delay t1	(0-150) ms in steps of 1 ms
Back-up trip time delay t2	(50-400) ms in steps of 1 ms
	Value
Operate time for current detection	max 10 ms
Trip operate time	<18 ms

1.6 Appendix

1.6.1 Terminal diagrams

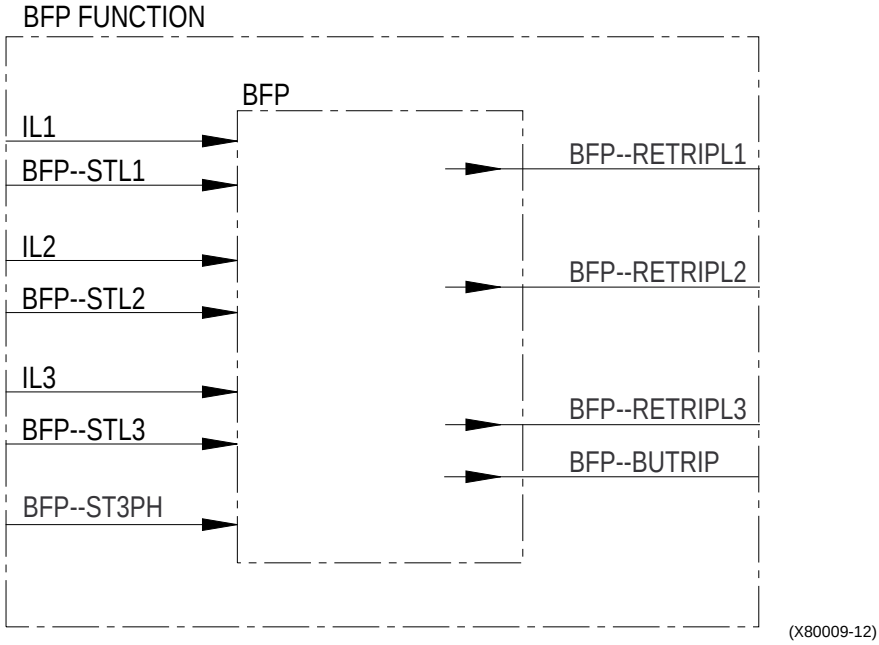

Fig. 9 Simplified terminal diagram of the function.

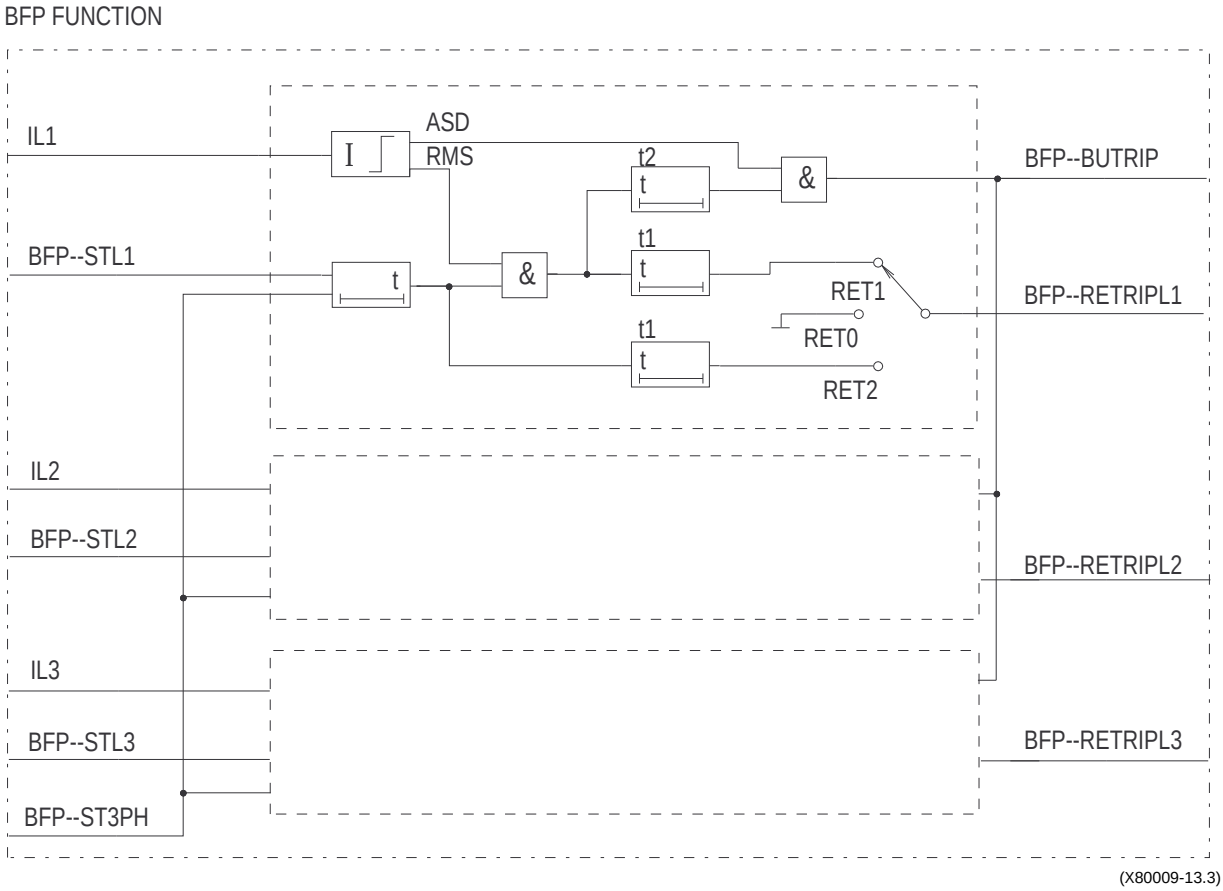

Fig. 10 Terminal diagrams for the function.

1.6.2 Signal list

CONNECTIONS:	TO:	SETTING:	DESCRIPTION:
BFP--STL1			Trip command L1
BFP--STL2			Trip command L2
BFP--STL3			Trip command L3
BFP--ST3PH			Trip command 3-phase
IMPORTS:	**ORIGIN:**	**SETTING:**	**DESCRIPTION:**
-	-		
PRODUCTION:	**TO:**	**SETTING:**	**DESCRIPTION:**
BFP--BUTRIP	BO		Send BF zone general trip
BFP--RETRIPL1	BO		Trip BFP phase L1
BFP--RETRIPL2	BO		Trip BFP phase L2
BFP--RETRIPL3	BO		Trip BFP phase L3

1.6.3 Setting table

PARAMETER:	SETTING RANGE:	SETTING ACTUAL				
		Group 1	Group 2	Group 3	Group 4	DESCRIPTION:
Operation	On / Off					Activation of the Breaker failure protection
I>	(10 - 200)% of I_r					Pick-up current level
t2	50 - 400 ms					Back-up time delay
RetripType	Retrip off I> check No I> check					Select type of retrip logic
t1	0 - 150 ms					Retrip time delay