Contents *Page*

1 POLE DISCORDANCE 2
1.1 Application 2
1.2 Theory of operation 2
1.3 Setting 4
1.4 Testing 5
1.4.1 General 5
1.4.2 Testing of the pole discordance protection 5
1.5 Technical data 6
1.6 Appendix 7
1.6.1 Terminal diagrams 7
1.6.2 Signal list 8
1.6.3 Setting table 9

1 POLE DISCORDANCE

1.1 Application

Pole discordance protection

Breaker pole position discordance can occur at the operation of a breaker with independent operating gears for the three poles. The reason may be an interruption in the closing or trip coil circuits, or a mechanical failure resulting in a stuck breaker pole. A disagreement caused by one pole failing to close or open can be tolerated for just a limited time, for instance as a single-phase-to-phase open time in connection with single-phase reclosing. The operation is based on checking the position of the breaker auxiliary contacts. Three parallel normally open contacts in series with three normally closed contacts in parallel of the respective breaker poles form a condition of pole disagreement, and can be connected to one input of REB 551. The binary input is named PDP--POLDISC. Together with an enable condition from the autorecloser that single-phase reclosing is not in progress and a short delay, this input initiates a three-phase trip operation. The connectable input is named PDP--BLOCK, and a signal on this input blocks the function.

In addition, there is also a parallel detection criterion based on current comparison in the breaker poles. This function is enabled just during a few seconds after the breaker has been given a closing or tripping command in order to avoid unwanted operation at unsymmetrical load in service.

1.2 Theory of operation

The logic diagram of the pole discordance function is shown in Fig. 1. The pole discordance function will operate when the connected auxiliary contacts of the circuit breaker gives an input signal to the PDP--POLEDISC input. This means that the one pole has failed to close or open. The PDP--BLOCK input is connected to the auto-recloser output SP1, which means that the pole discordance function is blocked during single-pole auto-reclosing. After the set time 0-5s, the output signal PDP--TRPD is high.

As a complement to the contact based function there is a current based function.The current measuring elements measure continuously three phase currents and compare them with the set values. If the current condition is fulfilled, meaning that the current is above 10% of the rated current in one phase and $< 80\% \times I_{max}$ in any other phase, the current based criterion will detect it. The current criteria, together with the signal PDP--GTRIP (general trip) and the absence of a block signal, PDP--BLOCK, will result in a trip output after the set time delay. A fulfilled current condition together with a manual close signal to the PDP--BC input also result in a PDP--TRIP.

In the standard configuration the connection PDP--BLOCK to AR---SP1 and the connection PDP--POLEDISC to a binary input is made. If the current condition should be used the configuration must be changed to configure the signals PDP--GTRIP and/or PDP--BC. When the current function is used, it is also recommended to test the function during commissioning in the used application in order to find the correct time setting.

I_{max}	=	Maximum phase current. The largest phase current must be higher than 10% of I_r .
IL1, IL2, IL3	=	Phase current

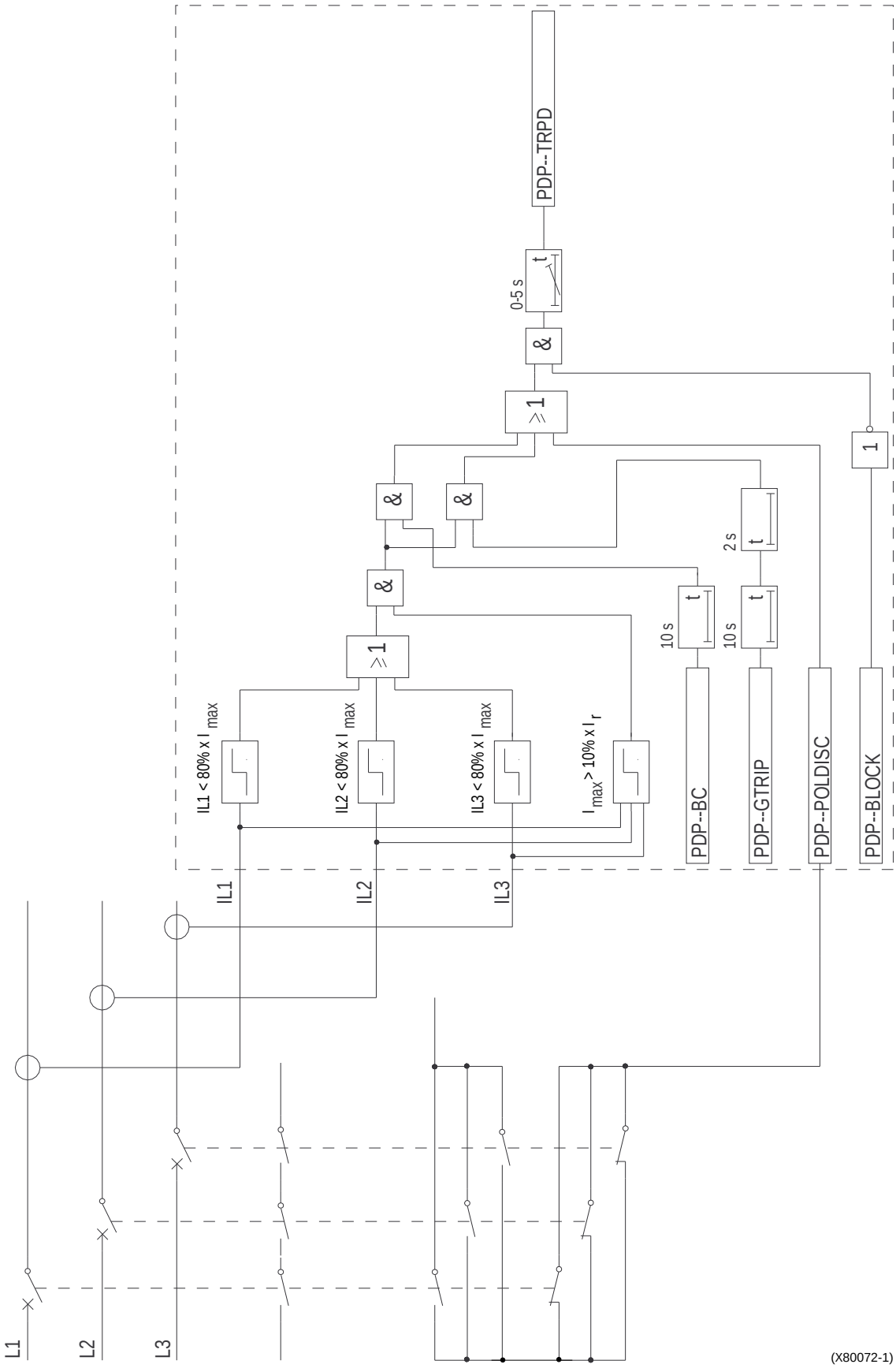

Fig. 1 Block diagram - Pole discordance

Input signals

PDP--GTRIP	General trip Connected to the TRIP-GTRIP signal from the tripping logic.
PDP--BLOCK	Block of pole discordance during single-phase autoreclosing
PDP--POLDISC	Pole discordance One NO contact from each phase connected in parallel, and in series with one NC contact from each phase connected in parallel.
PDP--BC	Breaker close. Connected to a manual close signal in the breaker close circuit.

Output signals

PDP--TRPD	Trip-pole discordance Indicates that the pole discordance protection has tripped. In the standard configuration it is connected to the trip unit.

1.3 Setting

The setting parameters are accessible through the MMI. The parameters for the pole discordance function are found in the MMI-tree under:

Settings
Functions
Group 1,2,3 and 4
PoleDiscord

The parameters and their setting ranges are shown in the appendix.

Comments regarding settings:

Operation: ON / OFF, of the function execution

Time delay, t: The time delay setting of the pole discordance trip output PDP---TRPD. The setting range is 0-5 s, in steps of 0.1 s. If the current function is used it is recommended to set the time delay at 4-5 s, depending on the application, in order for the unbalance to stabilize.

1.4 Testing

1.4.1 General

The operating values of the current measuring elements and corresponding functions have to be checked during the commissioning as well as during regular maintenance tests. ABB Relays recommends, although it does not absolutely request, the use of testing equipment of type RTS 21 (FREJA) for purposes of secondary injection testing.

The test equipment used should be capable of providing an independent three-phase supply of voltages and currents to the tested terminal. Furthermore, it must be possible to change the values of voltages, currents and phase angles between the measuring quantities, independent of each other, for each phase separately. The test voltages and currents should have a common source, with a very small content of higher harmonics.

1.4.2 Testing of the pole discordance protection

In the following tests settings are stated which can be used as a reference during testing, when final settings are not decided. After the tests the equipment should be restored to the normal or desired settings.

The following steps are necessary for the testing of the pole discordance protection:

1.1 Set the MMI according to below:

PoleDiscordance **Operation** = On
t = 0,0 s
BreakerFailure **Operation** = Off

1.2 Activate binary input PDP--BC. Apply one phase current at a time to the current input on REB 551 until the signal PDP--TRPD appears on the corresponding binary output, or on the local MMI unit. Measure the smallest operating value of the current measuring elements and compare it with the expected value.The expected current is 1% of the rated current I_r. If the rated current is 1 A, the expected value is 100 mA.

1.3 Activate binary input PDP--BC. Apply a symmetric three phase current of 200 mA time to the current input on REB 551. Decrease one current phase at a time until the signal PDP--TRPD appears on the corresponding binary output. Measure the operating value of the current measuring elements, and compare it with the expected value. The expected current is 80% $\times$ I_{max} . The expected value in this case is 160 mA.

1.4 Set the MMI according to below:

PoleDiscordance **Operation** = On
t = 0,5 s
BreakerFailure **Operation** = Off

Activate binary input PDP--BC. Apply a current of 200 mA to the current input IL1 and let IL2, IL3 = 0. Measure the operation time as from current surge until the signal PDP--TRPD appears on the corresponding binary output.

The expected time is 500 ms. Deactivate PDP--BC.

1.5 Technical data

Table 1: Pole discordance monitor

Function	Value
Auxiliary contact based function - time delay	0,5 s fixed
Current based function min. phase current Ibc min. unsymmetry	 10% of I_r 20% of max. phase current
Operation interval after closing	10 s
Release time after tripping	2 s
Operation interval after tripping	10 s

1.6 Appendix

1.6.1 Terminal diagrams

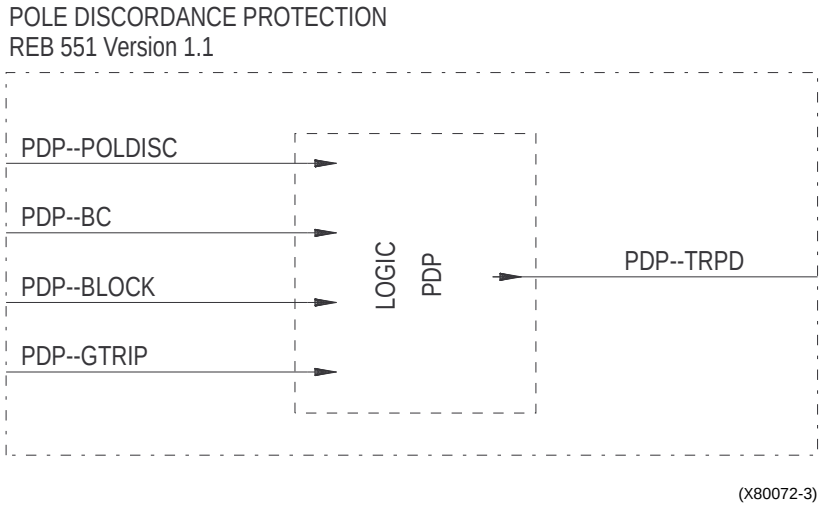

Fig. 2 Simplified terminal diagram of the function.

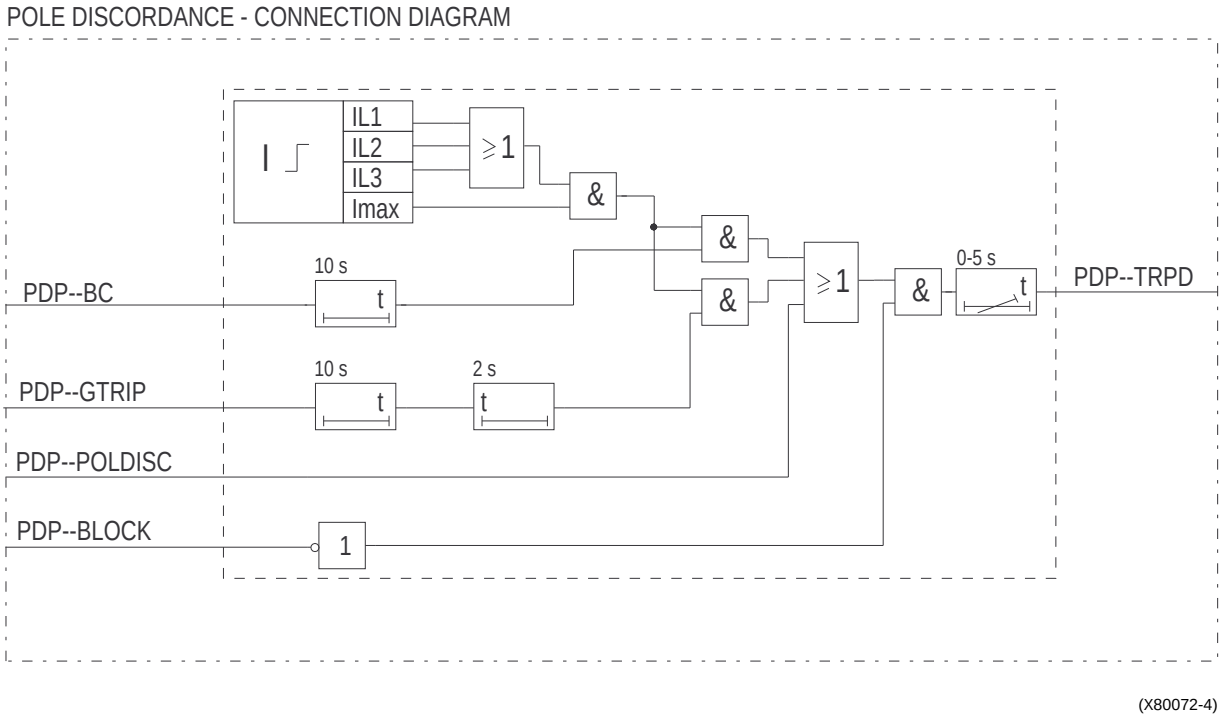

Fig. 3 Terminal diagram of the function.

1.6.2 Signal list

CONNECTIONS:	TO:	SETTING:	DESCRIPTION:
PDP--GTRIP	BI		Connected to the TRIP-GTRIP signal from the tripping logic
PDP--BLOCK	BI		Block of polediscordance during single-phase autoreclosing
PDP--POLDISC	BI		One No contact from each phase connected in parallel, and in series with one NC contact from each phase connected in parallel.
PDP--BC	BI		Connected to a manual breaker-close signal
PRODUCTION:	**TO:**	**SETTING:**	**DESCRIPTION:**
PDP--TRPD	BO,TRIP		Output signal from the pole discordance protection

1.6.3 Setting table

PARAMETER:	SETTING RANGE:	SETTING ACTUAL				
		Group 1	Group 2	Group 3	Group 4	DESCRIPTION:
Operation	Off / On					Function execution
Time delay t	0-5 s					Time delay setting of the pole-discordance trip output