## *Contents* *Page*

**1 LOCAL MAN MACHINE COMMUNICATION** ..... 2

**1.1 Local man machine interface unit - design** ..... 2
1.1.1 LEDs ..... 3
1.1.2 LCD ..... 3
1.1.3 Keys ..... 4

**1.2 Unattended man machine interface** ..... 4
1.2.1 Idle mode ..... 4
1.2.2 Reporting mode ..... 5

**1.3 Menu window and navigation within the menu tree** ..... 5

**1.4 Dialogue window** ..... 6
1.4.1 Dialogue window for the beginning of a communication ..... 6
1.4.2 Dialogue window for a command without selection ..... 7
1.4.3 Dialogue window for a command with a selection ..... 7
1.4.4 Dialogue window for a command with a cancellation ..... 8
1.4.5 Data window for a command with the selection and cancella-
tion 8

**1.5 Data window and navigation within the data branch** ..... 9
1.5.1 Reading and setting of different values ..... 10
1.5.2 Reading and setting of the enumerators ..... 11
1.5.3 Setting and reading of the strings ..... 12
1.5.4 Configuration and observation of the binary inputs ..... 13
1.5.5 Configuration and observation of the binary outputs ..... 13
1.5.6 Configuration and observation of the functional inputs ..... 15
1.5.7 Setting of an internal time ..... 16
1.5.8 Presentation of some additional information ..... 17
1.5.9 Saving the settings in a setting group ..... 17

# 1 LOCAL MAN MACHINE COMMUNICATION

The built-in man machine interface (MMI) unit serves for local communication between the user and the terminal.

Local communication is also made possible by means of a personal computer connected to the built-in MMI via special optical interface. This communication works in a similar way as the remote communication within the station monitoring system (SMS) and it is therefore described in the corresponding documents.

This chapter describes in detail the structure of a local MMI, the basic principles of a local man machine communication (MMC), and the basic structure of a menu tree as built into a terminal. Document 1MRK 580 016-XEN presents a menu tree for all REx 5xx-series terminals in detail.

## 1.1 Local man machine interface unit - design

Fig. 1 presents a local MMI unit. It consists of three light emitting diodes (LEDs), a liquid crystal display (LCD), six membrane push-button (hereafter called keys), and one optical connector that enables local man machine communication (MMC) with the aid of a personal computer (PC).

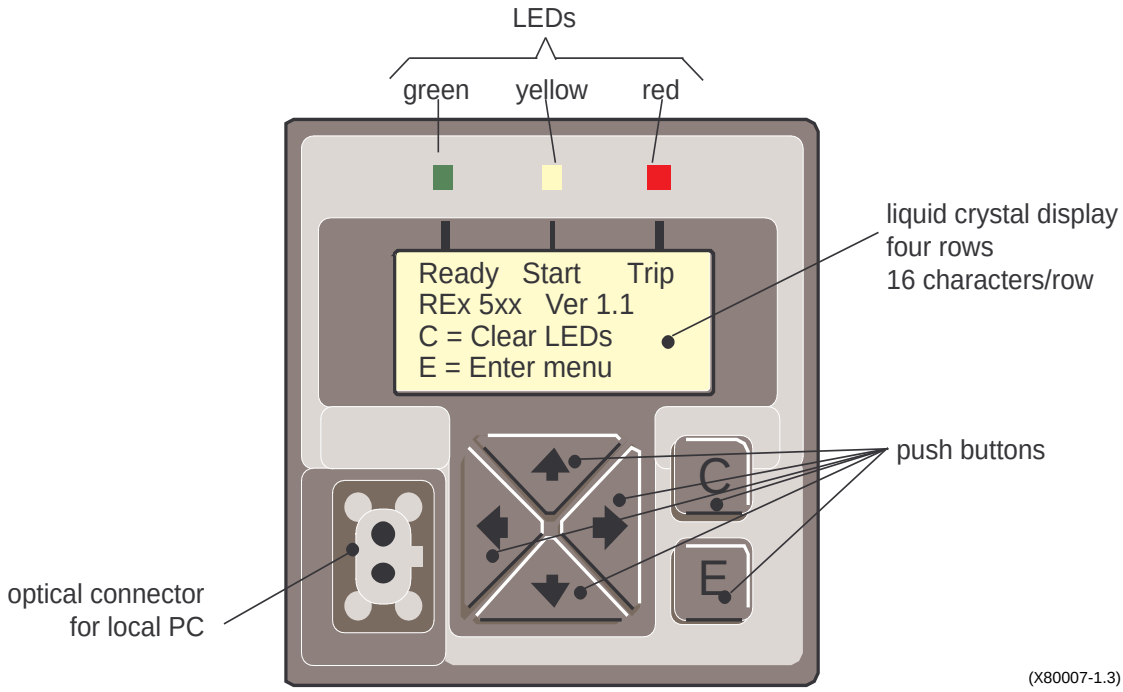


*Fig. 1 Local man machine interface unit.*

### 1.1.1 LEDs

Three LEDs provide the primary information on the status of a terminal. Each LED has a special function, which also depends on whether it is dark, has a steady light or a flashing light.

**Green LED, steady light** indicates the normal operating condition of a terminal.

**Green LED, flashing light** indicates that an internal fault has been detected within the terminal itself. It is possible to block a terminal or operate with a reduced functionality, depending on the type of fault and the internal configuration.

**Yellow LED, steady light** indicates that one or more disturbances has been recorded and stored in the terminal.

**Yellow LED, flashing light** indicates that the terminal is in testing mode. Values of the different setting parameters under the TEST mode will determine the operating mode of a disturbance recording function as well as complete terminal.

**Red LED, steady light** indicates that at least one of the protection functions has issued a trip command during a disturbance recording.

**Red LED, flashing light** indicates that the terminal is blocked by an internal or external command.

### 1.1.2 LCD

The LCD provides detailed information on the terminal. Normally, it is dark. Pressing any of the keys turns on the current status of all LEDs, and presents the type of terminal with its version, together with the instructions on how to proceed local communication with a terminal.

The LCD will shut down after leaving the menu tree or in case no key has been pressed for more than 45 minutes.

The disturbance summary (automatic scrolling of disturbance data for the last two disturbances) will be active if there is a disturbance report in a terminal which is not yet acknowledged.

Different types of information appear on an LCD within the so-called windows.

### 1.1.3 Keys

The number of keys used on the local MMI unit has been reduced to the minimum acceptable amount to make the communication as simple as possible for the user. The keys have normally more than one function, depending on where in the dialogue one is using them.

All keys have one function in common: when the LCD is in idle (dark, non active) mode, pressing any of them will result in activation of the LCD.

The **C key** has three main functions:

- When used together with the dialogue windows, it cancels the operation
- It provides an “exit” operation in a menu tree. This means that every pressing of the C key within the menu tree will result in stopping the current function or leaving the menu branch in question and moving one step higher in the menu tree.
- Clears LEDs when in an upper menu level.

The **E key** provides mainly an “Enter” function. It will activate the selected menu tree branch, confirm settings, different actions, etc.

The **left and right arrow keys** have two functions:

- to position the cursor in horizontal direction, for instance, to move between the digits in a number during the setting procedures for real values
- to move between the data windows within the same menu branch

The **up and down arrow keys** have three functions:

- to move between different menus within the menu and the dialogue windows
- to scroll the menu tree when it contains more branches than presented on the LCD
- to change the parameter values in the data windows during the setting procedure

## 1.2 Unattended man machine interface

When an MMI is unattended, two different cases may occur:

- normal operation with no reporting of a disturbance (idle mode)
- normal operation and reporting of a disturbance (reporting mode)

### 1.2.1 Idle mode

When the terminal is in normal operation after the latest disturbance has been acknowledged or with no disturbances stored in the memory, and no one has attended the MMI unit for more than 45 minutes, the green LED remains active. The yellow and red LEDs are dark and no text is shown on the LCD. The display is dark, with no light behind.

The LCD and LEDs will change their status when one of the keys is pressed, or when a new disturbance is stored into the terminal memory.

### 1.2.2 Reporting mode

When the terminal is in normal operation and the protection has operated since the latest reset of the indications, the MMI unit will have the following appearance:

- the green LED will be lit up
- the yellow and red LEDs will be lit up if conditions for their operation have occurred (start for yellow and trip for red LED)
- a disturbance summary for the last two disturbances will automatically scroll on the LCD.

## 1.3 Menu window and navigation within the menu tree

Fig. 2a presents a general configuration of a menu window, and Fig. 2b a typical example.

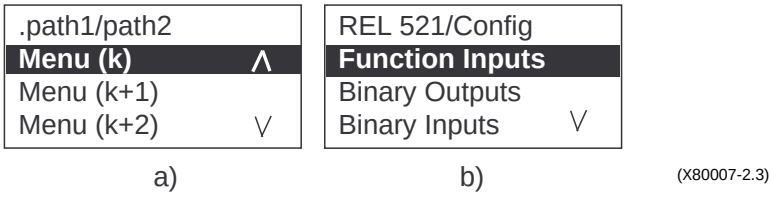


*Fig. 2 Menu window*

**The first row**. A dot at the beginning of the row always appears when the selected menu window does not represent the main menu. “path1” consists of up to 7 letters and states the name of the previous menu. “path2” consists of up to 7 letters and states the name of the active menu window.

The **second, third and fourth row**. Menus k, k + 1 and k + 2 appear in the three bottom rows. The cursor on one of them determines the path that can be activated by pressing the E key.

The up arrow will appear in row 2 when more menus are available before the k menu. The down arrow will appear in row 4 when more menus are available after the k + 2 menu. Changing the active path within the menu tree (moving the position of the cursor between the menus) can be obtained by pressing the up or down arrow key respectively one or several times.

The menu window will change into a new menu window or into a data window by pressing the E key once. In same case the paths in the first row will change in such a way that the old “path2” will now become a “path1” and the previous menu line with the cursor will then change into “path2”.

Fig. 2b shows a menu window that appears during the configuration procedure on the terminal. The configuration of function inputs will become possible by pressing the E key once, since this submenu appears marked as an active path by a cursor. The down arrow informs the user about the additional menus that are available for a configuration.

## 1.4 Dialogue window

Fig. 3 presents typical examples of the dialogue windows.

```
Ready    Start    Trip
RE. 5..  Ver. 1.1
C=Clear LEDs
E=Enter menu
```

a)

```
Ready    Start    Trip
RE. 5..  Ver. 1.1
C=Quit
E=Enter menu
```

b)

(X80007-3.3)

*Fig. 3 Dialogue windows*

The dialogue windows instruct the operator how to perform the actions defined by the text in the third and fourth rows. The first and second rows usually present a headline that brings more information to the user on the proposed action or the terminal itself.

There are five different dialogue windows within each terminal in the REx 500 series:

- dialogue window for the beginning of a communication with the terminal
- dialogue window for a command without a selection
- dialogue window for a command with a selection
- dialogue window for a command with a cancellation
- dialogue window for a command with the selection and cancellation

### 1.4.1 Dialogue window for the beginning of a communication

Fig. 3a and Fig. 3b present two typical dialogue windows for the beginning of a communication with the terminal. First, the user is given the possibility of either clearing the LEDs (by pressing the C key), or entering the menu tree (by pressing the E key). The user will enter the corresponding menu function with no need of any additional actions.

The text in the first row of the dialogue windows in Fig. 3a and Fig. 3b appears as an explanation of the LEDs located on the top of the LCD, when active.

## 1.4.2 Dialogue window for a command without selection

Fig. 4 represents typical example of dialogue window for command without selection. The instructions in the first two rows inform the user about the possible actions. “YES” and “NO” windows with the flashing cursor on one of them will appear in the last row. It is possible to move the cursor from one to another possibility by pressing the right or left button respectively. The user must, after taking the decision, confirm the same one by pressing once on E button.

(X80007-4.4)

*Fig. 4 Dialogue window for a command without selection.*

Positioning the cursor on “YES” window and pressing once on the “E” button confirms the instructions (commands) located in the first and second row.

Positioning the cursor on “NO” window and pressing once on the “E” button means leaving the dialogue window without considering any of the changes that have been performed during the communication within the particular menu tree. The same action will cause one press on the “C” button without any reference on the position of the cursor.

## 1.4.3 Dialogue window for a command with a selection

Fig. 5 represents a typical example of dialogue window for a command with a selection.

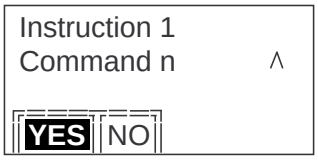


(X80007-5.4)

*Fig. 5 Dialogue window for a command with a selection.*

They are quite similar to the dialogue windows for commands without a selection, but with a possible selection of action in the second row, which is presented by the up or down arrow at the end of the row. The user can select a corresponding option by pressing once or more times on the up or down arrow, until the right selection appears in the second row. It is necessary to confirm or abandon the decision on the same way as under the dialogue window for a command without a selection.

## 1.4.4 Dialogue window for a command with a cancellation

Fig. 6 represents a typical dialogue window for a command with a cancellation. The instructions in the first two rows inform the user about the possible action. “YES”, “NO” and “CANCEL” windows with the flashing cursor on one of them will appear in the last row. It is possible to move the cursor from one to another possibility by pressing the right or left button respectively. The user must, after taking the decision, confirm the same one by pressing once on E button.

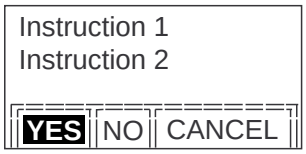


(X80007-16)

*Fig. 6 Dialogue window for a command with cancellation*

Positioning the cursor on “CANCEL” window and pressing once on the “E” button will return the terminal into the window, which has been present on the LCD before the dialogue window with cancellation has appeared.

## 1.4.5 Data window for a command with the selection and cancellation

Fig. 7 represents a typical example of dialogue window for a command with the selection and cancellation.

(X80007-17)

*Fig. 7 Dialogue window for a command with a selection.*

The window is quite similar to the dialogue windows for commands with a cancellation, but with a possible selection of action in the second row, which is presented by the up or down arrow at the end of the row. The user can select a corresponding option by pressing once or more times on the up or down arrow, until the right selection appears in the second row. It is necessary to confirm or abandon the decision on the same way as under the dialogue window for a command with a cancellation.

## 1.5 Data window and navigation within the data branch

The activities that can be performed within the data windows and branches are:

- reading of different information, and
- setting and configuration activities

Fig. 8a presents a general configuration of a data window, and Fig. 8b a typical example of the same kind of window.

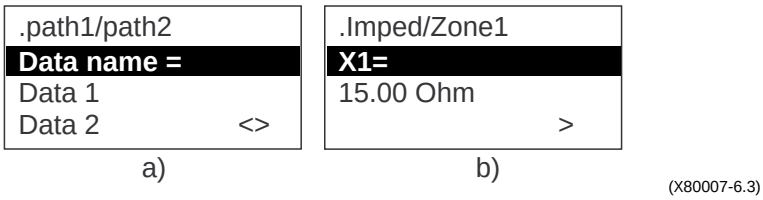


*Fig. 8 Data window.*

The **first row** is the same as that in the menu window.
The **second row** presents the name of a variable or parameter.
The **third and fourth row** give the first and second information on the value of the variable or parameter.

The left arrow in the fourth row informs the user that more data is available in the same menu branch. It is possible to reach it by pressing the left arrow key once or several times. The same is valid for the right arrow.

Fig. 8b represents the data window that appears on the LCD during the setting procedure for Zone 1 of the distance protection. There is only one value relevant for the impedance (X1 = 15,00 Ohms). The right arrow informs about additional data available for Zone 1 (reach in resistive direction, time delay, etc.).

## 1.5.1 Reading and setting of different values

The setting procedure for the setting of different values is identical for all different types of variables. Fig. 9 presents, in graphic form, a typical example of such a procedure.

The first data window for a specific variable or parameter shows both the previous menu and the present one, this to inform the user about the position in the complete menu tree. The name of a parameter has a flashing background, indicating the possibility of entering the value by pressing the E key once. This way, a transition from Fig. 9a to Fig. 9b takes place. The present value of the parameter appears in the third row of the first data window together with the corresponding unit.

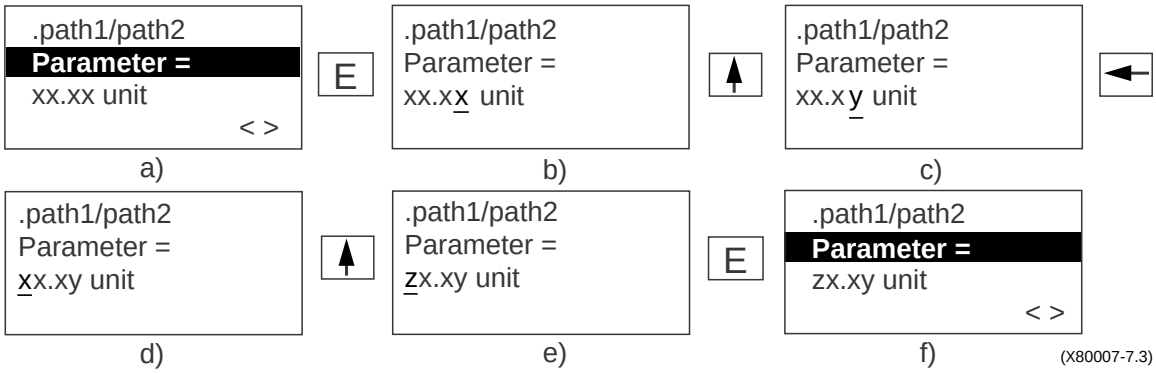


*Fig. 9 Example of a setting procedure for a real value of a variable.*

The last digit of a number (value) in the second window has a cursor that indicates the possibility of changing its present value. This is made possible by pressing the up arrow key (increasing) or down arrow key (decreasing). Pressing once will change the digit for one unit. Continuous pressing of the key will result in continuous increasing (decreasing) of the number until the key has been released.

Moving between different digits is made possible by using the left and right arrow keys (see Fig. 9c and Fig. 9d). The digit that can be changed by the up or down arrow keys always has a cursor.

It is necessary to confirm the new value of a parameter or variable by pressing the E key one or several times. The parameter window will now change to the one presented in Fig. 9f, with a cursor on the name of parameter, as at the beginning of the procedure.

**Important!**
It is necessary to note that the new value of the variable does not appear immediately in the corresponding setting group, due to the fact that all setting procedures take place in a separate editing area. New setting values for a particular setting group will become active after the user has left the editing area and saved all settings in one of four groups of setting parameters. This can be done only by using the command procedure with the selection and cancellation. See chapter “Saving the settings in a setting group”.

## 1.5.2 Reading and setting of the enumerators

Enumerators are the variables or parameters that have pre-defined non-numerical values, e.g., On - Off for the activation of different functions, etc. Fig. 10 shows a typical example of enumerator setting.

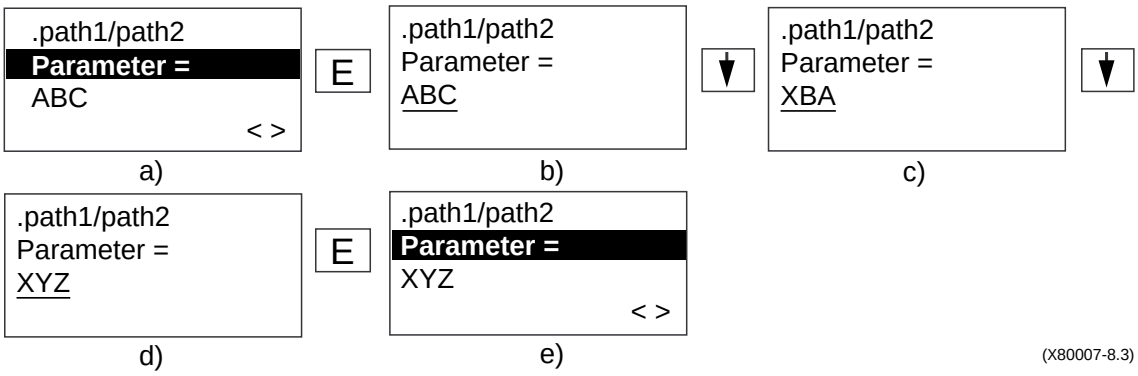


*Fig. 10 Setting and reading of the enumerators.*

The first data window for a specific variable or parameter shows the previous menu and the present one to inform the user about the position in the complete menu tree. The name of the parameter has a cursor, which indicates the possibility of entering the value by pressing the E key once. This way, a transition from Fig. 10a to Fig. 10b takes place. The present value of the enumerator appears in the third row of the first data window.

The value of the presented enumerator will change from one to another pre-defined possibility by pressing the up or down arrow key once (see Fig. 10b, Fig. 10c and Fig. 10d). The new value will become the one in question in the editing area after confirmation. This means, after pressing the E key one more time (transition from Fig. 10d to Fig. 10e).

## 1.5.3 Setting and reading of the strings

Strings are the parameters within the terminal that can have names defined by the user. Typical examples of strings are names of substations and lines within them, names of different input signals connected to binary inputs, etc.

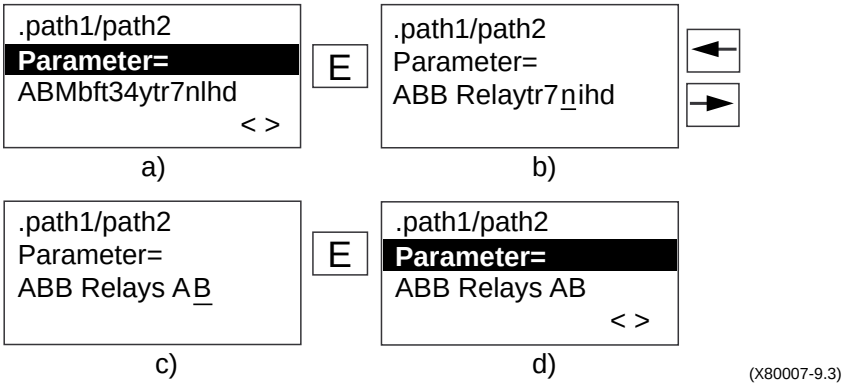


*Fig. 11 Setting of a string.*

Each string can have a name presented in one row by 13 or 16 characters.

The first row in the data window presents the last two branches of the menu tree (most strings are settable within the “Configuration” menu). The parameter that has a string value appears in the second row and its value in the third row (see Fig. 11a). A cursor on the parameter determines the possibility of entering (and changing) its value by pressing the E key (see Fig. 11). One of 16 signs gets a cursor (see Fig. 11b) and can be changed by pressing the up or down arrow key one time or continuously. Fast moving between different signs in a string is made possible by using the left and right arrow key (see Fig. 11c).

After completing the setting of a string value (user defined name - Fig. 11c), pressing the E key once will change the data window to the one shown in Fig. 11d, where the string has a new value.

## 1.5.4 Configuration and observation of the binary inputs

The user can define the names of the binary inputs that will appear later on in the disturbance reports under the “Configuration” submenu in the way that is shown in Fig. 12. After selection of a binary input branch in a menu window (Fig. 12a), a new menu window appears with the possibility of selecting the corresponding input/output (I/O) module. The I/O module B presents the binary inputs and outputs as installed in the basic version of a terminal (normally four binary inputs and five binary outputs, four of them are configurable). Optional modules built into a terminal have corresponding numbers for their identification.

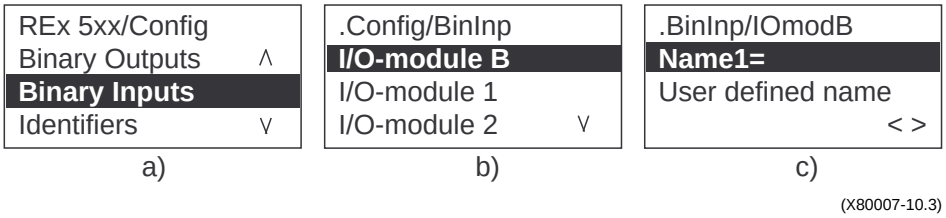


*Fig. 12 Configuration (naming) of binary inputs.*

The user can select the corresponding I/O module according to the instructions for navigation within the menu tree and thus move on to a data window, as shown in Fig. 12c. The user can enter the desired name or the corresponding binary input according to the instructions for the setting of strings.

The left and right arrows in the fourth row of the data window in Fig. 12c will appear if more binary inputs are available on the left or right side of the present one. This means that it is possible to reach the following binary input on the same I/O module by pressing the left or right arrow key once.

## 1.5.5 Configuration and observation of the binary outputs

Practically all internal signals and binary inputs within the terminal are freely programmable to any of the binary outputs (output relay contacts). The configuration must follow the graphically presented procedure in Fig. 13.

The selection of corresponding binary outputs on the particular I/O module follows the same procedure as described for the configuration of binary inputs. Thus, a data window as shown in Fig. 13c will appear on the local MMI unit.

The fourth row in the data window informs the user about the signal that is connected to the binary output shown in the second row. The third row shows the function the signal belongs to. The left and right arrows in the fourth row inform the user that there are some more binary outputs with a higher or lower serial number on the same I/O module. These outputs can be reached by pressing one or more times the left or right arrow key. Pressing the E key will turn the display to the one shown in Fig. 13d. The third line with the name of the function will now get a cursor which indicates the possibility of entering the function and possible selection of corresponding signals. User can find the other function that is of his interest by pressing one or more times on the up or down arrow key (see Fig. 13e).

After the proper function on Fig. 13e has been selected, it is necessary to activate the signal branch within this function by pressing the E key (see Fig. 13f and Fig. 13g). The user can reach other signals belonging to the same function by pressing once or more times to the up or down arrow key (Fig. 11g).

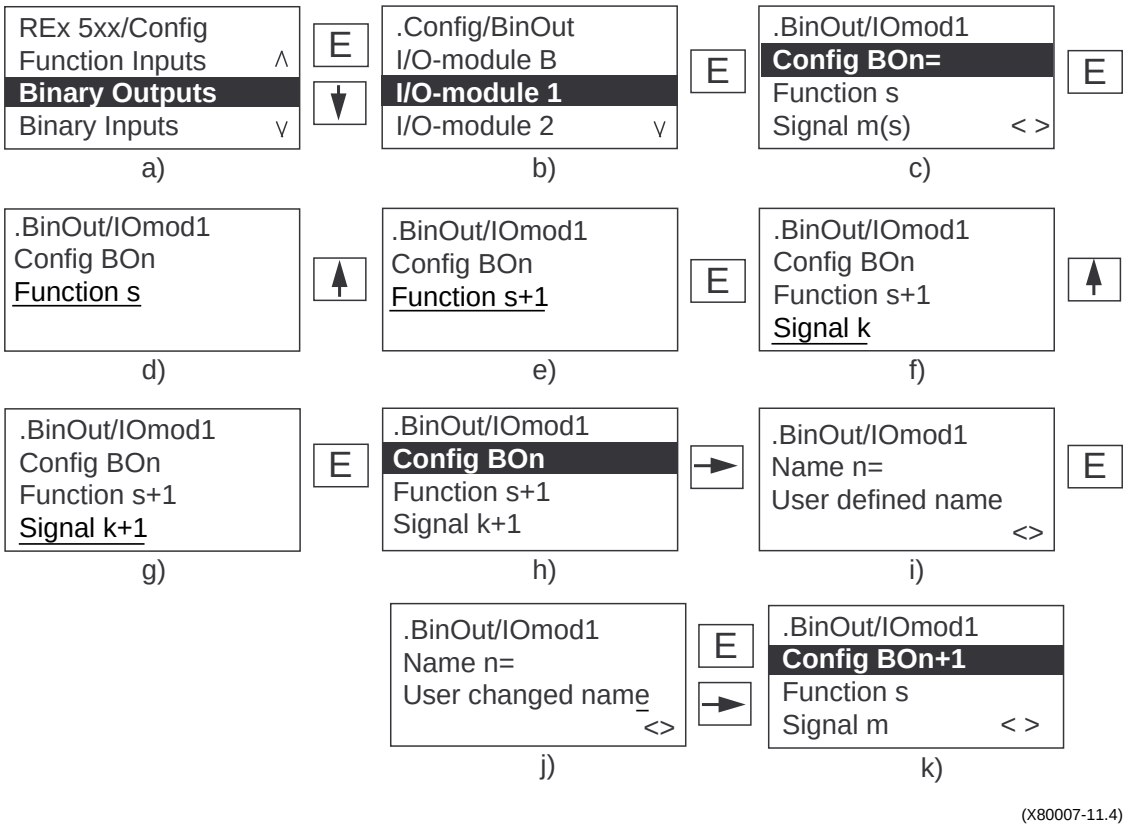


*Fig. 13 Configuration of the binary outputs.*

After the correct signal appears in the data window (Fig. 13g), it is necessary to confirm this by pressing the E key once. In this case a transition from the window in Fig. 13g to Fig. 13h takes place. This window informs the user about the function and signal that have been configured to the corresponding binary output. One press on the right arrow key will cause on this way a transition to the window as presented on Fig. 11i. Within this window, the user can set the preferred name for the selected signal on the binary output as shown in the second row. The setting procedure is the same as that described for setting the strings. After renaming the signal (see Fig. 13j), it is necessary to confirm the change by pressing the E key once.

The next binary output is selectable by aid of the right or left arrow keys, and configurable in a similar way (Fig. 11k).

The user can always leave the menu level in question and move one level up in the menu tree structure by pressing the C key once.

## 1.5.6 Configuration and observation of the functional inputs

Configurable functional inputs are connectable to any of the configurable functional outputs as well as to different binary inputs. Fig. 14 presents the procedure necessary for the configuration of functional inputs, where an input signal (m+1) that belongs to function n will be connected to the output signal (l + x) belonging to a function (k+1).

Configuration of the functional inputs takes place under the configuration menu. The first three data windows (Fig. 14a, b and c) bring the user to the function and input signal under consideration. In the third and fourth row of the LCD a function and a signal that have already been connected to the function n will be presented too. It is possible to select another input signal to the same function by pressing one or more time on the left or right arrow key and confirm the selection by pressing once on E key. When the selected function and input signal are confirmed, a transition to the dialogue window in Fig. 14d takes place.

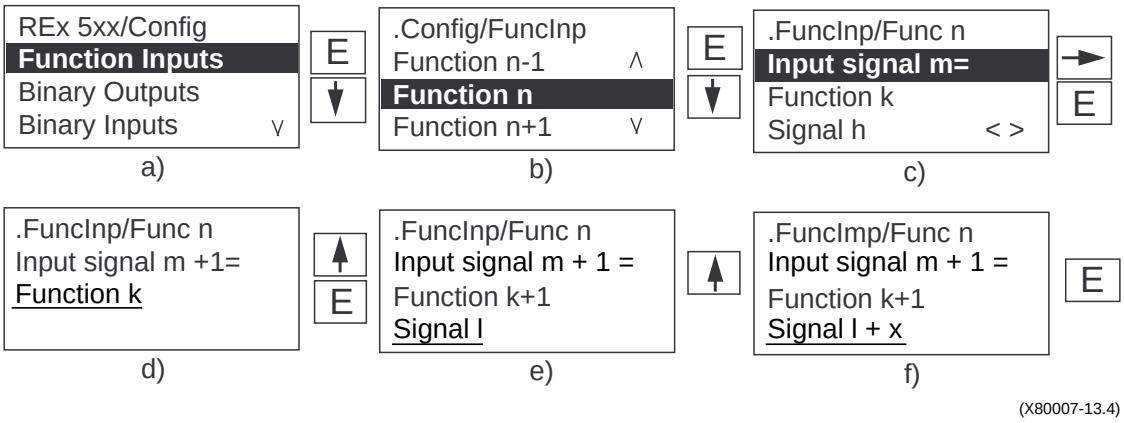


*Fig. 14 Configuration of the functional inputs.*

The user can select another input function by pressing one or more times on the up or down arrow key and confirm the selection by pressing once on the E key. Transition from Fig. 13d to Fig. 13e takes place.

Selection of the output signal is possible by pressing one or more times on the up or down arrow key. During this selection, a transition to Fig. 13f takes place. Selection must be confirmed by pressing once on the E key.

A menu window similar to the one presented in Fig. 14c will appear again and the configuration of some other signal for the same function is possible once more.

## 1.5.7 Setting of an internal time

Setting of the internal time for a complete terminal is possible under the setting menu, according to the example in Fig. 15.

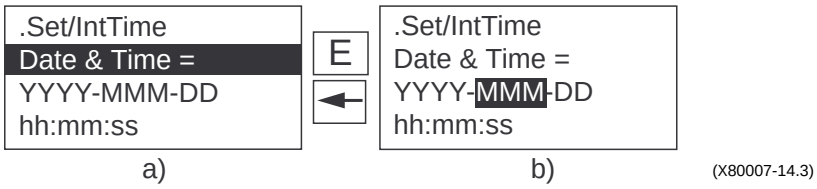


*Fig. 15 Setting of an internal time within a terminal.*

A transition from the data window in Fig. 15a to the one in Fig. 15b will take place after pressing the E key once, and the setting of different parts of a terminal's internal time becomes possible.

Real time within a terminal appears as a YYYY (year), MMM (first three letters of the month's name), DD (day in the month), hh (hour), mm (minutes) and ss (seconds). The setting of a month follows the rules for setting a string. All other values are real values and are settable correspondingly. Moving between different parts of the internal time is possible by using the left and/or right arrow key.

### 1.5.8 Presentation of some additional information

The terminal also provides the user with some more information on its operation, configuration and service conditions. The following information is available (also depending on the basic functions and options built into a particular terminal) to the user:

- Phasors of primary and secondary voltages and currents
- Logical signals that are active during the communication procedure
- Summary of the recorded disturbance under observation
- Time of the disturbance under observation
- The version of software that is built into the terminal
- The version of hardware that is built into the terminal

All this information is available under the different parts of a menu tree (See “Menu tree - Appendix 1”, 1MRK 580 016-XEN). The presentation of information follows the rules as valid for a data window.

In addition to this, a recalculation of the distance to fault is possible when the option “Fault locator” is built into the terminal. For a more detailed description, see the description of the function “Fault locator and phasors of currents and voltages”, 1MRK 580 020-XEN.

### 1.5.9 Saving the settings in a setting group

The setting procedure for the setting of different parameters within one of the four setting groups takes place in a separate editing area. The user will enter this area under the “Setting” submenu by pressing the E key for a desired setting group, as shown in Fig. 16.

After this, a setting procedure for the changing of different parameters for different functions takes place. To exit the editing area, it is necessary to press the C key, depending on the position in a menu tree, one or several times, until a dialogue window for a command with confirmation appears.

If the user press the C key accidentally one time too much, the terminal will change to the dialogue window with confirmation where it is necessary to confirm the cancellation of the previous setting activities by pressing on the E key (another key than before). Otherwise (by pressing again the C key) the menu tree will return to the first dialogue window.

The terminal will ask if the user wants to save the changed settings in the same setting group as started with (setting group n in Fig. 16). The user can confirm this decision or request saving of the settings in another setting group, available within the present menu window. Selection of the desired setting group is made possible by using the up or down arrow key.

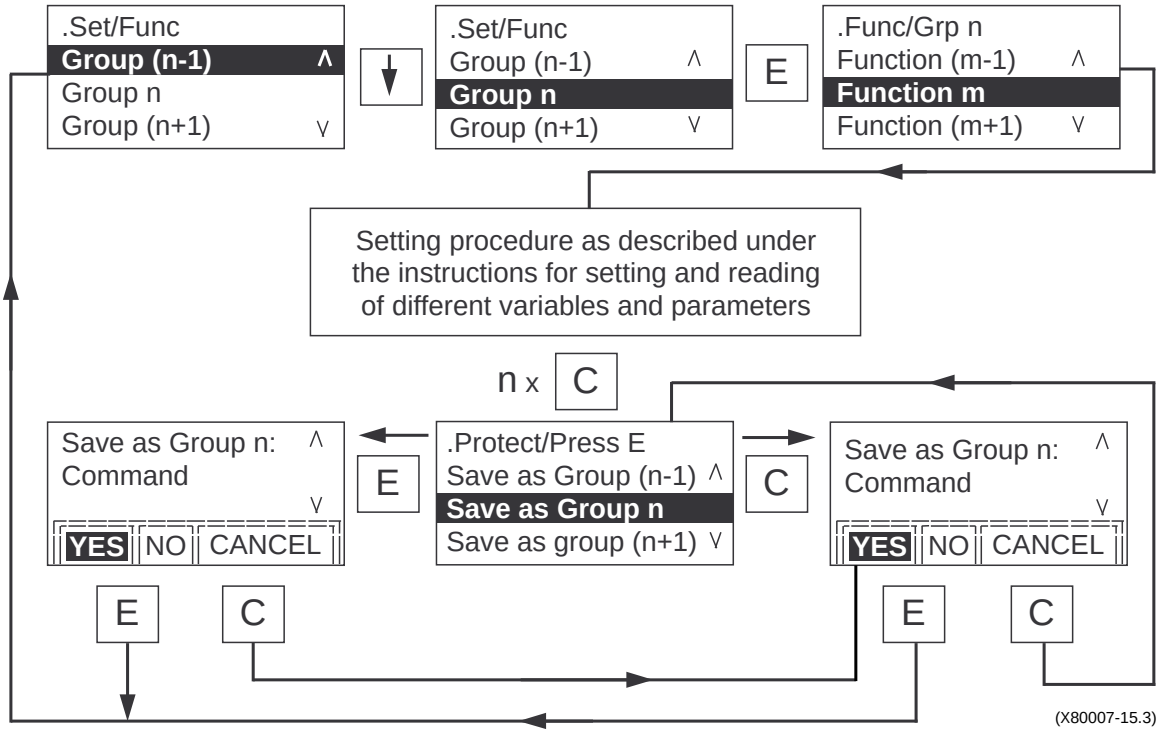


*Fig. 16 Saving the settings in a setting group.*

This feature also enables copying of the setting parameters from one setting group to another, when it is necessary to change only a small amount of parameters for different operating conditions.

The user will save the setting values as prepared within the editing area into a desired setting group by pressing the E key as shown in Fig. 16.

It is necessary to confirm this decision again when a dialogue window, asking for the confirmation of a decision, appears on the local MMI. The user will confirm the decision by pressing the E key once. A starting menu window for the selection of setting groups will appear again on the local MMI. New values of parameters take their place in the desired setting group.

The same principle as described for setting the parameters and saving them in a setting group has also been applied for the configuration procedure. The only difference between these two procedures is that no different configuration groups are available within the terminal.