Contents *Page*

1 RESTRICTED SETTINGS VIA MAN MACHINE INTERFACE UNIT 2

1.1 Application 2

1.2 Installation and setting instructions 3

1.3 Testing 4

1.4 Appendix 4

1.4.1 Terminal diagram 4

1.4.2 Signal list 5

1.4.3 Setting table 6

1 RESTRICTED SETTINGS VIA MAN MACHINE INTERFACE UNIT

WARNING!

Do not set this function in operation before reading carefully these instructions and configuring the functional input MMI--BLOCKSET to the selected binary input.

The functional input MMI--BLOCKSET is configurable only to one of the available binary inputs of a terminal. For this reason comes terminal with the default configuration where the MMI--BLOCKSET signal is connected to the binary input IOB--BI1, that is normally used for some other purposes. This means that the presence of a DC control voltage on the binary input IOB--BI1 will always restrict the setting possibilities by the aid of the man machine interface (MMI) if the function is set to "SeetingRestrict = Block".

1.1 Application

Setting values of different protection and control parameters as well as the configuration of different function and logical circuits within the terminal are not important only for reliable and secure operation of terminal itself, but for the whole power system.

Unpermitted and non co-ordinated changes, made by non-authorised persons can cause severe damages in primary and secondary power circuits. They can influence the security of people working in close vicinity of the primary and secondary apparatuses as well as those using electric energy in everyday life.

All REx 5xx have for this reason built in a special feature that, when activated, blocks the possibility of changing the settings or configuration of the terminal by the MMI unit.

All other functions of the local man machine communication remain intact. This means that the user can read all disturbance reports as well as setting values of different protection parameters and configuration of different circuits.

Function permits remote changes of settings and configuration through the built in serial communication ports, when option "remote communication" installed in the terminal and if the setting restrictions, that are settable only on the local MMI, permit remote changes of settings.

1.2 Installation and setting instructions

Fig. 1 presents the combined connection and logical diagram for the "restricted settings via MMI” function.

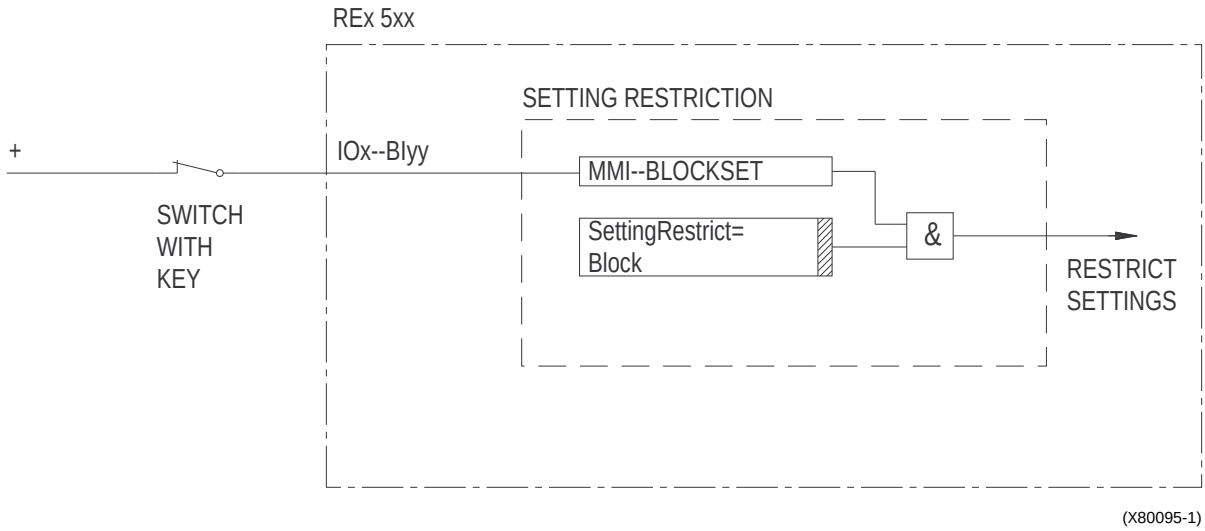

Fig. 1 Connection and logical diagram for the function

Input signal MMI--BLOCKSET must be configured to one of the binary inputs of a terminal.

Configuration of the functional input signal MMI--BLOCKSET under the submenu:

Configuration
FunctionInputs
BuiltInMMI

is possible only to one of the built in binary inputs. Select carefully this input between those that do not belong to any of other built in functions or logical circuits before activating the setting restriction function.

Set the setting restriction function under the submenu:

Configuration
BuiltInMMI
SettingRestric

to the Block.

The selected binary input must be connected to the control DC voltage via a normally closed contact of a control switch, which could be locked by a key in an open position. Only when the switch is closed, by its normally closed contact open, the settings of the terminal via the MMI are possible.

1.3 Testing

1.1 Configure the functional input to the binary input of the terminal, that is not used by any other built-in function.

1.2 Set the setting restriction to "Block"

1.3 Connect the rated control DC voltage to the selected binary input

1.4 Try to change setting of any parameter for one of the built in functions. Reading of the values must be possible. Terminal must not respond to any attempt on changing the setting value.

1.5 Disconnect the control DC voltage from the selected binary input.

1.6 Repeat attempt under item 1.4. Terminal must accept changed setting value.

1.7 Dependent on the requested design for a complete terminal, leave the function active or re configure the function into the default configuration and set the setting restriction function out of operation.

1.4 Appendix

1.4.1 Terminal diagram

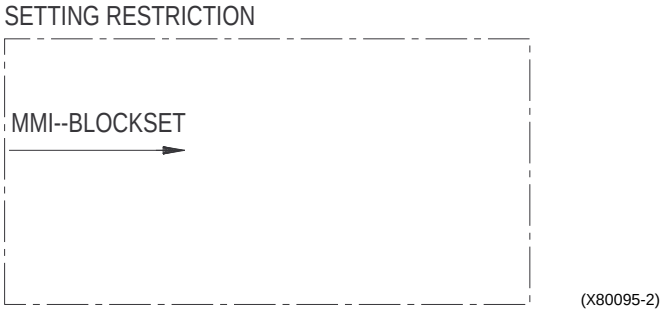

Fig. 2 Simplified terminal diagram of the function.

1.4.2 Signal list

CONNECTIONS:	TO:	SETTING:	DESCRIPTION:
MMI--BLOCKSET	BI		Input signal that restrict the setting and configuration possibilities by the MMI unit. It can be connected only to one of the binary inputs. **Warning: read the instructions before use!** **Default configuration to IOB--BI1**

1.4.3 Setting table

PARAMETER:	SETTING RANGE:	SETTING	DESCRIPTION:
		ACTUAL	
SettingRestrict	Open Block		Open = Permits changes in setting and configuration by local MMI regardless the input MMI--BLOCKSET Block = Blocks the possibility to change the settings or configuration by local MMI when the input signal MMI-BLOCKSET is active