Contents *Page*

1 PHASORS OF CURRENTS AND VOLTAGES 2

1.1 Application 2
1.1.1 Phasors of the voltages and currents 2

1.2 Design 2
1.2.1 Phase values calculation 2
1.2.2 Presentation of the service, pre-fault and fault phasors of the currents and voltages 4

1.3 Appendix 5
1.3.1 Phasor list 5

1 PHASORS OF CURRENTS AND VOLTAGES

1.1 Application

The main objective of the breaker protection and monitoring terminal is fast, selective and reliable operation for faults related to the protected circuit breaker section. Besides this, information of service values can be of great importance for those involved in operation and maintenance.The function ”presentation of phase values provides the following functions:

- phasors of primary and secondary currents and voltages during normal operating conditions.
- phasors of secondary pre-fault currents and voltages.
- phasors of secondary fault currents and voltages.

The phasors of the pre-fault as well as those of the fault currents and voltages, are stored for the last ten recorded disturbances and can be read on the local man machine interface (MMI) unit or transferred via serial communication within the Station Monitoring System (SMS) or Substation Control System (SCS).

1.1.1 Phasors of the voltages and currents

Under normal service conditions, the “the presentation of phase value” function calculates the service values for the primary and secondary phasors of the line voltages and currents. Their RMS values are available together with their phase angles.

Since the function is a part of the disturbance reporting function as built into the breaker terminal protection terminal REB 551, it records the phasors of pre-fault and fault currents and voltages every time the breaker terminal functions issues a trip command. It also records any other condition that might start the disturbance reporting function (disturbance recorder or event recorder).

1.2 Design

1.2.1 Phase values calculation

The explanation relates to the schematic presentation of the signal flow in Fig. 1.

Each millisecond, instantaneous values of voltages and currents are transmitted to the filtering processor. In the processor, the current frequency is determined and updated 3 times per frequency cycle, making use of the time between the zero crossings of the phase voltages. The frequency is used in the digital Fourier filtering algorithm, where the instantaneous values of the voltages and currents for a certain period are collected and processed to obtain the real and imaginary parts of the voltage and current phasors.

The measuring time is 1,75 cycles (35 milliseconds at 50 Hz). The output, which gives the real and imaginary part of the voltage and current phasors, is updated every 5 milliseconds and stored in the logic processor, where figures for the last 60 milliseconds are kept.

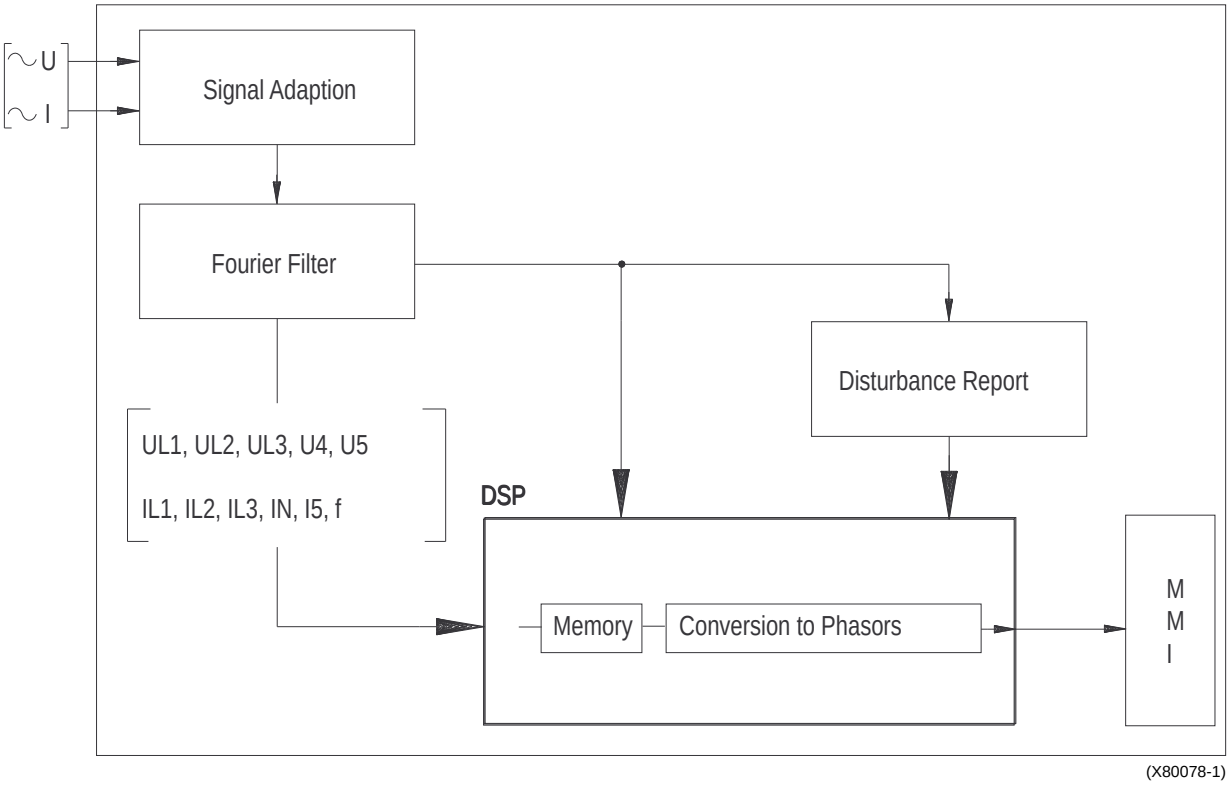

Fig. 1 Signal flow

When a fault occurs, As soon as an updated output figure is obtained from the Fourier filter (max. 5 milliseconds after the start instruction), the following occurs:

- The Fourier filter output values for a measuring period of 1,75 cycles, starting 60 milliseconds before “time zero” are frozen in the memory, to represent normal service values.
- The instantaneous values of the voltages and currents for the next 1,75 cycles, are processed to give the real and imaginary parts of the fault values.

1.2.2 Presentation of the service, pre-fault and fault phasors of the currents and voltages

The function is built into the breaker terminal REB 551,and the phasors of primary and secondary service currents and voltages are available, as well as the phasors of the pre-fault and fault currents and voltages, as seen and recorded by the function. Fig. 2 shows typical examples of the corresponding data windows. The explanations of the different parameter names are shown in the appendix, attached to this document.

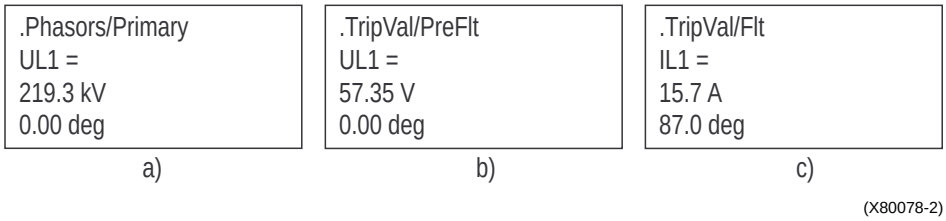

Fig. 2 Typical data windows presenting the phasors of voltages and currents.

The phasors of the primary and secondary service voltages and currents are available in the menu tree under the menu:

Service Report
- **Phasors**
  - **Primary (Second)**

A typical data window is presented in Fig. 2a. The first row informs the user whether the primary or the secondary value of the phasor is presented. The name of the phasor is located in the second row. Its RMS value will appear in the third row, while the fourth one brings information to the user on the relative phase position compared, as a reference, to the voltage in phase L1.

The phasors of the secondary pre-fault and fault voltages and currents are available in the menu tree under the menu:

Disturb. Report
- **Disturbances**
  - **Disturbance n**
    - **Trip Values**
      - **PreFault (Fault)**

Typical data windows are presented in Fig. 2b and Fig. 2c. The first row informs the user whether the pre-fault or the fault value of the phasor is presented. The name of the phasor is located in the second row. Its RMS value will appear in the third row, while the fourth one brings information to the user on the relative phase position compared, as a reference, to the voltage in phase L1.

1.3 Appendix

1.3.1 Phasor list

PARAMETER:	DATA WINDOW:	DESCRIPTION:
		Phasors of pre-fault voltages and currents for the disturbance No. n (n = 1 - 10)
	Menu Tree	**Disturb. Report - Disturbances - Disturbance n - Trip Values - PreFault**
UL1	.TripVal/PreFlt	Phase value of the phase L1 voltage - absolute RMS value and relative phase angle
UL2	.TripVal/PreFlt	Phase value of the phase L2 voltage - absolute RMS value and relative phase angle
UL3	.TripVal/PreFlt	Phase value of the phase L3 voltage - absolute RMS value and relative phase angle
U4	.TripVal/PreFlt	Phase value of the busbar voltage - absolute RMS value and relative phase angle
U5	.TripVal/PreFlt	Phase value of the busbar voltage - absolute RMS value and relative phase angle
IL1	.TripVal/PreFlt	Phase L1 current - absolute RMS value and relative phase angle
IL2	.TripVal/PreFlt	Phase L2 current - absolute RMS value and relative phase angle
IL3	.TripVal/PreFlt	Phase L3 current - absolute RMS value and relative phase angle
IN	.TripVal/PreFlt	Residual current 3Io - absolute RMS value and relative phase angle
I5	.TripVal/PreFlt	I5 current - absolute RMS value and relative phase angle - Not used for protection functions
Frequency	.TripVal/PreFlt	Frequency before the disturbance

PARAMETER:	DATA WINDOW:	DESCRIPTION:
		Phasors of the fault voltages and currents for the disturbance No. n (n = 1 - 10)
	Menu Tree	**Disturb. Report - Disturbances - Disturbance n - Trip Values - Fault**
UL1	.TripVal/Flt	Phase value of the phase L1 voltage - absolute RMS value and relative phase angle
UL2	.TripVal/Flt	Phase value of the phase L2 voltage - absolute RMS value and relative phase angle
UL3	.TripVal/Flt	Phase value of the phase L3 voltage - absolute RMS value and relative phase angle
U4	.TripVal/Flt	Phase value of the busbar voltage - absolute RMS value and relative phase angle
U5	.TripVal/Flt	Phase value of the busbar voltage - absolute RMS value and relative phase angle
IL1	.TripVal/Flt	Phase L1 current - absolute RMS value and relative phase angle
IL2	.TripVal/Flt	Phase L2 current - absolute RMS value and relative phase angle
IL3	.TripVal/Flt	Phase L3 current - absolute RMS value and relative phase angle
IN	.TripVal/Flt	Residual current 3Io - absolute RMS value and relative phase angle
I5	.TripVal/Flt	I5 current - absolute RMS value and relative phase angle - Not used for protection functions
Frequency	.TripVal/Flt	Frequency during the disturbance

PARAMETER:	DATA WINDOW:	DESCRIPTION:
		Phasors of the primary service voltages and currents
	Menu Tree	**Service Report - Phasors - Primary**
UL1	.Phasors/Primary	Phase value of the phase L1 voltage - absolute RMS value and relative phase angle
UL2	.Phasors/Primary	Phase value of the phase L2 voltage - absolute RMS value and relative phase angle
UL3	.Phasors/Primary	Phase value of the phase L3 voltage - absolute RMS value and relative phase angle
U4	.Phasors/Primary	Phase value of the busbar voltage - absolute RMS value and relative phase angle
U5	.Phasors/Primary	Phase value of the busbar voltage - absolute RMS value and relative phase angle
IL1	.Phasors/Primary	Phase L1 current - absolute RMS value and relative phase angle
IL2	.Phasors/Primary	Phase L2 current - absolute RMS value and relative phase angle
IL3	.Phasors/Primary	Phase L3 current - absolute RMS value and relative phase angle
IN	.Phasors/Primary	Residual current $3I_0$ - absolute RMS value and relative phase angle
I5	.Phasors/Primary	I5 current - absolute RMS value and relative phase angle - Not used for protection functions

PARAMETER:	DATA WINDOW:	DESCRIPTION:
		Phasors of the secondary service voltages and currents
	Menu Tree	**Service Report - Phasors - Second**
UL1	.Phasors/Second	Phase value of the phase L1 voltage - absolute RMS value and relative phase angle
UL2	.Phasors/Second	Phase value of the phase L2 voltage - absolute RMS value and relative phase angle
UL3	.Phasors/Second	Phase value of the phase L3 voltage - absolute RMS value and relative phase angle
U4	.Phasors/Second	Phase value of the busbar voltage - absolute RMS value and relative phase angle
U5	.Phasors/Second	Phase value of the busbar voltage - absolute RMS value and relative phase angle
IL1	.Phasors/Second	Phase L1 current - absolute RMS value and relative phase angle
IL2	.Phasors/Second	Phase L2 current - absolute RMS value and relative phase angle
IL3	.Phasors/Second	Phase L3 current - absolute RMS value and relative phase angle
IN	.Phasors/Second	Residual current 3Io - absolute RMS value and relative phase angle
I5	.Phasors/Second	I5 current - absolute RMS value and relative phase angle - Not used for protection functions