Contents *Page*

1 SYSTEM SUPERVISION OVERLOAD 2

1.1 Application 2

1.2 Theory of operation 2

1.3 Setting 3

1.4 Testing 3
1.4.1 General 3
1.4.2 Testing of the overload supervision function 4

1.5 Technical data 5

1.6 Appendix 5
1.6.1 Terminal diagrams 5
1.6.2 Signal list 6
1.6.3 Setting table 7

1 SYSTEM SUPERVISION OVERLOAD

1.1 Application

In a 1 1/2-breaker switchgear arrangement there could be a risk to direct a high load current through a certain breaker section at an unfavourable combination of breaker states. This current may not appear in the power line or transformer circuits. In REB 551 the breaker current is measured. The current check serves for alarming purposes when the current exceeds the set level for a pre-set time. The operating level of a current measuring element can be set on maximum accepted continuous current and can give the operator an alarm that the primary system is running in a dangerous mode.

In the standard configuration the output function of this function is connected to the trip function. If the trip function should give an alarm, the configuration must be changed.

1.2 Theory of operation

The current measuring elements measure the three-phase currents continuously, and compare them with the set values. Fourier's recursive filter filters the current signals.

The logical values of the following signal will be equal to 1, if the measured current exceeds the pre-set value:

- SUPI for the overload supervision function

Fig. 1 shows a simplified block diagram of the overload supervision function. The logical signals SUPI starts the timer with a settable time delay. If the SUPI signal is present for the time longer than the value set on the timer t, the output signal SSUP-TROL will get the logical value 1.

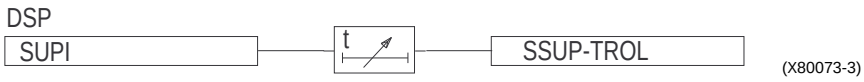

Fig. 1 System supervision overload - simplified block diagram.

1.3 Setting

Setting of the operating level for the overload supervision function takes place under the menu:

Setting
Functions
Group n
OverLoad

The current level set should be above the maximum permissible load current. It is also necessary to consider the accuracy class of the used instrument transformers and specified accuracy of the current measuring elements in the REx 5xx terminals.

The corresponding time delay must be according to the selectivity planning of the protection in a whole network and with the permissible overloading of the conductors with the current that corresponds to the set value of the operating current for the overload supervision function.

The above setting might change to a lower current value and to a higher time delay if the function serves only to the alarming and not to the tripping purposes.

1.4 Testing

1.4.1 General

The operating values of the current and voltage measuring elements and corresponding functions have to be checked during the commissioning as well as during regular maintenance tests. ABB Relays recommends, although it does not absolutely request, the use of testing equipment of type RTS 21 (FREJA) for purposes of secondary injection testing.

The test equipment used should be capable of providing an independent three-phase supply of voltages and currents to the tested terminal. Furthermore, it must be possible to change the values of voltages, currents and phase angles between the measuring quantities, independent of each other, for each phase separately. The test voltages and currents should have a common source, with a very small content of higher harmonics. If the test equipment can not indicate the phase angles between the measured quantities, a separate phase angle meter will be needed.

Before testing, it is necessary to connect the testing equipment according to the valid terminal diagram of the particular REB 551 terminal. Special attention should be paid to the correct connection of the input and output current terminals, and to the connection of the residual current.

1.4.2 Testing of the overload supervision function

The following steps are necessary for the testing of the overload supervision function:

1.1 Set the time delay of the timer belonging to the overload supervision function at 0.

1.2 Slowly increase the current in all three phases simultaneously until the signal SSUP-TROL appears on the corresponding binary output or on the local MMI unit. Read the operating value of the current measuring elements and compare it with the setting value.

1.3 Set the time delay of the corresponding timer at the value that will be set during the normal operation of the terminal. Increase the measured current instantaneously in all three phases to 1,2 times the operating current, and measure the time delay of signal SSUP-TROL.

1.5 Technical data

Table 1: System supervision overload

Function	Setting range
Power system supervision operating current I> time delay	 (20-300)% I_r in steps of 1% (0-60) s in steps of 1 s

1.6 Appendix

1.6.1 Terminal diagrams

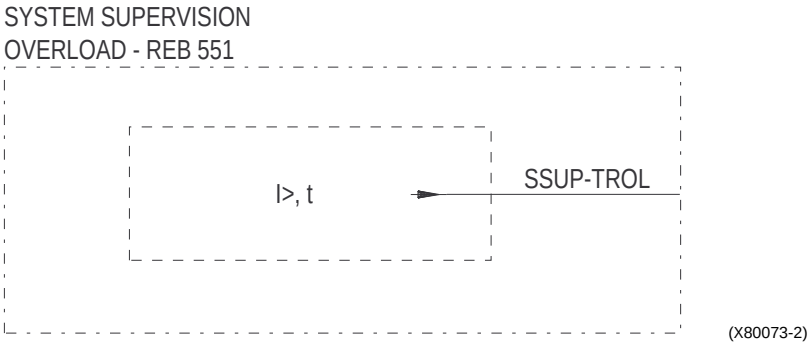

Fig. 2 Simplified terminal diagram of the function.

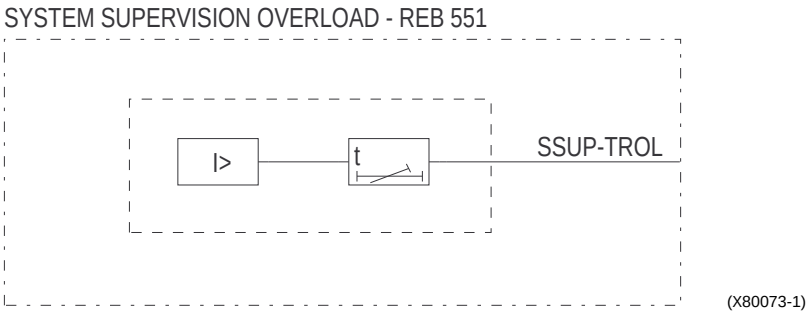

Fig. 3 Terminal diagram of the function.

1.6.2 Signal list

CONNECTIONS:	TO:	SETTING:	DESCRIPTION:
			Overload supervision function
PRODUCTION:	**TO:**	**SETTING:**	**DESCRIPTION:**
SSUP-TROL	BO,TRIP		Output signal from the overload supervision function

1.6.3 Setting table

PARAMETER:	SETTING RANGE:	SETTING				
		ACTUAL				
Overload supervision function		**Group 1**	**Group 2**	**Group 3**	**Group 4**	**DESCRIPTION:**
Operation	Off / On					Operation of the overload supervision function enabled or disabled
I>	(20 - 300) % of I_r					Operating level of the overcurrent measuring elements within the overload supervision function
t	(0- 60 s)					Time delay of the overload supervision function