Contents *Page*

1 SYNCHRONISM AND ENERGIZING CHECK 2

1.1 Application 2
1.1.1 Synchronism check 2
1.1.2 Energizing check 4

1.2 Theory of operation 5

1.3 Setting 7

1.4 Testing 8
1.4.1 Test of synchro-check 9
1.4.2 Test of energizing check 12

1.5 Technical data 14

1.6 Appendix 14
1.6.1 Terminal diagrams 14
1.6.2 Signal list 16
1.6.3 Setting table 17

1 SYNCHRONISM AND ENERGIZING CHECK

1.1 Application

1.1.1 Synchronism check

The synchro-check function is used for controlled closing of a circuit in an already interconnected network. When used, the function gives an enable signal at satisfied voltage conditions across the breaker to be closed. When there is a parallel circuit established, the frequency is normally the same at the two sides of the open breaker. At power swings, e.g. after a line fault, there appears an oscillating difference. Across the open breaker there can be a phase angle and an voltage amplitude difference due to voltage drop across the parallel circuit or circuits. The synchro-check function measures the difference between the U-Line and the U-bus, with respect to voltage (UDiff), phase angle (PhaseDiff), and frequency (FreqDiff). It operates and permits closing of the circuit breaker when the following conditions are simultaneously fulfilled.

- The voltages U-Line and U-Bus are higher than the set value for UHigh of the rated voltage U_r .
- The differences in the voltage and phase angles are smaller than the set values of UDiff and PhaseDiff.
- The difference in frequency is less than the set value of FreqDiff. The bus frequency must also be within a range of ±5 Hz from the rated frequency.

The function can be used, together with the autorecloser function, as a condition to be fulfilled before the breaker is closed.

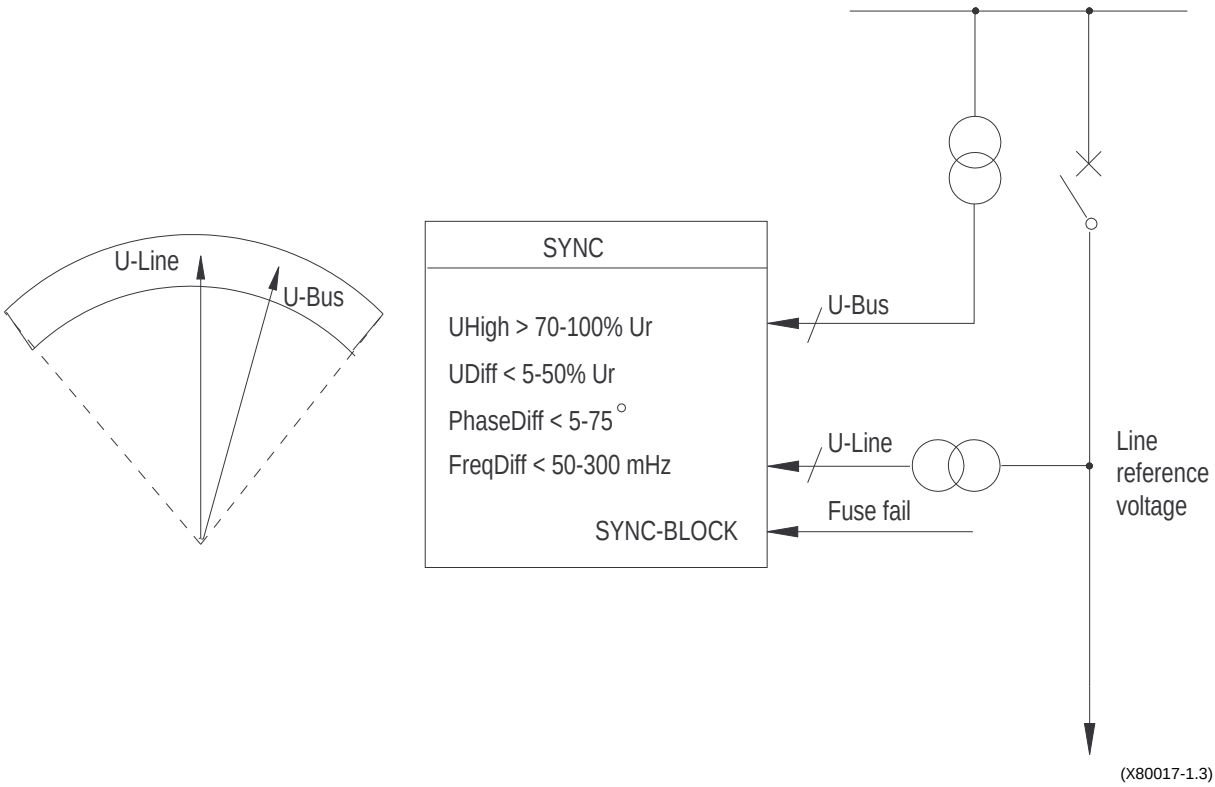

Fig. 1 Synchronism check.

From the U-Line voltage, the reference phase is selected on the man machine interface (MMI). The reference voltage can be single-phase L1, L2, L3 or phase-phase L1-L2, L2-L3, L3-L1. The U-Bus voltage must then be connected to the same phase or phases as are chosen on the MMI. The voltage connection is shown in fig 2. The circuit breaker can be closed when the conditions for FreqDiff, PhaseDiff and UDiff are fulfilled, together with the UHigh condition.

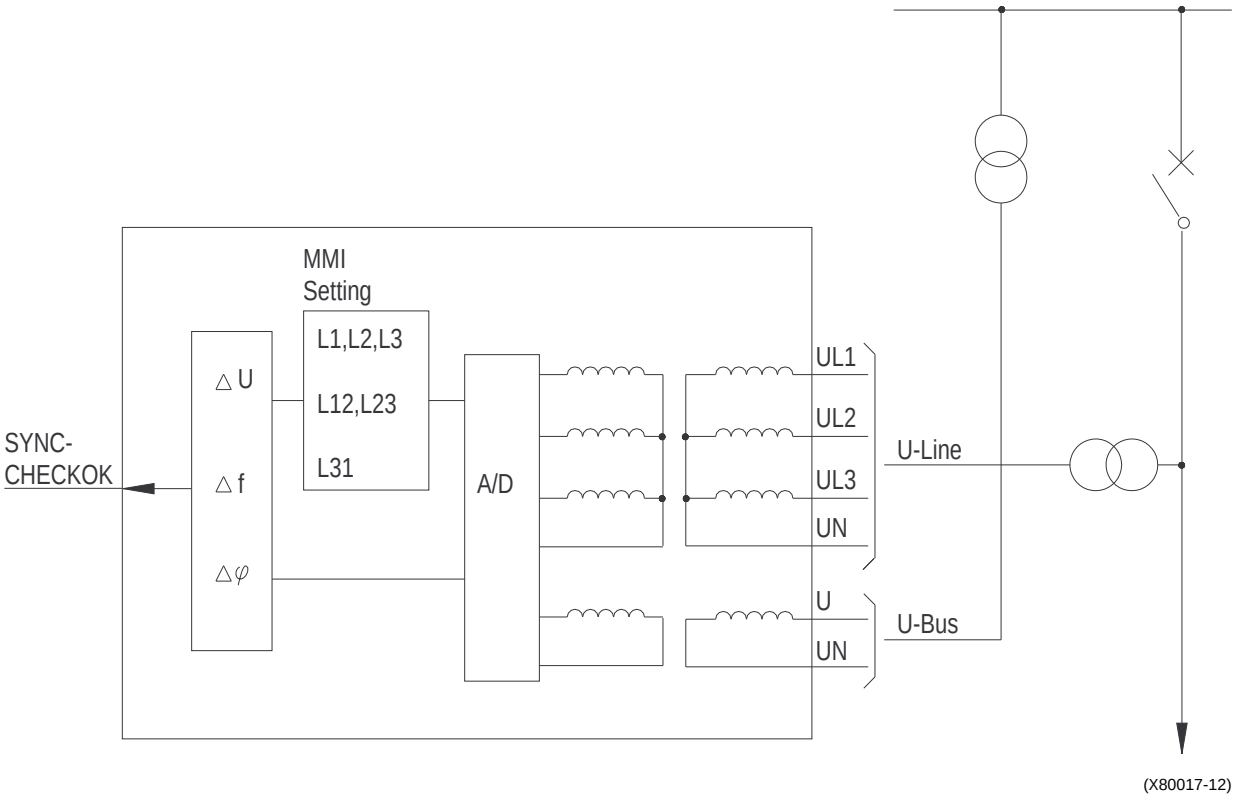

Fig. 2

1.1.2 Energizing check

The energizing check is made when a disconnected line is to be connected to an energized section of a network, see Fig. 3. The check can also b to allow energization of the busbar or in both directions.

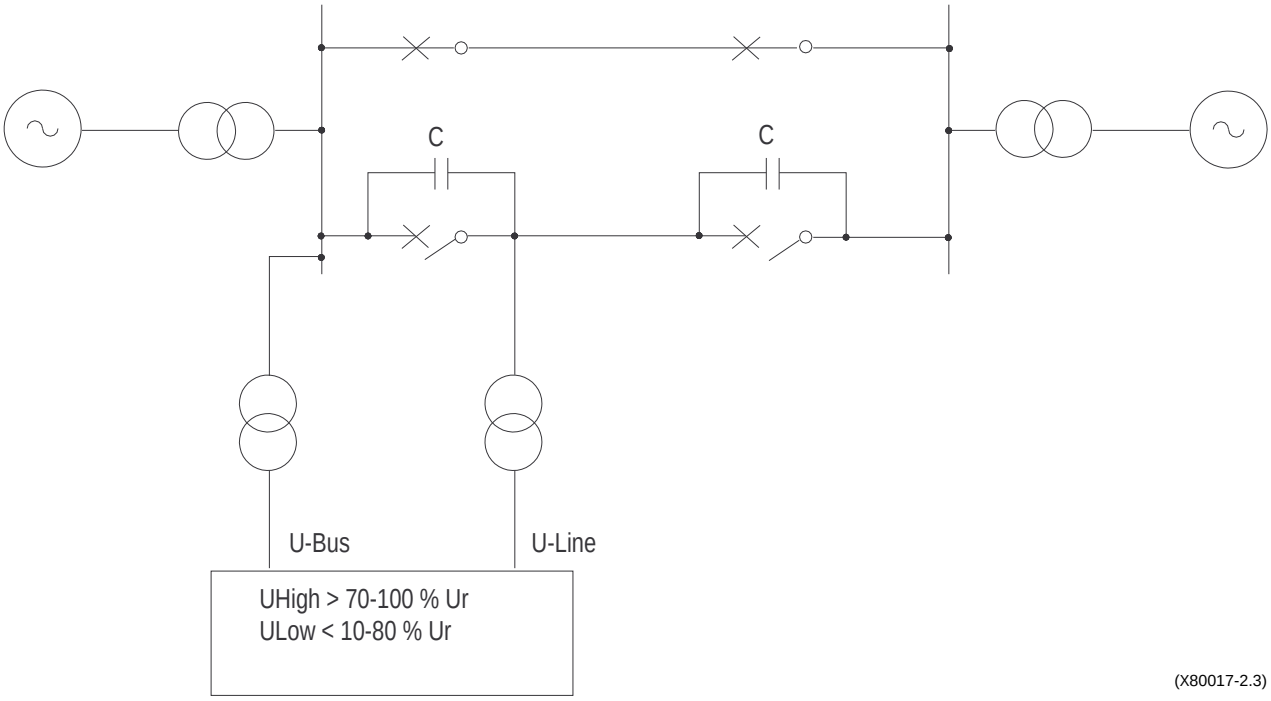

Fig. 3 Energizing check.

The voltage value, lower than which the line or the busbar, is considered non-energized, and energizing may consequently take place, is set on the MMI. There are separate settable limits for energized (live) condition, UHigh, and non-energized (dead) ULow conditions. The equipment is considered energized if the voltage is above the set value UHigh (e.g. 80% of rated voltage), and non-energized if it is below the set value, ULow (e.g. 30% of the rated voltage) It is possible to set the UHigh condition between 70-100% U_r , and the ULow condition between 10-80% U_r .

A disconnected line can have a considerable potential due to, for instance, induction from a line running in parallel, or by being fed via the extinguishing capacitors in the circuit breakers. This voltage can be as high as 30% or more of the rated voltage of the line.

The energizing operation can be set to operate in either direction over the circuit breaker, or it can be permitted to operate in both directions. This is selected under the MMI setting “Energizing”, with DLLB (Dead line live bus), DBLL (Dead bus live line), or in both directions. The voltage check can also be set “Off”. A closing impulse is issued to the circuit breaker if one of the U-Line or U-Bus voltages is “High” and the other is “Low”, i.e. when only one side is energized.

1.2 Theory of operation

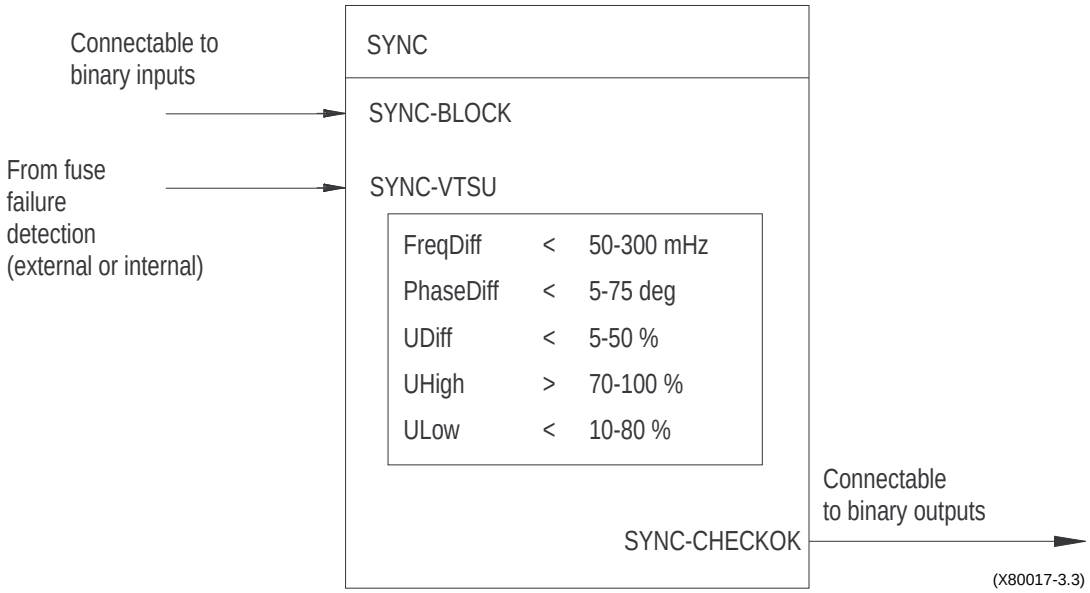

Fig. 4 Input and output signals.

SYNC

Input signals	Description
SYNC-BLOCK	Block energizing and synchro-check signal from a fuse switch or fuse failure relay in the voltage transformer circuit. The block input signal can also come from some other external condition, that should block the synchro-check.
SYNC-VTSU	The SYNC function co-operates with the connected signal FUSE-VTSU, which is the fuse failure detection. This is a blocking condition for the energizing function.

Output signals	Description
SYNC-CHECKOK	Synchro-check/Energizing OK. The output signal is high when the synchro-check conditions set on the MMI are fulfilled. It can also include the energizing condition, if selected. The signal can be used to release the autorecloser before a closing attempt of the circuit breaker. It can also be used as a free signal.

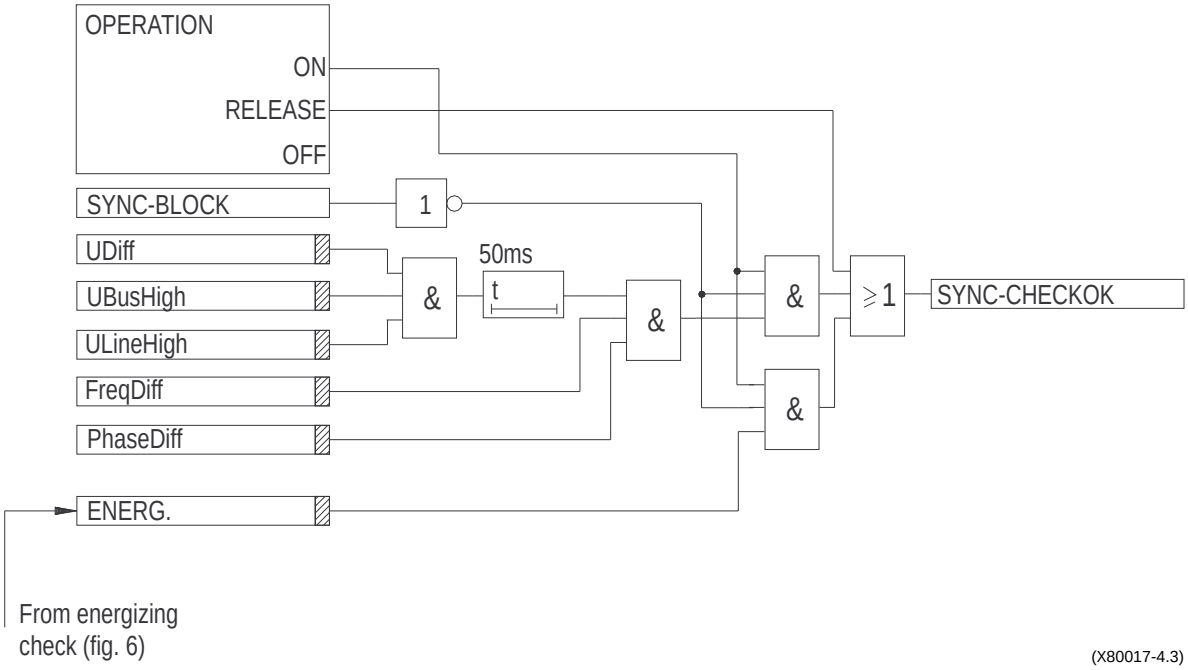

Fig. 5 Block diagram - Synchro-check.

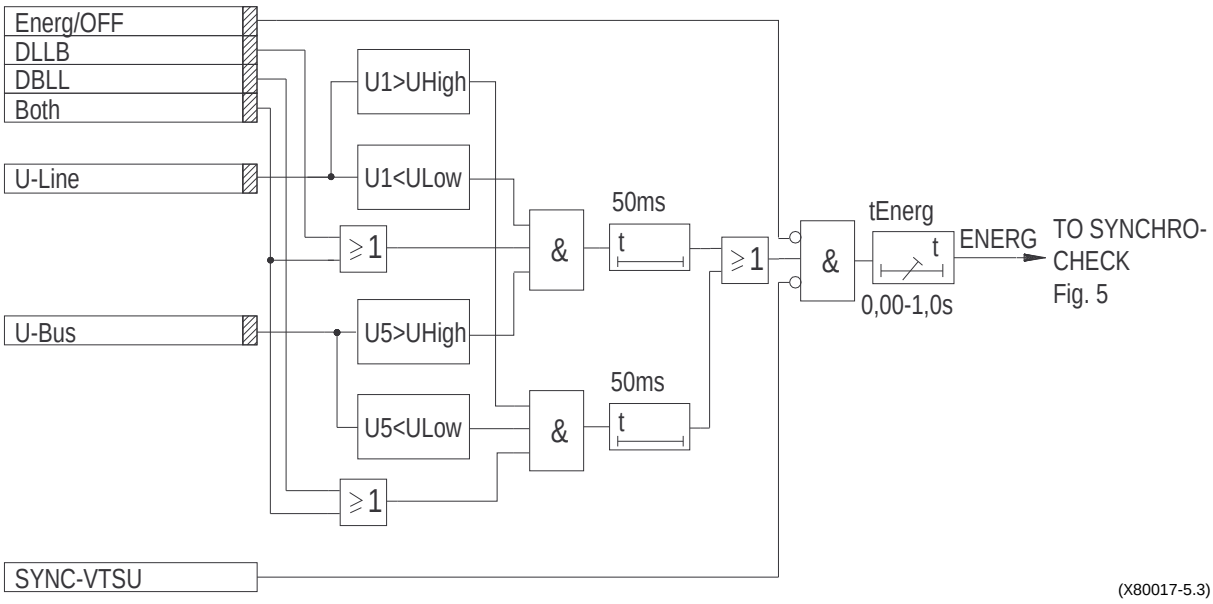

Fig. 6 Block diagram - Energizing check.

1.3 Setting

SYNC

The setting parameters are accessible through the MMI. The parameters for the synchro-check function are found in the MMI-tree under:

Settings
Functions
Group 1,2,3 and 4
SynchroCheck

Comments regarding settings:

Operation: Off/Release/On

At operation = Off	the function is off and the output is low.
At operation = Release	there is a fixed high output signal SYNC-CHECKOK = 1.
At operation = On	the function B in service and the output signal depends on the input conditions.

Input phase: The measuring phase of the line voltage U1, which can be of a single-phase (phase-neutral) or two-phases (phase-phase).

Energizing: Off, the energizing condition is not used, only the synchro-check.

DLLB	the line voltage U-Line is low, below (10-80% U_r) and the bus voltage U-Bus is high, above (70-100% U_r).
DBLL	the bus voltage U-Bus is low, below (10-80% U_r), and the line voltage U-Line is high, above (70-100% U_r).
Both	energizing can be carried out in both directions, i.e. DLLB or DBLL.
tEnerg	the required consecutive time of fulfilment of the energizing condition to achieve SYNC-CHECKOK.

1.4 Testing

At periodical checks, the functions should preferably be tested with the used settings. In order to test a particular function, it may be necessary to change some setting parameters, e.g. “Energizing = Off, DLLB, DBLL, Both”, or “Operation = Off, On”. In the following tests, settings which can be used as a reference during testing are stated, before the final settings are determined. After the tests, the equipment should be restored to normal or desired settings.

Test equipment

A secondary injection test set with the possibility of altering the phase angle by regulation of the resistive and reactive components. In this case, phase angle meter is also needed. To perform an accurate test of the frequency difference, a frequency generator at one of the input voltages is needed. The tests can also be performed with a computer aided test system of type FREJA in general, or FREJA RTS 21 in particular, which has a specially designed program for the evaluation of a synchro-check function.

The following general test connection principle can be used during testing.

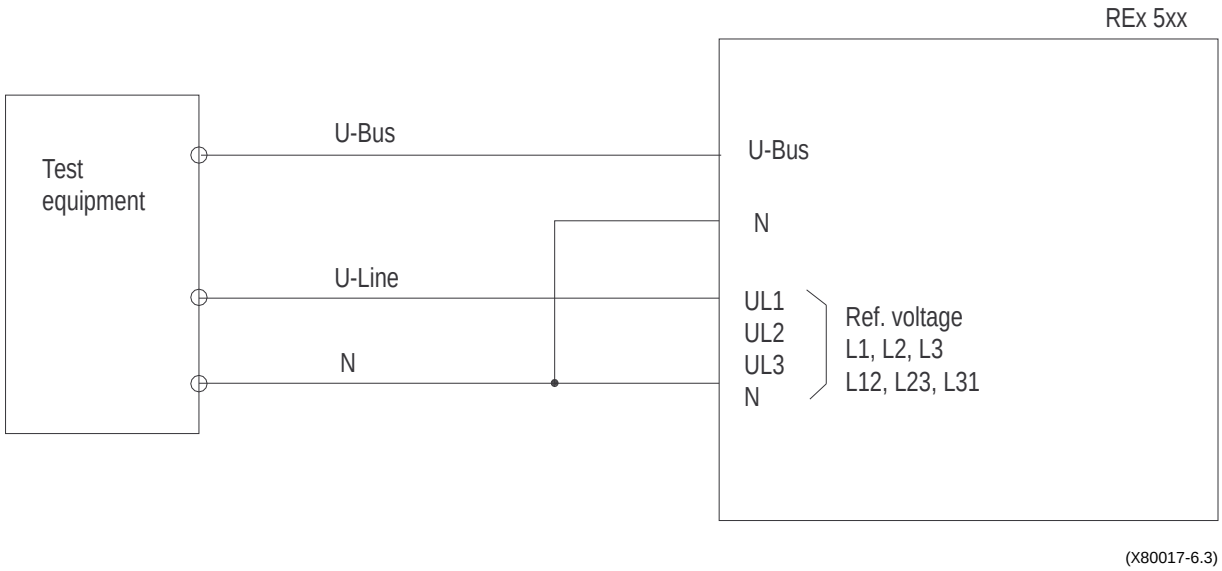

Fig. 7 General test connection.

1.4.1 Test of synchro-check

Test of voltage difference

The voltage difference is set at 30% U_r on the MMI, and the test should check that operation is achieved when the voltage difference UDiff is lower than 30% U_r .

The following voltage inputs are used:

U-Line Voltage input UL1, UL2 or UL3 on the terminal.

U-Bus Voltage input U5 on the terminal

The following MMI settings can be used during the test if the final setting is not determined:

1.1 Set the following MMI settings, which are found under:

Settings
Functions
Group n
SynchroCheck

Parameter	Setting
Operation	On
InputPhase	UL1
Energizing	Off
UHigh	70% U_r
ULow	40% U_r
FreqDiff	0,05 Hz
PhaseDiff	45°
UDiff	30%
tEnerg	0,5 s

1.2 **Test with UDiff = 0%**
Apply voltages U-Line (UL1) = 80% U_r and U-Bus (U5) = 80% U_r .)
Check that the output “SYNC-CHECKOK” is activated.
The test can be repeated with different voltage values to verify that the function operates within UDiff <30%.

1.3 **Test with UDiff = 40%**
Increase the U-Bus (U5) to 120% U_r , and the U-Line (UL1) = 80% U_r .
Check that the output “SYNC-CHECKOK” is **not** activated.

1.4 **Test with UDiff = 20%, Uline < UHigh**
Decrease the U-Line (UL1) to 60% U_r and the U-Bus (U5) to be equal to 80% U_r .
Check that the output “SYNC-CHECKOK” is **not** activated.

Test of phase difference

The phase difference is set at 45° on the MMI, and the test should verify that operation is achieved when the phase difference “PhaseDiff” is lower than 45°.

2.1 Set the following MMI settings:

Parameter	Setting
Operation	On
InputPhase	UL1
Energizing	Off
UHigh	70% U_r
ULow	40% U_r
FreqDiff	0,05 Hz
PhaseDiff	45°
UDiff	15%
tEnerg	0,5 s

2.2 **Test with PhaseDiff = 0°**
Apply voltages U-Line (UL1) = 100% U_r and U-Bus (U5) = 100% U_r , with a phase difference equal to 0° and a frequency difference is lower than 50 mHz.
Check that the output “SYNC-CHECKOK” is activated.

2.3 The test can be repeated with other “PhaseDiff” values in order to verify that the function operates for values lower than the set one. By changing the phase angle on U1 connected to U-Bus, between 45° it can be checked that output “SYNC-CHECKOK” is activated for a PhaseDiff lower than 45°. It should not operate for other values. Ref. to Fig. 8.

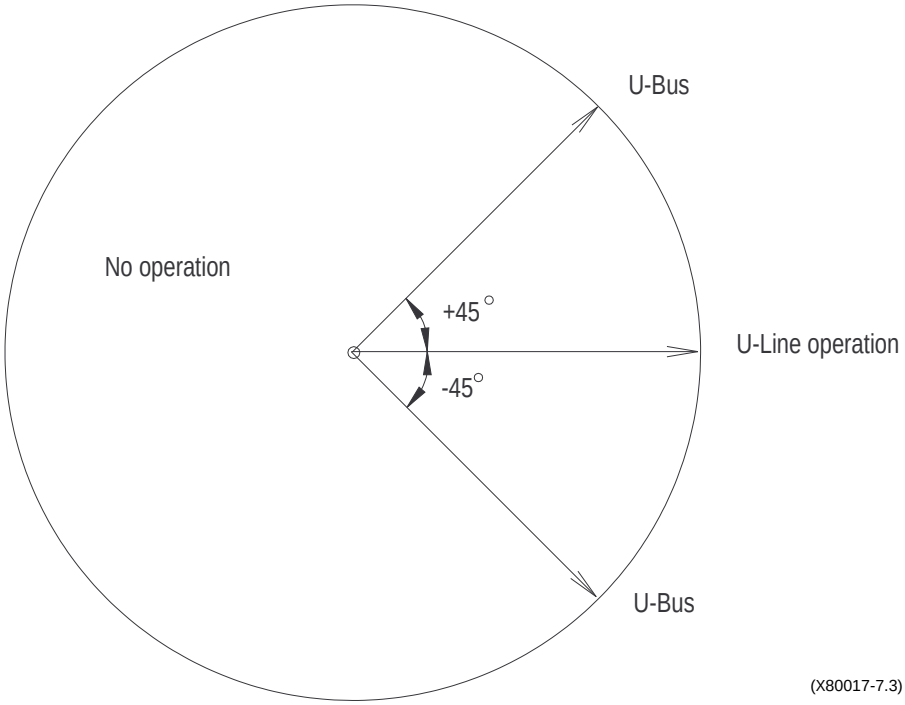

Fig. 8 Test of phase difference.

Test of frequency difference

The frequency difference is set at 50 mHz on the MMI, and the test should verify that operation is achieved when the frequency difference FreqDiff is lower than 50 mHz.

3.1 Use the same MMI setting as under “Test of phase difference“.

3.2 **Test with FreqDiff = 0 mHz**
Apply voltages U-Line (UL1) equal to 100% U_r and U-Bus (U5) equal to 100% U_r , with a frequency difference equal to 0 mHz and a phase difference lower than 45°. The output “SYNC-CHECKOK” should be activated.

3.3 **Test with FreqDiff = 1Hz**
Apply voltage to the U-Line (UL1) equal to 100% U_r with a frequency equal to 50 Hz and voltage U-Bus (U5) equal to 100% U_r , with a frequency equal to 49 Hz.
Check that the output “SYNC-CHECKOK” is **not** activated.

3.4 The test can be repeated with different frequency values to verify that the function operates for values lower than the set one. If the FREJA program “Test of synchronising relay” is used, the frequency can be changed continuously.

It should, however, be noted that a frequency difference also implies a floating mutual phase difference. The output “SYNC-CHECKOK” may therefore not be stable, even though the frequency difference is within set limits, owing to the fact that the phase difference is not stable!

Test of reference voltage

4.1 Use the same basic test connection as shown in Fig. 7. The setting can be the same as that used under “Test of voltage difference”. The UDiff between the voltage connected to U-Bus and U-Line should be 0%, so that the output “SYNC-CHECKOK” is activated first. Then change the U-Line connection to UL2, but keep the setting on the MMI.

4.2 The “SYNC-CHECKOK” should **not** be activated.

4.3 The test can also be repeated by moving the U-Line to the UL3 input.

1.4.2 Test of energizing check

The following voltage inputs are used:

U-Line = Voltage input UL1, UL2 or UL3 on the terminal.

U-Bus = Voltage input U5 on the terminal

Test of Dead Line - Live Bus (DLLB)

The test should verify that the energizing function operates for a low voltage on the U-Line and for a high voltage on the U-Bus. This corresponds to an energizing of a dead line to a live bus.

The following MMI settings can be used during the test if the final setting is not determined.

5.1 Set the following MMI settings which are found under:

Settings
Functions
Group n
SynchroCheck

Parameter	Setting
Operation	On
InputPhase	UL1
Energizing	DLLB
UHigh	80% U_r
ULow	40% U_r

5.2 Apply a single-phase voltage 100% U_r to the U-Bus (U5), and a single-phase voltage 30% U_r to the U-Line (UL1).

5.3 Check that the output “SYNC-CHECKOK” is activated.

5.4 Increase the U-Line (UL1) to 60% U_r and U-Bus(U5) to be equal to 100% U_r . The output “SYNC-CHECKOK” should **not** be activated.

5.5 The test can be repeated with different values on the U-Bus and the U-Line.

Dead Bus - Live Line (DBLL)

The test should verify that the energizing function operates for a low voltage on the U-Bus and for a high one on the U-Line. This corresponds to an energizing of a dead bus from a live line.

6.1 Change the MMI setting “Energizing” to **DBLL** (Dead bus Live line).

6.2 Apply a single-phase voltage of 30% U_r to the U-Bus (U5) and a single-phase voltage of 100% U_r to the U-Line (UL1).

6.3 Check that the output “SYNC-CHECKOK” is activated.

6.4 Decrease the U-Line to 60% U_r and keep U-Bus equal to 30% U_r . The “SYNC-CHECKOK” should **not** be activated.

6.5 The test can be repeated with different values on the U-Bus and the U-Line.

Energizing in both directions (DLLB or DBLL)

7.1 Change the MMI setting “Energizing” to **Both** (Energizing in both directions).

7.2 Apply a single-phase voltage of 30% U_r to the U-Line (UL1) and a single-phase voltage of 100% U_r to the U-Bus (U5).

7.3 Check that the output “SYNC-CHECKOK” is activated.

7.4 Change the connection so that the U-Line (UL1) is equal to100% U_r , and the U-Bus (U5) is equal to 30% U_r .

7.5 The output “SYNC-CHECKOK” should still be activated.

7.6 The test can be repeated with different values on the U-Bus and the U-Line.

7.7 Restore the equipment to normal or desired settings.

1.5 Technical data

Table 1:

Function	Setting range	Accuracy
Synchronism check		
frequency difference limit	(50-300) mHz in steps of 10	< 20 mHz
voltage difference limit	(5-50)% of U_r in steps of 1	< 2.5% of U_r
phase difference limit	(5-75)° in steps of 1	+- 2° at U_r
Energizing		
voltage level high	(70-100)% of U_r in steps of 1	± 2.5% of U_r
voltage level low	(10-80)% of U_r in steps of 1	± 2.5% of U_r
energizing time	(0-1) s in steps of 0,01	± 0.5% ± 10 ms
Operating time	**Value**	
For synchro check function	between 180 and 200 ms (typical 190 ms)	
For energizing check function	between 65 and 95 ms (typical 80 ms)	

1.6 Appendix

1.6.1 Terminal diagrams

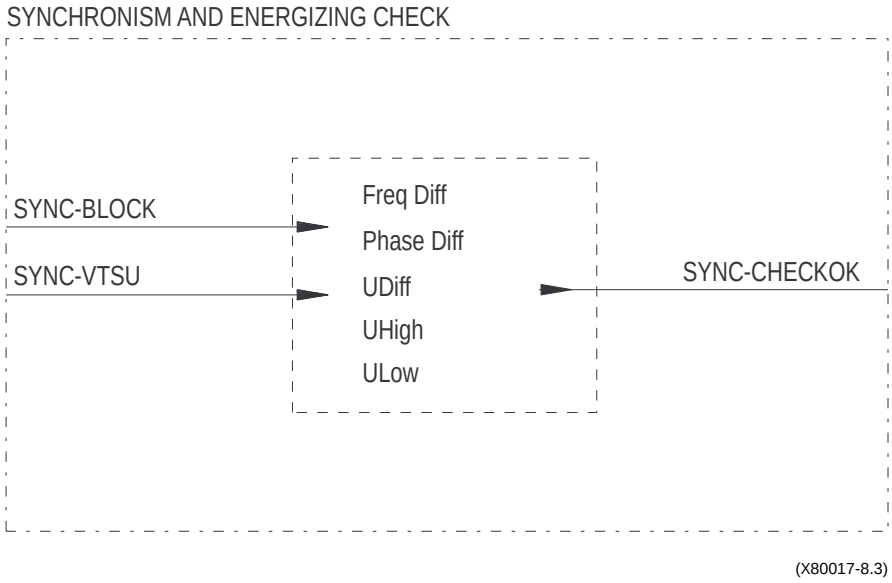

Fig. 9 Simplified terminal diagram of the function.

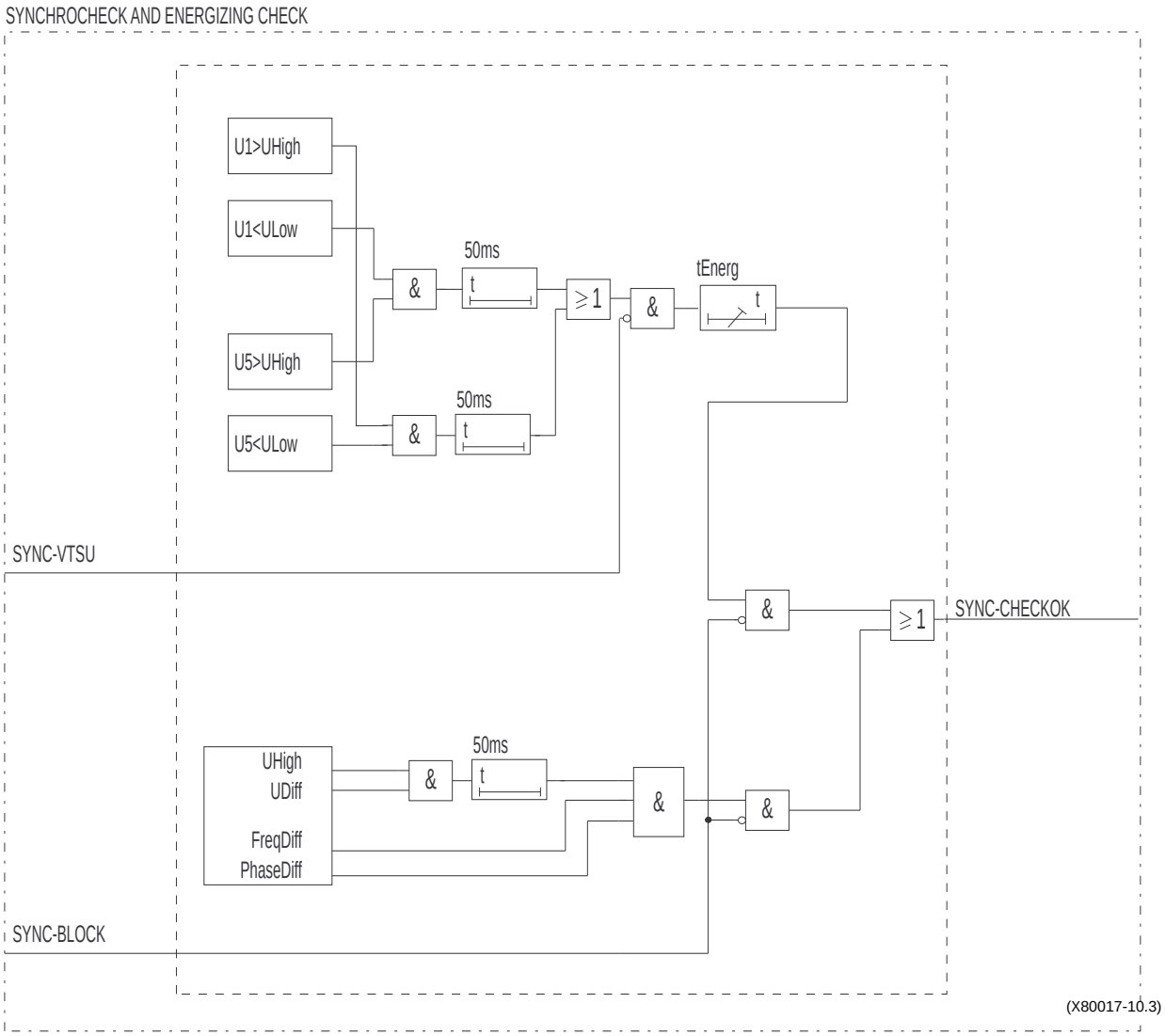

Fig. 10 Terminal diagram of the function.

1.6.2 Signal list

CONNECTIONS:	TO:	SETTING:	DESCRIPTION:
SYNC-BLOCK	BI		Block of synchronism and energizing -check.
SYNC-VTSU	BI		Detection of a fuse failure condition by a fuse failure supervision function
PRODUCTION:	**TO:**	**SETTING:**	**DESCRIPTION:**
SYNC-CHECKOK	BO		Synchro-check / Energizing OK

1.6.3 Setting table

PARAMETER:	SETTING RANGE:	SETTING ACTUAL				DESCRIPTION:
		Group 1	Group 2	Group 3	Group 4	
Operation	Off / Release / On					Function execution
Input Phase	L1 / L2 / L3 L1-L2 / L2-L3 / L3-L1					Voltage reference selection (phase-earth) Voltage reference selection (phase-phase)
Energizing	Off DLLB DBLL Both					Energizing check not in use Dead line/Live bus Dead bus/Live line DLLB or DBLL
UHigh	(70 - 100)% of U_r					High voltage limit
ULow	(10 - 80)% of U_r					Low voltage limit
FreqDiff	0,05 - 0,30 Hz					Frequency difference limit
PhaseDiff	5 - 75 deg					Phase difference limit
UDiff	(5 - 50)% of U_r					Voltage difference limit
tEnerg	0,00 - 1,00 s					Energizing period