Contents *Page*

1 INSTALLATION AND COMMISSIONING 2

1.1 Installation 2
1.1.1 Receiving 2
1.1.2 Storage 2
1.1.3 Mechanical installation 2
1.1.4 Electrical Connections 8
1.1.5 Fibre optic connections 11

1.2 Setting and configuration 12
1.2.1 Built-in man machine interface (MMI) 12
1.2.2 Front Communication 12
1.2.3 Remote Communication, SMS or SCS 13
1.2.4 Configuration of inputs and outputs 14

1.3 Commissioning 15
1.3.1 Test of internal circuits 16
1.3.2 Secondary injection test 16
1.3.3 Check of external connections 16
1.3.4 Functional test 17
1.3.5 Test termination 17

1.4 Fault tracing 17
1.4.1 Using information on the built-in MMI 17
1.4.2 Using front connected PC or SMS 19

1.5 Repair instruction 21

1.6 Maintenance 21

1 INSTALLATION AND COMMISSIONING

1.1 Installation

1.1.1 Receiving

Remove the protection terminal from its transport case and perform a visual inspection of any possible transport damages. Check that the delivered protection terminal has the correct data on the rating plate at the front of the terminal, i.e., rated current, rated voltage, and rated dc voltage.

1.1.2 Storage

If the terminal is to be stored before installation, this must be done in a dry and dust-free place, preferably in its original transport case.

1.1.3 Mechanical installation

This protection is built in the mechanical packaging system described in Buyer's Guide 1MRK 500 009-BEN (former document number 1MDB14007-EN).

Depending on how the protection is to be mounted, a suitable mounting kit is used. For 19" rack mounting, flush mounting, semi-flush mounting and wall mounting, mounting kits containing all parts needed for the mounting, including screws and an assembly instruction, can be ordered. See item 5 in this User's Guide, for more details.

Dusty, damp places, or such that are liable to rapid temperature variations, powerful vibrations or shocks should be avoided.

19" rack installation

For mounting the protection terminal in a 19" rack, mounting angles, one for each side, are needed. There are different types of mounting angles depending on the size of the terminal.

Each mounting angle can be mounted on either side of the protection. Mount the angles on the protection terminal with the screws included according to the drawing below. All screws included have grips of type TORX T20.

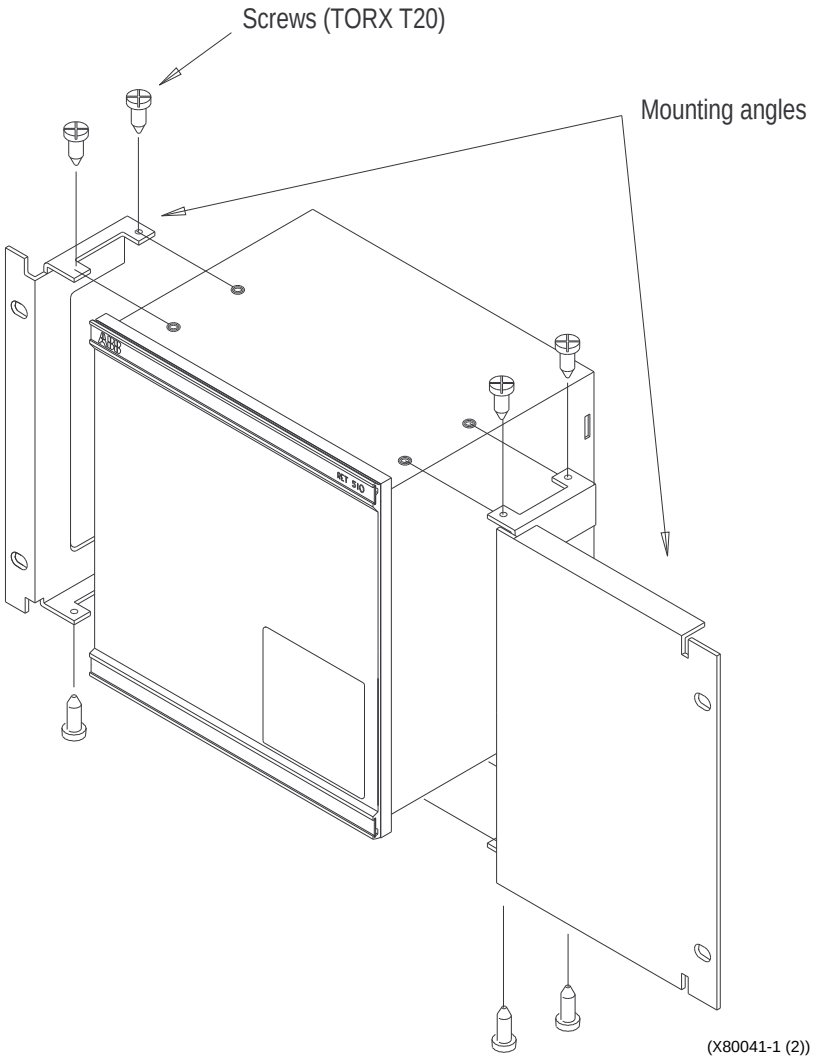

Fig. 1 19” rack mounting.

If more than one terminal is to be placed side-by-side, special “side-by-side” mounting kits are needed. They consist of two plates and screws with grips of type TORX T20.

First, fasten the mounting angles, one on each terminal, with the screws included. Then make fast the terminals together, with the two plates, one on top of the two terminals and one on the bottom, according to the drawing below.

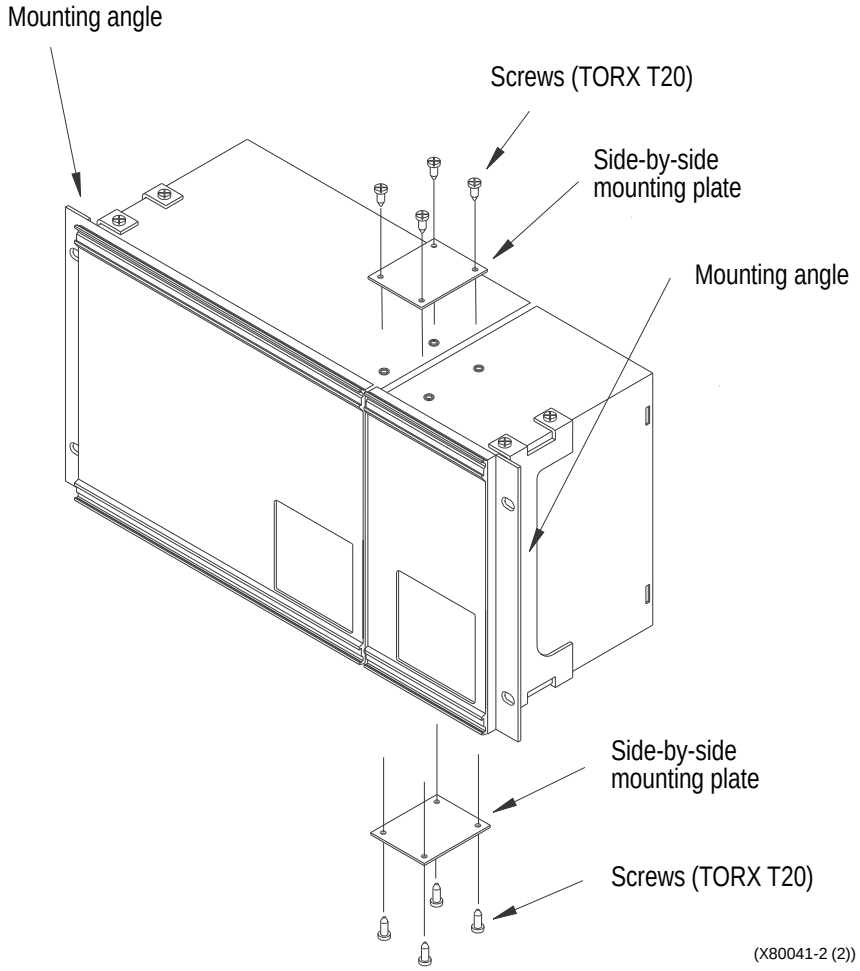

Fig. 2 Side-by-side mounting

Flush/Semi-flush mounting

For flush mounting, proceed in the following way:

- Cut and affix the sealing strip, if IP 54 is required (option).
- Put the protection terminal in the cut-out.
- Fasten the side holders to the back part of the protection terminal with the small screws (grip type TORX T10).
- Fix the protection terminal with the big screws (grip type TORX T25).

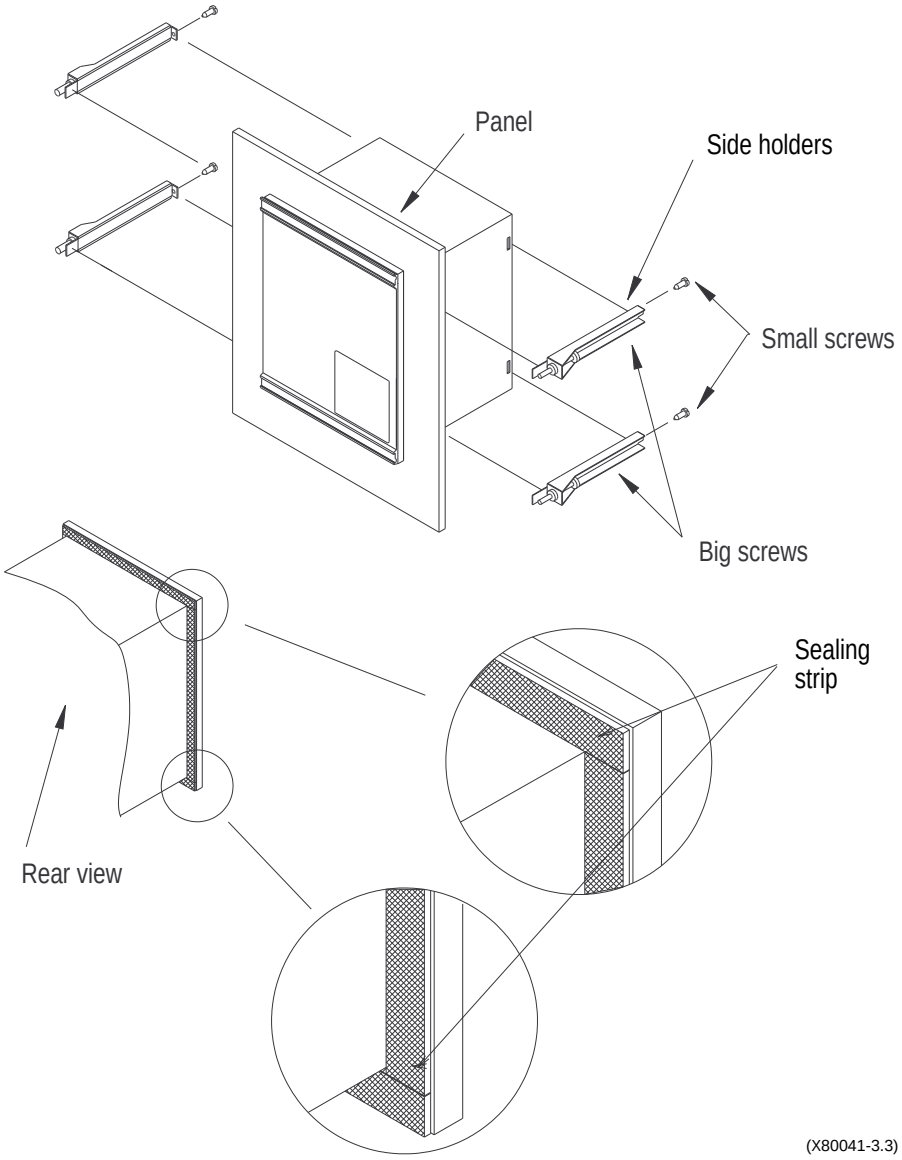

Fig. 3 Flush mounting

For semi-flush mounting, a distance frame is to be mounted around the protection terminal before placing the terminal in the cut-out.

Proceed at flush mounting.

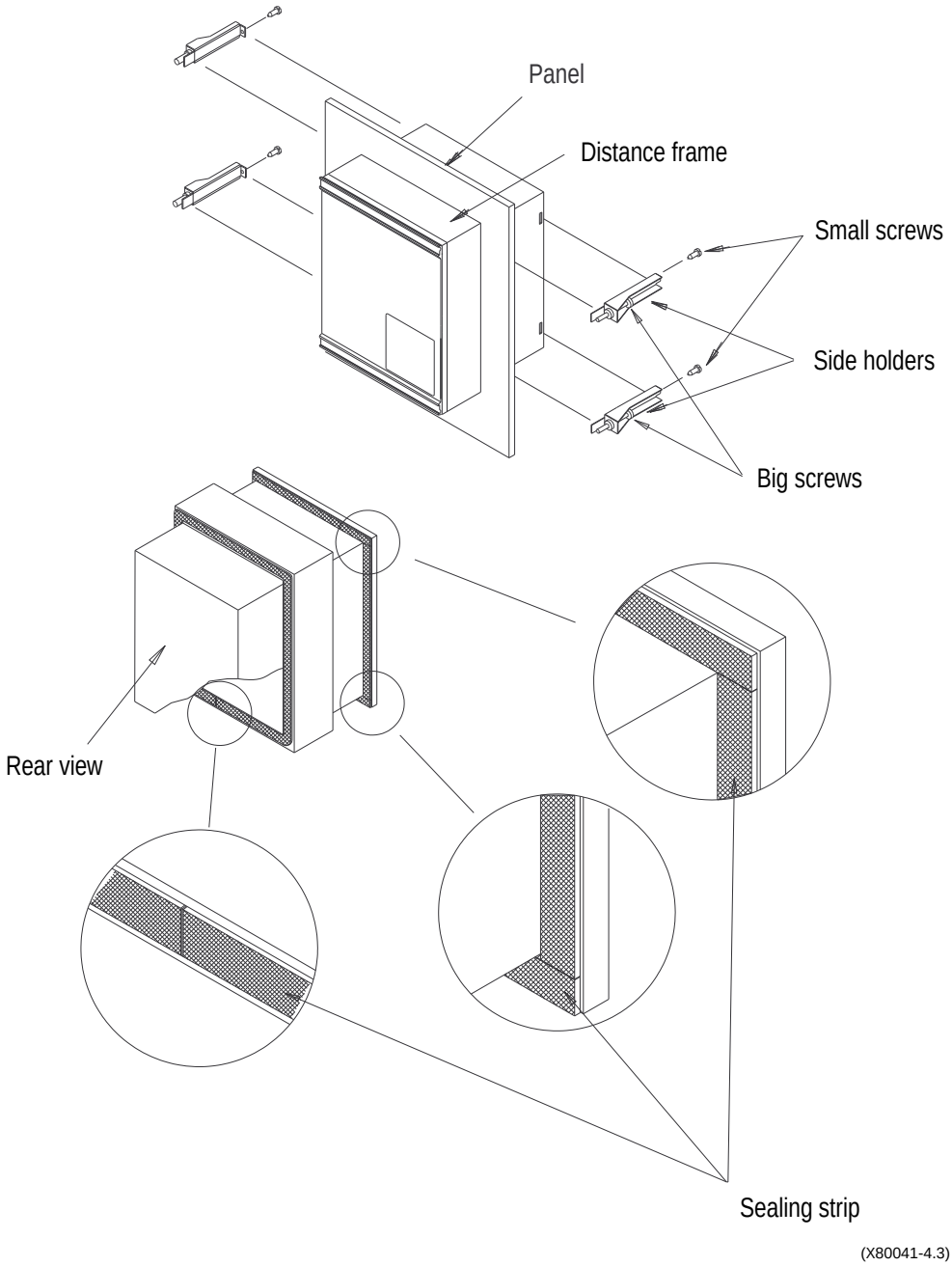

Fig. 4 Semi-flush mounting

Wall mounting

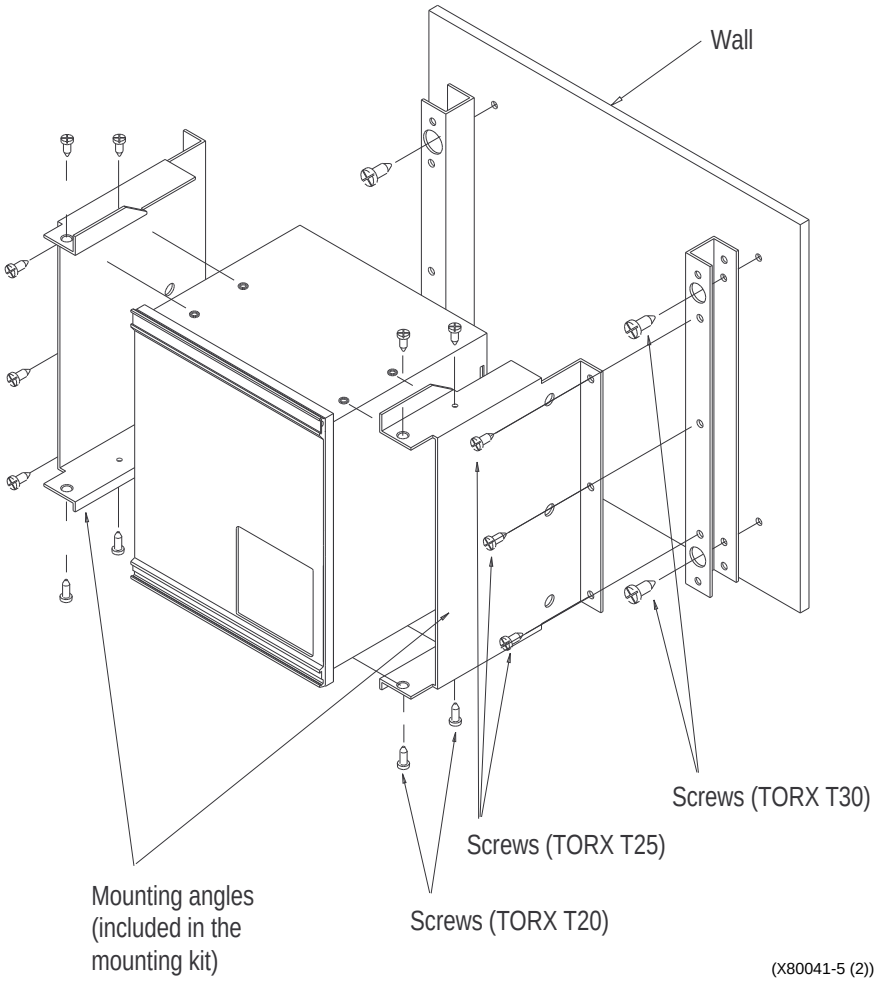

Fig. 5 Wall mounting

The screws included have grips of type TORX:

- T20 to attach the mounting angles to the case
- T25 to attach the mounting angles to the mounting bars
- T30 to attach the mounting bars to the wall (M6)

1.1.4 Electrical Connections

The external connections should be made on the screw terminals according to the terminal diagram.

All connectors on the protection have an identification number, for example X11. The female connectors can be marked the same way by the user. The individual terminals are numbered from top to bottom: 1, 2, 3, ... (see a signal connector in Fig. 7). At installation, all wiring on the female part of the connector can be performed before plugging it into the male part, on the relay.

The cables from the current and voltage transformers should be identified with regards to phases and connected to the proper terminal, according to the terminal diagram.

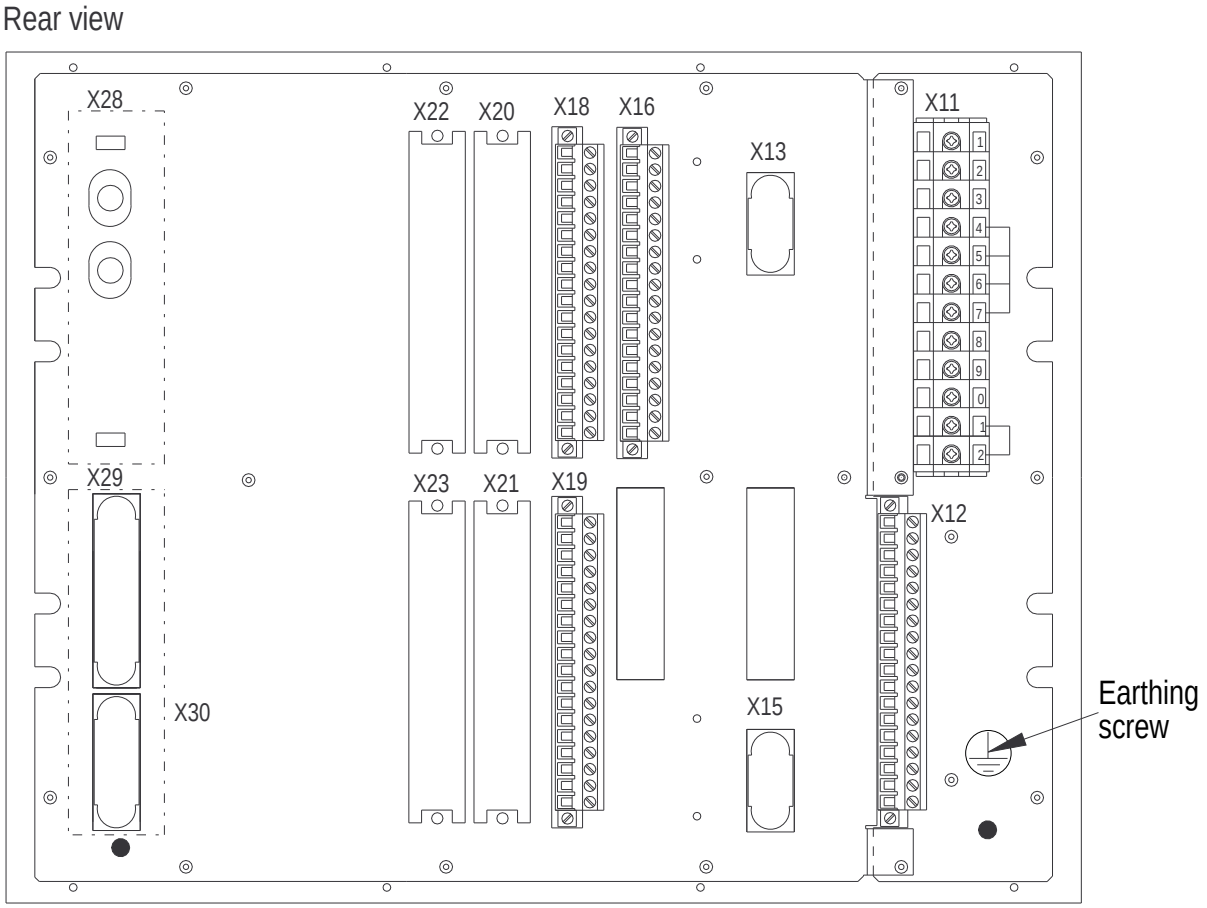

Fig. 6 Rear view of REL 561.

A typical rear view of a product (REL 561) is shown in Fig. 6.

NOTE! The use of terminals for external connections is product-specific and it can be found in the terminal diagram for each product. A list of designations for different connectors, valid for most products, is shown below:

X11	current inputs
X12	voltage inputs
X13 and X15	rear connectors for the bus connection modules (SMS or SCS)
X16	belongs to the power supply and binary I/O module
X18	input connector for the optional binary in/out module No. 1
X19	output connector for the optional binary in/out module No. 1
X20	input connector for the optional binary in/out module No. 2
X21	output connector for the optional binary in/out module No. 2
X22	input connector for the optional binary in/out module No. 3
X23	output connector for the optional binary in/out module No. 3
X24	input connector for the optional binary in/out module No. 4
X25	output connector for the optional binary in/out module No. 4
X26	input connector for the optional binary in/out module No. 5
X27	output connector for the optional binary in/out module No. 5
X28	connector for the optical communication module in REL 561
X29	connector for the galvanic communication module in REL 561 according to V.36, RS530
X30	connector for the galvanic communication module in REL 561 according to X.21.

(Note that the max. No. of optional binary in/out-modules depends on the type of protection)

The current carrying connector X11 can have cables of an area of up to 4 mm^2.

Safety and EMC earthing

To fulfill safety regulations and to get a full EMC protection, a separate earthing wire must be connected. The wire shall be connected from the earthing screw (grip type TORX T20) on the rear of the terminal (see Fig. 6), to the panel earthing bar. The wire area must be atleast 2,5 mm^2 and the wire as short as possible.

NOTE! If National electric safety regulations and laws differ from the above mentioned, they must be followed.

Signal connectors

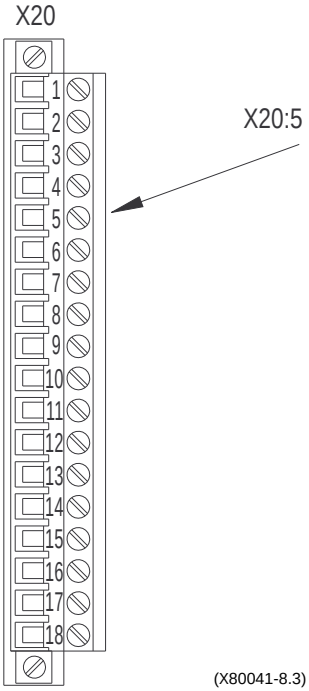

Fig. 7 Signal connector

The terminals are numbered from 1 to 18, from top to bottom. The marked connection point in the example above is designated X20:5.

The conductors can be either of rigid type (solid, stranded) or of flexible type.

If only one conductor is applied in the same connection point, it can be 0,2-2,5 mm^2, and if two conductors are applied in the same socket, they can be 0,2-1 mm^2 each. If two conductors of 1,5 mm^2 each are to be applied, a ferrule is used. This ferrule (ABB Relays' order no 1MKC 840 003-4 or Phoenix type AI-TWIN 2 · 1,5 - 8 BK) is applied with crimping pliers type ZA3 from Phoenix, (see Fig. 8 below).

No soldering is needed.

If a COMBITEST test switch is added, COMBIFLEX wires are used, see Buyer's Guide 1MDB13003-EN.

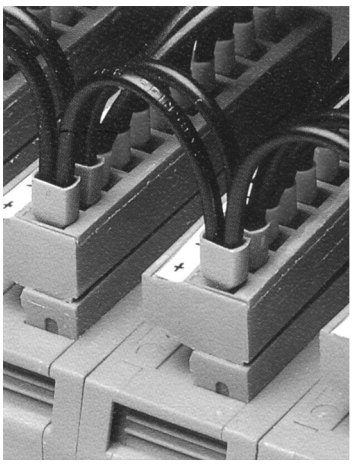

(X80041-9b.2)

Fig. 8 Connected cables with ferrules.

1.1.5 Fibre optic connections

On each terminal, one or two optical ports can be equipped with fibre optic bus connection module type SPA-ZC 21. These are mounted on port X13 and/or X15 (see Fig. 6) The fibres connected can be of either plastic, with a snap-in connection, or of glass, with a bayonet connection.

The two SPA-bus channels are referred to as Channel A and Channel B, where Channel A is located on X13 and Channel B on X15.

When a PC is connected to the front of the protection terminal, Channel B is interrupted. Channel A is continuously connected to the protection terminal and can communicate also when the front port is active.

One connection is used for receiving and one for transmitting data. They are distinguished by the colour of their fibre contact. Receiver fibre contacts (blue for plastic, dark grey for glass) have to be plugged into receiver sockets (blue for plastic, dark grey for glass). Transmitter fibre contacts (grey or black) have to be plugged likewise into transmitter sockets (grey or black). It is important that the correct fibre contact is plugged into the correct socket.

Fibre optical cables are sensitive to mechanical damages. The most important thing to have in mind when handling fibres is that they must not be bent. As for the curvature radius, the following minimum values are valid:

- 5 cm radius for plastic fibre
- 15 cm radius for glass fibre.

When the optical fibre is to be connected or disconnected, the termination, and not the optical fibre itself, must be used for pulling.

In case the optical fibre is too long and cable straps have to be used, the cable strap must not be applied too hard. There should always be some space between the optical fibre and the cable strap.

1.2 Setting and configuration

All settings and configuration can be made in three ways:

- Locally, via the built-in Man machine interface (MMI) unit
- Locally, on a PC via the optical front connector
- Locally or remotely, via one of the two optical SPA-bus ports on the rear (in SMS or SCS).

1.2.1 Built-in man machine interface (MMI)

See “Man machine interface”, item 6, and its appendix with the MMI tree in this User’s Guide for more information.

The setting access on the built-in MMI can be blocked by the binary input signal MMI--BLOCKSET. When this signal is active, the LEDs can still be cleared from the front.

1.2.2 Front Communication

When a PC is used for connection to the front, the software needed is SMS-BASE and SM/REx 5xx, (SM/REL 511 for REL 511, SM/REL 521 for REL 521 etc.). (For the collection of disturbances to a front connected PC, RECOM is not required since all necessary functionality is built-in to SM/REx 5xx.)

When communicating with a PC, the setting of slave number and baud rate (communication speed) must be equal in the program and in the terminal. For further instructions how to set these parameters in the PC program, see the User’s Guide of SMS-BASE and of the SM/REx 5xx.

The setting of slave number and baud rate of the terminal is done on the built-in MMI at:

Configuration
SPA Comm
Front

See the User’s Guide of SM/REx 5xx for further instruction of the program.

The activation of the front port is somewhat different whether the option “Remote communication” is installed in the terminal or not.

“Remote communication” installed in the terminal

When the front port is used, it has to be activated on the built-in MMI at:

Front Comm

Activate (and Deactivate, when disconnecting the PC)

If the front port is not deactivated after the communication, it will be deactivated automatically 30 minutes after the last communication. When the front port is activated, Channel B at the rear will be disconnected until the front communication is deactivated. Channel A is, however, always open to the protection.

The activation is blocked by the binary input signal MMI--BLOCKSET, which blocks the built-in MMI. This means that this signal indirectly also blocks the front connected PC communication.

“Remote communication” not installed in the terminal

The front port is always active, so no special activation is needed. The binary input signal MMI--BLOCKSET does not affect the front communication to the PC.

1.2.3 Remote Communication, SMS or SCS

Setting can be performed via either of the optical ports at the rear of the protection. When a PC is connected to the SMS system, the programs SMS-BASE and the appropriate SM/REx 5xx modules are used. For the collection of analogue data to a PC, RECOM is also required in the PC. Setting can also be done via the SCS system based on MicroLIBRARY.

For all setting and configuration via the optical ports on the rear, it is necessary to set the Setting Restrictions at “Open” for the communication port in question. Otherwise, no setting is allowed via the communication port. This parameter can only be set on the local MMI, and is located at:

Configuration

SPAComm

Channel A or Channel B

SettingRestrict

It is also possible to allow changes between active setting groups with “ActGrpRestrict” in the same menu section.

When communicating with SMS or SCS, the setting of slave number and baud rate (communication speed) must be equal in the computer program and in the terminal. For further instructions how to set these parameters in the SMS, see the User’s Guide of SMS-BASE and of the SM/REx 5xx.

The setting of slave number and baud rate of the terminal is done on the built-in MMI at:

Configuration
SPA Comm
Channel A or Channel B

The bus connection module SPA-ZC 21 has five switches that must be set according to Fig. 6 in “Construction and hardware characteristics”, item 5 in this User’s Guide.

1.2.4 Configuration of inputs and outputs

The protection terminal has a default configuration for all functions, i.e. there is a default “internal wiring” of the terminal. Also all input and output contacts are “wired” to functions in the protection terminal. This default configuration can be found in item 11 of this User’s Guide, “Terminal diagram and default configuration”.

The configuration can be changed on the built-in MMI or via PC/SMS. On the built in MMI, the configuration is done at:

Configuration
Function Inputs, Binary Outputs and Binary Inputs

The procedure is described in “Man machine interface”, item 6, in this User’s Guide.

The binary outputs are selectable from a signal list where the signals are grouped under their function names. It is also possible to state a user-defined name for each input and output signal.

For more detailed information on the input and output signals, see each function description with their appendices in item 7 and 8 in this User’s Guide.

1.3 Commissioning

Before any test takes place, the protection should be set at TestMode. This can be done on the built-in MMI at:

Test

Test Mode

Operation

Test/Mode/Operation = On sets the terminal in test mode, but this is not activated until being saved. The yellow LED starts to flash when the test mode setting is saved. The test mode can also be activated via a binary input connected to “TEST-INPUT”. Select the Operation above to BinInput in that case.

When TestMode is set to On (Test/Mode/Operation = On), the yellow LED flashes and the setting of the Disturbance report parameters have the following impact:

Operation = Off DisturbSummary = Off

- Disturbances are not stored.
- LED information is not shown on the MMI and not stored.
- No Disturbance summary is scrolled on the MMI.

Operation = Off DisturbSummary = On

- Disturbances are not stored.
- LED information (yellow - start, red - trip) are shown on the built-in MMI, but not stored in the terminal.
- Disturbance summary is scrolled automatically on the built-in MMI for the two latest recorded disturbances, until cleared. The information is not stored in the terminal.

Operation = On DisturbSummary = Off or On

- The Disturbance report works as in normal mode.
- Disturbances are stored. Data can be read from the built-in MMI, a front connected PC or SMS.
- LED information (yellow - start, red - trip) is stored.
- Disturbance summary is scrolled automatically on the built-in MMI for the two latest recorded disturbances, until cleared.
- All disturbance data stored during test mode will be remained in the terminal when changing back to normal mode.

1.3.1 Test of internal circuits

The A/D conversion module, the power supply and binary In/Out module, the main processing module, including all DSPs, and the binary In/Out modules are continuously supervised and internal signals present the result (OK, Warning or Failure). If an internal fault is detected, this is indicated on the built-in MMI. In the front connected PC or SMS, the fault creates an event in the internal event list.

The power supply is supervised continuously and if a failure occur, or if the internal signal INT--FAIL is activated, a special output contact on the power supply and binary In/Out module is activated (Internal fail).

1.3.2 Secondary injection test

Secondary injection testing is a normal part of the commissioning work. The operating value of all functions should be checked by secondary injection. The test set should be able to provide a three-phase supply of voltages and currents. Furthermore, the magnitude of voltage and current, and the phase angle between voltage and current must be variable. The voltages and currents from the test set must be obtained from the same source and they must have a very small harmonic contents. If the test set can not indicate the phase angle, a separate phase angle meter is required.

The time-lag elements do not have to be switched off to record the operating characteristic for the different zones, as operation for each zone can be read as indications on the MMI.

Note that this protection terminal is designed for a maximum continuous current of four times the nominal current.

1.3.3 Check of external connections

When a line protection terminal is to be taken into service, it is of prime importance to check that the intended voltages and currents reach the relay. The phase sequence should also be checked and each phase identified in both the voltage and the current circuits.

All screw terminals should be firmly tightened.

COMBITEST test switch RTXP 24

The protection terminal can be equipped with a test switch of type RTXP 24. The test switch and its associated test plug handle (RTXH 24) are a part of the COMBITEST system, which is described in Buyer's Guide 1MDB12006-EN.

When the test handle is inserted into the test switch, all current circuits on the transformer side are short-circuited and all voltage circuits opened, except for terminal 1 and 12 which are used for DC supply of the protection. The testing equipment connected to the test handle will automatically be connected to the relay.

The test handle can be plugged into the test switch or withdrawn from the test switch to the intermediate position. In this position the trip circuits are blocked, but the voltage and current circuits are connected to the relay. The test handle can be plugged into the test switch or removed from the test switch completely by releasing the top and bottom latches.

1.3.4 Functional test

All functions included are tested according to the test instructions in each function description.

1.3.5 Test termination

When the whole test is finished, the protection terminal should be reconfigured into normal operating mode on the built-in MMI at:

Test
Test Mode
Operation

Set Test/Mode/Operation = Off and save the test mode setting. The yellow LED goes out.

1.4 Fault tracing

1.4.1 Using information on the built-in MMI

If an internal fault has occurred, information can be found on the built-in MMI under:

Terminal Status
Self Superv

Here, there are indications of internal failure (serious fault), or internal warning (minor problem).

There are also indications regarding the faulty unit, according to the table below.

Table 1: Self Supervision signals

MMI information	Status	Signal Name	Activates summary signal	Description
InternFail	OK / FAIL	INT--FAIL		Internal fail summary
Intern Warning	OK / WARNING	INT--WARNING		Internal warning summary
CPU-mod-Fail	OK / FAIL	INT--CPUFAIL	INT--FAIL	Main processing module failed
CPU-mod-Warning	OK / WARNING	INT--CPUWARN	INT--WARNING	Main processing module warning (failure of clock, time synch., fault locator or disturbance recorder)
ADC-mod-ule	OK / FAIL	INT--ADC	INT--FAIL	A/D conversion module failed
I/O-mod-uleB	OK / FAIL	INT--IOB	INT--FAIL	Power supply and binary I/O module failed
I/O-module1	OK / FAIL	INT--IO1	INT--FAIL	Optional binary In/Out module No. 1 failed
I/O-module2	OK / FAIL	INT--IO2	INT--FAIL	Optional binary In/Out module No. 2 failed
I/O-module3	OK / FAIL	INT--IO3	INT--FAIL	Optional binary In/Out module No. 3 failed
I/O-module4	OK / FAIL	INT--IO4	INT--FAIL	Optional binary In/Out module No. 4 failed
I/O-module5	OK / FAIL	INT--IO5	INT--FAIL	Optional binary In/Out module No. 5 failed
I/O-diff	OK / FAIL	INT--IODIFF	INT--FAIL	Communication module for the line differential protection failed
Real Time Clock	OK / WARNING	INT--RTC	INT--WARNING	Internal clock is reset - Set the clock
Time Sync	OK / WARNING	INT--TSYNC	INT--WARNING	No time synchronisa-tion
Trip Circuit	OK / WARNING	INT--TRIPSUPV	INT--WARNING	Status of the external trip circuit super-vision relay SPER
Diff com-munic	OK / WARNING	INT--DIFFCOM	INT--WARNING	Differential communi-cation status

The internal signals, such as INT--FAIL, INT--WARN, etc., can also be connected to binary output contacts for signalling to a control room.

In the Terminal Status information, it is possible to see the current information from the Self supervision function. Indications of failure or warnings for each hardware module are provided, as well as information about the external time synchronisation and the internal clock, according to the Table 1 above. Recommendations are given on measures to be taken, in order to correct the fault. Loss of time synchronisation can be considered as a warning only. The protection terminal has full functionality without time synchronisation.

1.4.2 Using front connected PC or SMS

Here two summary signals appear, “Self supervision summary” and “CPU-module status summary”. These signals can be compared to the internal signals as:

- Self supervision summary = INT--FAIL and INT--WARNING
- CPU-module status summary = INT--CPUFAIL and INT--CPUWARN

When an internal fault has occurred, extensive information about the fault can be retrieved from the list of internal events available in the TERM-STS Terminal Status part of the PC program. A time-tagged list with the date and time of the last 40 internal events is available here.

The internal events in this list do not only refer to faults in the terminal, but also to other activities, such as change of settings, clearing of disturbance reports and loss of external time synchronisation.

The following events are logged as Internal events:

Event message		Description	Generating signal
INT--FAIL	Off	Internal fail status	INT--FAIL (reset event)
INT--FAIL	■On		INT--FAIL (set event)
INT--WARNING	Off	Internal warning status	INT--WARNING (reset event)
INT--WARNING	■On		INT--WARNING (set event)
INT--CPUFAIL	Off	Main processing module fatal error status	INT--CPUFAIL (reset event)
INT--CPUFAIL	■On		INT--CPUFAIL (set event)
INT--CPUWARN	Off	Main processing module non-fatal error status	INT--CPUWARN (reset event)
INT--CPUWARN	■On		INT--CPUWARN (set event)
INT--ADC	Off	A/D conversion module status	INT--ADC (reset event)
INT--ADC	■On		INT--ADC (set event)
INT--IOB	Off	Power supply and binary I/O module status	INT--IOB (reset event)
INT--IOB	■On		INT--IOB (set event)
INT--IO1	Off	Binary In/Out module No 1 status	INT--IO1 (reset event)
INT--IO1	■On		INT--IO1 (set event)
INT--IO2	Off	Binary In/Out module No 2 status	INT--IO2 (reset event)
INT--IO2	■On		INT--IO2 (set event)
INT--IO3	Off	Binary In/Out module No 3 status	INT--IO3 (reset event)
INT--IO3	■On		INT--IO3 (set event)
INT--IO4	Off	Binary In/Out module No 4 status	INT--IO4 (reset event)
INT--IO4	■On		INT--IO4 (set event)
INT--IO5	Off	Binary In/Out module No 5 status	INT--IO5 (reset event)
INT--IO5	■On		INT--IO5 (set event)
INT--IODIFF	Off	Communication module status	INT--IODIFF (reset event)
INT--IODIFF	■On		INT--IODIFF (set event)
INT--RTC	Off	Real Time Clock (RTC) status	INT--RTC (reset event)
INT--RTC	■On		INT--RTC (set event)
INT--TSYNC	Off	External time synchronisation status	INT--TSYNC (reset event)
INT--TSYNC	■On		INT--TSYNC (set event)
DREP-MEMUSED	■On	>80% of the disturbance recording memory used	DREP-MEMUSED (set event)
SETTING CHANGED		Any settings in terminal changed	
DISTREP CLEARED		All disturbances in Disturbance report cleared	

The events in the Internal event list are time tagged with a resolution of 1 ms.

This means that using PC for fault tracing does not only give information on the module that should be changed, but also on the sequence of faults, if more than one unit is faulty, as well as on the exact time of the occurrence of the fault.

1.5 Repair instruction

When a module in any of the protection terminals is in need of repair, the whole terminal can be taken out and sent to ABB.

An alternative to this can be to disassemble the terminal and send only the faulty circuit board to ABB for repair. When a printed circuit board is transported to ABB, it must always be placed in a metalized shielding bag (closest to the card) which is ESD-proof (electrostatic discharge). It is also possible to purchase loose modules for replacement.

Please note that all safety rules of the power company must be followed.

Before starting the work with disassembling the terminal, please bear in mind the consequences of the ESD phenomenon. Most electronic components are sensitive to electrostatic discharge, and latent damage may occur, unless measures are taken. In order to prevent this, an ESD wrist strap must be used. Furthermore, there must be a semi-conducting cover on the workbench, which must be connected to earth.

The terminal is disassembled in the following way:

- switch off the DC supply
- short circuit all current inputs and disconnect all voltage connectors
- disconnect all signal connectors
- unscrew the remote bus communication modules SPA-ZC 21
- unscrew the main back plate of the terminal
- if the transformer module is to be changed - unscrew also the small back plate of the terminal
- pull out the module that needs repair
- when the new module is pushed in, check that the springs on the card rail have connection to the corresponding metallic area on the circuit board.
- assemble the module.

1.6 Maintenance

The protection terminal is self supervised. No special maintenance is required.

It is however necessary to follow the instructions of the power company and other maintenance directives valid for the maintenance of the power system.