Contents *Page*

1 LOSS OF POWER SYSTEM VOLTAGE 2

1.1 Application 2

1.2 Theory of operation 2

1.3 Setting 3

1.4 Testing 3
1.4.1 General 3
1.4.2 Testing of the loss of power system voltage 4

1.5 Technical data 5

1.6 Appendix 5
1.6.1 Terminal diagrams 5
1.6.2 Signal list 6
1.6.3 Setting Table 7

1 LOSS OF POWER SYSTEM VOLTAGE

1.1 Application

All three phase voltages are checked in order to initiate a trip and/or an alarm when all phase voltages have been low for more than 7 seconds. The tripping of a circuit breaker at prolonged loss-of-voltage is normally used in automatic restoration systems to facilitate the system restoration following a major blackout.

1.2 Theory of operation

A simplified block diagram for the loss of power system voltage function is shown in Fig. 1. Digital signal processors perform a check of all three phase voltages. If all of them are low for more than 7 seconds, the signal SSUP-TRLV will change to a logical one for 150 ms. After this, the logic will remain blocked until normal voltage conditions will be established on the line for at least three seconds.

The connectable signal SSUP-VTSU can block the loss of power system voltage logic. It is normally necessary to configure it to the output signal of the fuse failure supervision function FUSE-VTSU.

The logic will also remain blocked for at least three seconds after the circuit breaker has been closed. It is therefore necessary to connect the NC contact of the circuit breaker to one of the binary inputs, and configure it to the SSUP-BC.

The logic will also get blocked if only one or two phase voltages remain low for more than 10 seconds.

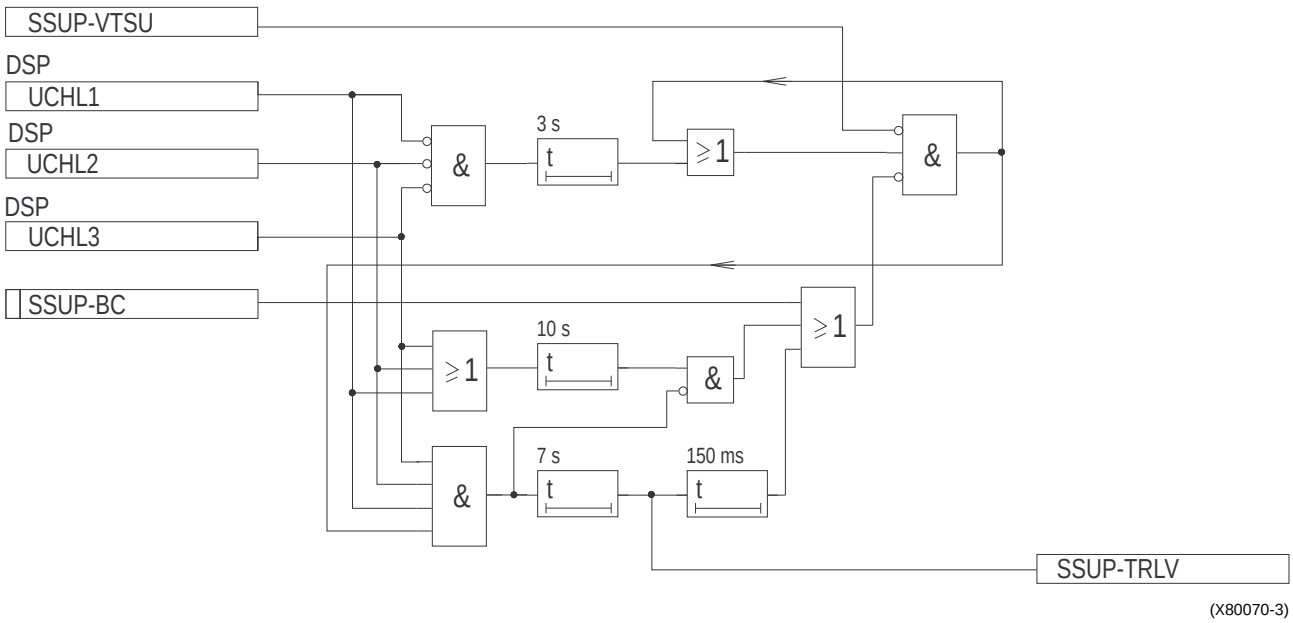

Fig. 1 Loss of power system voltage- Simplified logic diagram.

1.3 Setting

The set value of the operating level for the loss of power system voltage function is the same as for the undervoltage protection function and therefore settable under the menu:

Settings
Functions
Group n
UnderVoltage

The voltage criteria for the loss-of-voltage supervision function must be set lower than the system operating voltage. It is necessary to consider an additional 10% safety margin during the setting calculations.

1.4 Testing

1.4.1 General

The operating values of the current and voltage measuring elements and corresponding functions have to be checked during the commissioning as well as during regular maintenance tests. ABB Relays recommends, although it does not absolutely request, the use of testing equipment of type RTS 21 (FREJA) for purposes of secondary injection testing.

The test equipment used should be capable of providing an independent three-phase supply of voltages and currents to the tested terminal. Furthermore, it must be possible to change the values of voltages, currents and phase angles between the measuring quantities, independent of each other, for each phase separately. The test voltages and currents should have a common source, with a very small content of higher harmonics. If the test equipment can not indicate the phase angles between the measured quantities, a separate phase angle meter will be needed.

Before testing, it is necessary to connect the testing equipment according to the valid terminal diagram of the particular REB 551 terminal. Special attention should be paid to the correct connection of the input and output current terminals, and to the connection of the residual current.

1.4.2 Testing of the loss of power system voltage

The following steps are necessary for the testing of the loss of power system voltage function:

1.1 Set the operation of the fuse-failure supervision function at Off mode

Settings
Functions
Group n
FuseFailure

1.2 Simultaneously increase the measured three-phase voltages for at least 10 seconds to their rated value. Note the signal SSUP-TRLV. It should be equal to logic 0.

1.3 Disconnect instantaneously the voltage in all three phases and note the signal SSUP-TRLV. It should appear approximately 7 seconds after the voltage has been switched off. Its duration should be approximately 150 ms.

1.4 Increase the measured voltages instantaneously to their rated values and decrease them again to zero within an interval shorter than 3 seconds. No SSUP-TRLV signal should appear.

1.5 Increase the measured voltages to their rated values for at least 10 seconds. Disconnect one phase instantaneously and, after a time longer than 10 seconds, also the remaining two phases. No SSUP-TRLV signal should appear.

1.6 Increase the measured voltages to their rated values for at least ten seconds. Connect a nominal DC voltage to the binary input SSUP-BC. Disconnect instantaneously all three voltages from the terminal. No SSUP-TRLV signal should appear.

1.7 Disconnect the DC voltage from the SSUP-BC binary input.

1.8 Set the operation of the fuse failure supervision function (if built into the terminal) to “On” mode. Increase the measured voltages to their rated values for at least ten seconds. Disconnect the voltage in one phase and approximately half a second later also in the remaining two phases. No SSUP-TRLV signal should appear.

1.9 Increase the measured voltages to their rated values for at least ten seconds. Decrease simultaneously all three voltages to a value which is at least 10% higher than the set operating value (settings are performed under the undervoltage protection function). Decrease in small increments all three voltages simultaneously and wait between each increment for at least 8 seconds until the signal SSUP-TRLV appears on the corresponding binary output or on the local MMI unit. Record the measured operating voltage and compare it with the set value.

1.5 Technical data

Table 1: Loss of power system voltage

Function	Setting range
loss of power system voltage function time delay	(20-80)% of U_r in *) steps of 1% 7 s, fixed

*) Voltage check function and the corresponding setting is common for the following functions:
- undervoltage protection

1.6 Appendix

1.6.1 Terminal diagrams

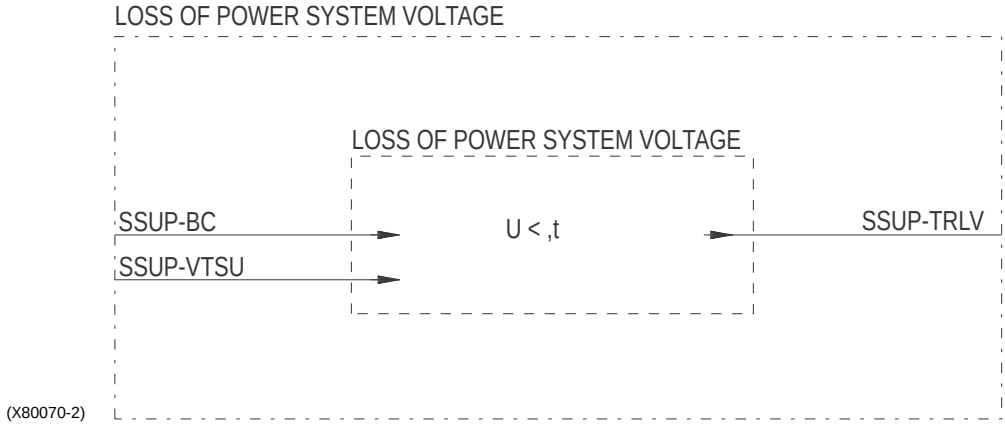

Fig. 2 Simplified terminal diagram of the function.

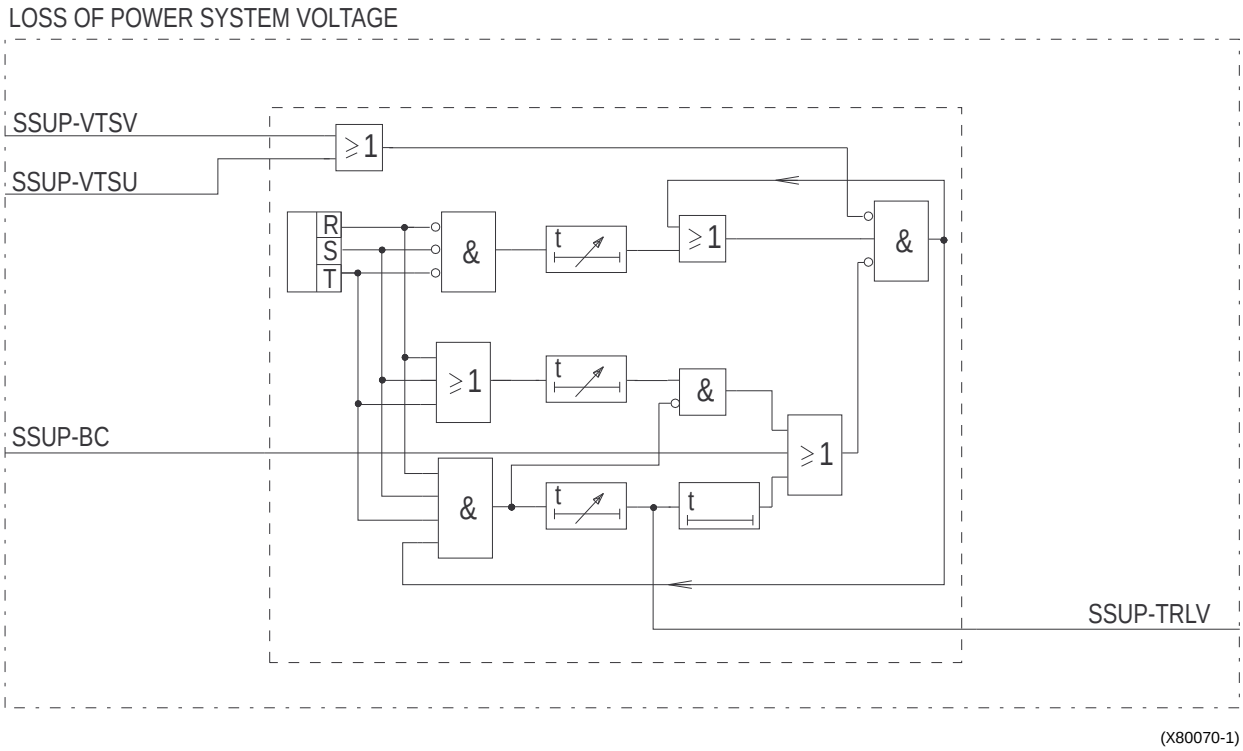

Fig. 3 Terminal diagram of the function.

1.6.2 Signal list

CONNECTIONS:	**TO:**	**SETTING:**	**DESCRIPTION:**
			Loss of power system voltage
SSUP-BC	BI		Information on the closed position of a circuit breaker
SSUP-VTSU	FUSE		Signal block the operation of a operation of a loss of power system voltage function. It should normally be configured to the FUSE-VTSU output of the fuse failure function.
PRODUCTION:	**TO:**	**SETTING:**	**DESCRIPTION:**
SSUP-TRLV	BO,TRIP		Output signal from the loss of power system voltage function

1.6.3 Setting Table

CONNECTIONS:	**TO:**	**SETTING:**	**DESCRIPTION:**
			Loss of power system voltage
SSUP-BC	BI		Information on the closed position of a circuit breaker
SSUP-VTSU	FUSE		Signal block the operation of a operation of a loss of power system voltage function. It should normally be configured to the FUSE-VTSU output of the fuse failure function.
PRODUCTION:	**TO:**	**SETTING:**	**DESCRIPTION:**
SSUP-TRLV	BO,TRIP		Output signal from the loss of power system voltage function