Contents *Page*

1 ON-LINE CONTROL FUNCTION 2
1.1 Application 2
1.2 Design 2
1.3 Configuration 4
1.4 Testing 5
1.5 Appendix 5
1.5.1 Terminal diagrams 5
1.5.2 Signal list 7

1 ON-LINE CONTROL FUNCTION

1.1 Application

The REx 5xx terminals may be provided with output functions that can be controlled either from Substation Control System (SCS) or Station Monitoring System (SMS). The outputs from SCS can be used e.g. to control circuit breakers. For simple control functions, e.g. for ac in control rooms, also the SMS can be used. Together with the configuration logic circuits, the user can govern pulses or steady output signals for control purposes.

1.2 Design

Ten control function blocks for output signals, as shown in Fig. 1, are available in the REx 5xx terminal. These signals can be set from SCS and SMS to the values “Off”, “On”, “Pulse 20 ms” or “No change”. The signal values, here CON--SIG1 to CON--SIG10, are then available for configuration to built-in functions or via the configuration logic circuits to the binary outputs of the terminal.

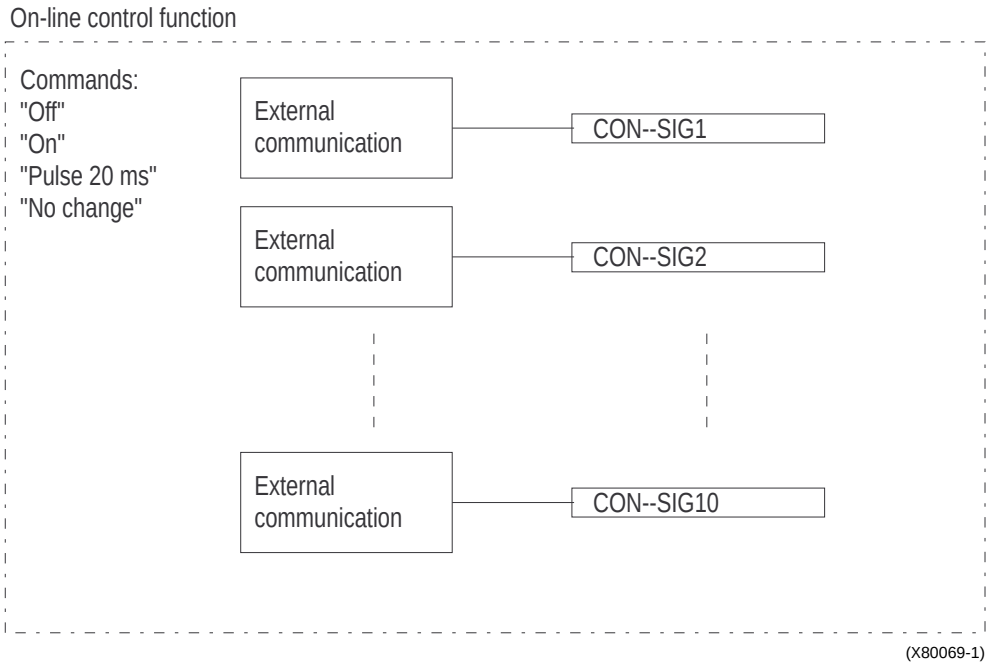

Fig. 1 Block diagram for output signals as built into the REx 5xx terminals

For the breaker terminal REB 551 forty more output signals are available CON--SIG11 to CON--SIG50, providing capacity for more control operations.

From the SCS all fifty signals can be accessed. From the SMS only ten signals are accessable. In this software version no signals are accessable from the built-in MMI.

The control function can be connected according to the application examples in Fig. 2 to Fig. 4.

Fig. 2 shows an example how the user can connect the control function via the configuration logic circuit to control a circuit breaker. This type of control function is normally performed by a pulse via the binary outputs of the terminal. The figure shows a close operation, but an open operation is performed in a corresponding way without the synchro check condition.

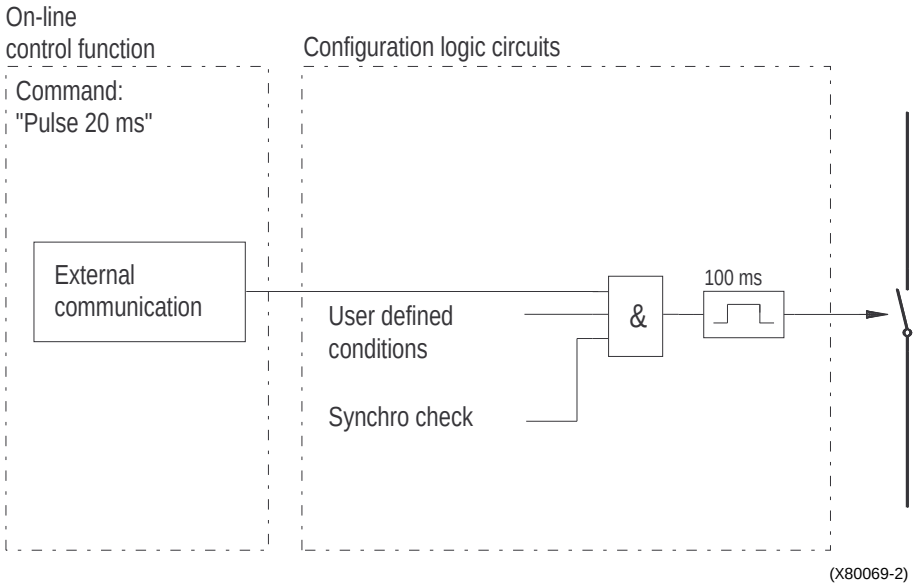

Fig. 2 Application example showing a logic diagram for control of a circuit breaker via configuration logic circuits.

Fig. 3 and Fig. 4 shows other ways to control functions which require steady signals “On” and “Off”. The output can be used to control built-in functions or external equipment.

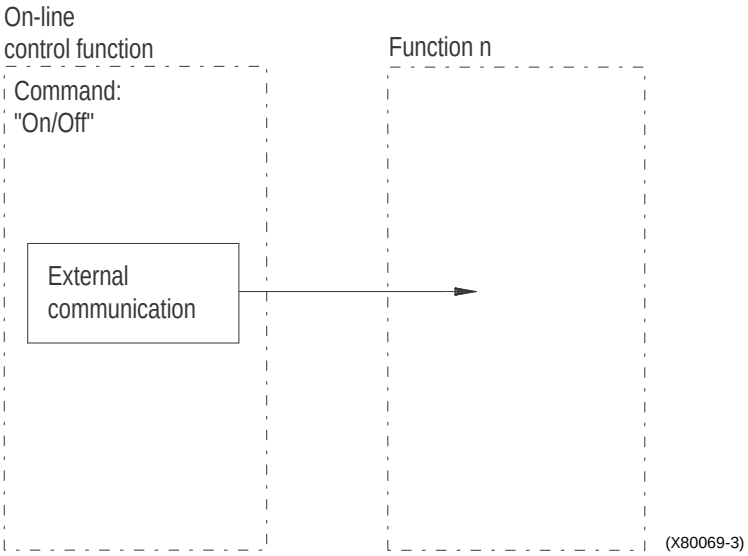

Fig. 3 Application example showing a logic diagram for control of built-in functions.

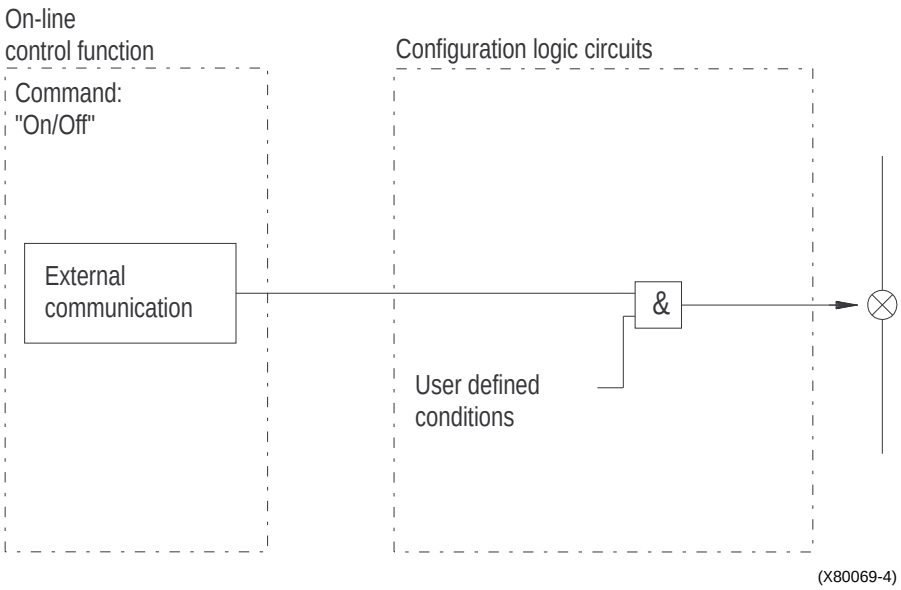

Fig. 4 Application example showing a logic diagram for control of external equipment via configuration logic circuits.

1.3 Configuration

Configuration of the signal outputs of the control function to the inputs of the configuration logic circuits is made in the built-in MMI under the menu:

Configuration
FunctionInputs
LogicAND (OR, TM, TP)
Control

The connectable outputs of the control function can of course also be connected directly to the binary outputs of the terminal or to built-in functions.

MMI tree for configuration to binary outputs:

Configuration
Binary Outputs
I/O module n
Control

MMI tree for configuration to a built-in function:

Configuration
FunctionInputs
Function n
Control

1.4 Testing

For each control function block it is necessary to configure the output signal to corresponding binary output of the terminal. The operation of each separate block is then checked from SMS by applying the commands “Off”, “On”, “Pulse 20 ms” or “No change” and observing the logic statuses of the corresponding binary output.

Control function blocks included in the operation of different built-in functions must be tested at the same time as their corresponding functions.

1.5 Appendix

1.5.1 Terminal diagrams

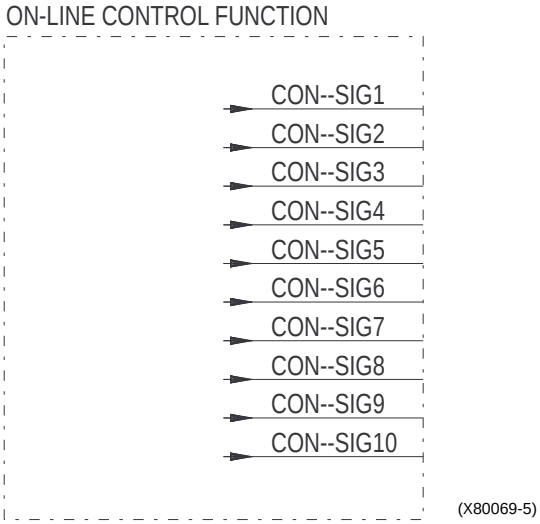

Fig. 5 Simplified terminal diagram of the function in the REx 5xx terminal.

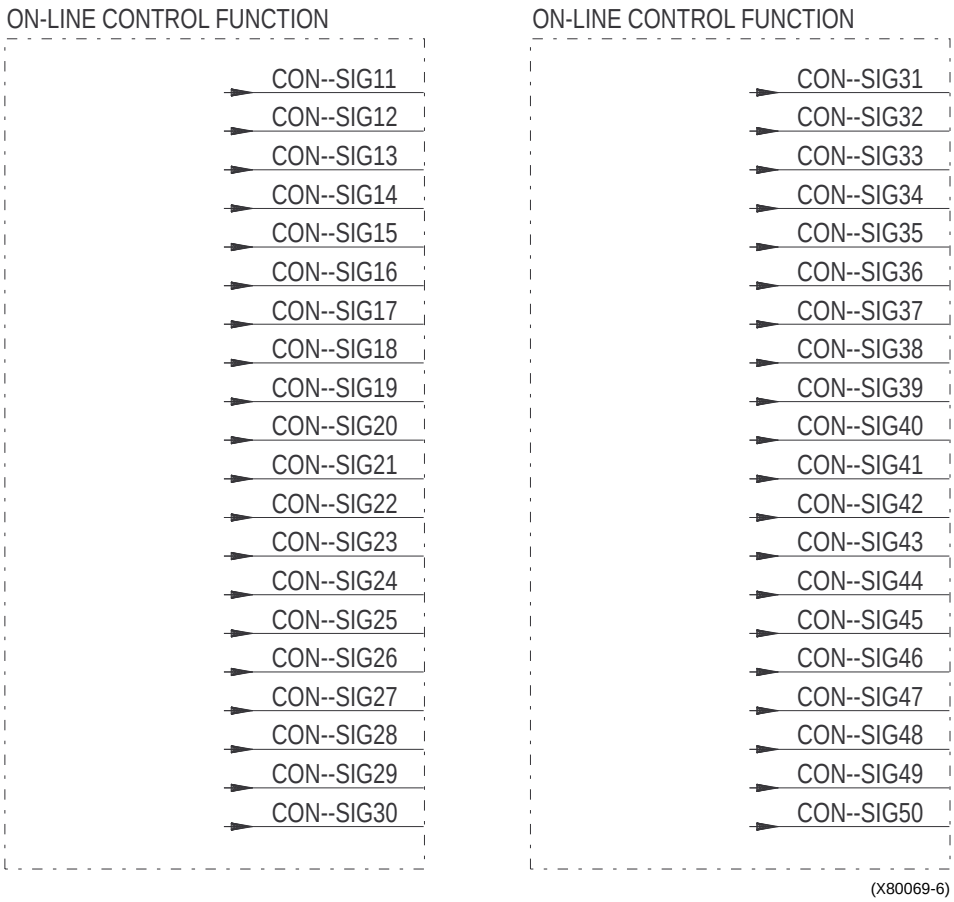

Fig. 6 Simplified terminal diagrams of the function in the REB 551 terminal.

1.5.2 Signal list

On-line control function - production signals

PRODUCTION:	TO:	SETTING:	DESCRIPTION:
CON--SIG#	BO		Binary output from the control function block No. #

= 1 to 10 for REL 5xx
= 1 to 50 for REB 551