Contents *Page*

1 CONSTRUCTION AND HARDWARE CHARACTERISTICS - REB 551 2

1.1 Hardware design 2

1.2 Hardware modules 3
1.2.1 Transformer module 5
1.2.2 A/D-conversion module 5
1.2.3 Main processing module 6
1.2.4 Power supply and binary I/O 7
1.2.5 Man machine interface (MMI) 8
1.2.6 Binary I/O module 9
1.2.7 SPA-bus connection module 11

1.3 Mounting system 12

1.4 Mechanical mounting 12
1.4.1 Rack mounting 12
1.4.2 Flush/Semi-flush mounting 15
1.4.3 Wall mounting 16

1.5 Electrical connections 17

1 CONSTRUCTION AND HARDWARE CHARACTERISTICS - REB 551

1.1 Hardware design

The protection terminal is supplied in a closed case that is 3/4 of a standard 19” rack wide and 6U high.

This protection terminal is made with a technology that fulfils all modern electromagnetic interference requirements. Tests, like fast transient test and radio frequency sensitivity test, are rather new requirements. This is solved by having a closed and welded steel case. The terminal has a very good separation between internal, sensitive signals, and external, “polluted” process signals. This is done by keeping all process signals in the back of the case, (for convenient wiring) and a mother-board (behind the front cover made in one piece), where all sensitive bus communication runs (both analogue parallel and binary serial communication).

All external serial buses for Substation Control System (SCS), Station Monitoring System (SMS) and the front connected personal computer (PC), are isolated with fibre optical links to avoid disturbances. This, in combination with a good design of transformers, power supply and binary inputs give a terminal, that can withstand the electromagnetic interference tests with a margin.

If a COMBITEST test switch is included, an additional box of a size of 1/4 of a 19” rack is mounted together with the terminal case. When the optional trip-units are used, they are mounted in either a 1/4 or 1/2 size 6U case.

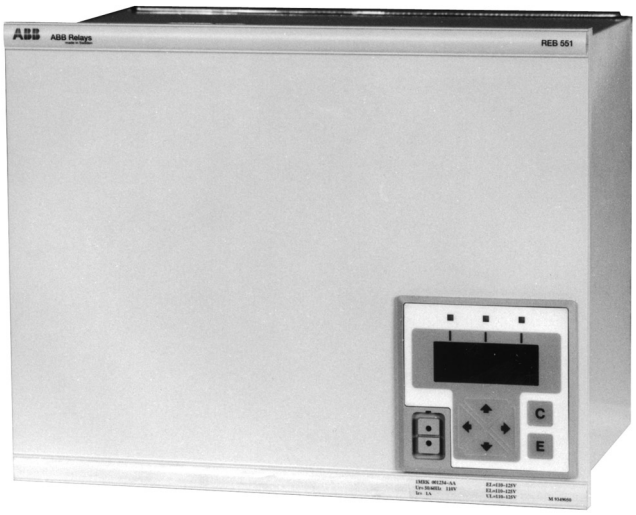

(X80089-1)

Fig. 1 REB 551 protection terminal.

1.2 Hardware modules

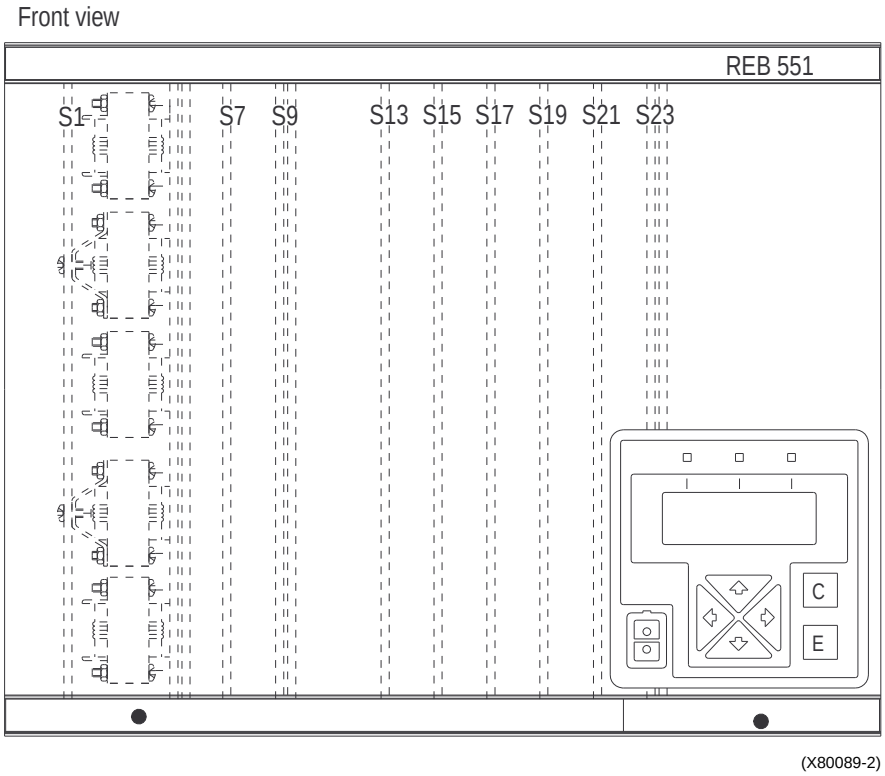

Fig. 2 Hardware structure.

The basic configuration of the protection terminal consists of the following modules:

- Transformer module with five voltage and five current input transformers (position S1).
- A/D-conversion (AD) module for up to 10 analogue inputs, operating with a sampling frequency of 2000 Hz. It has a bandwidth of 250 Hz, and a dynamic range for currents, from 0,01 to 100 · I_r , and for voltages, from 0,01 to 2 · U_r , (position S7).
- Main processing module. All information is processed or passed through this module before it is sent out of the terminal. The module also configures the terminal and stores all its settings. In addition to this communication and man machine interface role, it performs all the measuring functions (position S9).
- Power supply and binary I/O module, which comprises a DC/DC converter, that provides full isolation between the terminal and the external battery system. The power supply consists of a two stage converter which gives a very wide input voltage range, from 36 V up to 300 V. On the same module are also integrated four binary input circuits, together with five output relays (position S13).

- Man machine interface (MMI) is built-in to the front cover and contains three LEDs, six keys, an LCD and an optical connector for a front connected personal computer (PC). This front communication requires a special cable, with an opto-to-RS232 built-in converter, that can be delivered as an option.

- One binary input / output module, consisting of eight binary inputs and twelve output contacts. Two of them are reed contacts (position S17, S19 and S21)

The following hardware modules are available optionally:

- Up to four binary input/output modules, each of them consisting of eight binary inputs and twelve output contacts. Two of the output contacts are of reed type, for signalling purpose only (modules in positions S15, S17, S19, S21 and S23).
- One or two optical serial interface units of type SPA-ZC 21, intended for remote fibre optic communication. They enable the terminal to be a part of SCS and SMS simultaneously (see Fig. 14).
- RTXP 24 test switch. (requires additional 1/4 seize 6U case)
- Single and/or three-phase trip-units, which can be equipped with lock-out relay and trip-coil supervision. These trip-units requires an additional 1/4 or 1/2 seize 6U case.

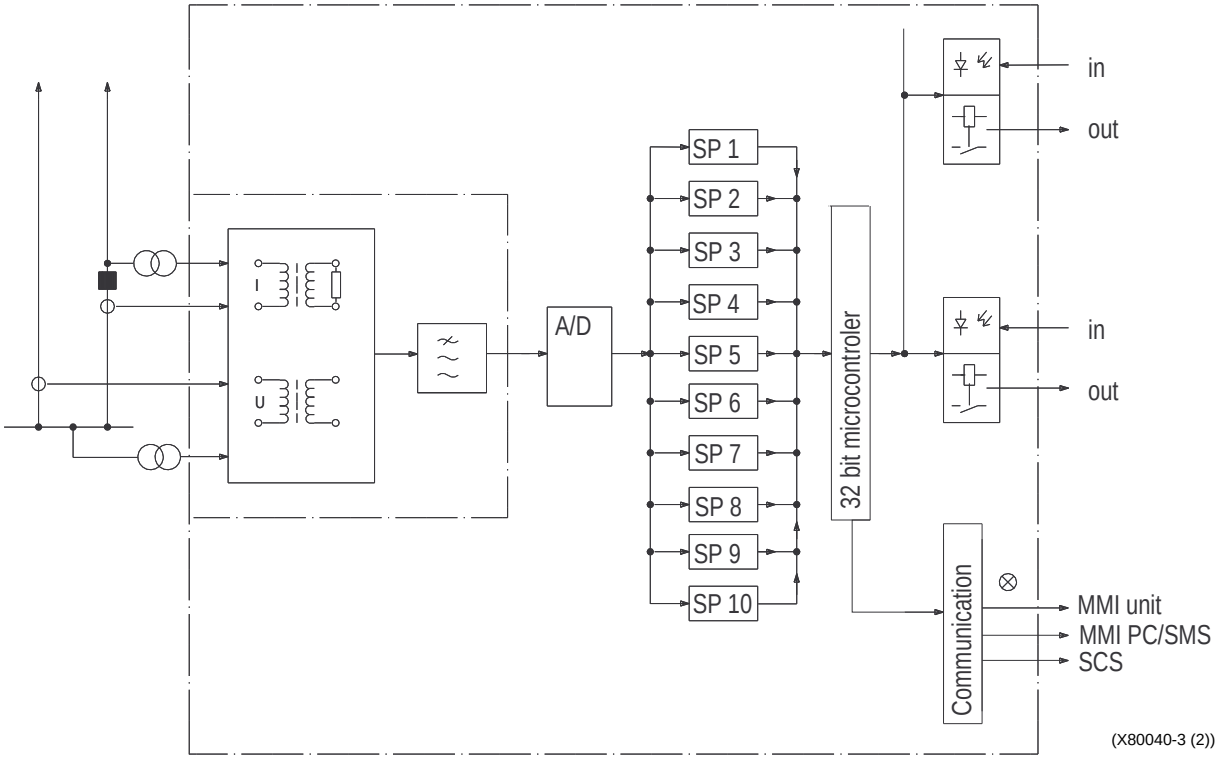

Fig. 3 Basic block diagrams.

1.2.1 Transformer module

Current and voltage input transformers form an isolating barrier between the external wiring and internal circuits of the terminal. They adapt the values of the measuring quantities to the static circuitry and prevent the disturbances to enter the terminal

A total of ten analogue input quantities can be connected to the transformer module consisting of five voltage transformers, covering a rated range from 100 V to 125 V, and five current transformers in two versions, one for 1 A, and one for 5 A rated current. The input quantities are the following:

- Three phase currents
- Residual current of the protected line
- One phase current, used for disturbance recorder
- Three phase voltages
- Phase voltage for reference voltage from busbar1.
- Phase voltage for reference voltage from busbar2.

1.2.2 A/D-conversion module

The incoming signals from the intermediate current transformers are adapted to the electronic voltage level with shunts. To gain dynamic range for the current inputs, two shunts with separate A/D channels are used for each input current. In this way, 16 bits dynamic range is obtained with a 12 bits A/D-converter.

The next step in the signal flow (see Fig. 3), is the analogue filter of the first order, with a cut-off-frequency of 500 Hz. This filter is used to avoid aliasing problems.
The A/D-converter has a 12 bit resolution and samples each input signal (5 voltages and 2 · 5 currents) with a sampling frequency of 2 kHz.
Before the A/D-converted signals are transmitted to the main processing module, the signals are bandpass filtered and down-sampled to 1 kHz in a digital signal processor (DSP).
The filter in the DSP is a numerical second order filter with a cut-off frequency of 250 Hz.
The transmission of data between the A/D-conversion module and the Main processing module, is done on a supervised serial link of RS485 type. This transmission is performed once every millisecond and contains information about all incoming analogue signals.

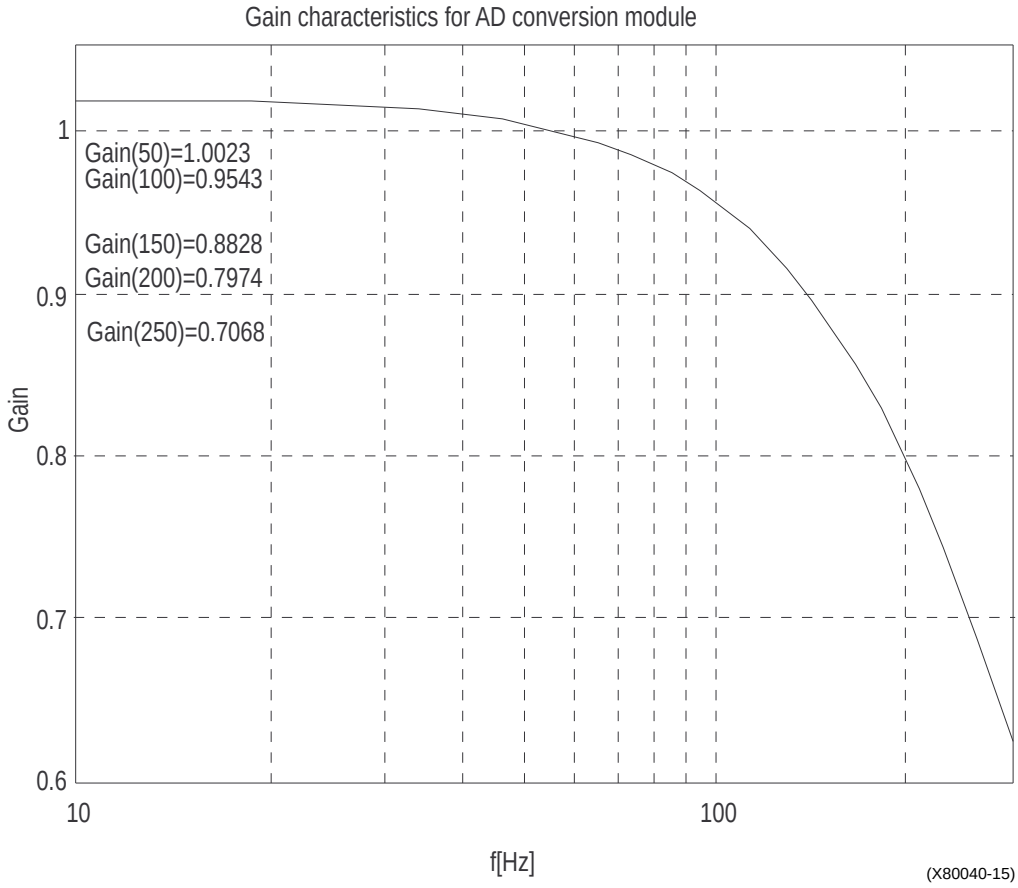

Fig. 4 The filter characteristic of the A/D-conversion module.

1.2.3 Main processing module

The terminal is based on a pipelined multi-processor design. All analogue data is received in all of the up to ten (16 bits) Digital Signal Processors (DSP). In these DSPs, the main part of the filtering and the calculations are being done. The result from the calculations in the DSPs is sent every millisecond on a parallel bus to the (32 bit) main controller. The main controller also serves four serial links: one high speed CAN-bus for Input/Output modules and three serial links for the different types of MMI communication explained below

The main controller makes all decisions, based on the information from DSPs and from the binary inputs. The decisions are sent out to the different output modules and to the three following communication ports:

- to the built-in MMI module including a front connected PC, if any, for local man machine communication
- to the Station Monitoring System SMS (option)
- to the Substation Control System SCS (option)

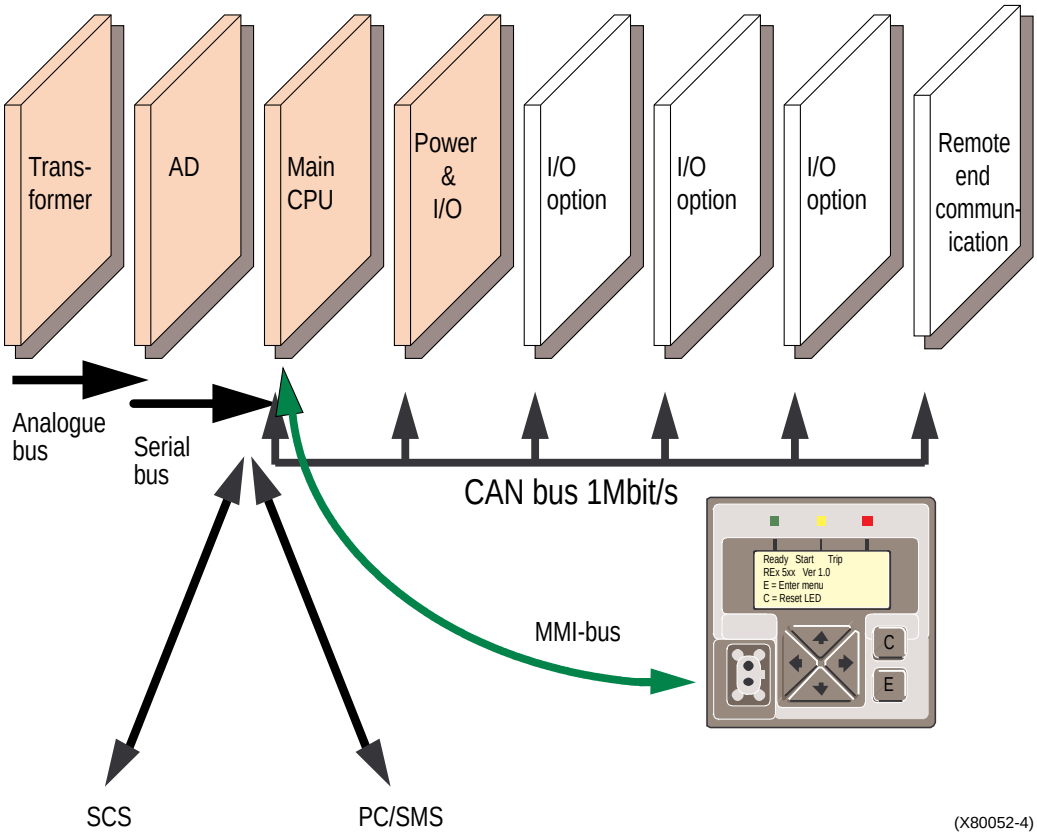

Fig. 5 Internal hardware structure.

1.2.4 Power supply and binary I/O

The Power supply and binary I/O module contains a built-in self-regulated DC/DC converter that provides full isolation between the terminal and the external battery system. The power supply can provide 20 W continuously and approximately 40 W peak. It also includes four binary input contacts and five binary output contacts. Four inputs and four of the output contacts are independently programmable. The fifth output contact is normally closed and continuously connected to the “internal fail” and “loss of auxiliary voltage” signals. All output contacts are of output relay type (see item 4 in this User’s Guide “Requirements and basic technical data - REB 551” 1MDX80088-EN for further contact data). Three of the binary inputs are grouped together, see the terminal diagram in item 11 of this User’s Guide.

The wide input voltage range of the DC/DC converter covers the three normal input voltage ranges in one version i.e. 48 to 60, 110 to 125 and 220 to 250 including a ±20% tolerance on the EL voltage.

The voltage level for the opto isolated inputs is named RL1. This can be different from the voltage level RL2, used for the optional binary I/O modules.

The operating characteristic of the binary inputs can be seen in Fig. 7.

1.2.5 Man machine interface (MMI)

The built-in MMI module consists of three LEDs (red, yellow and green), an LCD display with four lines, each of them with 16 characters, six keys and an optical connector for PC-communication.

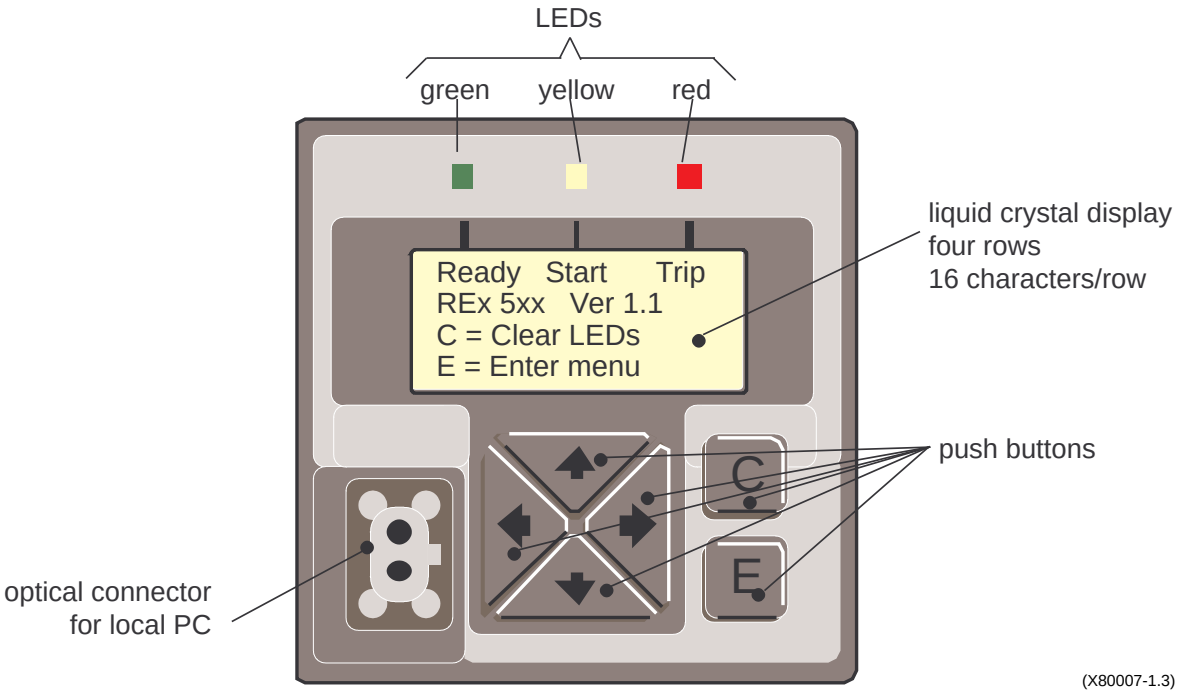

Fig. 6 Built-in MMI.

The PC is connected via a special cable, that has a built-in optical to electrical interface.Thus, disturbance-free local serial communication with the personal computer is achieved. The software required for this communication is named SMS-BASE and SM/REB 551. The use of a PC simplifies to a great extent the communication with the protection terminal, and gives the user some additional functionality which, due to lack of space, is not available on the MMI display. For further information, see Setting and communication, Front communication in “Installation and commissioning” 1MDX80041-EN.

The LEDs on the MMI module give the following information:

Green LED (left):

- steady light — In service
- flashing light — Internal fail, i.e. the internal signal INT--FAIL is high
- dark — No power supply

Yellow LED (middle):

- steady light — A disturbance report has been triggered
- flashing light — The terminal is in test mode

Red LED (right):

- steady light — A protection function has issued a trip command
- flashing light — The terminal is blocked, i.e. the internal signal INT--TERMBLCK is high

1.2.6 Binary I/O module

Up to four binary input/output modules can be added. (one is included in the basic REB 551 hardware) Each module contains eight opto isolated binary inputs and twelve binary output contacts. Ten of the output relays have contacts with a high switching capacity (“Trip and signal relays”) while the remaining two relays are of reed type and for signalling purpose only (see item 4 in this User’s Guide “Requirements and basic technical data - REB 551” 1MDX80088-EN for further contact data). The relays are grouped together as can be seen in the terminal diagram (see item 11 in this User’s Guide).

The binary inputs are freely programmable and can be used for the input logical signals to any of the functions. They can also be included in the disturbance recording and event recording facilities. This enables the extensive monitoring and evaluation of operation for the terminal itself as well as that of all associated electrical circuits.

A great number of signals are available for signalling purposes in the protection terminal, and any of them is freely programmable to operate any of the output relays.

The voltage level of the optional binary I/O modules (RL2) is selectable at order and can be different from the voltage level (RL1) of the Power supply and binary input/output module, but **all optional** binary I/O modules in one protection terminal must have the same voltage level.

RL1 and RL2 can be 24/30 V ±20%, 48/60 V ±20%, 110/125 V ±20% or 220/250 V ±20%. The operating characteristic of the binary inputs of the three voltage levels can be seen in Fig. 7.

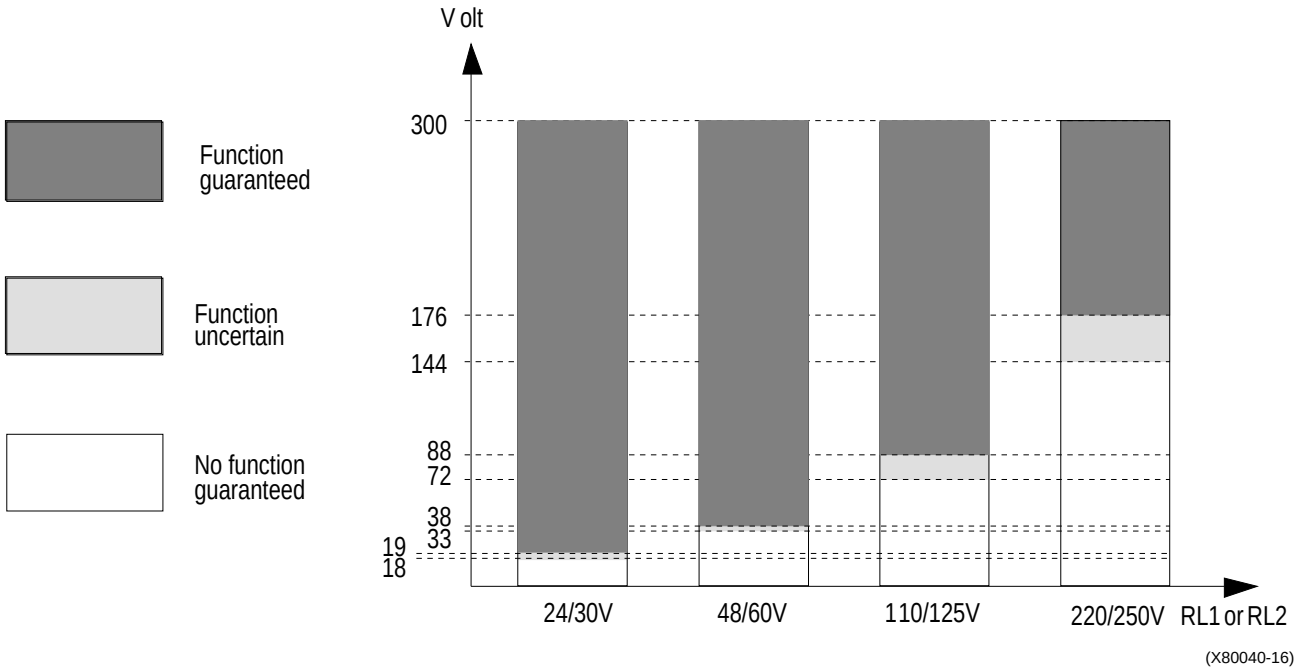

Fig. 7 Voltage dependence for the binary inputs.

The design of all binary inputs is such that it is possible to burn off the oxide of the relay contact connected to the input, in spite of the low steady state power consumption. This can be seen in Fig. 8.

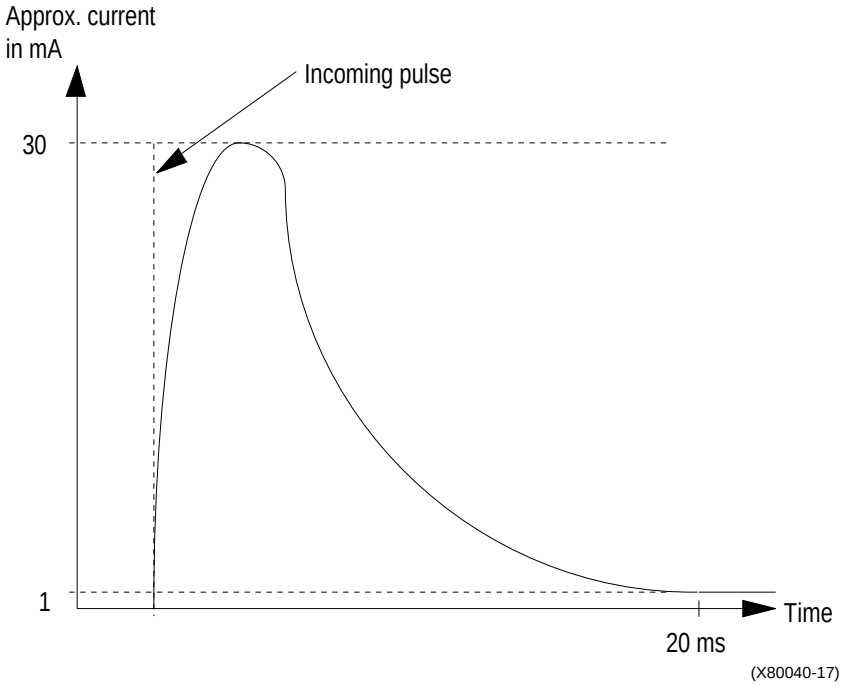

Fig. 8 Current through the relay contact.

1.2.7 SPA-bus connection module

The SPA-bus connection modules used are of type SPA-ZC 21. One or two modules can be applied to the main processing module, on the rear side of the protection terminal (see Fig. 14). This bus connection module is used for communication within SMS and SCS.

The modules are mounted on X13 and X15 (see Fig. 14). The connected fibres can be either of plastic, with a snap-in connection, or of glass, with a bayonet connection.

The incoming optical fibre is connected to the receiver input RX, and the outgoing optical fibre to the transmitter output TX. When the fibre optic cables are laid out, special attention must be paid to the instructions concerning the handling, connection, etc. of the optical fibres (see item “Installation and commissioning”, 1MDX80041-EN).

The SPA-bus connection module can be provided with connectors for two plastic fibre cables, two glass fibre cables, or one of each. The SPA-bus connection module has five switches that in this application must be positioned closed-closed-open-open-closed, counting from pos. 1 to pos. 5.

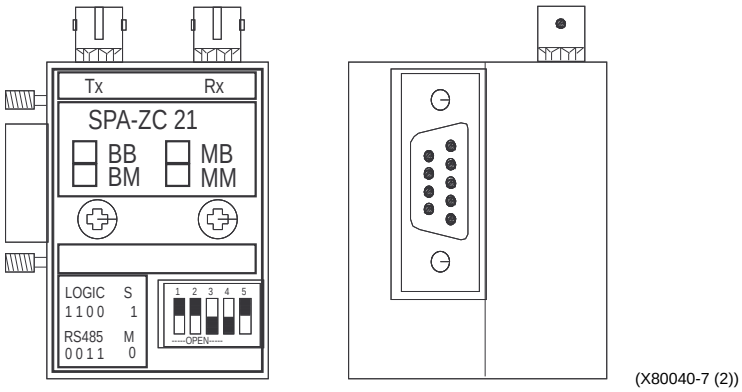

Fig. 9 SPA-ZC 21

The communication channels that use these fibre optic connections are called Channel A (using X13) and Channel B (using X15). When a PC communicates with the front of the protection terminal, Channel B is interrupted.

1.3 Mounting system

The REx 500 series units can be flush, semi-flush, rack or wall mounted with the use of different mounting kits.

Cases of different sizes can also be mounted side-by-side for maximum flexibility in 19” relay panels. All connections are done on the rear side of the cases with a screw-compression type of terminal blocks for electrical connections and snap-in ports for optical connections, using the SPA-bus connector SPA-ZC 21.

The protection level of the terminal is IP 40 on the front side, and IP 54 if a sealing strip is used (to be specified at order). This sealing strip is placed between the front cover and the box. This is done in connection with the production of the relay, which means that it has to be specified at order. The rear side fulfils IP 20.

A protective cover for the rear side of the unit is available to increase the personal security.

1.4 Mechanical mounting

For different types of mountings, special mounting kits are available. All mounting kits contains assembly instructions.

1.4.1 Rack mounting

For mounting the protection terminal in a 19” rack, mounting angles are needed. Depending on the size of the terminal, they differ. Note that two mounting angles are always needed (one at each side). If more than one terminal is to be placed in the same rack, a side-by-side mounting kit is also needed. All necessary screw holes in the box are already prepared.

Rack mounting - Example 1
Only one REB 551 is to be mounted in a rack.

- One Mounting angle for 6U, 3/4 19” rack (1MRK 000 020-BA) with four screws included (TORX T20). A side plate for 1/4 rack is also included.
- One Mounting angle for 6U, 19” rack (1MRK 000 020-CA) with four screws (TORX T20).

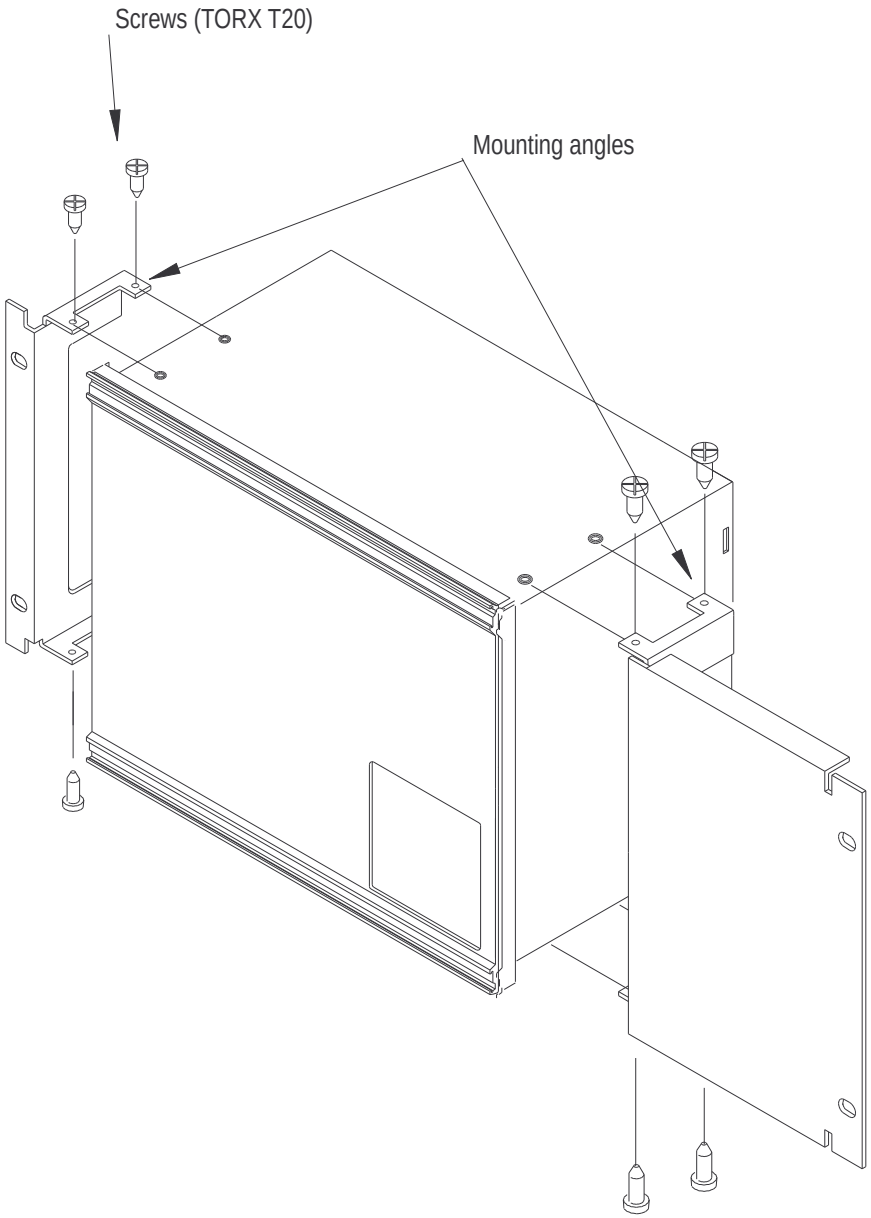

(X80046-2)

Fig. 10 One REB 551 in a 19” rack.

Rack mounting - Example 2

A REB 551, to be mounted with an additional box.

- Two Mounting angles for 6U, 19” rack (1MRK 000 020-CA), each with four screws (TORX T20).
- One Side-by-side mounting kit (1MRK 000 020-Z) with eight screws (TORX T20).

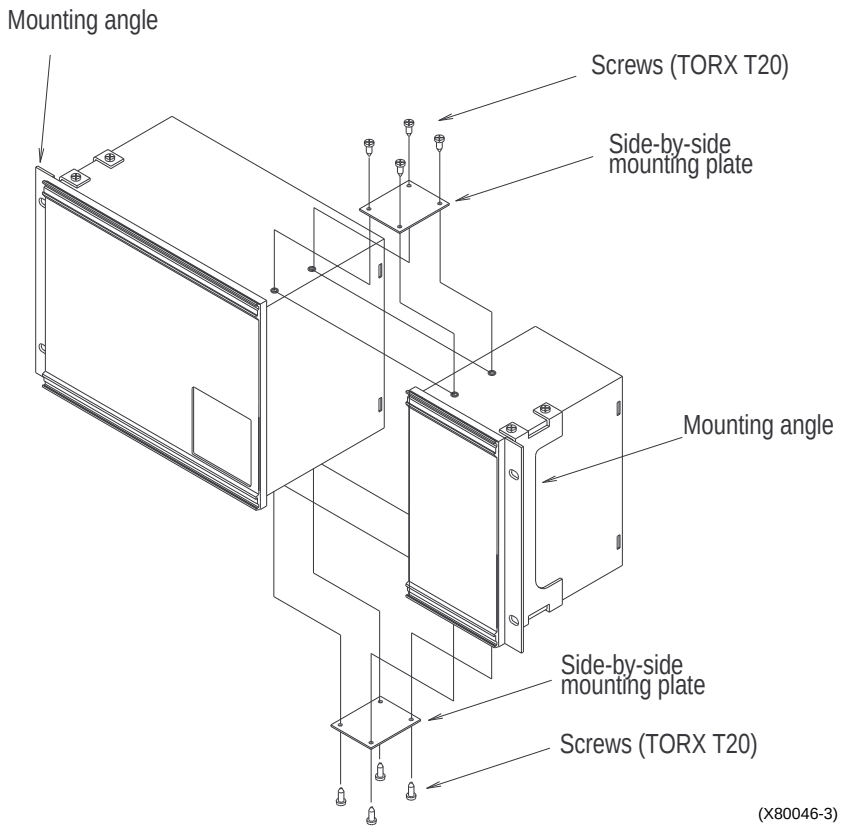

Fig. 11 One REB 551 with additional box.

1.4.2 Flush/Semi-flush mounting

Mounting kits are available for flush mounting and semi-flush mounting. Each mounting kit contains four side holders, four small screws (grip type TORX T10), and four big screws (grip type TORX T25), together with an assembly drawing. The semi-flush mounting kit also contains a steel cover.

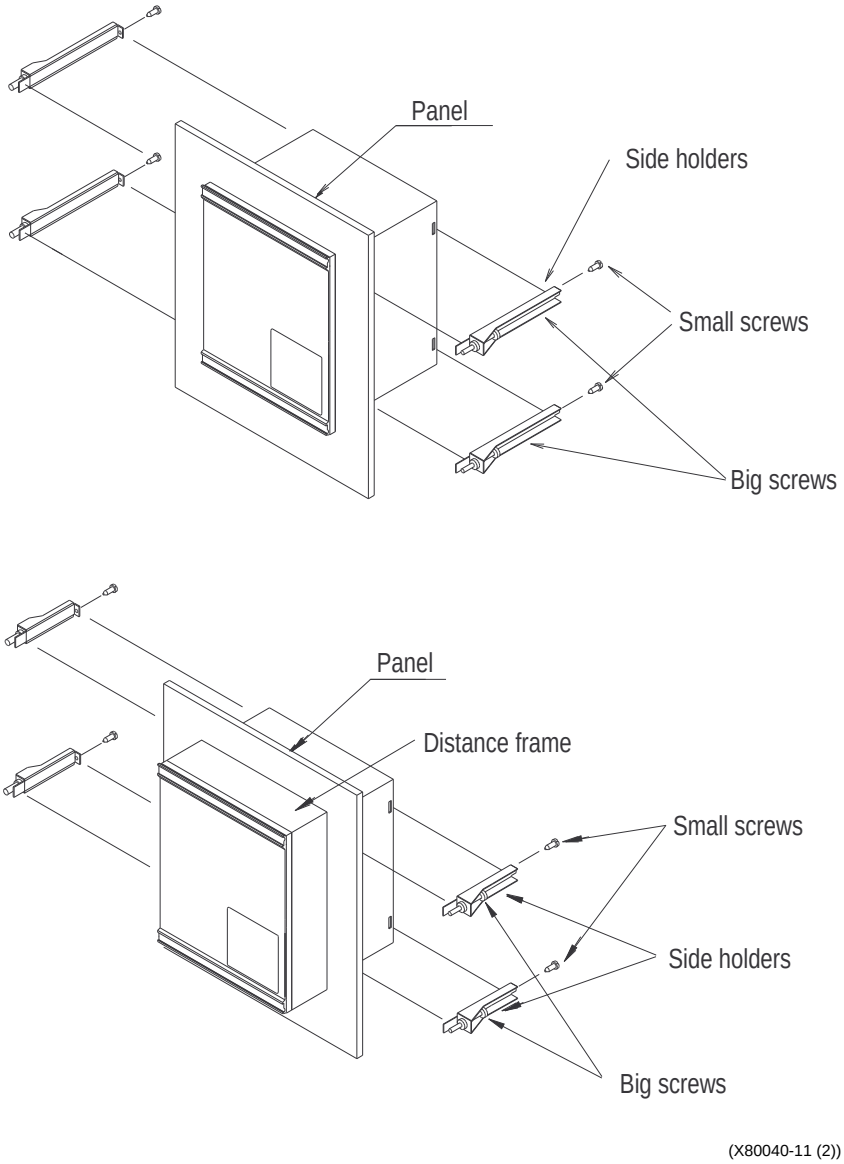

Fig. 12 Flush mounting and semi-flush mounting.

See Buyer's Guide 1MDB14007-EN for ordering details and cut-out sizes.

1.4.3 Wall mounting

A mounting kit is available for wall mounting. It includes:

- Two side plates
- Screws (grip type TORX T20, T25 and T30)
- Two mounting bars to be mounted on the wall

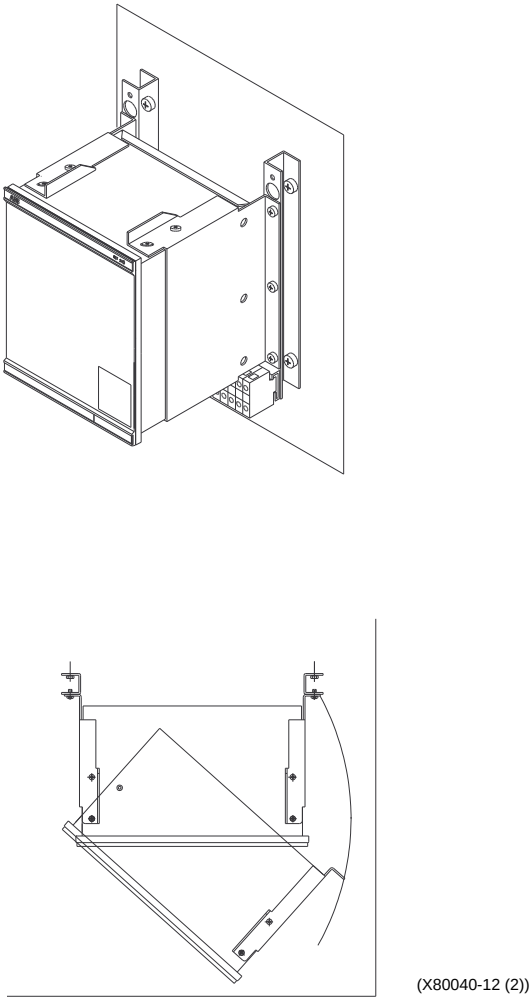

Fig. 13 Wall mounting

See Buyer's Guide 1MDB14007-EN for ordering details.

Two bars of screw terminals can be applied (one above the protection and one below) giving a total number of about 50-70 connection points, depending on the width. The screw terminals and their support are not included in the mounting kit.

1.5 Electrical connections

The electrical terminals are of two different kinds, one for current-carrying conductors with a cross section of up to 4 mm^2, and the other for conductors up to 2,5 mm^2, intended for all voltage signals.

The current-carrying terminals are located on position X11. These terminals are so called “feed-through terminal blocks” with flat tabs on the internal side.

The voltage connector terminals are divided into two parts, a female part for conductor connections, and a male part mounted inside the case on a circuit board. All external connectors located on the rear side of the case are marked with designation labels. The female part of the connector is marked with the same designation label. If only one conductor is applied in the same connection point, the conductor can be 0,2-2,5 mm^2, and if two conductors are applied in the same socket, they can be 0,2-1 mm^2. If two conductors of 1,5 mm^2 each are to be applied, a ferrule can be used. See item 9, “Installation and commissioning” 1MDX80041-EN, or the Buyer’s Guide 1MDB14007-EN for further information.

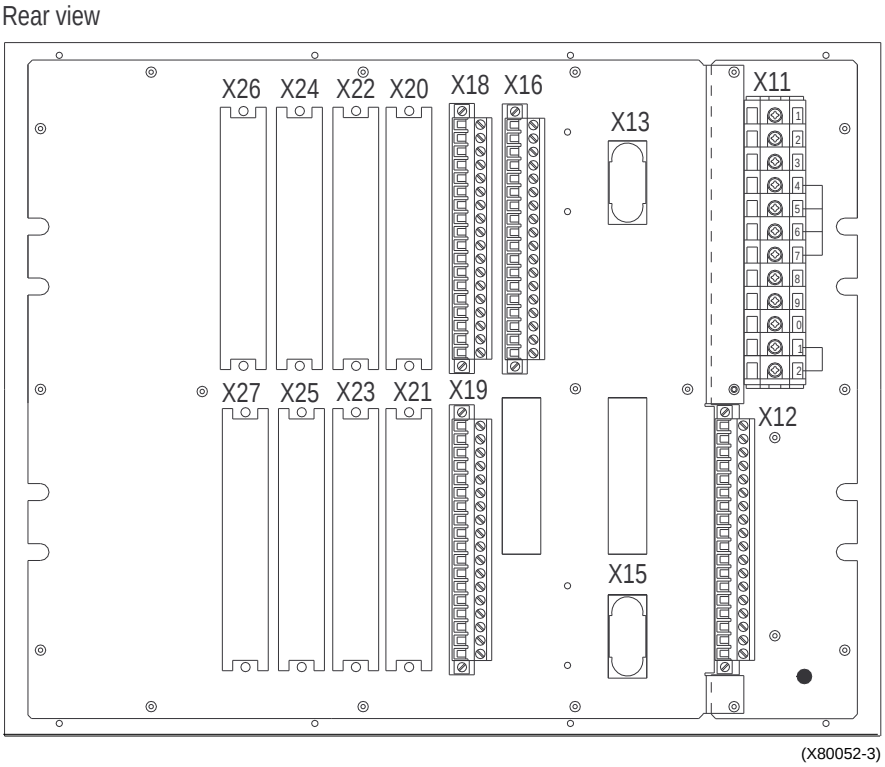

Fig. 14 Rear view of REB 551.

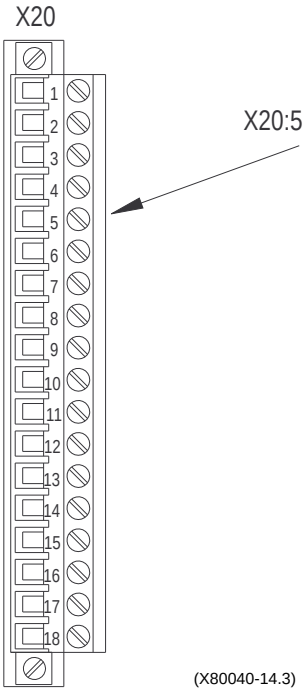

Fig. 15 Voltage connector

The terminals are numbered from 1 to 18 from top to bottom. The marked terminal in the example above is called X20:5.