Contents Page

1 AUTORECLOSING - FOR MULTI BREAKER ARRANGEMENTS 2

1.1 Input and output signals 2

1.2 Theory of operation 5
1.2.1 Input and output signals 6
1.2.2 Function and functional modules 8
1.2.3 Function logic 9

1.3 Setting 15

1.4 Testing 17

1.5 Diagrams 21

1.6 Technical data 30

1.7 Appendix 30
1.7.1 Terminal diagrams 30
1.7.2 Signal list 32
1.7.3 Setting table 34

1 AUTORECLOSING - FOR MULTI BREAKER ARRANGEMENTS

1.1 Input and output signals

Automatic reclosing or autoreclosing (AR) is a well established method to restore the service of a power line after a transient line fault. The majority of line faults are flashover arcs, which are transient by nature. When the power line is switched off by operation of line protection and line breakers, the arc de-ionises and recovers voltage withstand at a somewhat variable rate. A certain line “dead time” is thus necessary, but line service can then be resumed by autoreclosing of the line breakers. The length of the “dead time” is selected so as to give a good probability of fault arc de-ionisation and successful reclosing.

For the individual line breakers and autoreclosing equipment, the expression “Autoreclose open time” (AR open time) will be used.
At simultaneous tripping and reclosing at the two line ends, the “Autoreclose open time” is equal to the “dead time” of the line, but otherwise these two times may differ.

In case of a permanent fault, the line protection will trip again at reclosing to clear the fault. The operation sequence and some expressions are illustrated in Fig. 1.

The reclosing function can be selected to perform single-phase and/or three-phase reclosing from eight single-shot to multiple-shot reclosing programs. The three-phase autoreclose open time can be selected from 0,2-60 s to give either “High-speed autoreclosing” (HSAR), or “Delayed autoreclosing” (DAR).
Three-phase autoreclosing can be performed with or without the use of synchronism check (SC) and energizing check (EC).

Single-phase tripping and single-phase reclosing is a way to limit the effect of a single-phase line fault to system operation. Especially at the higher voltages the majority of line faults are of type single-phase to earth. The method is of particular value to keep maintain system stability in systems with limited meshing or parallel routing. It requires facility for individual operation of each phase of the breakers, which is most common at the higher transmission voltages.
A somewhat longer dead time may be required at single-phase reclosing compared to high-speed three-phase reclosing, due to influence on the fault arc of the non-tripped phases. For longer lines, special four-legged shunt reactor are sometimes used, to improve arc quenching.

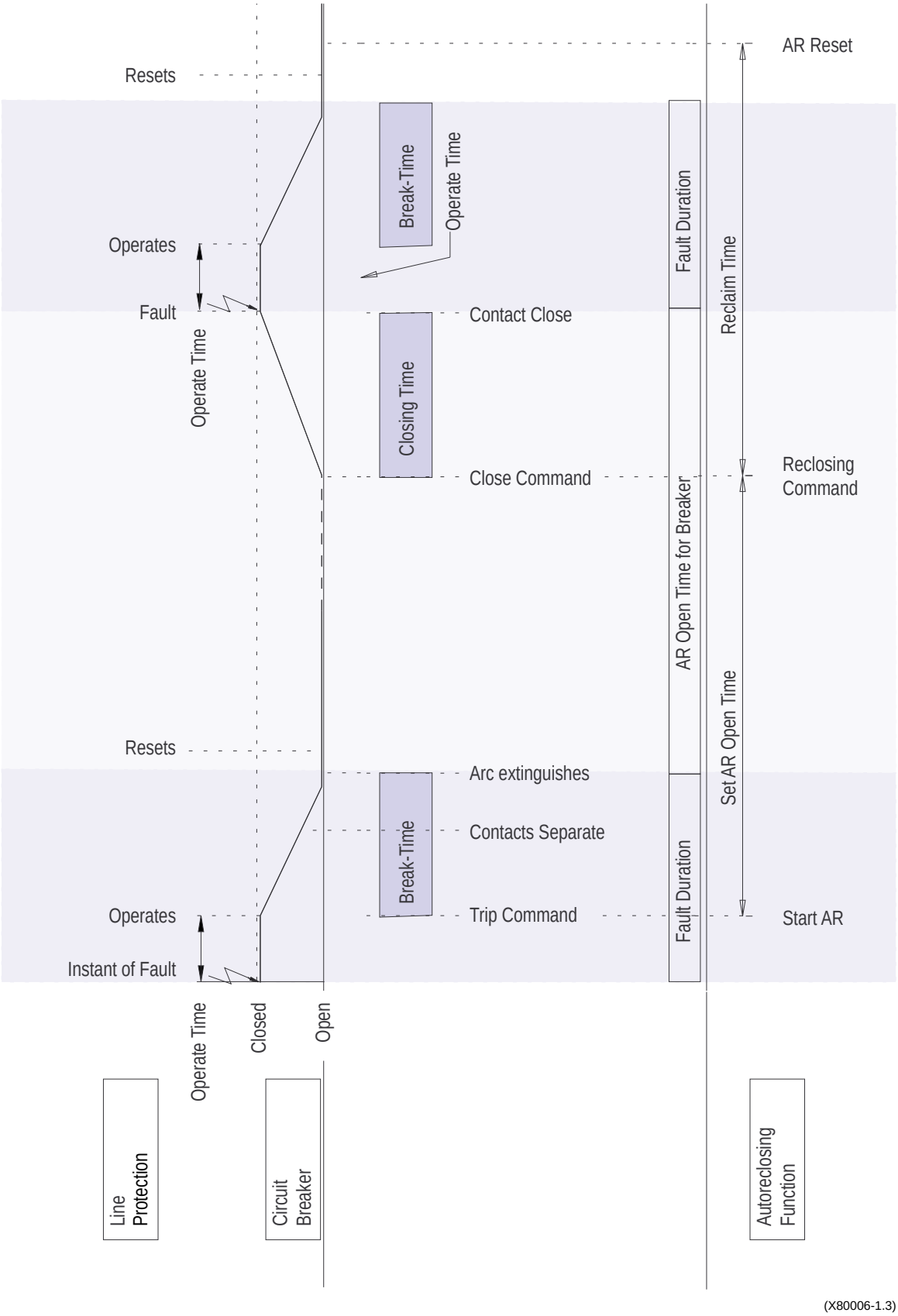

(X80006-1.3)

Fig. 1 Single-shot autoreclosing at a permanent fault.

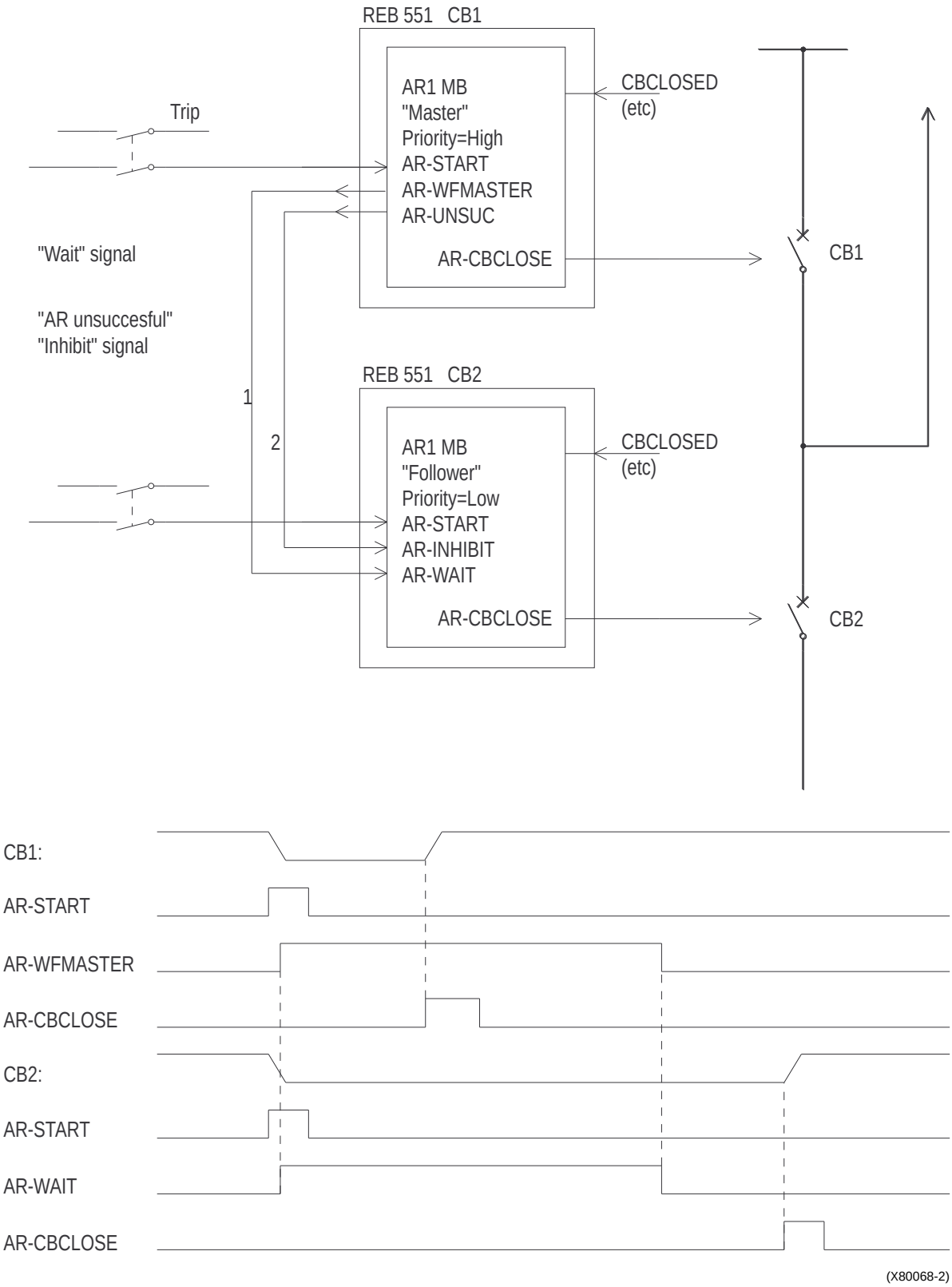

Fig. 2 Sequential reclosing of two line breakers with priority.

Multiple breaker arrangements

In stations with a 1 1/2-breaker, double breaker or ring bus arrangement, there are two breakers which switch that end of the line. The reclosing of the line breakers can be made in a sequential manner. One breaker is reclosed first, and if the reclosing is successful, the second breaker is reclosed as well. In the case of a permanent fault, the second breaker need not be reclosed. By fitting one REB551 unit for each line breaker,and by a few interconnections between these units, linking the two reclosing functions, sequential reclosing can be achieved.

One "Master" unit is chosen and given high reclosing priority. At line protection trip, the two reclosing functions are started, but the master issues a "Wait from Master" signal to the "Follower" breaker reclosing function. At unsuccessful reclosing by the master, a signal to the reclosing inhibit input of the follower unit will interrupt and reset that function.

1.2 Theory of operation

The autoreclosing function in the line protection terminal co-operates first of all with the line protection functions, the trip function, the circuit-breaker and the synchronism check function. It can also be influenced by other protection functions such as shunt reactor protection through binary input (BI) signals, manual control “AR On/Off”, and it can provide information to the disturbance and service report functions, event recording, indications and reclosing operation counters.
The reclosing counters can be read and reset through the MMI branch:

Service Report
ARCounters

The autoreclosing is a purely logical function working with logical or binary signals, logical operations and timers.

1.2.1 Input and output signals

The input and output signals are shown in Fig. 3 below.

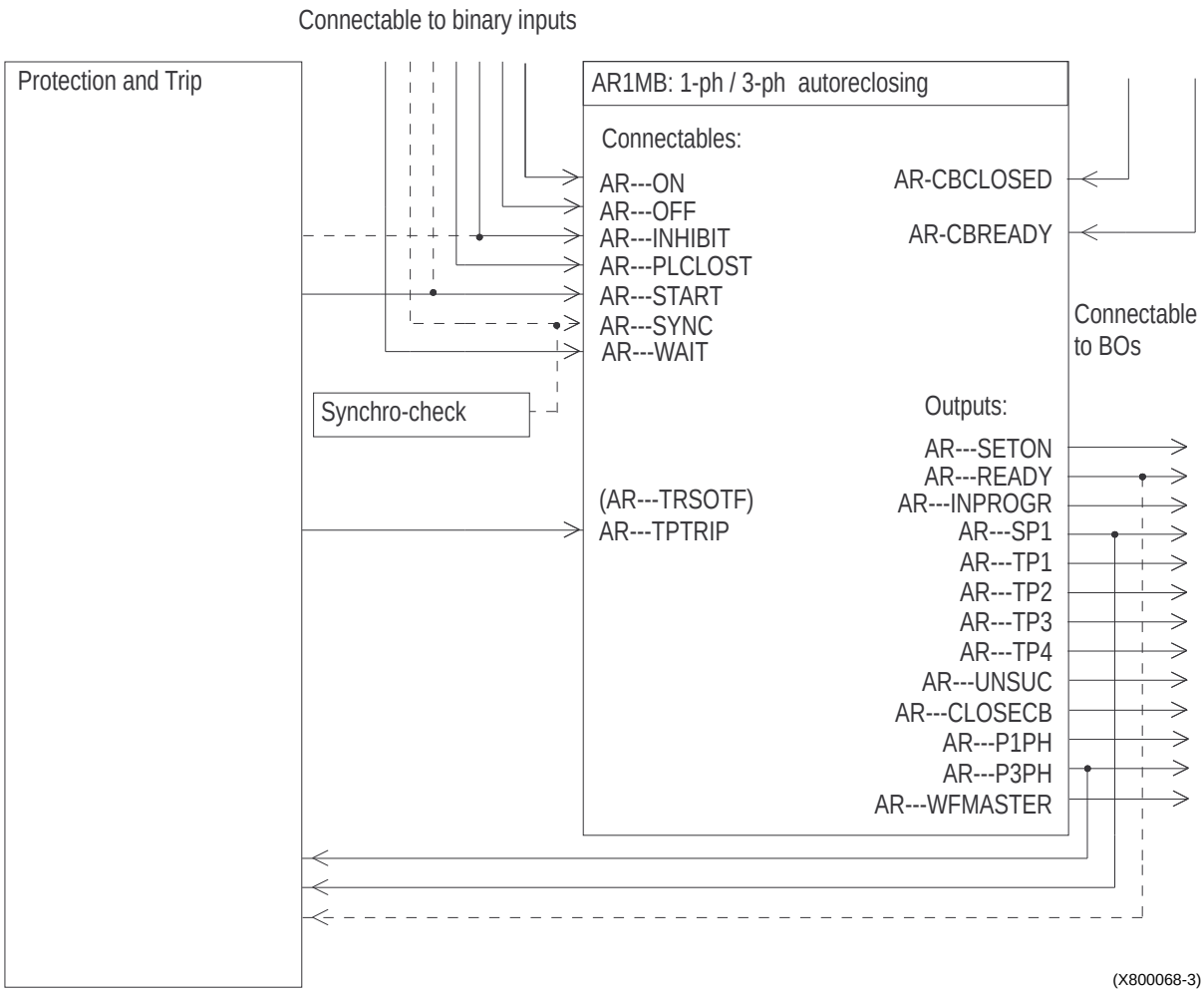

Fig. 3 Single- and three-phase autoreclosing. Input and output signals.

The inputs of type “connectables” can be connected by configuration to binary inputs (BIs) of the terminal. The outputs are connectable by configuration to binary output relays. It is also possible to connect “connectables” and “outputs” to the free logic functions of the unit, e.g. OR-gates, and in that way add connection links.

Input signals

AR---ON	Switches the autoreclosing “On” (at “Operation” = “Stand by“)
AR---OFF	Switches the autoreclosing “Off” (at “Operation” = ”Stand by”)
AR---START	“Autoreclosing start” by a protection trip signal. It also makes the reclosing program continue at a repeated trip.
AR---CBCLOSED	“Circuit-breaker closed”. A condition for the start of a reclosing cycle.
AR---CBREADY	“Circuit-breaker ready for a Close-Open (CO) or Open-Close-Open (OCO) operation. A condition for the start of a reclosing cycle.
AR---INHIBIT	“Inhibit autoreclosing”. Interrupts and blocks autoreclosing.
AR---SYNC	“Synchronism check OK” from the internal SYNC function or an external device.
AR---PLCLOST	“Power line carrier or other form of permissive signal lost” An optional input signal at loss of a communication channel in a permissive line protection scheme. Can extend the “AR open time”
AR---WAIT	“Reclosing wait” used at low priority unit at sequential reclosing
AR---TPTRIP	“Three-phase trip” Signal to the autoreclosing function that a three-phase tripping has taken place.
(AR---TRSOTF)	(“Protection trip switch-onto-fault”. Not used.)

Output signals

AR---SETON	Indicates that the AR function is “On”, i.e. operative.
AR---READY	Indicates that the AR function is ready for a new AR cycle. It is “On” and it is not started or blocked.
AR---INPROGR	“Autoreclosing in progress”. Activated during the “AR open time”.
AR---SP1	“Autoreclosing single-phase, Shot 1" in progress
AR---TP1	“Autoreclosing three-phase, Shot 1" in progress
AR---TP2	“Autoreclosing three-phase, Shot 2" in progress
AR---UNSUC	“Autoreclosing unsuccessful”. Activated at a new trip after the last programmed shot.
AR---CLOSECB	“Close circuit-breaker” command
AR---P3PH	“Prepare three-phase trip”. Control of the next trip operation.
AR---P1PH	“Permit single-phase trip”. Inverse signal to AR---P3PH.
AR---WFMASTER	“Wait from Master”. Issued from the high priority unit at sequential reclosing.

Further explanations under “Function” below.

1.2.2 Function and functional modules

The autoreclosing function can be controlled from the man machine interface (MMI) by a parameter “Operation” to be set at “Off “/ “Stand by“/ “On”.
In the “Off” mode it is made inoperative, and when set “On” the automatic reclosing is on. In the “Stand by” mode, the function can be switched “On” and “Off” by input signal pulses.
The autoreclosing function is divided into functional modules, which are shown in a simplified manner in Table 1.
One module, AR Start, controls the automatic functions “Off” (“Stand-by”) and “On” and the start-up of an autoreclosing cycle at a protection trip.
One module in two variants, serving to either select or not an extended “AR Open time, Shot 1" at certain conditions.
Eight reclosing programs are available, and by setting a parameter, one of these can be selected.
There is a module that processes two different types of “circuit-breaker ready” signals and the signal from the internal or external “synchronism check” function.
There is also a module for the control of the output breaker closing command pulse, which also drives the operate counters.

Table 1: Modules of the autoreclosing function.

Autoreclosing On/Off & start	
Selection switch	Extend open time t1, t1s Long trip signal
Selection switch	8 reclosing programs 1-4 shots, 3-phase AR 1-2 shots, 1- & 3-phase AR
Selection switch	CB Ready: CO, OCO Synch. check input
Selection switch	Close command pulsing Operate counter drivers

1.2.3 Function logic

Start and control of the autoreclosing

Reference Fig. 4.
The automatic operation of the autoreclosing function is controlled by the parameter “Operation” and the input signals as described above. When it is on, the output AR---SETON is high (active).

The autoreclosing function is started at a protection trip by the input signal “AR---START”. At a repeated trip, this signal is also activated in order to make the reclosing program continue.
There are a number of conditions for the start to be accepted and a new cycle started. After these checks, the starting signal is latched in, and the signal “Started state” is activated. It can be interrupted by certain events.

AR---CBCLOSED
The circuit-breaker (CB) shall have been closed for at least five seconds to allow a new AR cycle to be started. It prevents start at closing onto a fault. It also prevents the reclosing of a breaker open at the protection trip, which is possible in a multiple breaker arrangement.

AR---CBREADY
The circuit-breaker must have its operating gear charged and ready for a Close-Open (CO) or an Open-Close-Open (OCO) to allow the start of an autoreclosing cycle. If it is not ready at start, there is little chance that it will be ready by the end of the AR open time.

Blocking and inhibit signals may be created at other parts of the program and will interrupt the reclosing cycle or prevent reclosing. One source of such a signal is activation of the input “AR---INHIBIT in Fig. 6.

AR---READY
This output “AR ready for a new reclosing cycle” is high when the function is “On”, at rest and prepared for operation.
This signal can be used by protection function to extend the reach before reclosing, when that facility is required.

AR---UNSUC
The output “Reclosing unsuccessful” will be activated at a possible new trip after the selected number of reclosing shots, or at trip while reclosing is blocked.
The output will reset after the reclaim time.

(AR---TRSOTF, Not used in REB 551)
“Protection trip switch-onto-fault”. This signal alone does not start reclosing. However, at a reclosing onto a permanent fault it may appear and let the function move on to “AR---UNSUC” (unsuccessful) or second-shot reclosing as programmed.

Control of the extended “AR open time, shot 1".

Reference Fig. 5.
By setting parameter “Extended t1”, this facility can either be selected or not. The purpose is to adapt the length of the “AR Open time” to the possibility of non-simultaneous tripping at the two line ends. If a “permissive” communication scheme is used, and the permissive communication channel (e.g. PLC, power line carrier) is out of service at the fault, there is a risk of sequential, non-simultaneous tripping. To ensure a sufficient line “dead time”, the “AR open time” can be extended. The input signal AR---PLCLOST is checked at tripping.

Long trip signal. Under normal circumstances the trip command will reset quickly, due to fault clearing. There is a possibility of setting a maximum trip pulse duration by tTrip. At a longer trip signal, the “AR open dead time” will be extended by Extend_t1.
If the setting “Extended t1” = Off is selected, a long trip signal will interrupt the reclosing sequence in the same way as AR---INHIBIT.

Priority of sequential reclosing of two line breakers

Reference to Fig. 2 and Fig. 6. At single-breaker application, Priority = No can be selected, and this module has no influence. The signal Started is sent out to the next function module. At double-breaker and similar applications, "Priority" is set high on the "Master" unit, and low on the "Follower" one. While reclosing is in progress on the high priority unit, it issues a signal AR---WFMASTER, "Wait from Master". A reset delay ensures that the "Wait" signal is kept high for the breaker closing time. After an unsuccessful reclosing it is also maintained by the signal AR---UNSUC. At the low priority unit, the input signal AR---WAIT holds back a reclosing operation. A timer "tWait" sets a maximum waiting time for the reset of the AR---WAIT signal. At time-out, it interrupts the reclosing cycle by the “WM-INH” (Wait for master inhibit) signal.

Reclosing programs

There are different reclosing programs selectable to fit the application:

1. 3-phase reclosing, 1 shot
2. 3-phase reclosing, 2 shots
3. 3-phase reclosing, 3 shots
4. 3-phase reclosing, 4 shots
5. 1-phase reclosing, 1 shot
6. 1-phase or 3-phase reclosing, 1 shot
7. 1-phase followed by 3-phase reclosing,
   or just one 3-phase reclosing, depending on type of fault, 2 shots
8. 1-phase or 3-phase reclosing, followed by 3-phase reclosing, 2 shots

Program 6
For single-phase/three-phase, one-shot reclosing is used as an example of the operation. Operation: Please refer to Fig. 4, Fig. 7 and Fig. 10. The AR function is assumed “On” and “Ready” and the breaker closed and charged.

At operation of the line protection, AR---START is received and sealed-in The output “AR---READY” (Ready for a new AR cycle) is reset.
If the AR---TPTRIP (three-phase trip) is low, the timer for single-phase reclosing open time “t1S” is started and the output AR---SP1 (autoreclosing single-phase, shot 1, in process) is activated.
It can be used to suppress “Pole disagreement” and earth-fault protection during the single-phase open interval.
Should the input AR---TPTRIP be high, the timer for “three-phase AR open time”, “t1”, is started (instead of “t1S”) and AR---TP1 is set (autoreclosing three-phase, shot 1, in process). While either “t1S” or “t1” is running, the output AR---INPROGR is activated.
Immediately after the start-up of the reclosing and tripping of the breaker, the input (in Fig. 4) AR---CBCLOSED will be “low” (possibly also AR---CBREADY at type OCO). The “AR Open time” timer, t1S or t1, keeps on running.
At the end of the set “AR open time”, t1S or t1, the respective SPTO or TPTO (single-phase or three-phase AR time-out) is activated and goes on to the output module for further checks and to give a closing command to the circuit-breaker.

Evolving fault
A single-phase fault can result in a single-phase trip and start of “t1S”. The fault may evolve into another phase. At such an evolving fault, the protection shall issue a three-phase trip for the second time.
When the AR-TPTRIP appears, the t1S-timer is stopped and the timer for three-phase AR open time, t1, is started.

Extended “AR open time”, t1S, or t1
This facility can be used or blocked by the parameter “Extended t1”. Assume that it is used. Should the signal AR---PLCLOST be high at the trip, e.g. due to a lack of “permissive communication channel”, the AR open time will be extended by 0,4 s to allow for a sufficient line “dead time”.

AR---P3PH, “Prepare three-phase trip”
This output signal is intended to ensure that a possible coming trip operation will be a three-phase operation. This is for instance the case if the AR is set off, or blocked, or if it has made the first reclosing shot.
Normally the signal is reset when the reclaim time after a reclosing has expired, and the function is once more ready for a single-phase reclosing
“Permit single-phase trip”. It is the inverse of P3PH and is intended to be connected to a binary output relay. Should the unit with the autoreclosing be inoperative, single-phase trip will thus not be released. The external circuit can be connected to a make or break contact of an output relay depending on what is required, Permit single-phase or Prepare three-phase trip.

“Block start” Blocking of a new reclosing cycle.
A new start of a reclosing cycle is blocked for the reclaim time after the selected number of reclosing shots have been made.

Reclosing checks and “Reclaim timer”.

Refer to Fig. 8.
An “AR open time” time-out signal, is received from a program module.
At three-phase reclosing, a synchronism check (SC) and/or energizing check (EC), or voltage check, can be used. One may use an internal or an external synchronism check function, configured to AR---SYNC.
If reclosing without any check is preferred, the input AR---SYNC should be configured to FIXD-ON (fixed=1).
Another possibility is to set the output from the internal synchronism check function to a permanently active signal. That’s done by the setting Operation = Release, and AR---SYNC is configured to SYNC-CHECKOK.

At confirmation from the synchronism check, or if the reclosing is of single-phase type, the signal passes on.
At “CBReady” signal of type Close-Open (CO), it is checked that this signal is present to allow for reclosing.

The synchronism and energizing check is allowed a certain time, tSync, to appear. If it does not, or the other conditions are not fulfilled, the reclosing will be interrupted and blocked.

AR---INHIBIT.
Should this input signal appear, reclosing is inhibited. There is a reset timer, tInhibit, to ensure blocking during a few seconds after the signal is removed.
The input can for instance be activated by shunt reactor protection, or delayed back-up protection or breaker failure protection.

Reclaim timer
This timer defines a period from the issue of a reclosing command, after which the reclosing function is reset. Should a new tripping take place within this time, it will be treated as a continuation of the first fault.
When the signal to a closing command is given (Pulse AR), the reclaim timer is started.

There is an “AR State Control” to keep track of the actual state in the reclosing sequence.

Pulsing of CB closing command and incrementing the operation counters

Reference Fig. 9.
The breaker closing command, AR---CLOSECB, is made as a pulse of length, as set by the parameter “tPulse” 0,1-1 s.
For breakers without an anti-pumping function, the closing pulse cutting described below can be used.
It is selected by means of the parameter “CutPulse = On”. A new tripping pulse, (Trip Int.), will then interrupt the pulse.
The minimum length, however, is always 50 ms.
At the issue of a reclosing command, the associated reclosing operation counter is also incremented.
There is a counter for each type of reclosing and one for the total of all reclosings.

Transient fault

After the reclosing command, the reclaim timer keeps running for the set time, tReclaim = 10 to 300 s. If no tripping takes place within this time, the autoreclosing function resets after the reclaim time. The breaker remains closed and the operating gear recharges too, and we have AR---CBCLOSED = 1, AR---CBREADY = 1.
After the Reclaim time, the AR state control resets to the original rest state, with outputs AR---SETON = 1, AR---READY = 1 and AR---P1PH = 1 (depending on selected program). The other outputs are = 0.

Permanent fault

Refer to Fig. 4 and Fig. 10.
After reclosing, a new trip is made and a new signal AR---START (or AR---TRSOTF) appears, which means “Trip Int.” into the logic.
It will activate AR---UNSUC (Reclosing unsuccessful). The timers for reclosing shot 1, t1S and t1, can not be started (Fig. 7).
Depending on the setting of the parameter PulseCut, the closing command may be shortened or not at the second tripping command.
After time-out of the reclaim timer, the function will reset, but the breaker remains open (AR---CBCLOSED = 0, AR--- CBREADY = 1), meaning that the reclosing function is not ready for a new reclosing function.

Other reclosing programs, particular comments

Program 1
3-phase, single-shot reclosing
The output AR---P3PH is always high (=1).
A tripping operation will be made as a three-phase trip at all fault types.
The reclosing will be as a three-phase reclosing of Program 6, described above.

Program 2
3-phase + 3-phase, two-shot reclosing.
The operation will be similar to that in Program 1, but at a tripping after the first reclosing shot, a second reclosing shot is made.

Program 3 and 4
They are as the 2-shot reclosing program 2, but 3 or 4 shots are made.

Program 5
1-phase, single-shot reclosing
At 1-phase tripping, the operation is as in Program 6, described above.
At receipt of the three-phase trip signal AR---TPTRIP, the reclosing is interrupted and blocked for the set inhibit time, tInhibit.

Program 7
1-phase+ 3-phase two-shot reclosing, or 3-phase single-shot reclosing.
For a multiphase fault and a three-phase tripping, the operation is as in Program 6, described above; one reclosing shot is made.
However, at a single-phase fault and a single-phase tripping and reclosing, a second three-phase reclosing with a longer delay is made. Three separate “AR open time” timers are used, t1S or t1 for the first shot, and t2 for the second shot (1-300 s).
The sequence is illustrated in Fig. 11.

Program 8
1-phase + 3-phase, or 3-phase + 3-phase, two-shot reclosing.
The operation will be similar to that in Program 6, described above, but at a tripping after the first reclosing shot, a second reclosing shot is made.

Sequential reclosing of two line breakers with priority

The interconnections are made according to Fig. 2. The unit for CB1 is given Priority = "High" and that for CB2 Priority = "Low".

Line fault:
The two breakers are tripped from line protection and breaker-trip relays. The two reclosing functions are started at the trip, for instance from the breaker-trip relays. If the conditions for accepting a start are fulfilled, the high priority unit starts one of its "AR Open time" timers, t1S or t1, and issues AR---WFMASTER. The low priority unit receives AR---WAIT and is started, but not released, and it is kept waiting. Timer "tWait" is run, but not "t1S" or "t1". (Fig. 6 and Fig. 7)
After the set "AR Open time" has elapsed, the high priority unit makes CB1 reclose.

Transient fault:
After a reset time of t = 1 s, the signals AR---WFMASTER and AR---WAIT are reset and the low priority unit starts one of its "AR Open time" timers, "t1S" or "t1".
After the set time, a reclosing command will be issued to the second breaker as well.
After the reclaim time, the reclosing functions will reset.

Permanent fault:
Immediately after the first reclosing there will be a new trip and AR--START to the two units. If only one reclosing shot is selected, the high priority unit will activate AR---UNSUC, which is kept high until the end of the reclaim time. The signal AR---WFMASTER and keeps the input signal AR---WAIT high and AR---UNSUC activates the input signal AR---INHIBIT of the low priority unit. This unit will set the signal Inhibit and interrupt the "wait state" and the reclosing cycle.
The protection will usually carry out the second trip as a three-phase one. Otherwise, the pole discordance function will be released and it can carry out a three-phase trip, when the single-phase reclosing is interrupted and AR---SP1 is reset.

Particular conditions at the fault occurrence
One breaker open: There is no input signal AR---CBCLOSED at AR---START, and the start of that unit is not accepted. It will not issue any "Wait"-signal, and reclosing of the other breaker from its reclosing function can be made.
Reclosing of one breaker is set "Off": The unit in question will not operate, but the other one may.

Single-phase and three-phase tripping and reclosing
The programs of the two units can be set individually. The outputs AR---P3PH, "Prepare 3-phase trip", and AR---P1PH, "Permit 1-phase trip", will be set accordingly. By letting one of these signals control the interconnection between the phases of breaker-related trip relays, the trip mode per breaker can be controlled (instead of one trip mode per line).

1.3 Setting

The setting parameters are accessible through the MMI. The parameters for the autoreclosing function are found in the MMI tree under:

Settings
Functions
Group n
Autorecloser

The parameters and their setting ranges or alternatives are shown in the appendix of this function.

Configuration of input and output signals to the function is made in the MMI structure branch Configuration.
In order to get the required operation of the protection terminal, it is necessary to make logical connections from physical binary inputs (BIs) and from other internal functions.
Output signals should also be connected to physical binary outputs (BOs) or other functions.

Hints regarding input signals

MMI branch:

Configuration
FunctionInputs
AutoRecloser

AR---ON and AR---OFF
may be connected to BIs for external control.

AR---START
should be connected to the protection function trip output for which it is to be started. It can also be connected to a BI for start from an external contact. A logical OR gate can be used to multiply the number of start sources.

AR---INHIBIT
can be connected to BI, for example for AR blocking from a certain protection, such as a line connected shunt reactor, transfer trip receive, internal or external back-up protection or breaker failure protection. It could also be connected to a signal for manual breaker closing, but it is not necessary, if the input AR---CBCLOSED is connected.

AR---CBCLOSED, and AR---CBREADY
are to be connected to BIs, for pick-up of the breaker signals. Should the external signal be of type “Breaker not ready” (“uncharged”), an inverter can be configured before “CBREADY”.

AR---SYNC
is connected to the internal function “SYNC” if needed. It can also be connected to a BI. If neither internal nor external synchronism or energizing check (dead line check) is required, it can be connected to a permanent 1, by connection to FIXD-ON.

AR---PLCLOST
can be connected to a BI, when it is to be used.

AR---WAIT
At sequential reclosing, this input of the low priority unit is connected to a binary input and to the "AR---WFMASTER" output of the high priority unit as shown in Fig. 2.

AR---TPTRIP
is connected to the internal function TRIP, or to a BI. The protection functions that give a three-phase trip are supposed to be routed via the TRIP function.

AR---TRSOTF
is not used in REB 551.

Hints regarding output signals

AR---READY
is connected to the IMP--ARREADY “Zone extension” of line protection. It can also be used for indication, if required.

AR---SP1
“Single-phase reclosing in progress” is used to temporarily block an earth-fault protection and/or a “Pole disagreement” function during the single-phase open interval.

AR---CLOSECB
Connect to a BO, output relay for breaker closing command.

AR---P3PH
“Prepare three-phase trip”: Connect to TRIP-PTPTRIP.

AR---P1PH
“Permit single-phase trip”: Can be connected to a BO for external connection to external protection or trip relays. If needed as an output, it is recommended to use this signal AR---P1PH to an output relay. In case of total loss of auxiliary voltage, the output relay will drop, and not allow single-phase tripping. If needed to invert the signal, it can be made by a break contact of the output relay.

AR---WFMASTER
At sequential reclosing, this output of the high priority unit is connected to a binary output and to the reclosing AR---WAIT input of the lowpriority unit as shown in Fig. 2.

AR---UNSUC
"Reclosing unsuccessful". At sequential reclosing, this output of the high priority unit is connected to a binary output and to the reclosing AR---INHIBIT input of the low priority unit as shown in Fig. 2.

The other output signals can be connected for indication, disturbance recording, etc., as required.

1.4 Testing

Testing of the autoreclosing function, for instance at commissioning or after a changed configuration, can be performed with the function in co-operation with some other functions, in particular the protection and trip, as well as the synchronism check function (with energizing check).

Fig. 12 shows a suggested testing arrangement, in which the circuit-breaker is simulated by an external bistable relay (BR), for instance of type RXMVB2 or RXMVE1. There are also three manual switches, SC (Switch “Close”), ST (Switch “Trip”) and SRY (Switch “Ready”) SC and ST can be push-button with spring return. Should no bistable relay be at hand, it can be replaced by two self-reset auxiliary relays as in Fig. 13.

The Trip and Close circuits to the breaker and the incoming signals from the breaker are opened at a test switch or at the connecting of terminals with links.
A secondary injection relay test set is used to operate the protection function. The BR relay can be used to control the injected analogue quantities in such a way that the fault appears only when BR is picked-up, simulating a closed breaker position.
The arrangement could be made more elaborate by including simulation of the condition “Breaker charged” or AR---CBREADY for a Close-Open (CO) or Open-Close-Open (OCO) sequence. The condition AR---CBREADY at type “CO” is typically low for a recharging time of 5-10 s after a closing operation, and then, high. In the shown example it is simulated by a manual switch, SRY.

Suggested testing procedure:

1 Preparations

1.1 Check the settings of the autoreclosing (AR) function. The operation can be set at “Stand by” (Off).

MMI branch:

Settings
Functions
Group n
Autorecloser

If any time settings are changed so as to speed-up or facilitate the testing, they must later be changed back to normal and a verification test must be made after that.

1.2 Read and note the reclosing operate counters from the MMI branch:

Service report
AR Counters
Counters

1.3 Do the testing arrangements outlined above, e.g. as in Fig. 12.

1.4 The breaker position AR---CBCLOSED, the Trip and Closing commands, AR---CLOSECB) and other signals as well should preferably be arranged for event recording, which will provide time measurements. Otherwise, a separate timer or recorder can be used to check the “AR open time” and other times.

2 Check that the AR function works

2.1 Ensure that the voltage inputs to “Synch. check” are such that they will give accepted conditions at open breaker (BR). They can, for instance, be “Live busbar and Dead line”.

2.2 Set the function at “On”.

2.3 Make a BR pick-up by a closing pulse, the SC-pulse.

2.4 Close SRY, “Breaker Ready” and leave it closed.

2.5 Inject AC quantities to give a trip and start AR.
Observe or record the BR operation. The BR relay should trip and reclose.
After the closing operation, switch SRY could be opened for about 5 s, and then closed.
The “AR Open time” and the operating sequence should be checked, e.g. in the event recording.
Check the operate indications and the operate counters as well.
Should the operation not be as expected, the reason must be investigated. It could be due to an “AR Off” state or wrong program selection, or not accepted synchronism check conditions.

2.6 A few fault cases may be checked, e.g., single-phase and three-phase tripping, transient, and permanent fault. The signal sequence diagrams of Fig. 10 and 11 can be of guidance for the check.

3 Check that reclosing does not take place when it is not meant to!

The number of cases can be varied according to the application. Examples of selection cases follow below.

3.1 “Inhibit” input signal: Check that the function is operative and that the breaker conditions are OK. Apply an input signal AR---INHIBIT and start the reclosing function. No reclosing.

3.2 Breaker open, closing onto a fault: Put the breaker simulating relay, BR, in open position. Close it with switch SC and start the AR within a second. No reclosing.

3.3 Breaker not ready: Close the breaker relay BR and see that everything except for AR---CBREADY is in normal condition, SRY open. Start the AR function. No reclosing.

3.4 Lack of verification from synchronism check: Check the function at non-acceptable voltage conditions. Wait for time-out, >5 s. No reclosing.

3.5 Operation “Stand by” and “Off”: Check that no reclosing can take place with the function in “Off” state.

3.6 Depending on the program selection and the selected fault types that start and inhibit reclosing, a check of no unwanted reclosing can be made. For instance, if only single-phase reclosing is selected, a test can verify that there is no reclosing after three-phase tripping.

4 Termination of the test and restoration of the equipment to normal state

After the tests, restore the equipment to normal or desired state.

Especially the following items should be checked:

4.1 Reclosing operate counters: Check and record the counter contents. (Reset if it is the user's preference.)

MMI branch:

Service report
AR Counters
Counter
Clear counters

4.2 Setting parameters, and Off, Stand by, or On state as required.

4.3 Test switch or disconnected links of connection terminals.

4.4 Normal indications.

(If so preferred, the disturbance report may be cleared.)

MMI branch:

Disturb. Report
Clear DistRep

1.5 Diagrams

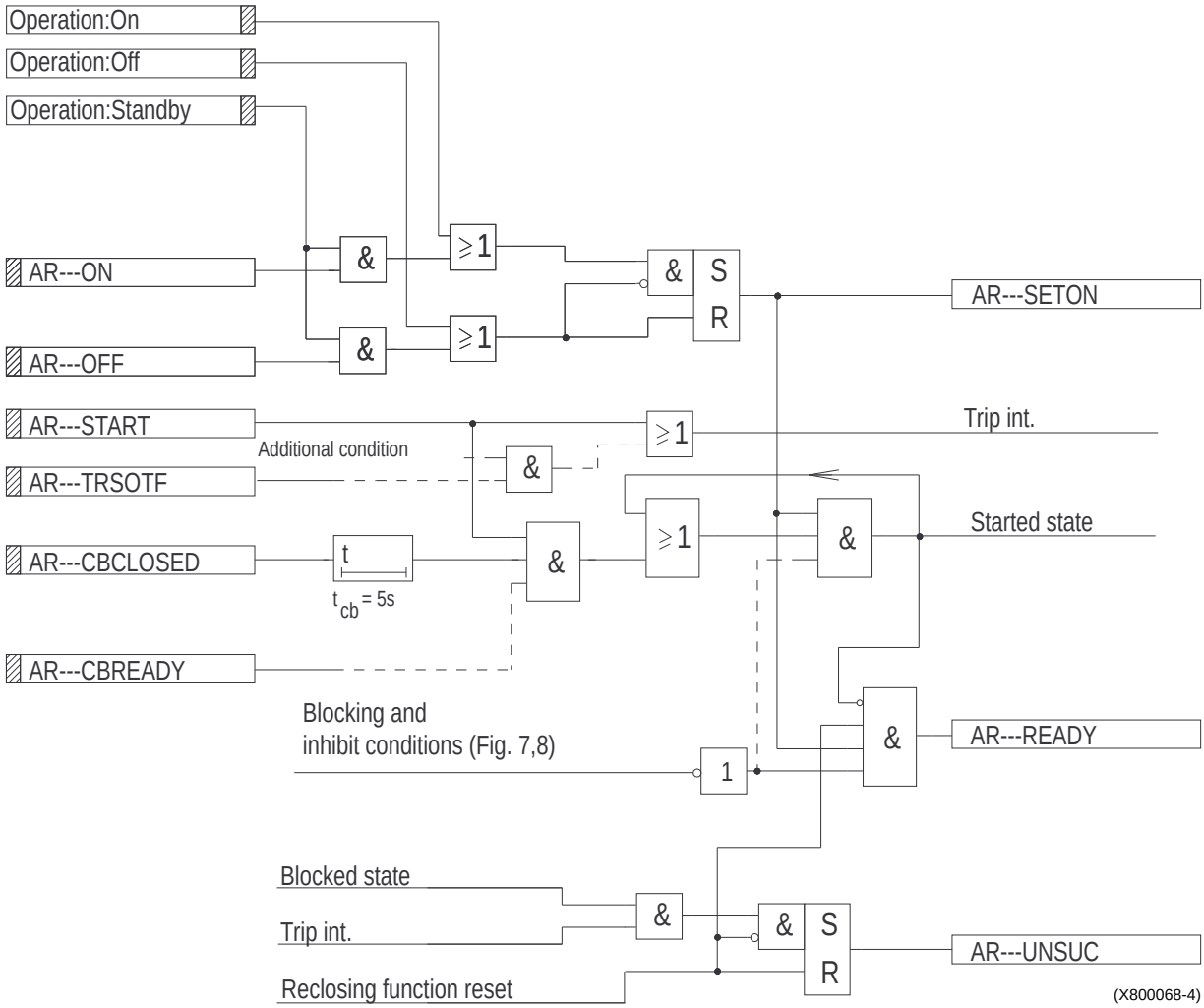

Fig. 4 Auto-reclosing On/Off control and start. Simplified logic. Details are left out.

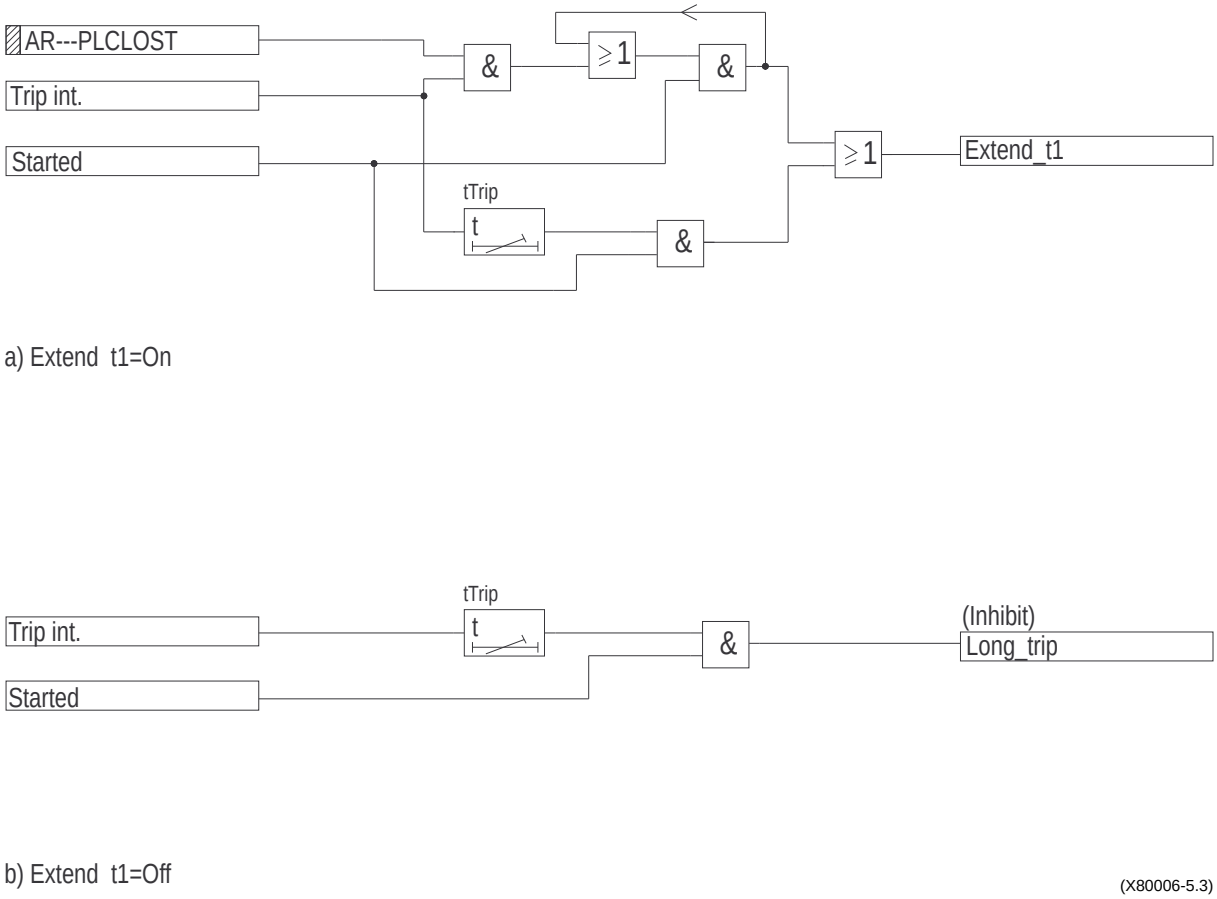

Fig. 5 Control of extended "AR Open time, shot 1"

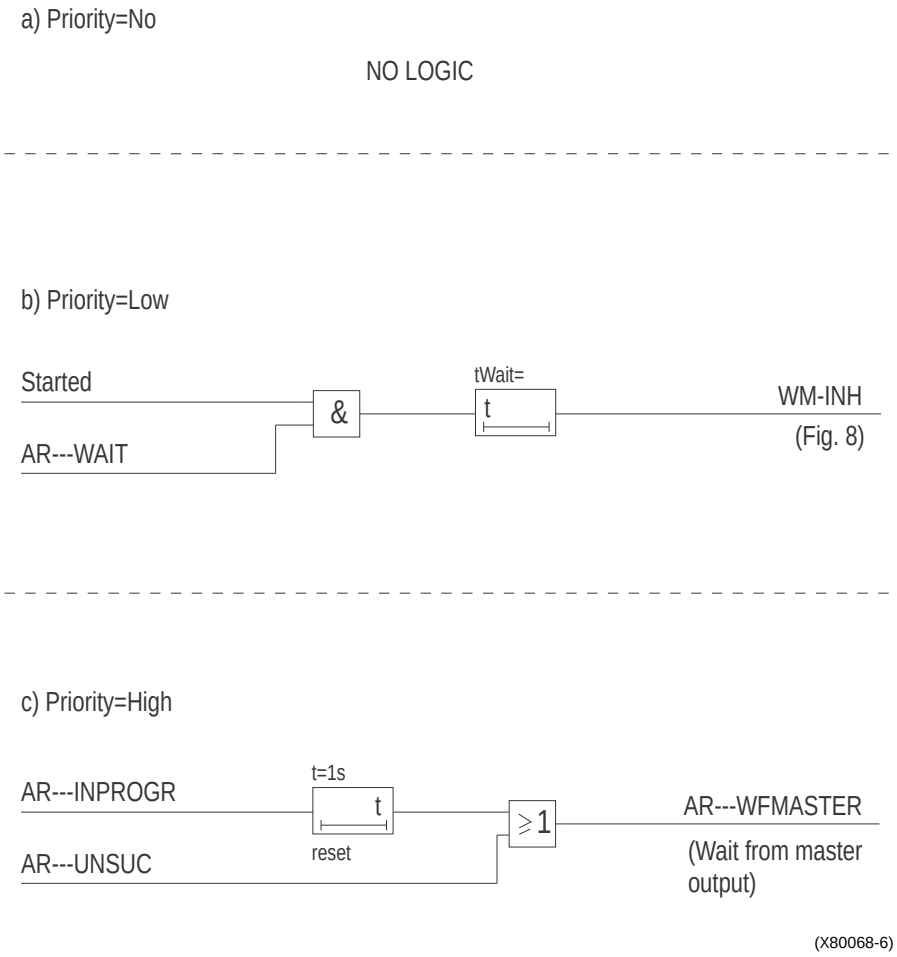

Fig. 6 Priority of sequential reclosing

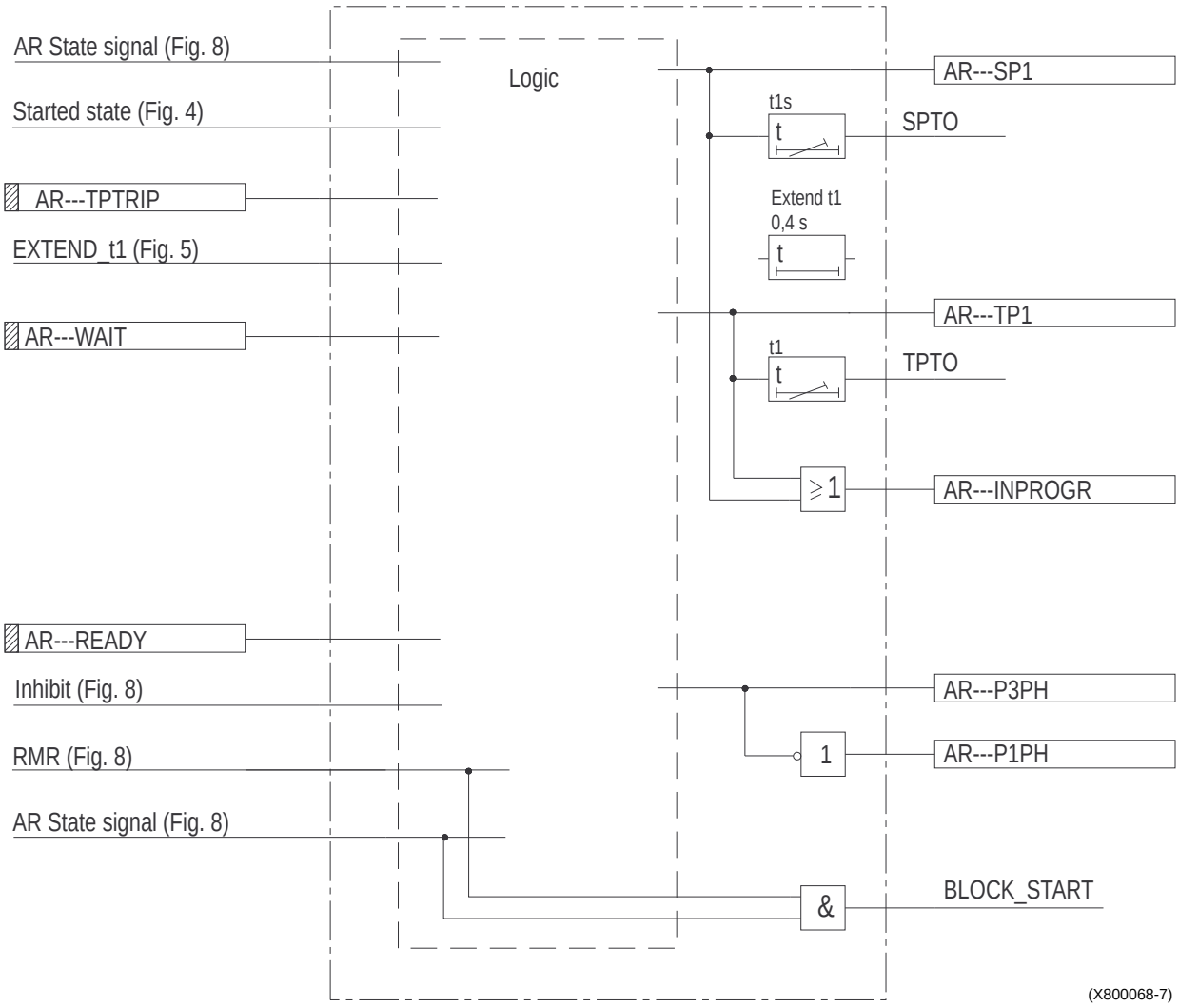

Fig. 7 Reclosing program 6. 1-phase or 3-phase, 1-shot reclosing. Simplified logic. Details are left out.

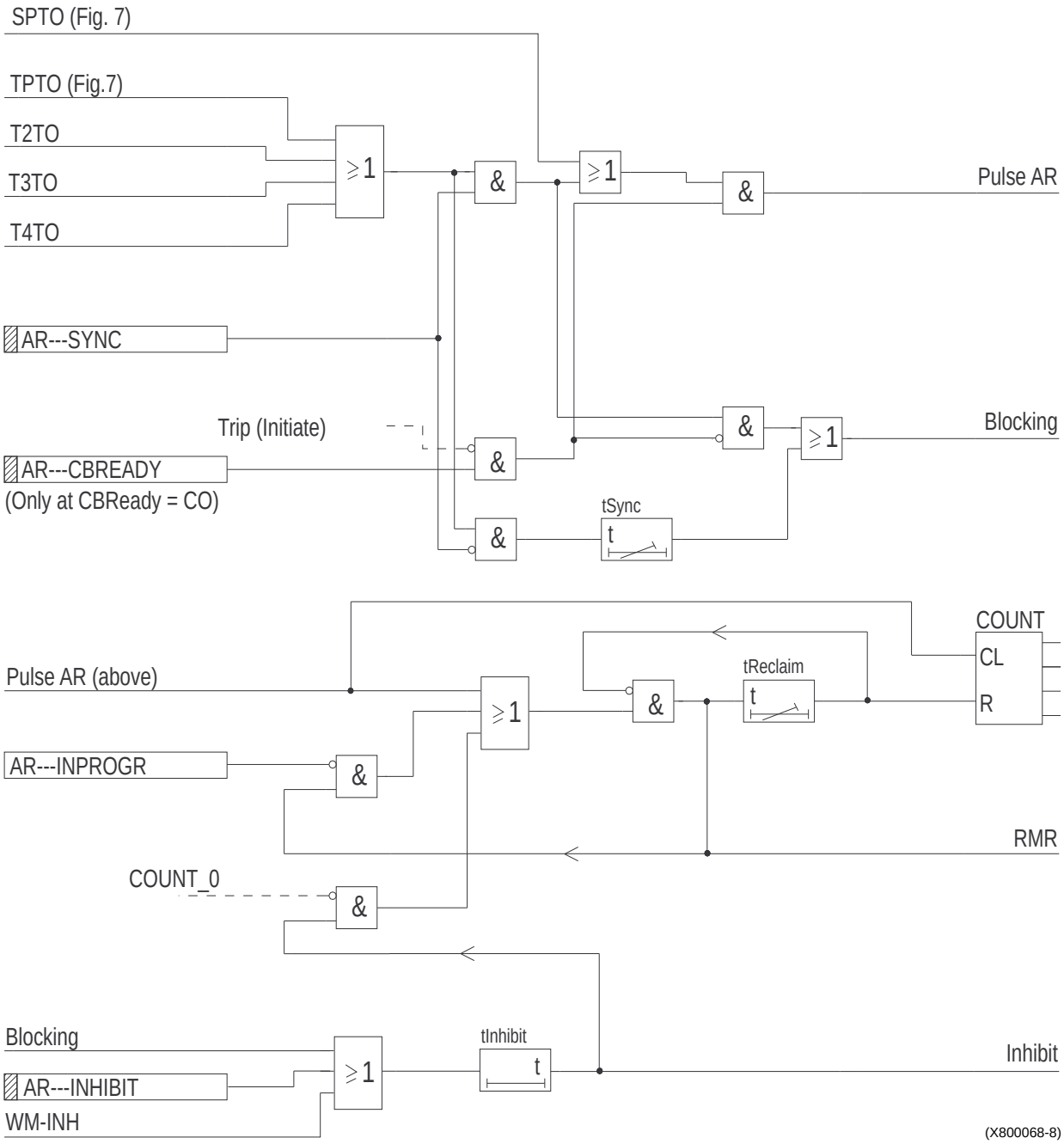

Fig. 8 Reclosing checks and "Reclaim" and "Inhibit" timers. Simplified logic. Details are left out.

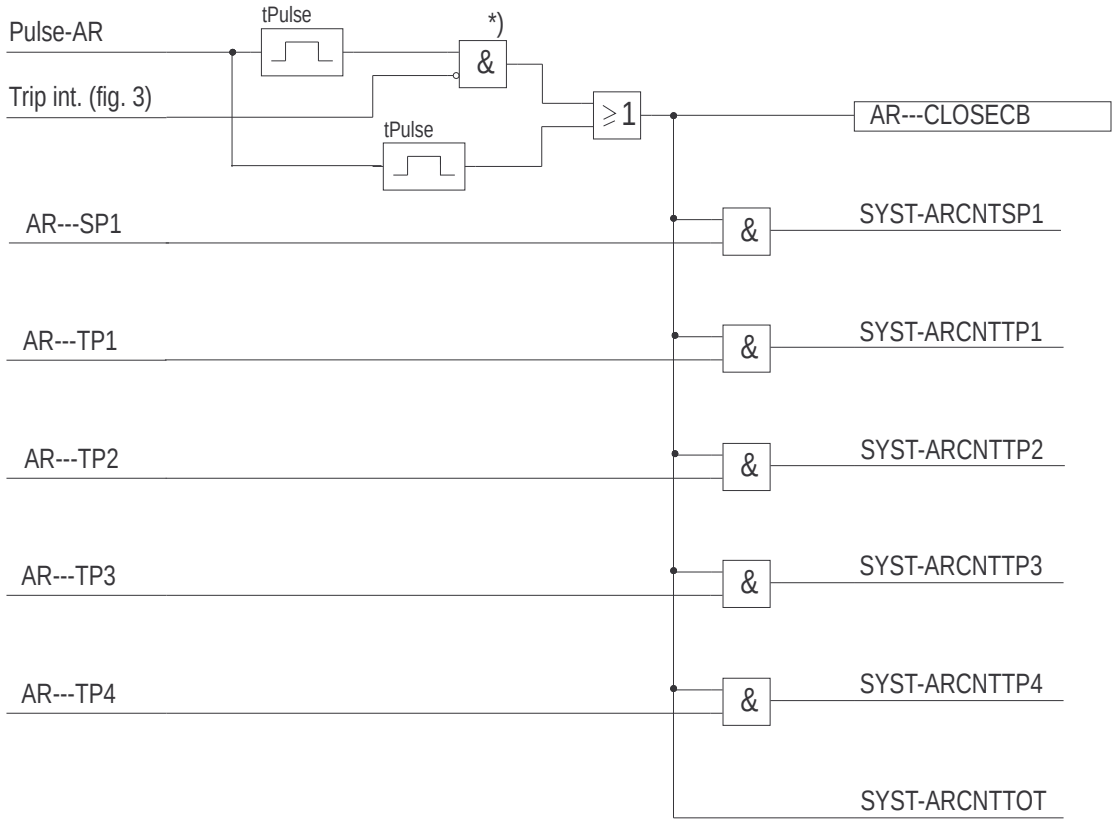

*) Only if "PulseCut" = On

(X80006-8.3)

Fig. 9 Pulsing of close command and driving of operation counters.

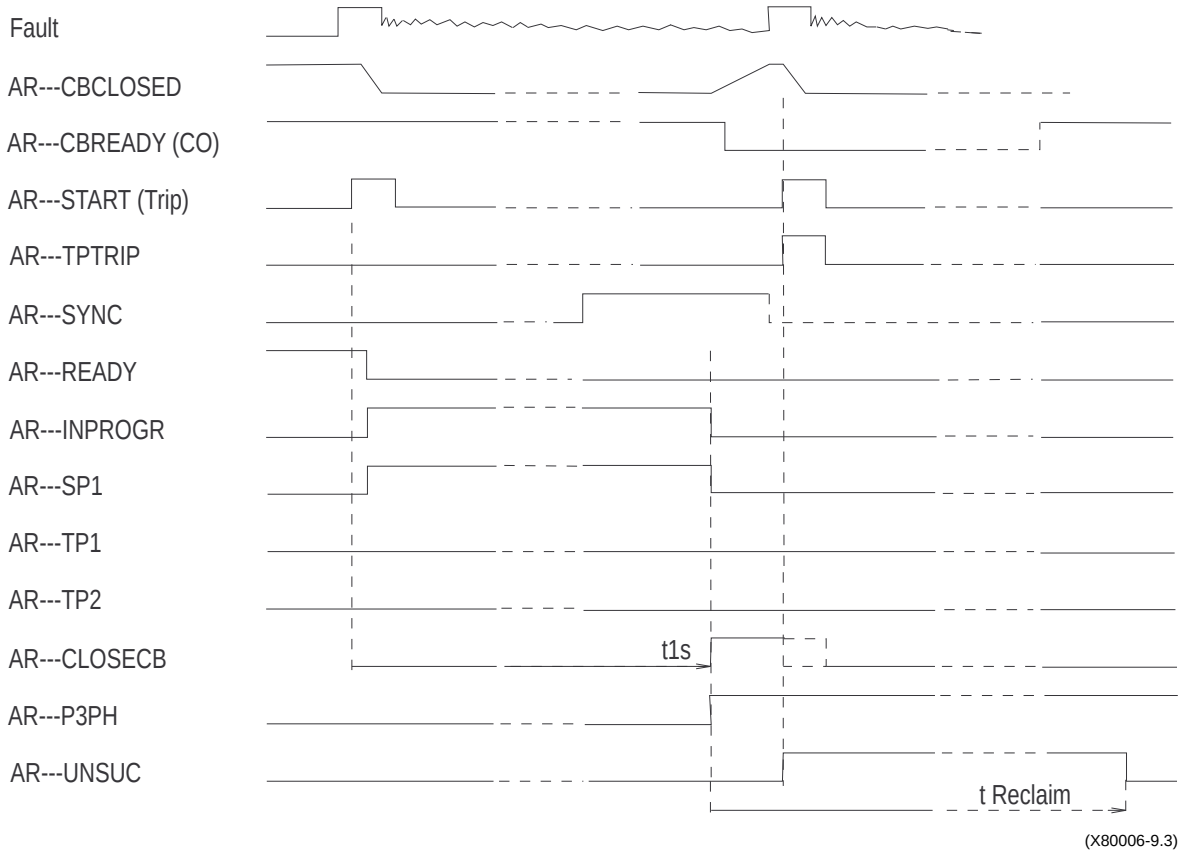

Fig. 10 Example of sequence. Permanent single-phase fault. Program 5 or 6. Single-phase single-shot reclosing.

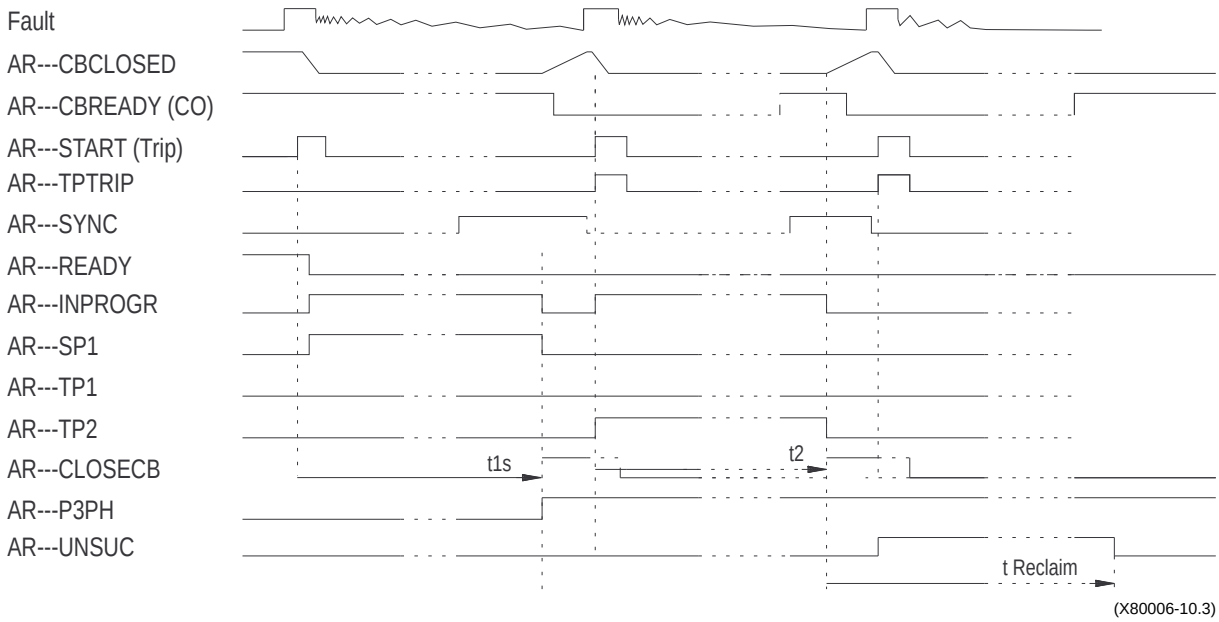

Fig. 11 Example. Permanent single-phase fault. Program 7or 8. 1-phase + 3-ph, Two-shot reclosing.

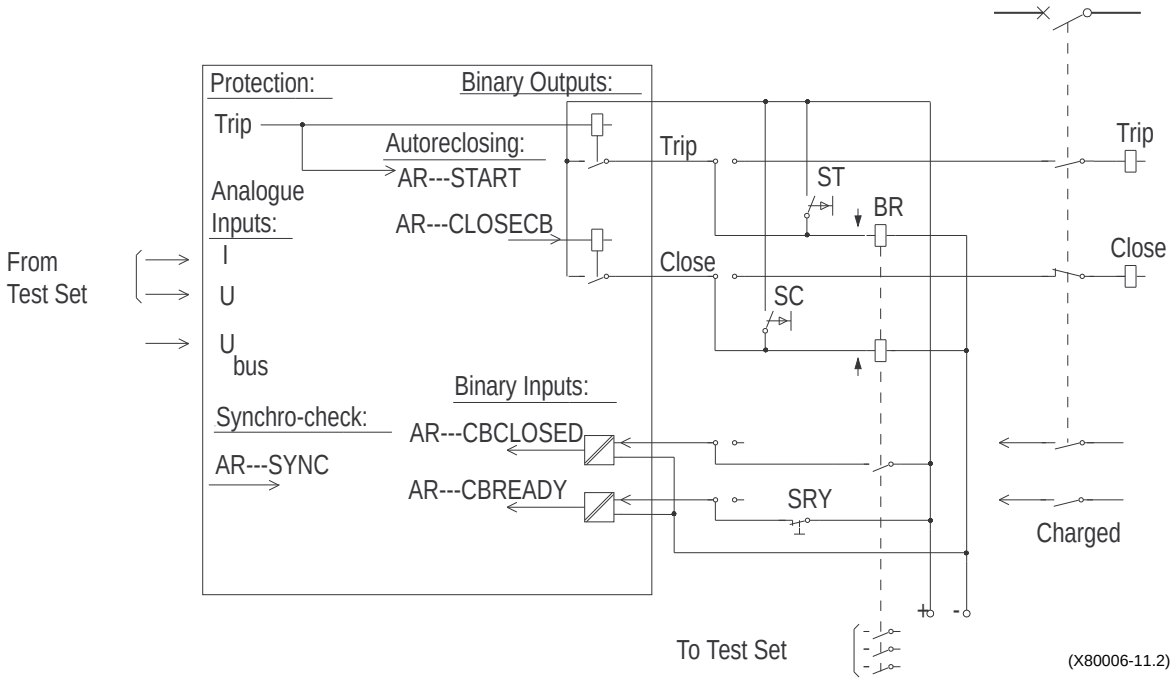

Fig. 12 Testing of auto-reclosing together with other functions.

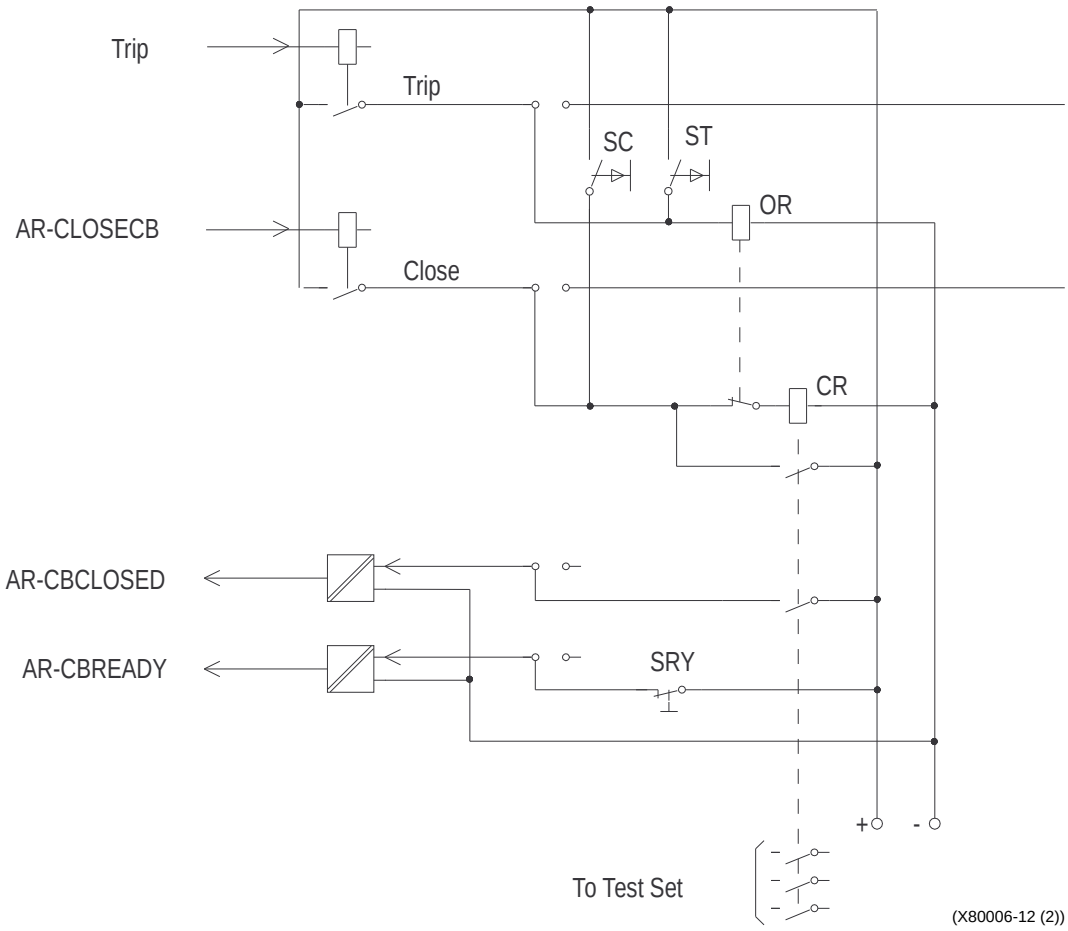

Fig. 13 Simulating breaker operation with two auxiliary relays.

1.6 Technical data

Table 2:

Function	Setting range
Number of autoreclosing shots	1 - 4
Number of autoreclosing programs	8
Auto-reclosing open time: 1-phase shot 1 - t1s 3-phase shot 1 - t1 3-phase shot 2 - t2 3-phase shot 3 - t3 3-phase shot 4 - t4	 (0,2-5,0) s in steps of 0,01 s (0,2-60) s in steps of 0,01 s (1,0-300) s in steps of 1 s (1,0-300) s in steps of 1 s (1,0-300) s in steps of 1 s
Reclaim time - tReclaim	(10-300) s in steps of 1 s
Inhibit reclosing, reset time - tInhibit	(5-30) s in steps of 1 s
Duration of reclosing pulse - tPulse	(0,1-1,0) s in steps of 0,01 s
SC/DL time limit - tSync	(0,5-5,0) s in steps of 0,1 s
Breaker closed before start - t_{CB}	5 s fixed
Resetting of “AR Started” after reclosing - tTrip	(0,2-1,0) s in steps of 0,1 s
Wait for Master release - tWait	(30 - 300) s in steps of 1 s

1.7 Appendix

1.7.1 Terminal diagrams

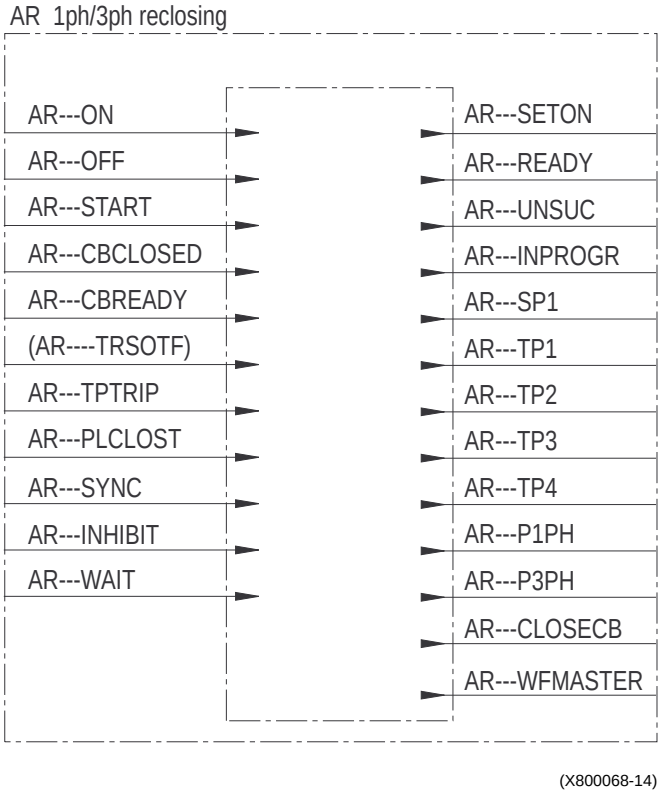

Fig. 14 Simplified terminal diagram of the function.

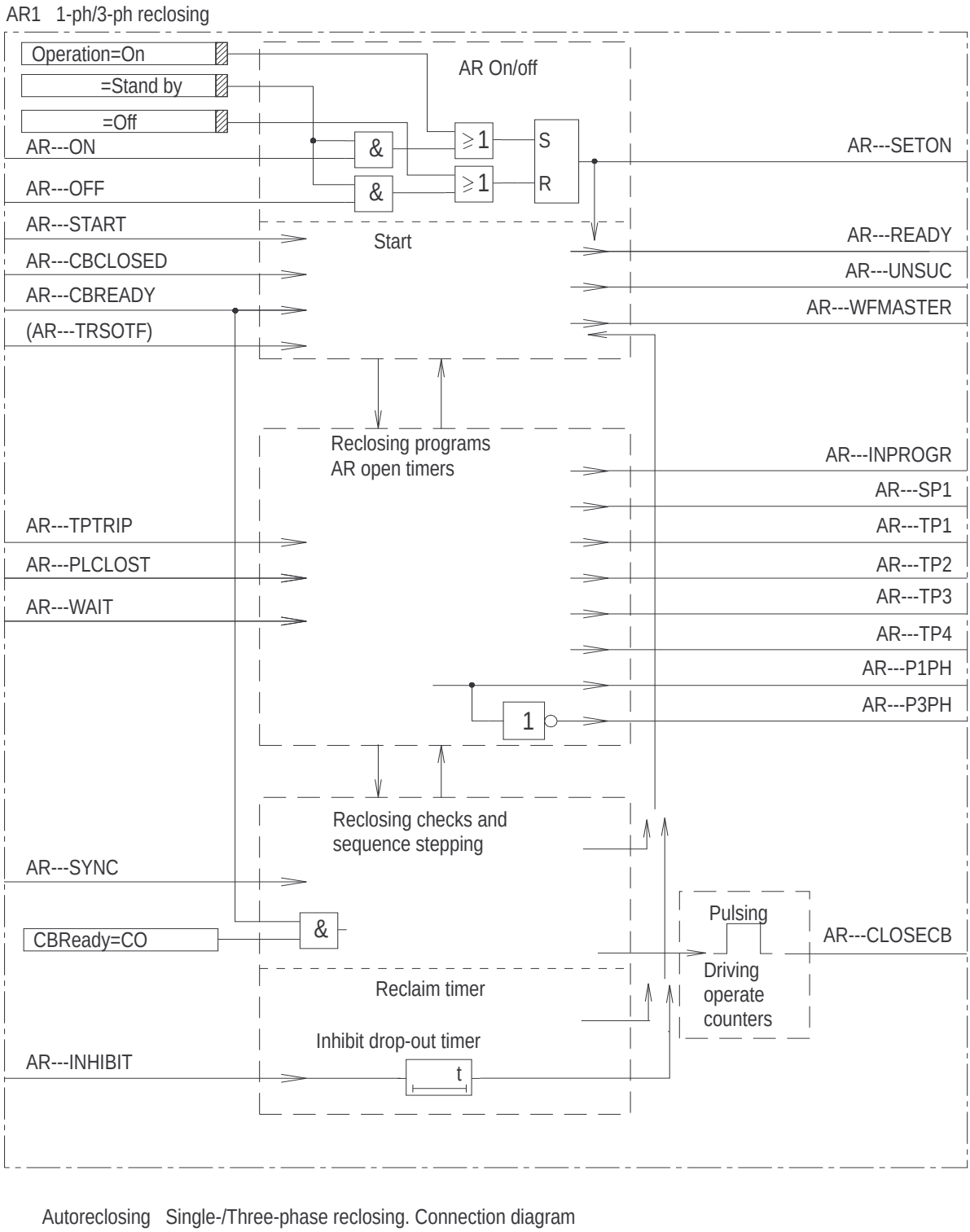

Fig. 15 Terminal diagram of the function.

1.7.2 Signal list

CONNECTIONS:	TO:	SETTING:	DESCRIPTION:
AR---START	BI		Protection trip to autorecloser
AR---ON	BI		Enable autorecloser
AR---OFF	BI		Disable autorecloser
AR---CBREADY	BI		CB ready for operation
AR---CBCLOSED	BI		CB closed
AR---INHIBIT	BI		Inhibit autorecloser
AR---PLCLOST	BI		Carrier guard signal out
AR---SYNC	BI		Synchro-check / Energization OK
AR---WAIT	BI		Reclosing wait command
AR---TPTRIP	BI		Three pole trip
(AR---TRSOTF)	BI		(Trip switch-onto-fault)

PRODUCTION:	TO:	SETTING:	DESCRIPTION:
AR---CLOSECB	BO		Close CB command
AR---SETON	BO		Autorecloser set on
AR---INPROGR	BO		Autorecloser operation in progress
AR---P1PH	BO		Permit 1Ph trip
AR---P3PH	BO		Prepare terminal for 3Ph trip
AR---READY	BO		Autorecloser prepared for reclose cycle
AR---SP1	BO		1-phase reclosing in progress
AR---TP1	BO		3-phase, shot 1 reclosing in progress
AR---TP2	BO		3-phase, shot 2 reclosing in progress
AR---TP3	BO		3-phase, shot 3 reclosing in progress
AR---TP4	BO		3-phase, shot 4 reclosing in progress
AR---UNSUC	BO		Autorecloser unsuccessful
AR---WFMASTER	BO		Wait from Master unit

1.7.3 Setting table

PARAMETER:	SETTING RANGE:	SETTING				
		ACTUAL				
		Group 1	Group 2	Group 3	Group 4	DESCRIPTION:
Operation	Off / Standby / On					
Program	1/2/3/4 x 3ph, 1ph, 1ph/3ph, 1ph+3ph, 1ph /3ph + 3ph					Type of reclosing program
Extended t1	On / Off					Extended t1S and t1
t1S	0,20 - 5,00 s					Shot 1, Single-phase autorecloser open time
t1	0,20 - 60,00 s					Shot 1, Three-phase autorecloser open time
t2	1 - 300 s					Shot 2, autorecloser open time
t3	1 - 300 s					Shot 3, autorecloser open time
t4	1 - 300 s					Shot 4, autorecloser open time
tSync	0,5 - 5,0 s					Max. time for synchro-check
tPulse	0,10 - 1,00 s					Reclose pulse duration
CutPulse	On / Off					Cut close pulse at new start
tReclaim	10 - 300 s					Reclaim time
tInhibit	5 - 30 s					Inhibit reset time
CBReady	CO / OCO					Type of CB Ready condition
tTrip	0,2 - 1,0 s					Max. duration of Trip or "Start"
Priority	None/Low/High					Priority at sequential reclosing
tWait	30-300 s					Limit time "Wait for master"