Contents *Page*

1 VOLTAGE SELECTION 2

1.1 Application 2
1.1.1 Voltage circuits in a 1 1/2-breaker diameter with line voltage transformers on the line side of the line disconnectors 2
1.1.2 Voltage selection for a double busbar with a single-breaker arrangement 6
1.1.3 Voltage connection for a double busbar with a double-breaker arrangement 7

1.2 Theory of operation 9

1.3 Setting 12

1.4 Testing 13
1.4.1 General 13
1.4.2 Voltage selection (VS) for 1 1/2 circuit breaker arrangement 14
1.4.3 Voltage selection (VS) for a double bus arrangement 16

1.5 Appendix 17
1.5.1 Terminal diagrams 17
1.5.2 Signal list 19
1.5.3 Setting table 20

1 VOLTAGE SELECTION

1.1 Application

The voltage selection function is used together with the synchronism (SYNC) and energizing check function. When the REB 551 is used in a double-bus or 1 1/2 breaker arrangement, the voltage that should be selected depends on the positions of the breakers and/or disconnectors. By checking the position of the disconnectors and / or breakers from the auxiliary contacts, the REB 551 can select the right voltage for the synchronism and energizing function. One binary I / O card with relays is used for this purpose (binary I/O module no:5). This binary I/O module is included when the voltage selection option is ordered. With the MMI dialogue synchrocheck - Uselection “Single”, “BrkHalfB” or “Dble”, the type of voltage selection is chosen. The setting of the synchronism and energizing check function is done according to the section 1MDX80017-EN, “Synchronism and energizing check”.

1.1.1 Voltage circuits in a 1 1/2-breaker diameter with line voltage transformers on the line side of the line disconnectors

The principle for the connection arrangement is shown in Fig. 1. Three breaker terminal units are used for one section of 1 1/2 circuit breaker arrangement, one for each circuit breaker. This will utilise for sequential autoreclosing and synchronism with voltage selection for each circuit breaker. For the synchronism (SYNC) and energizing check, the voltage on the two sides of the breaker which should be closed, is used. When the line voltage transformers (VTs) are on the line side of the line disconnectors, and not at the “Tee point”, a voltage selection is necessary.

For the breaker close to the busbar, e.g. CB1 in Fig. 1,(the same principle also applies to CB 3) the voltage at the “Tee point” can be connected to and energized from the line F1 or from the other side of the central breaker section, e.g. line F2 or busbar B2 (depending on the position of the line disconnector on F2). It may also be isolated both from line F1 and from the central circuit breaker.

When we consider the central circuit breaker, the upper “Tee point” can be energized from line F1 or busbar B1, or be isolated. The lower “Tee point” can be energized from line F2 or busbar B2, or be isolated. The REB 551 unit is equipped with modules for analogue input circuits including VT circuits, and with relays for binary inputs and binary outputs (binary I/O module). The relays of one dedicated binary I/O module (no:5) are used to switch the VT circuits. This is controlled by logic in the voltage selection function. Positions of the line disconnector and the breaker section (the breaker and the two disconnectors near it) are used to control the logic and thus the voltage selection. This information must be connected to the binary inputs of the I/O module:5, which has the default configuration for these signals.

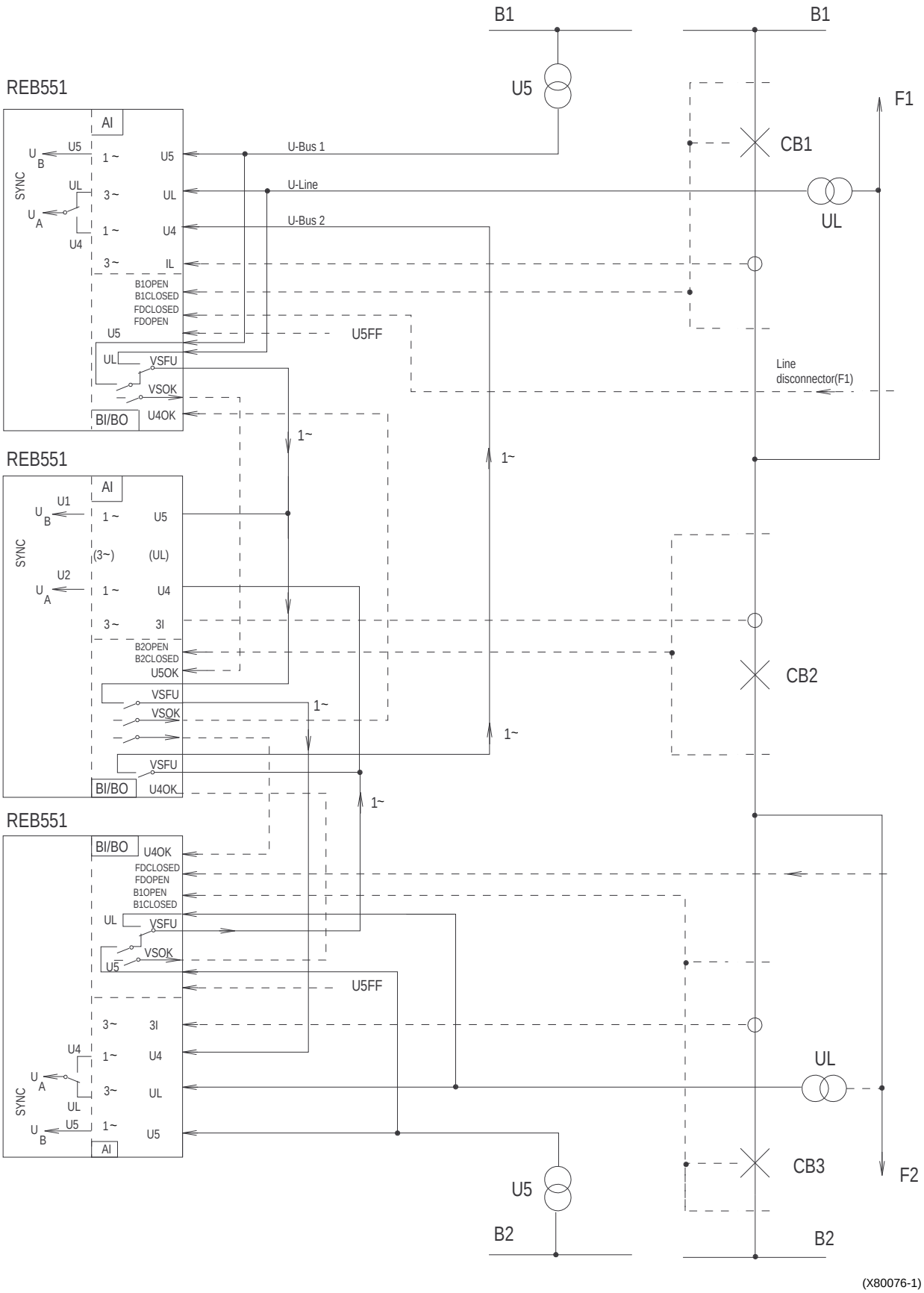

Fig. 1 Voltage selection in 11/2 circuit breaker arrangement.

Abbreviations:

UL (U-Line)	Line voltage (UL1,UL2,UL3)
U5	Reference voltage from busbar 1 (B1)
U4	Reference voltage from busbar 2 (B2)
IL	Line current (IL1,IL2,IL3,IN)
I/O	Binary input /output module no:5
AI	Analogue input
FDOPEN	Line disconnector open
FDCLOSED	Line disconnector closed
B1OPEN	Breaker section 1 open (breaker and disconnector)
B1CLOSED	Breaker section 1 closed (breaker and disconnector)
B1	Busbar 1
B2	Busbar 2
F1	Line 1
CB1	Circuitbreaker 1

CB1, the upper circuit breaker

The busbar voltage U-bus 1 is fed to the analogue single-phase voltage input U5 (Reference voltage from busbar 1) in REB 551.
The line voltage transformers are connected as a three-phase voltage to the analogue input UL (U-Line)

A single-phase voltage from the central section, originated from the opposite side, is connected to the analogue input U4 (Reference voltage from busbar 2). These five voltages (one three-phase and two single-phase voltage) are sampled and AD converted in the breaker terminal unit.

In REB 551 there is an internal selection of the line voltage (U-Line) or the voltage on the other side of the central circuit breaker, U4, to the synchronism function. If the line disconnector (F1) is closed, the line voltage U-Line is used as reference. If the line disconnector (F1) is open the voltage must be selected from the from the other side of the central circuit breaker, e.g. from the line (F2) or from busbar 2 (B2).

In order to create a reference voltage for the central circuit breaker (CB2), there is a voltage selection switching by the binary I/O relays (module no:5) in REB 551. The line feeder voltage (U-Line), or the busbar voltage (U-bus1), is passed on to the central breaker.

The position of the line disconnector is taken from auxiliary contacts to the binary input “FDCLOSED” (Line disconnector closed) and “FD OPEN” (Line disconnector open). The position of each breaker section (the breaker and the two disconnectors near it) is checked by each REB 551 via the binary inputs “B1OPEN” (Breaker section 1 open) and “B1CLOSED” (Breaker section 1 closed).

CB2, the central circuit breaker

From each side of the section (bus 1 and bus 2), a voltage is received via the REB 551 breaker terminal for that section. The voltage is connected to the analogue single-phase voltage inputs U5 and U4, belonging to the central breaker terminal unit. This unit is dedicated to the central circuit breaker. The U5 voltage has been selected from the upper section, either from Ubus 1(B1) or U-line(F1). The U4 voltage has been selected from the lower section, either from Ubus (B2) or U-line (F2).

The selection is made in the logic of the upper breaker terminal unit by checking the positions of the auxiliary contacts of the disconnectors. The U5 or the UL voltage from the upper section is chosen and the voltage is connected to the U5 input of the centre REB 551, via the SYNC-VSFU output contact of the upper breaker terminal unit.

The U4 voltage has been selected from the lower section, either from busbar B2 or line F2. The selection is made in the logic of the lower breaker terminal unit by checking the positions of the auxiliary contacts of the disconnectors. This voltage is connected to the U4 input of the central terminal unit, via the SYNC-VSFU output contact of the lower breaker terminal unit.

The voltage is also connected to the SYNC function in the central breaker terminal unit, which will check the conditions before the circuit breaker is closed. The position information of the central breaker and the two disconnectors (“B1OPEN” or “B1CLOSED”) is used to control switching relays in the binary I/O unit to pass on the right voltage to the upper breaker terminal unit or to the lower one, and vice versa.

CB3, lower circuit breaker

The voltage selection principle of the REB 551 belonging to the lower circuit breaker is the same as described under upper circuit breaker CB1 above, with the difference that the selection of voltage is made from either busbar 2 or from line 2 (F2).

Fuse failure and Voltage OK signals

For the U-Bus1 (U5) input, e.g. from busbar1 VT, (Fig. 1), an input for an extra fuse failure signal (or tripped fuse switch / MCB) can be used, U5FF (external fuse failure input). In case of a input signal to the U5FF fuse failure, the energizing check (dead bus check) is blocked. An inverted signal, Voltage Circuit OK (SYNC-VSOK), can be used alternatively. Where a three-phase voltage (UL1,UL2,UL3) is connected, the internal fuse failure function can be used with the feeder voltage UL. The internal fuse failure function is a basic function in the REB 551 unit and is selected on the MMI.

In the breaker terminal unit, a logic and output signal for “Voltage selection OK and no fuse failure” is arranged, SYNC- VSOK. This signal is transferred, together with the selected voltage, to the adjacent breaker terminal unit. In case of fuse failure or loss of auxiliary power, the signal is interrupted.

Should, for instance, the line disconnector (F1) be open, and the input SYNC-U4OK (no external fuse failure) to the upper breaker terminal unit from the central terminal unit be missing, there is no reliable source on the “Tee side” voltage, and energizing check is blocked. The synchronizing check is also blocked due to a lack of voltage to the set voltage conditions. The default configuration is for a double breaker system so when using the breaker terminal unit for a 1 1/2 breaker system, two signals must be changed in the configuration. This is shown on the terminal diagram for the breaker terminal (1MRK 000499-AA page 71). This can be made on the MMI or with help of the SMS system.

1.1.2 Voltage selection for a double busbar with a single-breaker arrangement

The principle for the connection arrangement is shown in Fig. 2. One breaker terminal unit is used and can be combined with one or two line protections. For the synchronism check (SYNC) and energizing check function, the voltages on the two busbars are selected by breaker terminal unit. The bus voltage (U-bus1) from bus 1 is fed to the analogue single-phase input U5, and the bus voltage (U-bus2) from bus 2 is fed to the single-phase input U4. The line voltage transformers are connected as a three-phase voltage (UL1,UL2,UL3) to the analogue input U-Line (UL). The selection of the bus voltage is made by checking the position of the disconnectors' auxiliary contacts. These should be connected to the binary inputs “SYNC-B1OPEN” (Breaker section 1 open), “SYNC-B1CLOSED” (Breaker section 1 closed) and “SYNC-B2OPEN“ (Breaker section 2 open), “SYNC-B2CLOSED“ (Breaker section 2 closed). These signals are in the default configuration connected to the binary I/O module no:5. An input for an extra fuse failure signal (or tripped fuse switch / MCB) can be used, SYNC-U4FF or SYNC-U5FF (external fuse failure input). Where a three-phase voltage is connected, (U-Line) the internal fuse failure can be used as the feeder voltage (U-Line). In the default configuration the signal FUSE-VTSU is connected to the SYNC-VTSU input. The internal fuse failure function is a basic function in the breaker terminal unit and is selected on the MMI.

In case of a fuse failure (FUSE-VTSU), the energizing check (dead bus check) is blocked via the input (SYNC-VTSU). The synchronizing check is also blocked due to a lack of voltage compared to the set voltage conditions. The configuration of signals to the output relays may be different for different busbar systems and the actual configuration for the substation must be done during testing or commissioning. The default configuration covers the double-bus arrangement as described above.

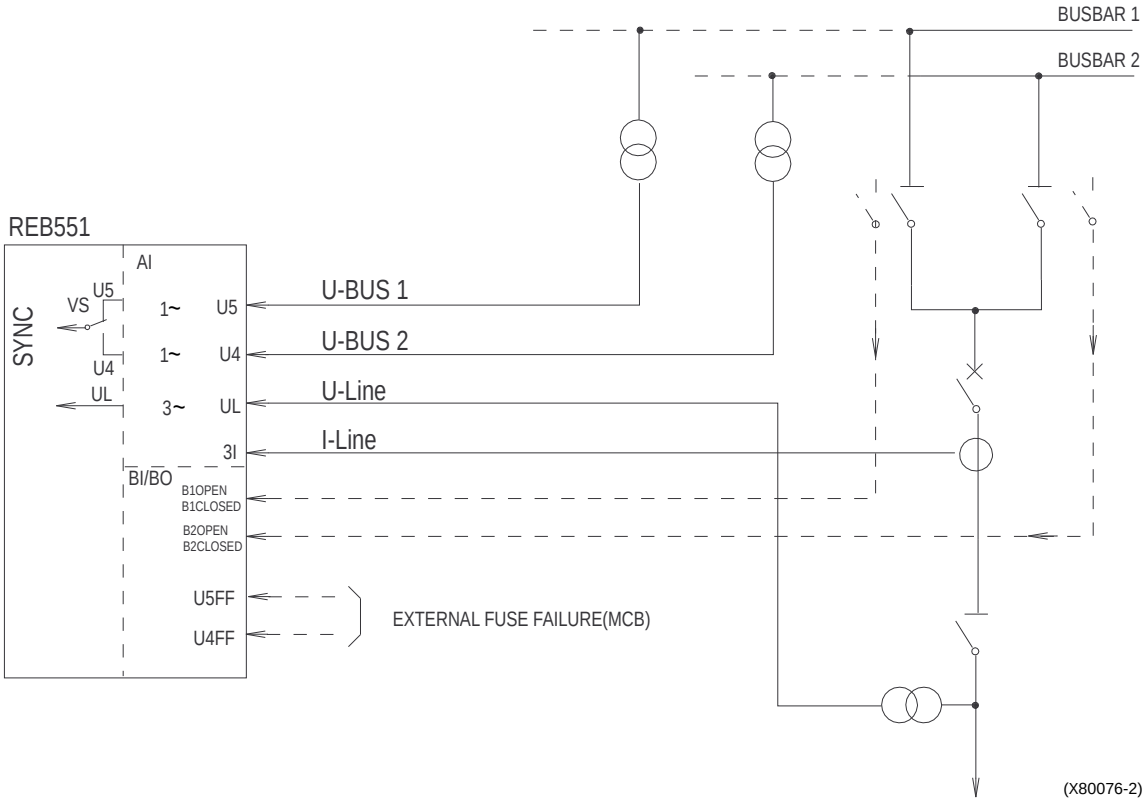

Fig. 2 Voltage selection in a double bus, single breaker arrangement.

1.1.3 Voltage connection for a double busbar with a double-breaker arrangement

The principle for the connection arrangement is shown in Fig. 3. Usually there is one current transformer set per circuit breaker, as shown. One breaker terminal unit for each circuit breaker is used. There is one voltage transformer at each side of the circuit breaker, and the voltage transformer circuit connections are straightforward, without any special voltage selection. For the synchronism-check (SYNC) and energizing check, the voltage from bus 1 (U-Bus1) is connected to the single phase analogue input (U5) on the breaker terminal unit and the voltage from bus 2 (U-bus2) is connected to the single-phase analogue input (U4) on the second breaker terminal unit. The line voltage transformers are connected as a three-phase voltage to the analogue input UL (U-Line) voltage of both the terminal units. The synchronism condition is set on each MMI of the breaker terminal units, and the voltage is taken from bus 1 (U-bus1) and the line (U-Line) or from bus 2 (U-bus2) and the line (U-line). This means that the two breaker terminal units are operating without any special voltage selection, but with the same line (U-line) voltage.

Where a three-phase voltage is connected, (U-Line) the internal fuse failure can be used as the feeder voltage (U-Line). In the default configuration the signal FUSE-VTSU is connected to the SYNC-VTSU input. The internal fuse failure function is a basic function in the breaker terminal unit and is selected on the MMI.

In case of a fuse failure (FUSE-VTSU), the energizing check (dead bus check) is blocked via the input (SYNC-VTSU). The synchronizing check is also blocked due to a lack of voltage compared to the set voltage conditions. An input for an extra fuse failure signal (or tripped fuse switch) can be used, SYNC-U4FF or SYNC-U5FF (external fuse failure input).

The configuration of signals to the output relays may be different for different busbar systems and the actual configuration for the substation must be done during testing or commissioning.

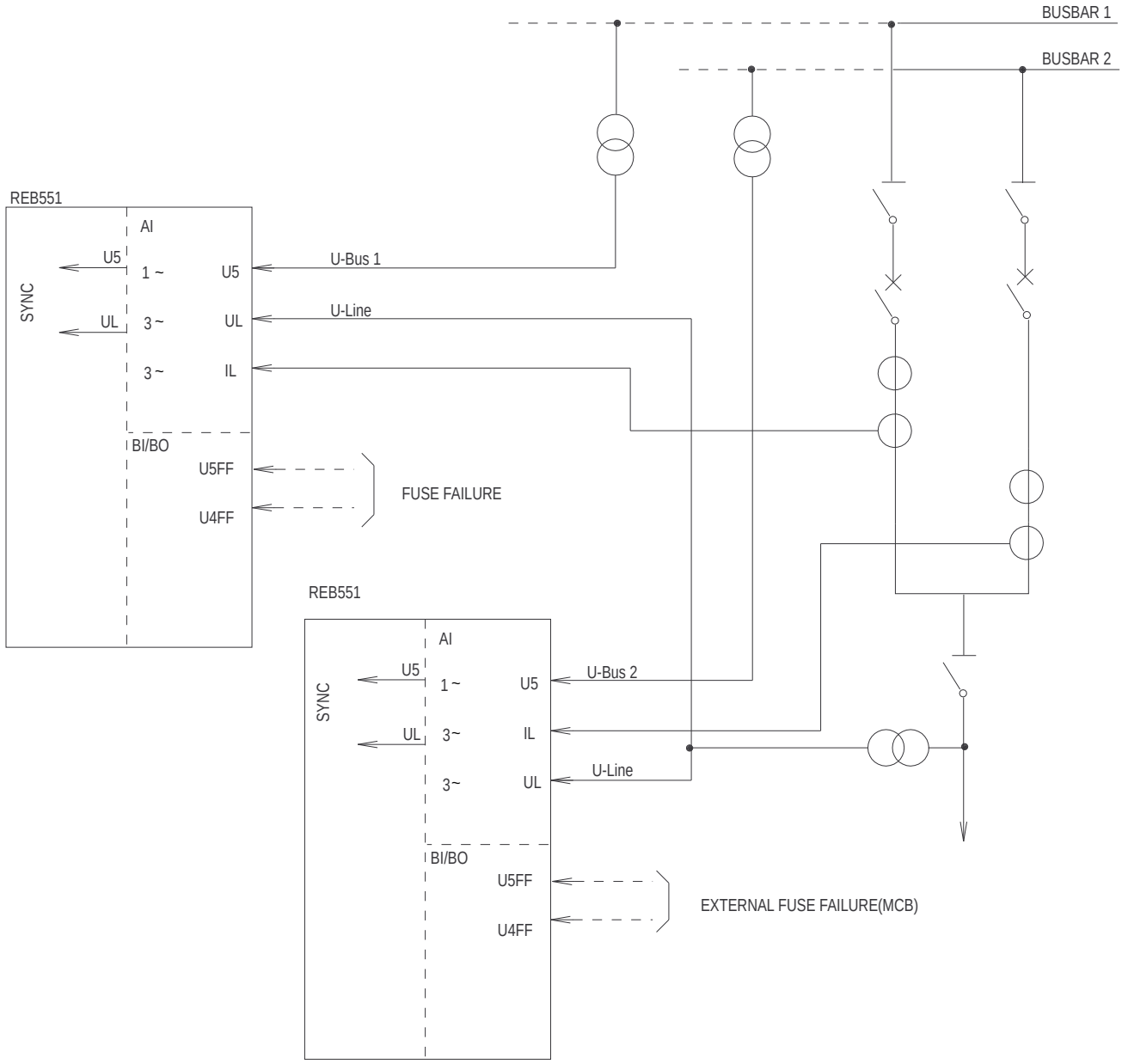

Fig. 3 Voltage circuit in a double breaker arrangement.

1.2 Theory of operation

Input and output signals

A simplified logic diagram of the voltage selection for doublebus is shown in Fig. 4. The signal SYNC-CHECKOK is the same as from the “synchronism and energizing check“ function but when the voltage selection is selected on the MMI, the conditions for voltage selection are involved. In Fig. 5 the simplified logic diagram for voltage selection a 1 1/2 circuit breaker arrangement is shown. The SYNC-CHECKOK condition here involves conditions for a 1 1/2 breaker arrangement.

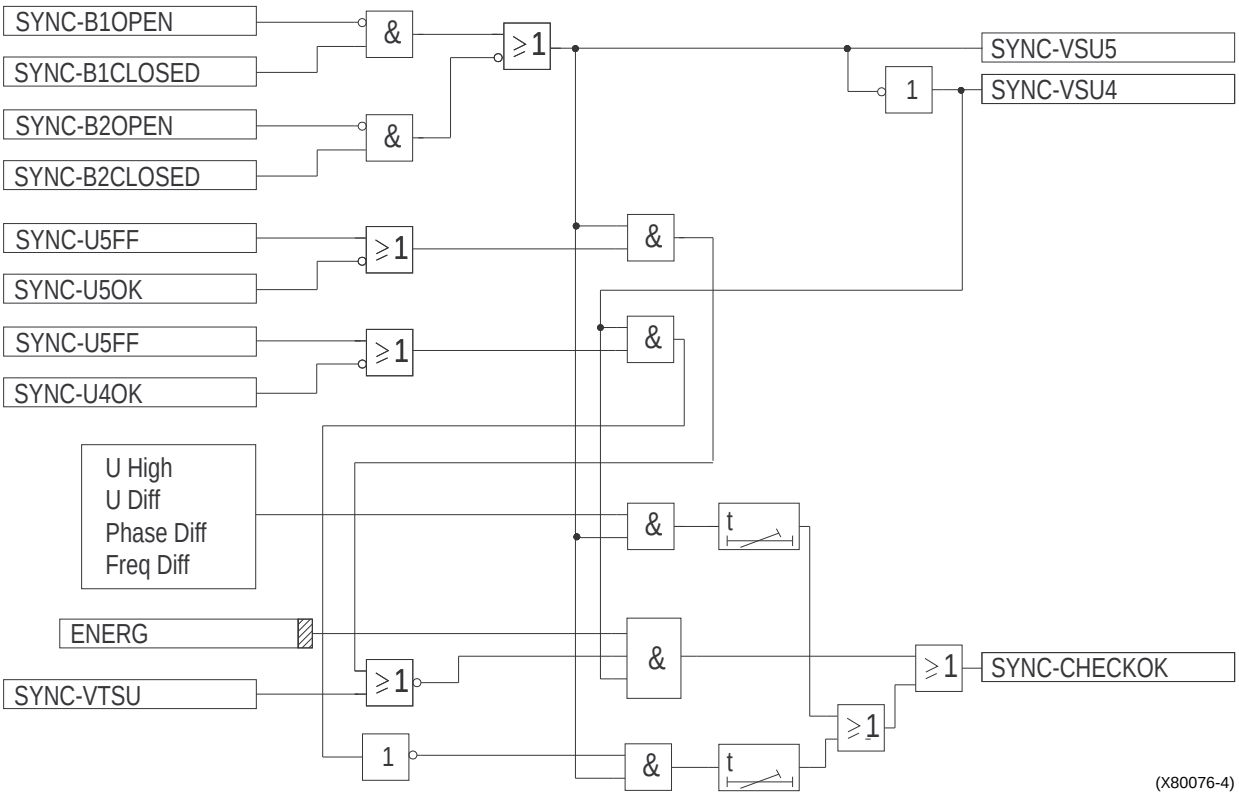

Fig. 4 Logic for voltage selection doublebus.

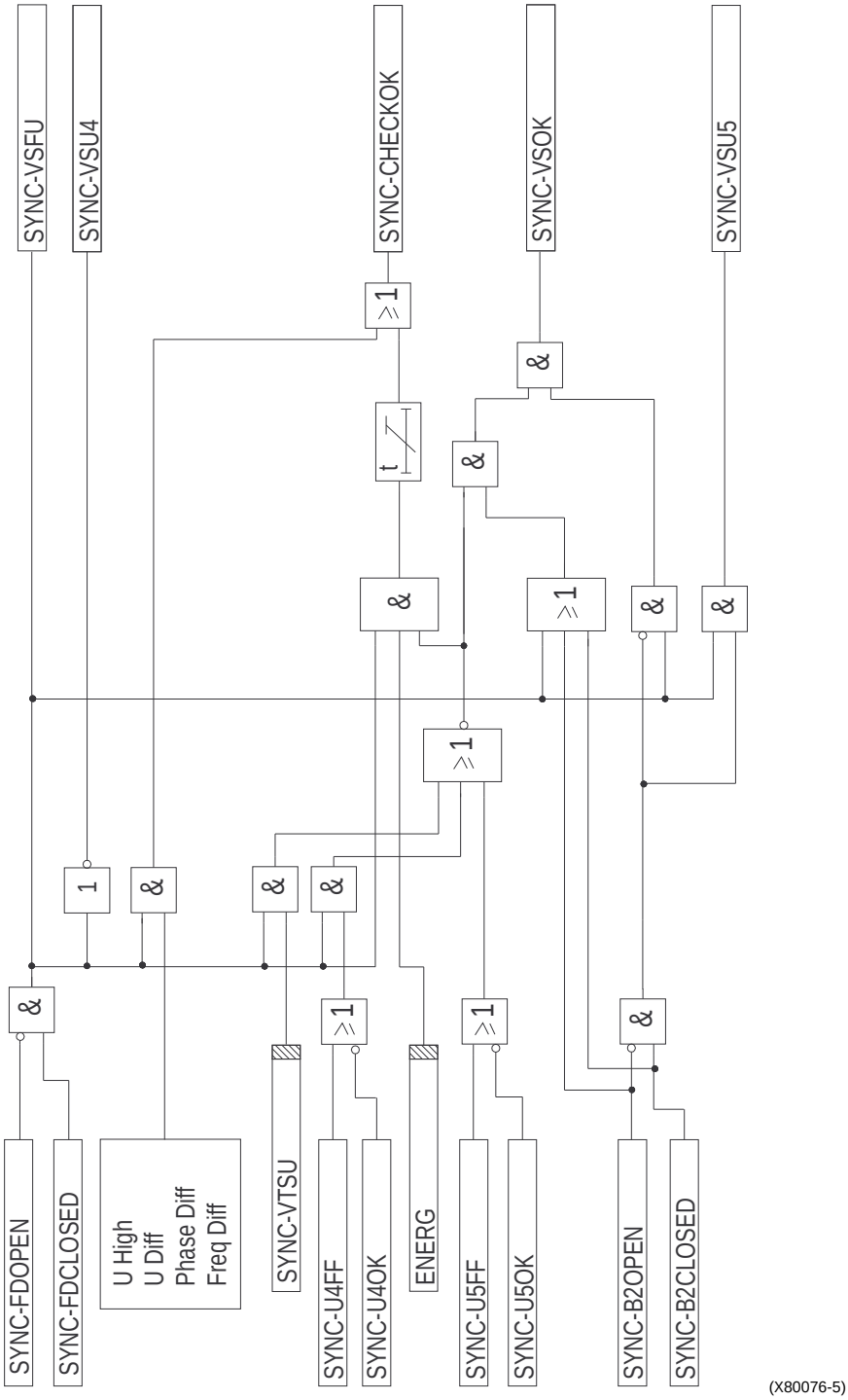

Fig. 5 Logic for voltage selection 1 1/2 circuit breaker arrangement.

Description of the input and output signals shown in the logic diagrams above:

Input signal	Description
SYNC-U5FF	External fuse failure input from busbar voltage bus 1 (U5). This signal can come from a tripped fuse switch (MCB) on the secondary side of the voltage transformer. In case of a fuse failure the energizing check is blocked.
SYNC-U5OK	No external voltage fuse failure (U5). Inverted signal.
SYNC-U4FF	External voltage fuse failure from busbar voltage bus 2 (U4). This signal can come from a tripped fuse switch (MCB) on the secondary side of the voltage transformer. In case of fuse failure the energizing check is blocked.
SYNC-U4OK	No external voltage fuse failure (U4). Inverted signal.
SYNC-FDOPEN	Feeder disconnector open. Connected to the auxiliary contacts of the line disconnector in a 1 1/2 circuit breaker system. To inform the voltage selection that the line disconnector is open.
SYNC-FDCLOSED	Feeder disconnector closed. Connected to the auxiliary contacts of the line disconnector in a 1 1/2 circuit breaker system. To inform the voltage selection that the line disconnector is closed.
SYNC-B1OPEN	Breaker section 1 open. Connected to the auxiliary contacts of a breaker section (CB and disconnector) in an double bus or 1 1/2 circuit breaker arrangement, to inform the voltage selection the positions.
SYNC-B1CLOSED	Breaker section 1 closed. Connected to the auxiliary contacts of a breaker section (CB and disconnector) in an double bus or 1 1/2 circuit breaker arrangement to inform the voltage selection the positions.
SYNC-B2OPEN	Breaker section 2 open. Same function as breaker section 1 opened.
SYNC-B2CLOSED	Breaker section 2 closed. Same function as breaker section 2 closed.

Output signal	Description
SYNC-VSU5	Voltage selection Uref from bus 1 (U5). The signal is used to inform the adjacent breaker terminal which voltage reference is selected.
SYNC-VSU4	Voltage selection Uref from bus 2 (U4). The signal is used to inform the adjacent breaker terminal which voltage reference is selected.
SYNC-VSFU	Voltage selection Ufeeder from the line feeder (UL). The signal is used to inform the adjacent breaker terminal which voltage reference is selected.
SYNC-VSOK	Voltage selection OK and no fuse failure. This signal is sent to the adjacent breaker terminal unit in case of an 1 1/2 circuit breaker arrangement.
SYNC-VTSU	Internal fuse failure detection. Blocks the energizing function.

1.3 Setting

The setting parameters are accessible through the MMI. The choice of the voltage selection functions are found in the MMI-tree under:

Settings
Functions
Group 1, 2, 3 and 4
Synchrocheck - USelection

In the MMI dialogue the following selections can be made:

SingleBus	Singlebus
BrkHalfB	1 1/2 breaker
DbleBus	Double bus

1.4 Testing

1.4.1 General

Test equipment

The following general test connection principle can be used during testing.

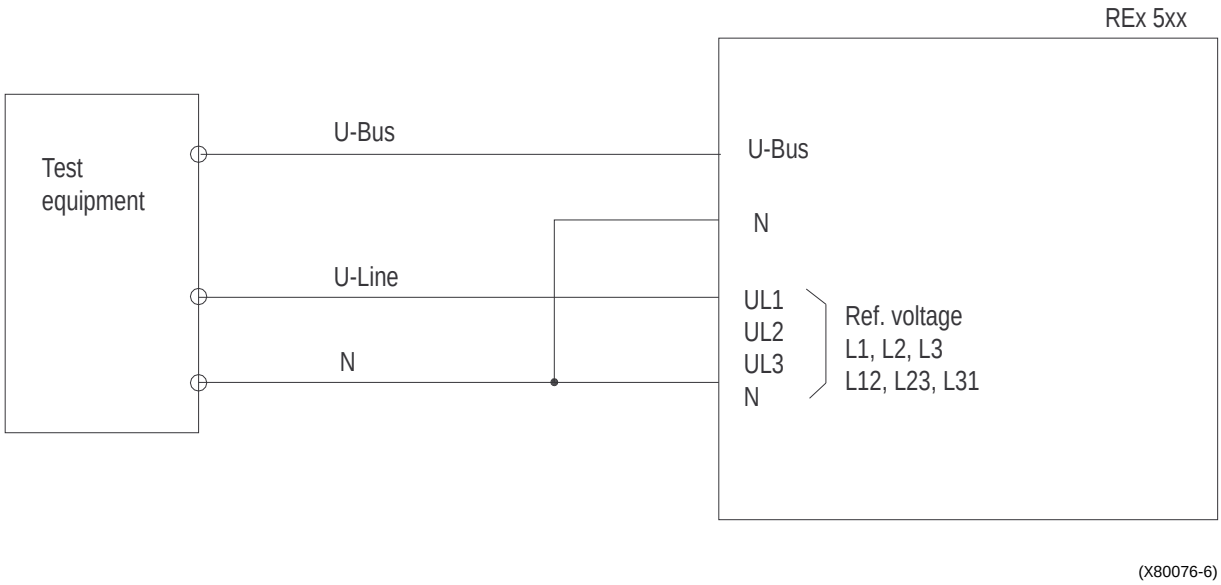

Fig. 6 Test connection for voltage selection

The operating values of the current and voltage measuring elements and corresponding functions have to be checked during the commissioning as well as during regular maintenance tests. ABB Relays recommends, although it does not absolutely request, the use of testing equipment of type RTS 21 (FREJA) for purposes of secondary injection testing.

The test equipment used should be capable of providing an independent three-phase supply of voltages and currents to the tested terminal. Furthermore, it must be possible to change the values of voltages, currents and phase angles between the measuring quantities, independent of each other, for each phase separately. The test voltages and currents should have a common source, with a very small content of higher harmonics. If the test equipment can not indicate the phase angles between the measured quantities, a separate phase angle meter will be needed.

1.4.2 Voltage selection (VS) for 1 1/2 circuit breaker arrangement

The voltage selection can be checked by connecting the general test connection shown in fig 3. The two voltages connected should have the same FreqDiff. Truth table to verify the voltage selection for the 1 1/2 circuit breaker arrangement. The setting of the synchronism function can be done according to the test section of 1MDX80017-EN, " Synchronism and energizing check". The following truth table can be used in order to verify the voltage selection signals for the 1 1/2 circuit breaker arrangement.

The following MMI settings should be used:

Settings
Functions
Group 1, 2, 3 and 4
Synchrocheck - USelection

Operation = On
InputPhase = UL1
Uselection = BreakerHalfBus

The signals shown in the table are configured on the binary I/O module No:5. Note that certain combinations needs the following conditions to operate:

X not applicable
(1) Requires SYNC = 1
(2) Requires ENER = 1
(3) Requires B2OPEN=1 or B2CLOSED =1

Binary inputs								**Func**	**Binary outputs**				
FDCLOSED	**FDOPEN**	**B2CLOSED**	**B2OPEN**	**U5FF**	**U5OK**	**U4FF**	**U4OK**	**VTSU**	**VSFU**	**VSU1**	**VSU2**	**CHECKOK**	**VSOK**
1	0	X	X	0	1	0	1	0	1	0	0	1 (1)/(2)	1 (3)
1	0	X	X	1	1	0	1	0	1	0	0	1 (1)	0
1	0	X	X	0	1	0	0	0	1	0	0	1 (1)/(2)	1 (3)
1	0	X	X	0	1	0	1	1	1	0	0	1 (1)	0
0	1	1	0	0	1	0	1	0	0	1	1	0	1
0	1	1	0	1	1	0	1	0	0	1	1	0	0
0	1	1	0	0	1	0	0	0	0	1	1	0	0
0	1	1	0	0	1	0	1	1	0	1	1	0	1
0	1	0	1	0	1	0	1	0	0	0	1	0	1
0	1	0	1	1	1	0	1	0	0	0	1	0	1
0	1	0	1	0	1	0	0	0	0	0	1	0	1
0	1	0	1	0	1	0	1	1	0	0	1	0	1

1.4.3 Voltage selection (VS) for a double bus arrangement

The following truth table can be used in order to verify the voltage selection signals for the double bus arrangement.The following MMI settings can be used:

Settings
Functions
Group 1,2,3 and 4
Synchrocheck - USelection

Operation = On
InputPhase = UL1
Uselection = DoubleBus

The signals shown in the table are configured on the binary I/O module No.5. Note that certain combinations needs the following conditions to operate.

X not applicable
(1) Requires SYNC = 1, requires ENER = 1

Binary inputs								**Func**	**Binary outputs**			
B1CLOSED	**BOPEN**	**BCLOSEDD**	**B2OPEN**	**U5FF**	**U5OK**	**U4FF**	**U4OK**	**VTSU**		**VSU5**	**VSU4**	**CHECKOK**
1	0	X	X	0	1	0	1	0		0	0	1 (1)/(2)
1	0	X	X	1	1	0	1	0		1	0	1 (2)
1	0	X	X	0	1	0	0	0		1	0	1 (1)/(2)
1	0	X	X	0	1	0	1	1		1	0	1 (2)
0	1	1	0	0	1	0	0	1		0	1	0
0	1	1	0	1	1	0	1	0		0	1	0
0	1	1	0	0	1	0	0	0		0	1	0
0	1	1	0	0	1	0	1	1		0	1	0
0	1	0	1	0	1	0	1	0		1	0	1(1)/(2)
0	1	0	1	1	1	0	1	0		1	0	1(2)
0	1	0	1	0	1	0	0	0		0	1	1(1)/(2)
0	1	0	1	0	1	0	1	1		1	0	1(2)

1.5 Appendix

1.5.1 Terminal diagrams

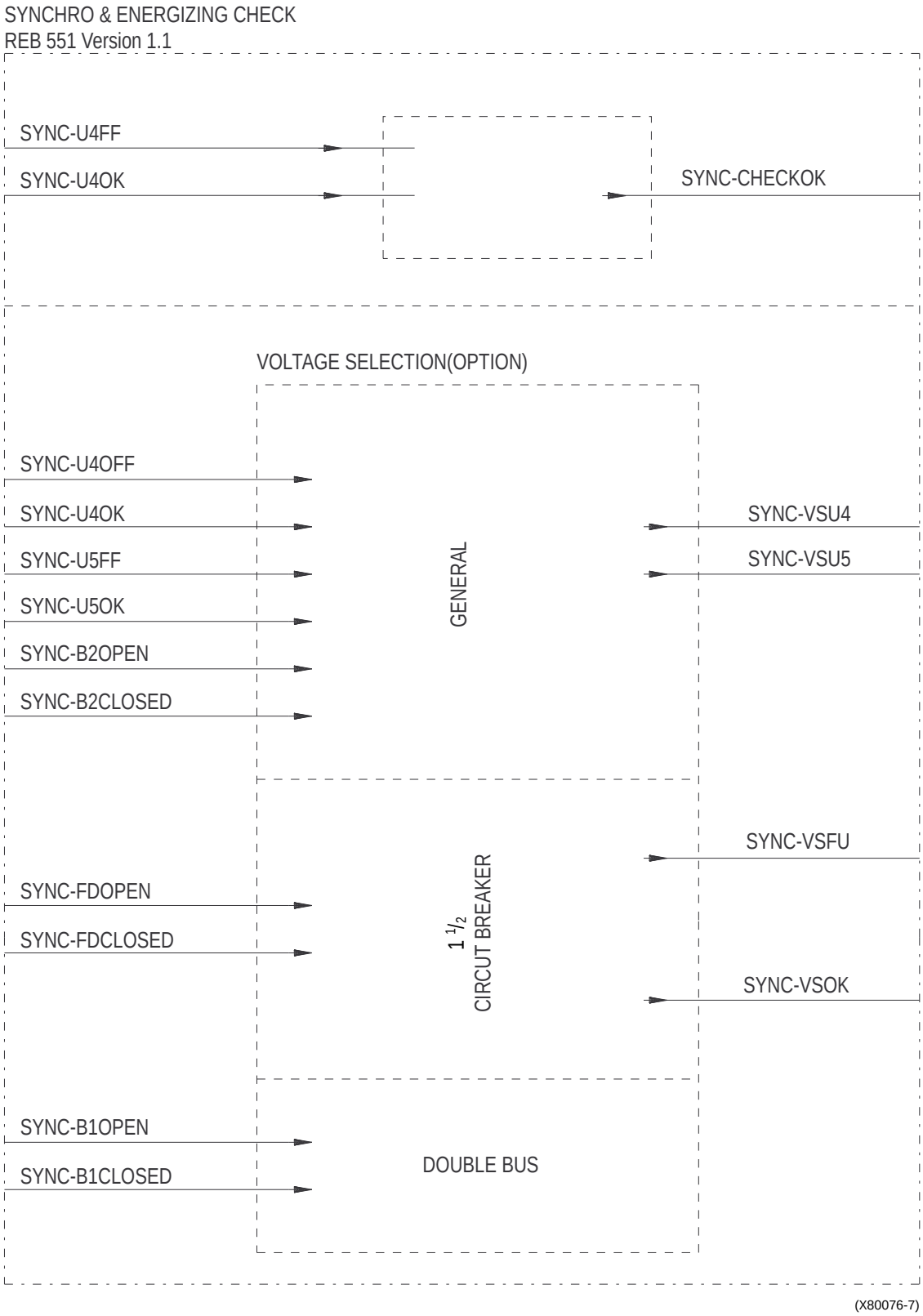

Fig. 7 Simplified terminal diagram of the function.

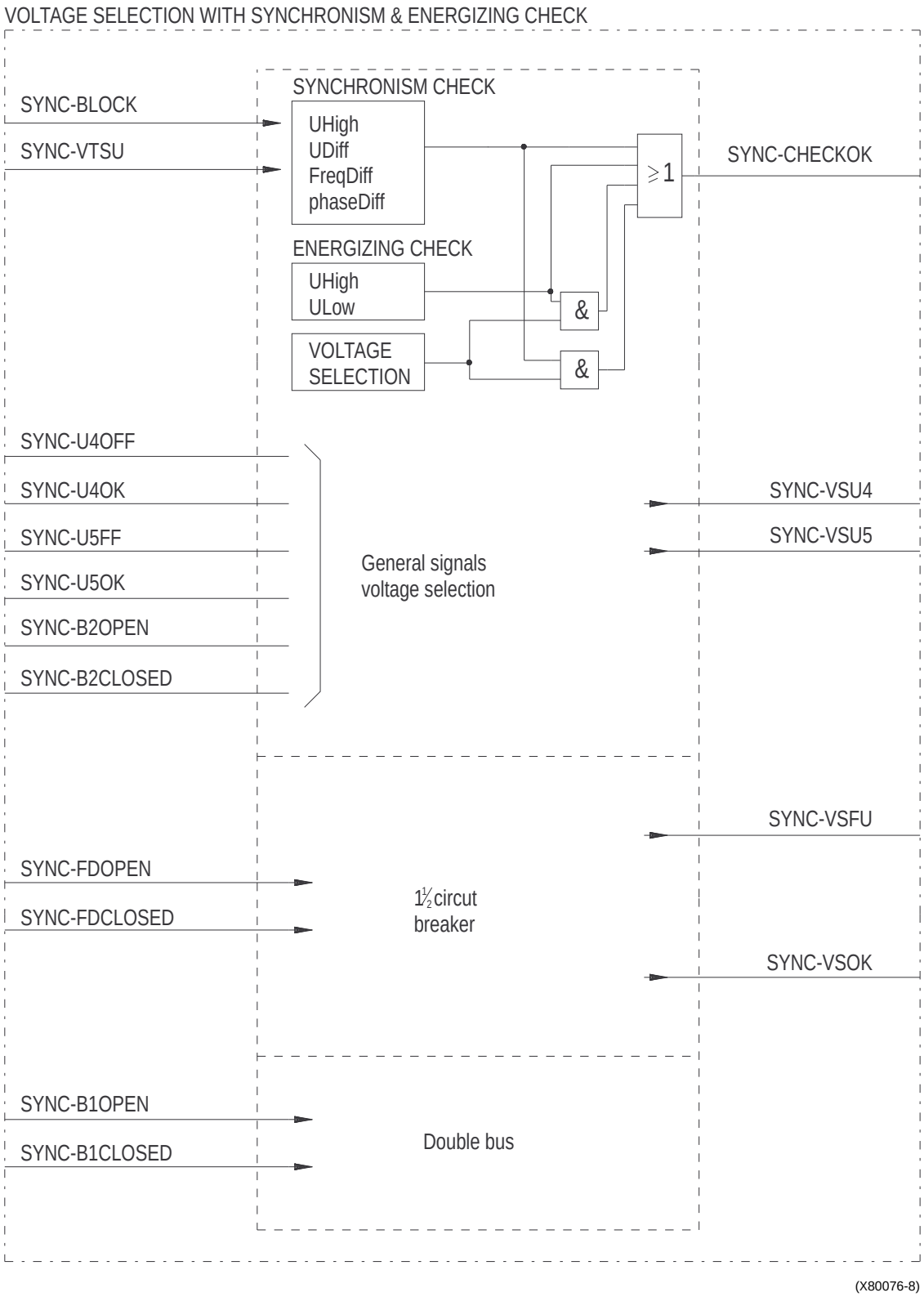

Fig. 8 Terminal diagram of the function.

1.5.2 Signal list

CONNECTIONS:	TO:	SETTING:	DESCRIPTION:
SYNC-U5FF	BI		External fuse failure input from busbar voltage bus 1. In case of fuse failure the energization check is blocked.
SYNC-U5OK	BI		No external fuse failure. Inverted signal
SYNC-U4FF	BI		External fuse failure input from busbar voltage bus 2. In case of fuse failure the energizing check is blocked.
SYNC-U4OK	BI		No external fuse failure. Inverted signal
SYNC-B1OPEN	BI		Breaker section 1 open. Connected to the auxiliary contacts of a breaker-section in an double bus or 1 1/2 circuit breaker arrangement.
SYNC-B1CLOSED	BI		Breaker section 1 closed. Connected to the auxiliary contacts of a breaker-section in an double bus or 1 1/2 circuit breaker arrangement.
SYNC-FDOPEN			Feeder disconnector open. Connected to the auxiliary contacts of the line disconnector in a 1 1/2 circuit breaker system.
SYNC-FDCLOSED			Feeder disconnect or closed. Connected to the auxiliary contacts of the line disconnector in a 1 1/2 circuit breaker system.
SYNC-B2OPEN	BI		Breaker section 2 open. Connected to the auxiliary contacts of a breaker-section in an double bus or 1 1/2 circuit breaker arrangement.
SYNC-B2CLOSED	BI		Breaker section 2 closed. Connected to the auxiliary contacts of a breaker-section in an double bus or 1 1/2 circuit breaker arrangement.
PRODUCTION	**TO:**	**SETTING:**	**DESCRIPTION:**
SYNC-VSU5	BO		Voltage selection Uref from bus 1. (U5) To inform the adjacent breaker terminal unit which voltage reference is selected.
SYNC-VSU4	BO		Voltage selection Uref from bus 2. (U4) To inform the adjacent breaker terminal unit which voltage reference is selected.
SYNC-VSFU	BO		Voltage selection Uref from the line feeder (UL) To inform the adjacent breaker terminal unit which voltage reference is selected.
SYNC-VSOK	BO		Voltage selection OK and no fuse failure. This signal is sent to the adjacent breaker terminal unit in an 1 1/2 circuit breaker arrangement.
SYNC-VTSU	BO		Internal fuse failure detection
SYNC-CHECKOK	BO		Synchro-check / Energizing check for voltage selection OK

1.5.3 Setting table

PARAMETER:	SETTING RANGE:	SETTING ACTUAL				
		Group 1	Group 2	Group 3	Group 4	DESCRIPTION:
Operation	Off / On					Function execution
Uselection	SingleBus / BrkHalf / DbleBus					Single bus / 1 1/2 breaker arrangement / Double bus