Contents *Page*

1 TRIPPING LOGIC - REB 551 2

1.1 Design 2
1.1.1 Three-phase tripping logic 2
1.1.2 Single-phase tripping logic 3
1.1.3 Single-phase tripping unit 3

1.2 Testing 5

1.3 Appendix 7
1.3.1 Terminal diagrams 7
1.3.2 Signal list 9
1.3.3 Setting table 11

1 TRIPPING LOGIC - REB 551

The tripping logic in REB 551 breaker protection terminals consists of two different parts:

- Three-phase tripping logic.
- Single-phase tripping logic. The logic will also issue three-phase tripping when phase selection within the operating protection function is not possible, or when external conditions request three-phase tripping.

Selection of the operating mode (exclusively three-phase, or single and/or three-phase) is feasible under the menu below only.

Settings
Functions
Group n
Trip

It is always possible to switch off the operation of the tripping logic and thus disable the terminal's tripping function. This way, it is possible to test the terminal without having to disconnect the tripping circuits.

1.1 Design

he appendix, attached to this description of the tripping logic, gives the following information:

- a simplified terminal diagram of the three-phase and single-phase tripping logic
- a terminal diagram of the three-phase and single-phase tripping logic
- a description of the connection and production signals of the tripping logic
- a table of the setting parameters for the single-phase tripping logic

1.1.1 Three-phase tripping logic

Fig. 1 shows a simplified block diagram of the three-phase tripping logic. The operation of the logic can be blocked by the external signal TRIP-BLOCK, connected to one of the terminal's binary inputs.

A separate impulse circuit assures that the duration of the tripping signals will not be less than 150 ms.

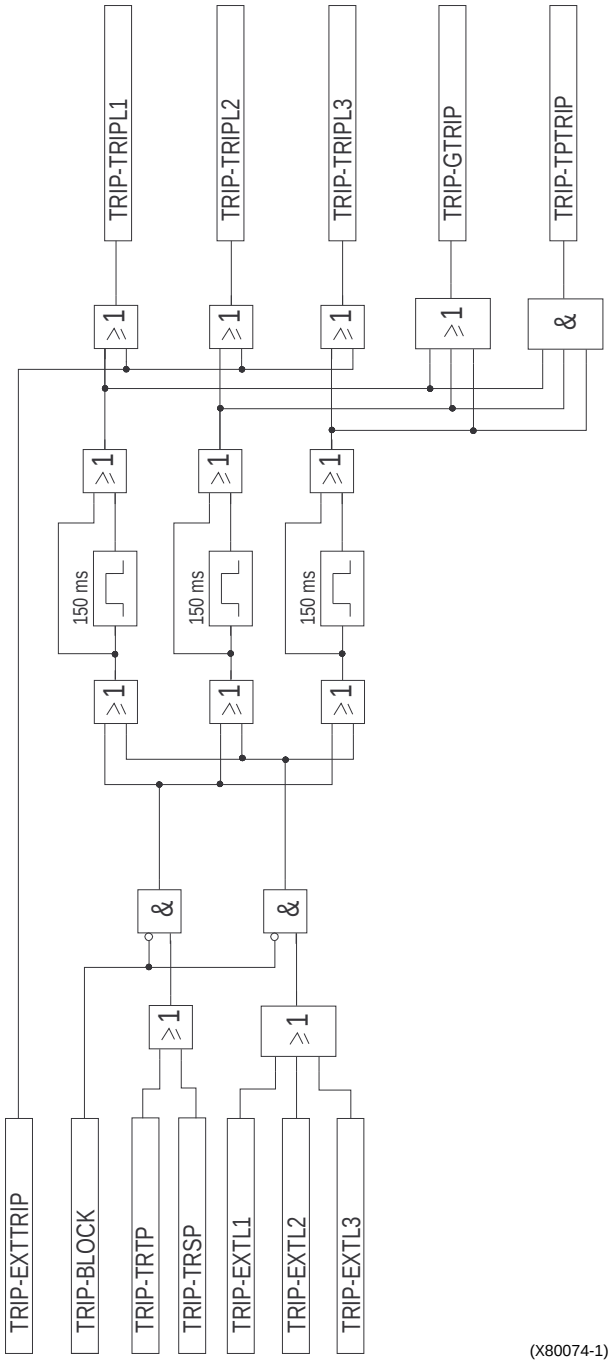

Fig. 1 Three-phase tripping logic - Simplified block diagram

Any of the external tripping signals TRIP-EXTL1, TRIP-EXTL2 or TRIP-EXTL3 can be connected to any of the binary input terminals or any of the functional output signals, that should cause a tripping action.

The external tripping signal TRIP-EXTTRIP causes an unconditional three-phase tripping, as presented in Fig. 1

1.1.2 Single-phase tripping logic

The single-phase tripping logic consists of two parts:

- a phase selection logic as shown in Fig. 2
- a single-phase tripping unit as shown in Fig. 3. Note that the output signals from Fig. 2 enter the logic in Fig. 3

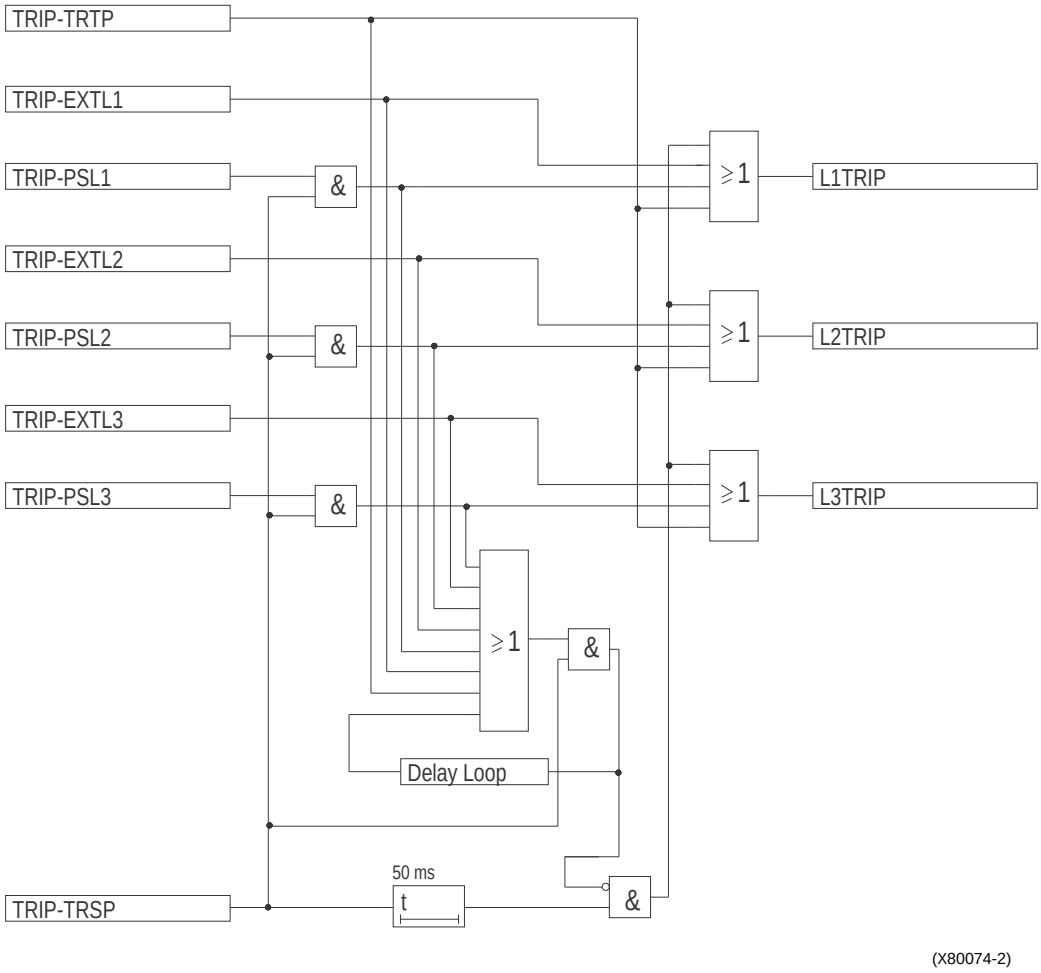

Fig. 2 Phase selection logic

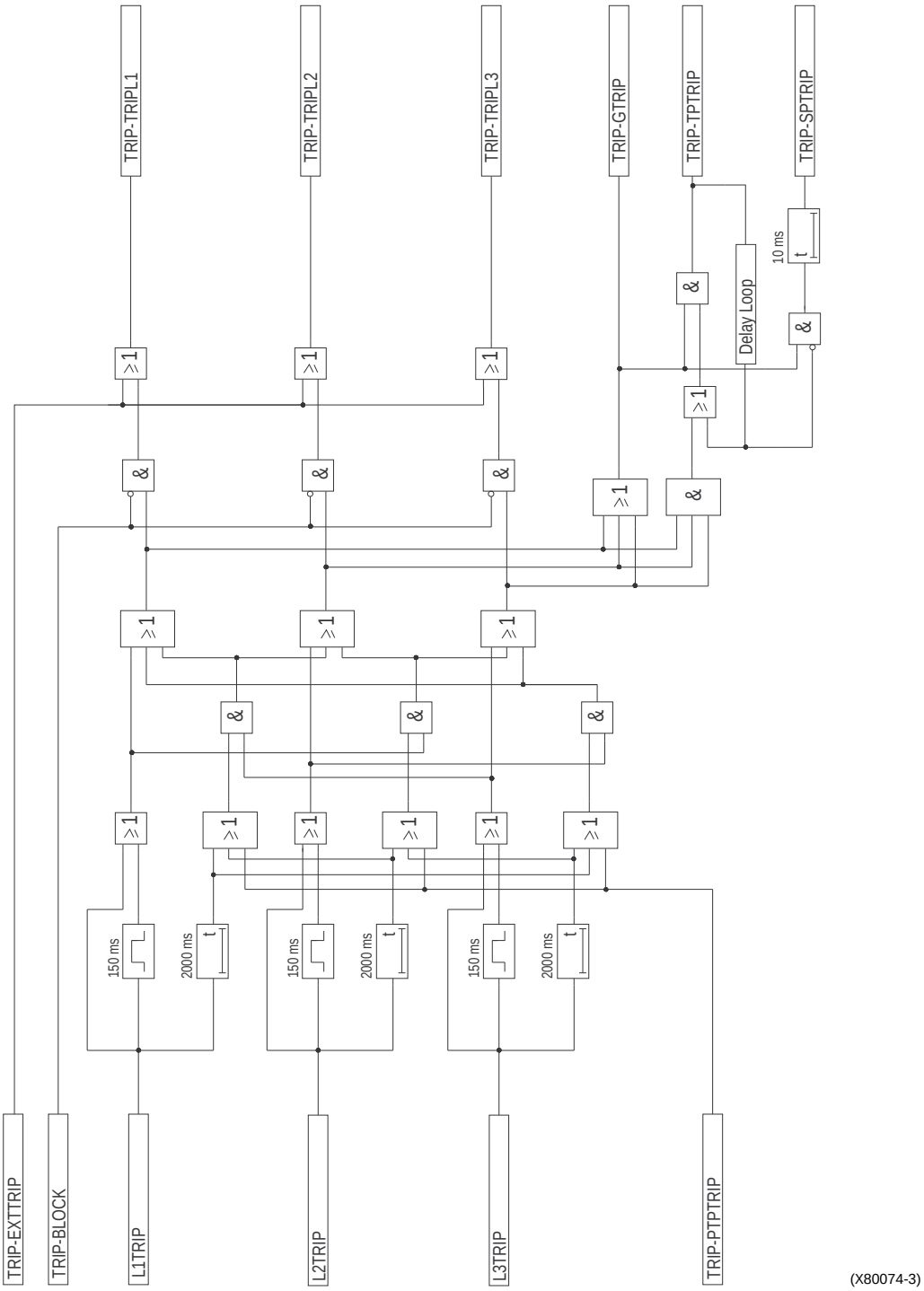

Fig. 3 Single-phase tripping unit

1.1.3 Single-phase tripping unit

TThe following functions, which will later on influence the single-phase tripping of the terminal, are entered into the phase selection logic:

- Phase selection signals from the different protection functions that can operate on a single phase basis and will be used in the terminal (TRIP-PSL1, TRIP-PSL2, TRIP-PSL3)
- External phase selective tripping signals (TRIp-EXTL1, TRIP-EXTL2. TRIP-EXTL3). The purpose of these signals is also to include external protective devices into the optionally built-in autoreclosing scheme or breaker failure protection.

For an additional control of the internal signals and the single-phase tripping scheme, there must be a signal TRIP-TRSP. If this signal continues for more than 50 ms without the presence of any other single-phase tripping signals, the possibility of three-phase tripping will be issued. The phase selection signals, as issued by the phase-selection logic, correspond to the following phases (Fig. 2 and Fig. 3)

- signal L1TRIP to phase L1
- signal L2TRIP to phase L2
- signal L3TRIP to phase L3

1.1.4 Single-phase tripping unit

The external signal TRIP-BLOCK might block the operation of the complete tripping unit. In a similar way, an external signal TRIP-EXTTRIP can cause instantaneous three-phase tripping. The presence of any of the internally created three-phase tripping signals, connected to the input signal TRIP-PTPTRIP, will cause three-phase tripping.

Timers, delayed for 2 seconds at drop-out, assure correct three-phase tripping for evolving faults.

The impulse circuits will assure that the tripping signals issued by the terminal will not be shorter than 150 ms.

1.2 Testing

In this connection it is practically impossible to provide any general instructions on the testing procedure for the testing of the tripping logic as built into the REB 551 protection and monitoring terminals. The reason is that the configuration of each terminal depends very much on the functionality defined by the customer.

ABB Network Partner AB therefore suggest a check of the correct operation of the tripping logic for the operation of different built-in protection and control functions, at the same time when testing different functions. It is also necessary to follow the correct documentation, issued separately for each terminal. With reference to this, please always refer in the documentation to the serial number of a terminal.

1.3 Appendix

1.3.1 Terminal diagramst

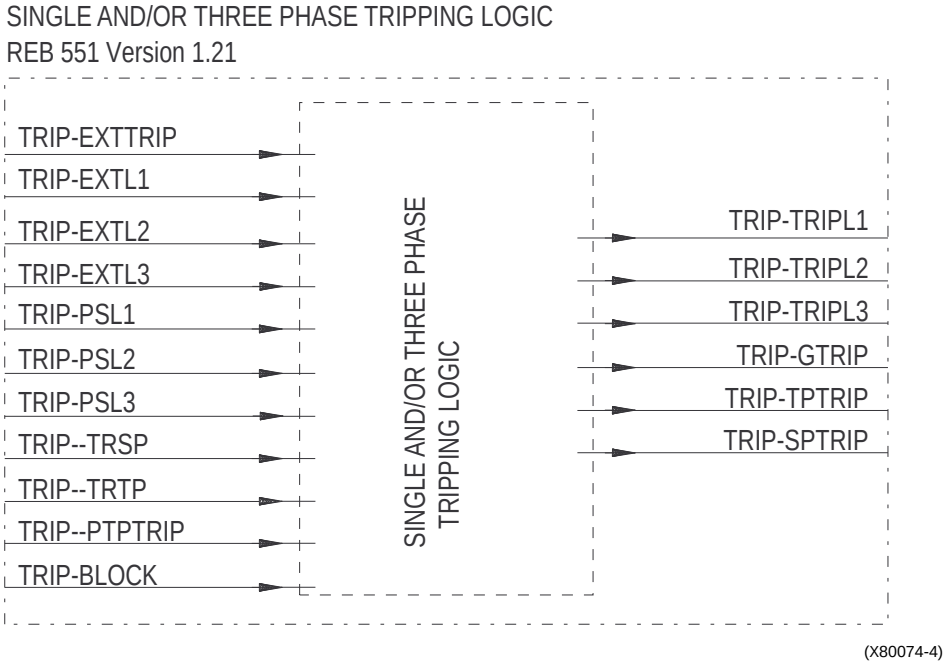

Fig. 4 Simplified terminal diagram for the function

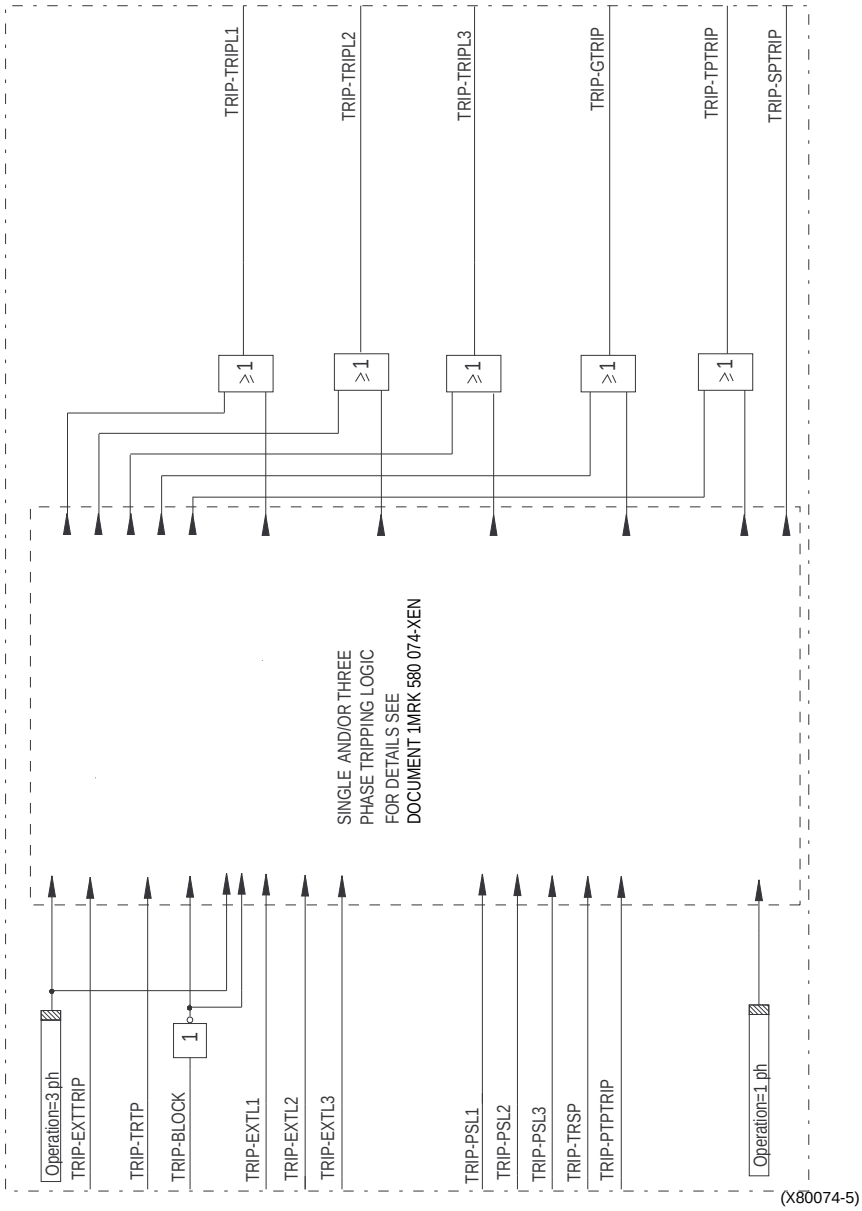

Fig. 5 Terminal diagram of the functions

1.3.2 Signal list

CONNECTIONS:	TO:	SETTING:	DESCRIPTION:
TRIP-BLOCK	BI		External signal that blocks the operation of a tripping logic
TRIP-TRTP	BI		External signal that requests a three-phase trip
TRIP-EXTTRIP	BI		External signal that causes a three-phase trip - general external trip
TRIP-TRSP	BI		External signal that requests a single-phase trip
TRIP-EXTL1	BI		External signal that causes a single-phase trip in phase L1
TRIP-EXTL2	BI		External signal that causes a single-phase trip in phase L2
TRIP-EXTL3	BI		External signal that causes a single-phase trip in phase L3
TRIP-PTPTRIP	BI		External signal that requests a three-phase trip (from an eventual auto–reclosing unit)
TRIP-PSL1			Phase selection for phase L1
TRIP-PSL2			Phase selection for phase L2
TRIP-PSL3			Phase selection for phase L3

PRODUCTION	TO:	SETTING:	DESCRIPTION:
TRIP-GTRIP	BO		General trip, caused by one of the input signals to the tripping function
TRIP-TRIPL1	BO		Trip command in phase L1
TRIP-TRIPL2	BO		Trip command in phase L2
TRIP-TRIPL3	BO		Trip command in phase L3
TRIP-TPTRIP	BO,AR1, AR1MB		Three-phase tripping command has been issued by the tripping function. Normally it is also necessary to wire it to the autoreclosing function.
Single-phase tripping			**Single-phase tripping**
TRIP-SPTRIP	BO		Single-phase tripping command has been issued by the tripping function

1.3.3 Setting table

PARAMETER:	SETTING RANGE:	SETTING				
		ACTUAL				
			Group 1	Group 2	Group 3	Group 4	DESCRIPTION:
Operation	Off 1ph 3ph						Operating mode of the tripping logic: Off: the tripping logic is switched off. No tripping signals will be issued 3ph: only three phase tripping 1ph: Single and/or three phase tripping (option)