Contents *Page*

1 FUSE FAILURE SUPERVISION FUNCTION 2

1.1 Application 2

1.2 Measuring principle 2

1.3 Design 3

1.4 Settings 4

1.5 Testing 4

1.6 Technical data 7

1.7 Appendix 7

1.7.1 Terminal diagrams 7

1.7.2 Signal list 9

1.7.3 Setting table 10

1 FUSE FAILURE SUPERVISION FUNCTION

1.1 Application

Different protection functions within the REx 5xx protection and monitoring terminals operate on the basis of the decreased measured voltage in a relay point. Examples are: distance protection function, undervoltage measuring function, voltage check for the weak infeed logic, etc.

These functions will operate unnecessarily if a short circuit occurs in the secondary circuits between the voltage instrument transformers and the terminal. This will also happen if a connection breaks.

It is possible to employ different measures to prevent such unwanted operations. Miniature circuit breakers in the voltage measuring circuits, located as close as possible to the voltage instrument transformers, are one of them. Separate “fuse failure” measuring relays or elements within the protection and monitoring devices are another possibility. It is also possible to combine these solutions to get the best possible effect.

The fuse-failure supervision function as built into the REx 5xx terminals has the following possibilities:

- It can operate only on the basis of external binary signals from the miniature circuit breaker or from the line disconnector. The first case will influence the operation of all voltage-dependent functions while the second one does not affect the impedance measuring functions.
- It can operate on the basis of the zero-sequence measuring quantities: a high value of voltage $3U_0$ without the presence of the residual current $3I_0$.
- It can operate on the basis of the negative-sequence measuring quantities: a high value of voltage $3U_2$ without the presence of the negative-sequence current $3I_2$ (this option is available only in REL 501 and REL 511).

1.2 Measuring principle

The current and voltage measuring elements within one of the built-in digital signal processors continuously measure the currents and voltages in all three phases, and calculate the zero-sequence current $3I_0$, the negative-sequence current $3I_2$, and the corresponding voltages, comparing them with the set values I> and U>. Fourier's recursive filter filters the current and voltage signals, and a separate trip counter prevents high overreaching of the measuring elements. The following signals will get their logical values equal to 1 if the measured voltage exceeds, and the measured current does not exceed the pre-set value:

- VTF0 for the zero-sequence measuring quantities
- VTF2 for the negative-sequence measuring quantities

1.3 Design

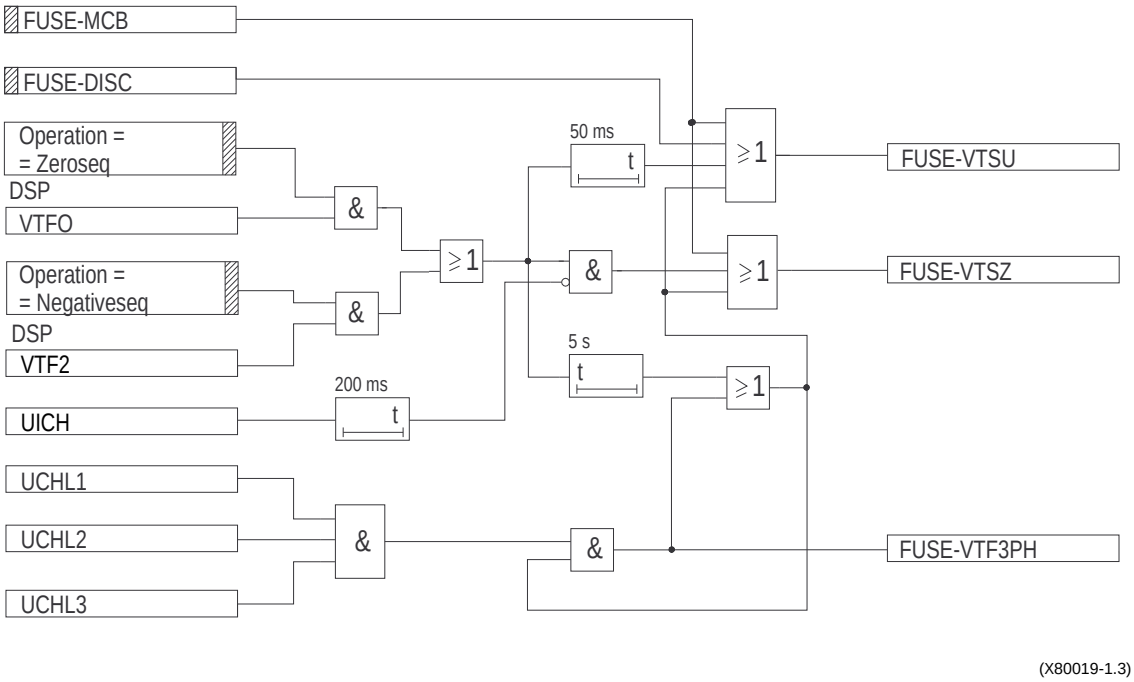

Fig. 1 Fuse failure supervision function - simplified block diagram

The external signals from the line disconnector (FUSE-DISC) and from the miniature circuit breaker (FUSE-MCB) perform their function even when the fuse failure supervision (FFS) function has been switched off. Also, they can always operate in parallel with the zero-sequence or negative-sequence measuring function.

An additional current and voltage check measuring function (with the logical output UICH) inhibits the operation of the FFS function for 200 ms after the line energisation in order to prevent its operation for unequal pole closing. The same function will also block the FFS during single-pole reclosing.

After 5 seconds, a separate three-phase voltage measuring circuit will seal-in the fuse failure condition until the normal voltage conditions are achieved.

The appendix to this description of the FFS function gives the following information:

- A simplified terminal diagram of the FFS function
- A terminal diagram of the FFS function
- A description of the connection and production signals of the FFS function
- A table of the setting parameters for the FFS function

1.4 Settings

The setting procedure for the FFS function takes place under the menu:

Settings
Functions
Group n
Fuse Failure

We recommend the use of a negative-sequence mode of operation in the terminals used in isolated or high impedance earthed networks.

Some values of the zero-sequence or negative-sequence voltages and currents will always exist due to different unsymmetries in the primary system and differences in the current and voltage instrument transformers. The minimum value for the operation of the current and voltage measuring elements must always be set with a safety margin of 10 to 15%, depending on the system operating conditions.

It is necessary to pay special attention to the unsymmetry of the measuring quantities when the function is used on longer untransposed lines, on multicircuit lines, etc.

1.5 Testing

It is necessary to check the operation of the FFS function during the commissioning, as well as during regular maintenance tests. ABB Relays recommends, although it does not absolutely request, the use of a testing equipment of type RTS 21 (FREJA) for purposes of the secondary injection testing.

The test equipment used should be able to provide an independent three-phase supply of voltages and currents to the tested terminal. Furthermore, it must be possible to change the values of voltages, currents and phase angles between the measuring quantities, independent of each other, for each phase separately. The test voltages and currents should have a common source, with a very small content of higher harmonics. If the test equipment can not indicate the phase angles between the measured quantities, a separate phase angle meter will be needed.

The corresponding binary signals that inform the user about the operation of the FFS function are available on the local man machine interface (MMI) unit under the menu:

Service Report
Logical Signals
FuseFailure

The corresponding signals that give information on the operation of the FFS function are described in the appendix, attached to this document.

The following steps are necessary for testing the FFS function:

1.1 Check if the input and output logical signals as shown in Fig. 1 are configured to the corresponding binary inputs and outputs of the tested terminal. If not, configure them for testing purposes.

1.2 Set off the operation of the FFS function.

1.3 Connect the three-phase testing equipment to the tested terminal, and simulate normal operating conditions with the three-phase currents in phase with the corresponding phase voltages and equal to their rated values.

1.4 Disconnect one of the phase voltages instantaneously and observe the operation of the voltage-dependent built-in functions, such as distance protection, undervoltage protection, etc. They must operate for the simulated system condition. Simulate normal operating conditions again.

1.5 Connect the nominal dc voltage to the FUSE-DISC binary input, and check that the signal FUSE-VTSU appears without any time delay. Disconnect one of the phase voltages. No signals FUSE-VTSZ and FUSE-VTF3PH should appear on the terminal. Only the distance protection function will operate. No other voltage-dependent functions must operate. Simulate normal operating conditions again. Disconnect the dc voltage from the FUSE-DISC binary input terminal.

1.6 Connect the nominal dc voltage to the FUSE-MCB binary input and check that the FUSE-VTSU and FUSE-VTSZ signals appear without any time delay. Disconnect one of the phase voltages. No voltage-dependent functions must operate. Simulate normal operating condition again. Disconnect the dc voltage from the FUSE-MCB binary input terminal.

1.7 Set the operating mode of the FFS function to the Zeroseq. Disconnect one of the phase voltages and observe the logical output signals. Signals FUSE-VTSU and FUSE-VTSZ should appear instantaneously. Signal FUSE-VTF3PH should appear after a time delay of 5 seconds.

1.8 Disconnect immediately the remaining two phase voltages and all three currents. There should be no change in the statuses of all three output signals.

1.9 Establish instantaneously normal operating conditions and observe the logical output signals. They should change to the logical 0 as follows:

- signal FUSE-VTF3PH after about 25 ms
- signal FUSE-VTSU after about 50 ms
- signal FUSE-VTSZ after about 200 ms

1.10 Slowly decrease the measured voltage in one phase until the signal FUSE-VTSU appears. Record the measured voltage and calculate the corresponding zero-sequence voltage according to the equation (observe that the voltages in the equation are phasors)

$$3 \cdot U_0 = U_{L1} + U_{L2} + U_{L3}$$

where:

U_{L1}, U_{L2} and U_{L3} are the measured phase voltages.

Compare the result with the set value of the zero-sequence operating voltage.

1.11 Slowly decrease one of the measured currents until signal FUSE-VTSU gets a logical value of zero. Record the measured current and calculate the corresponding zero-sequence current according to the equation (observe that the currents in the equation are phasors):

$$3 \cdot I_0 = I_{L1} + I_{L2} + I_{L3}$$

where:

I_{L1}, I_{L2} and I_{L3} are the measured currents in corresponding phases.

Compare the result with the set value of the zero-sequence operating current.

1.12 Establish normal operating conditions. Set the operating mode of the FFS function at the Negativeseq. Repeat the same procedure as under the Zeroseq mode with the difference that the measured and set quantities are the negative-sequence voltages and currents. The corresponding equations are as follows:

$$3 \cdot U_2 = U_{L1} + a^2 \cdot U_{L2} + a \cdot U_{L3}$$

$$3 \cdot I_2 = I_{L1} + a^2 \cdot I_{L2} + a \cdot I_{L3}$$

where $a = 1 \cdot e^{j\frac{2 \cdot \pi}{3}} = -0,5 + j\frac{\sqrt{3}}{2}$

1.13 Disconnect the testing equipment. Don't forget to configure the terminal, if necessary, to its normal operating configuration.

1.6 Technical data

1.7 Appendix

Table 1:

Function	Setting range
Fuse failure supervision - zero seq. operating voltage $3U_0$ operating current $3I_0$	 (10 - 50)% of $U_r / \sqrt{3}$ (10 - 50)% of I_r
Fuse failure supervision - negative seq. operating voltage $3U_2$ operating current $3I_2$	 (10 - 50)% of $U_r / \sqrt{3}$ (10 - 50)% of I_r

1.7.1 Terminal diagrams

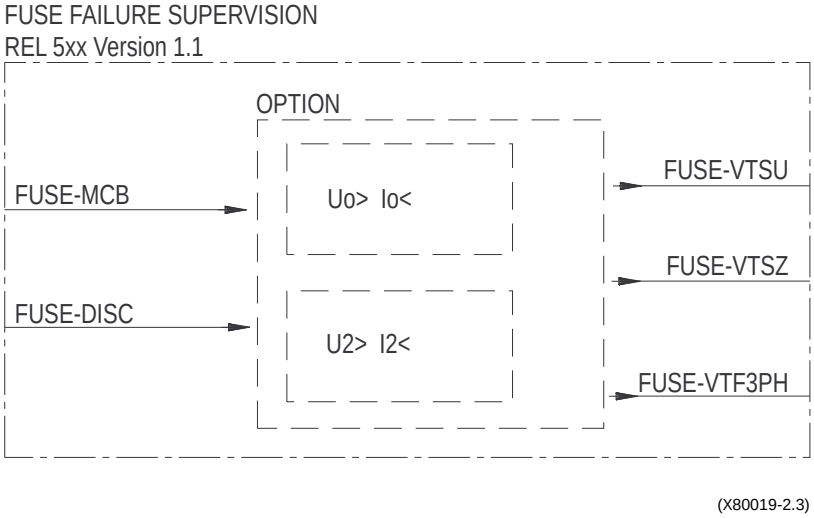

Fig. 2 Simplified terminal diagram of the function.

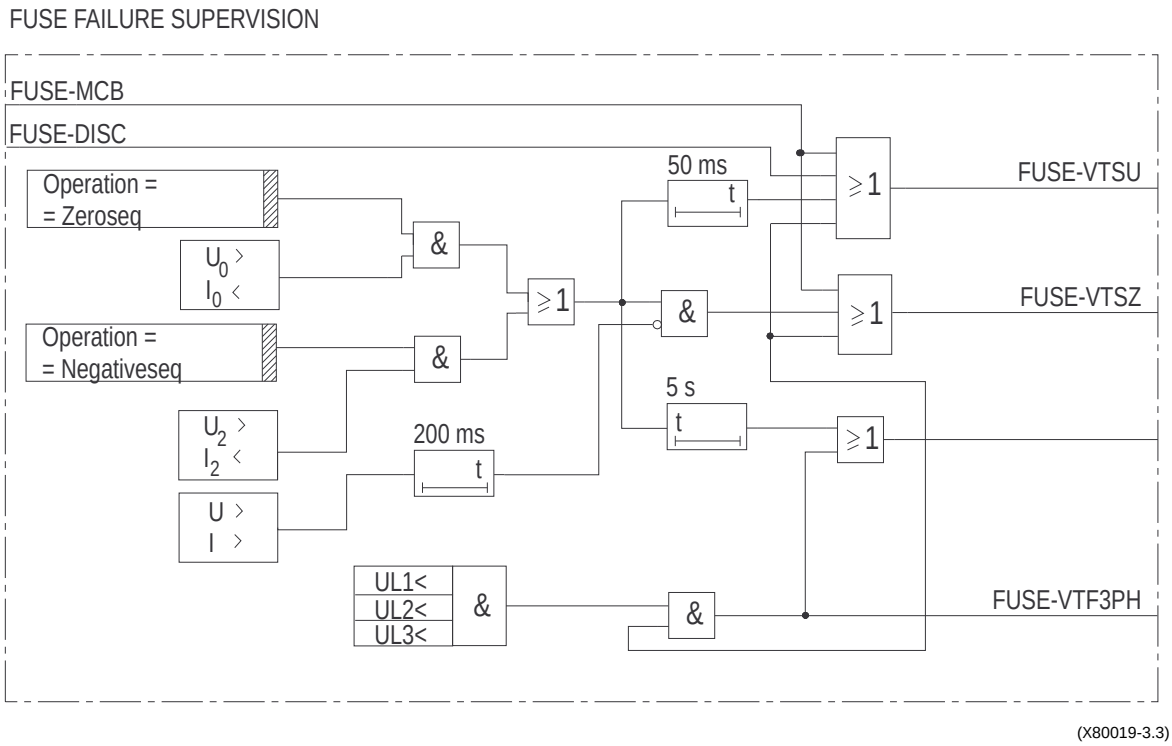

Fig. 3 Terminal diagram of the function.

1.7.2 Signal list

CONNECTIONS:	TO:	SETTING:	DESCRIPTION:
FUSE-MCB	BI		Binary input signal from the miniature circuit breaker (NC contact) in the voltage measuring circuits
FUSE-DISC	BI		Binary input signal from the auxiliary contacts (NC contacts) of the line disconnector
PRODUCTION	**TO:**	**SETTING:**	**DESCRIPTION:**
FUSE-VTSU	BO, WEIZ, SYNC, UUVT, SSU-PLV, SEFZ		Information on the operation of a FFS function - blocks operation of the voltage dependent functions (not distance). Signal should normaly be connected to the corresponding imput terminals of voltage dependent measuring functions.
FUSE-VTSZ	BO, DIST, ITOC		Information on the operation of a FFS function - blocks operation of the distance protection function and permits the operation of a time delayed O/C protection as a back-up function. Signal should normaly be configured to the corresponding inputs IMP--VTSZ and ITOC-VTSZ, when the functions included in the terminal.
FUSE-VTF3PH	BO		Information on the operation of a fuse failure supervision function - delayed for 5 seconds

1.7.3 Setting table

PARAMETER:	SETTING RANGE:	SETTING ACTUAL				
		Group 1	Group 2	Group 3	Group 4	DESCRIPTION:
Operation	Off Zeroseq Negativeseq					Operating mode of the fuse failure supervision function. It can be switched Off, or it can operate on the basis of the zero or negative sequence quantities
U>	(10 - 50)% of U_r					The operating level of the voltage measuring element for the zero or negative sequence voltage, set as a percentage of the terminal rated voltage
I>	(10 - 50)% of I_r					The operating level of the current measuring element for the zero or negative sequence current, set as a percentage of the terminal rated current