Contents *Page*

1 REMOTE COMMUNICATION 2
1.1 Application 2
1.2 Theory of operation 3
1.3 Design 4
1.4 Setting 5
1.5 Technical data 5
1.6 Appendix 6
1.6.1 Setting table 6

1 REMOTE COMMUNICATION

1.1 Application

The remote communication can be used for different purposes, but all of them emerge into getting a better access to the information stored in the protection terminals.

The remote communication can be used with a Station Monitoring System (SMS), a Substation Control System (SCS) or a SCADA system, and the same type of communication is used, no matter if the user is placed in the station (locally) or at another station, at a dispatch centre or in an office (remotely). The same type of communication is also applied when using the front communication port, but for this purpose, no special “Remote communication” option is required. Only the software in the personal computer (PC).

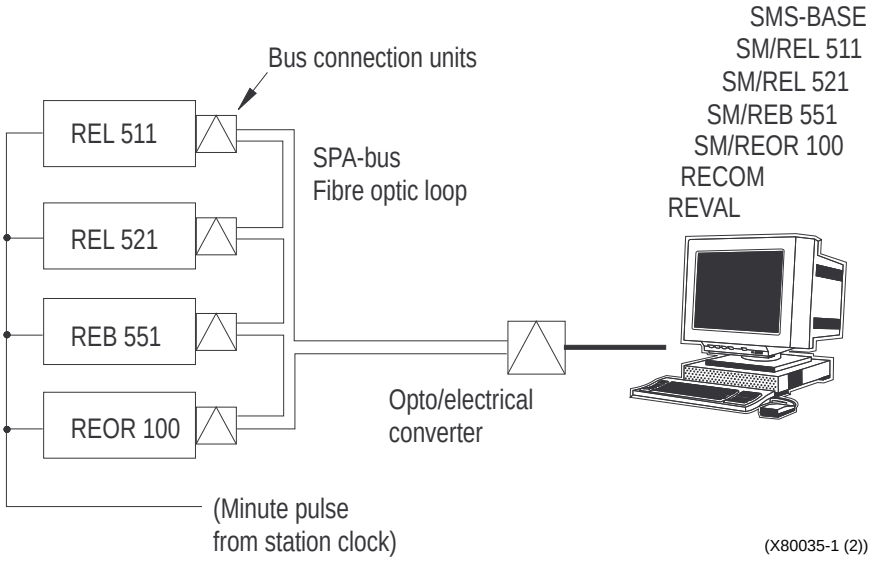

Fig. 1 Example of local communication structure for a Station Monitoring System

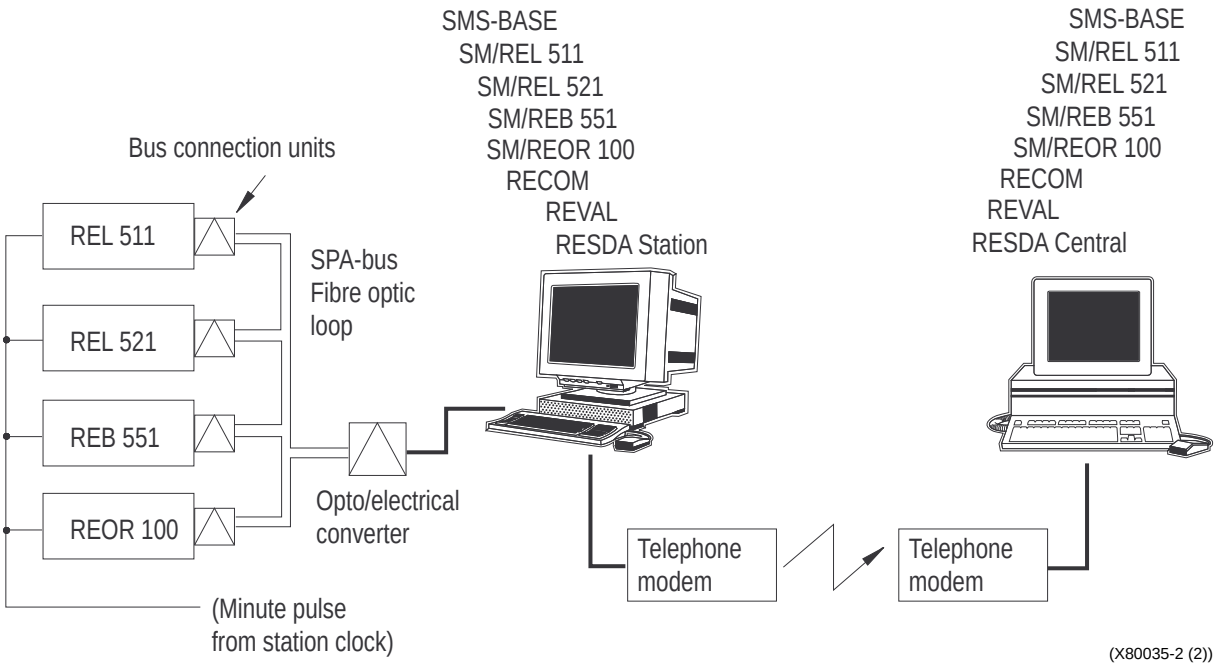

Fig. 2 Example of remote communication structure for a Station Monitoring System

1.2 Theory of operation

All remote communication to and from the protection terminal (including the front PC port communication) uses the protocol SPA-bus V 2.4. This is an ASCII-based protocol for serial communication. The communication is based on a master-slave principle, where the protection terminal is a slave, and the PC or the control room computer is the master. Only one master can communicate on each fibre optic loop. This protection terminal has two communication ports, which implies that it can communicate with both a PC and a station computer (or two PCs) on the different ports as long as they use different loops.

A program is needed in the master computer for interpretation of the SPA-bus codes, and for translation of the settings sent to the protection terminal. This program is called SMS-BASE with the appropriate SM/REx 5xx-modules.

1.3 Design

The remote communication use optical fibres for transfer of data within a station. For this purpose, a fibre optic bus connector (SPA-ZC 21) is applied on the rear of the protection terminal - one for each channel used. The principle of two independent communication ports is used, where the two ports have individual identity numbers (slave number), individual communication speed and an individual right to change the data in the protection terminal. Even the event mask for SCS-Events is individual for each port.

Also the option “Remote communication” is required in the protection terminal that is to communicate on a rear channel.

Either of the channels can be used for SCS or SMS. Channel A is continuously connected, while Channel B will be disconnected during the time when the PC connection on the front is activated.

When communicating locally with a PC in the station the only hardware needed for a Station Monitoring System is:

- bus connectors
- optical fibres
- opto/electrical converter
- PC

When communicating remotely with a PC, the same hardware is needed with the only addition of telephone modems.

The software needed in the PC, either local or remote, is:

- SMS-BASE
- SM/REx 5xx for the protection in question
- RECOM if disturbance recorder data is to be transferred to a PC
- REVAL for evaluation of this disturbance recorder data

When communicating to a front connected PC, the only hardware required is the special front connection cable. The software needed in a front connected PC is:

- SMS-BASE
- SM/REx 5xx for the protection in question. The SM/REx 5xx includes one small part of RECOM which makes it possible to collect disturbance recorder data via the front port.

If the same PC is used for evaluation of the disturbance recorder data, REVAL is also required.

1.4 Setting

The most important settings in the protection terminal when it comes to communication, are the slave number and baud rate (communication speed). These settings are absolutely essential for all communication contact to the protection terminal.

These settings can **only** be done on the built-in man machine interface (MMI) for rear channel communication at:

Configuration
SPAComm
Channel A or Channel B

and for front connection at:

Configuration
SPAComm
Front

The slave number can be set to any value from 1 to 899, as long as the slave number is unique within the used SPA-loop.

The baud rate, i.e. the communication speed, can be set to 300, 1200, 2400, 4800 or 9600 bit/s. The baud rate is recommended to be the same for the whole station, although different baud rates in a loop is possible. If different baud rates in the same fibre optical loop are used, this has to be taken into account when making the communication setup in the communication master, i.e. the PC.

For local communication, 9600 is the normal setting. If telephone communication is used, the communication speed will depend on the quality of the connection and of the type of modem used. One have to have in mind however, that the protection terminal does not adapt its speed to the actual communication conditions, since the speed is set on the MMI of the terminal.

1.5 Technical data

Table 1:

Function	Value
Protocol	SPA
Communication speed	300,1200, 2400, 4800 or 9600 bit/s
Slave number	1 to 899
Remote change of active group allowed	yes/no
Remote changed of settings allowed	yes/no
Connectors and optical fibres	glass or plastic

1.6 Appendix

1.6.1 Setting table

PARAMETER:	SETTING RANGE:	SETTING	DESCRIPTION:
		ACTUAL	
Channel A			
SlaveNo	1 - 899		SPA-bus identification number
BaudRate	300 / 1200 / 2400 / 4800 / 9600 bit/s		Communication speed
ActGrpRestrict	Open / Blocked		Open = Access right to change between active groups
SettingRestrict	Open / Blocked		Open = Access right to change any parameter
Channel B			
SlaveNo	1 - 899		SPA-bus identification number
BaudRate	300 / 1200 / 2400 / 4800 / 9600 bit/s		Communication speed
ActGrpRestrict	Open / Blocked		Open = Access right to change between active groups
SettingRestrict	Open / Blocked		Open = Access right to change any parameter
Front			
SlaveNo	1 - 899		SPA-bus identification number
BaudRate	300 / 1200 / 2400 / 4800 / 9600 bit/s		Communication speed