Contents *Page*

1 INTRODUCTION - REB 551 2

1.1 Application **2**
1.1.1 Breaker related functions 2

1.2 Basic functions **6**
1.2.1 Breaker failure protection 6
1.2.2 Synchronism and energizing check 6
1.2.3 Pole discordance protection 7
1.2.4 System supervision overload 7
1.2.5 Fuse failure supervision 7
1.2.6 CT Supervision 7
1.2.7 Tripping logic 7
1.2.8 Presentation of phase values 7
1.2.9 Event recorder 8
1.2.10 Configuration logic 8

1.3 Optional functions **8**
1.3.1 Single- and/or three-phase autoreclosing 8
1.3.2 Voltage selection 8
1.3.3 On-line control function 9
1.3.4 Automatic simulation logic 9
1.3.5 Loss of power voltage supervision 9
1.3.6 Disturbance recorder 9
1.3.7 Remote serial communication 10
1.3.8 Input/output facilities 10
1.3.9 Trip relay units 11

1 INTRODUCTION - REB 551

REB 551 provides breaker related functions associated with the protection functions. The following functions are available in the REB 551 breaker terminal:

Basic functions

- Breaker failure protection
- Synchronism and energizing check
- Pole discordance protection
- System supervision overload
- Fuse failure supervision
- Single or three-phase tripping mode
- Presentation of phase values
- Event recorder
- Configuration logic circuits
- One input/output board

Optional functions

- Autoreclosing
- Voltage selection
- Loss of power system voltage
- Disturbance recorder
- On-line control functions
- Automatic simulation logic
- Remote serial communication
- Input / output facilities
- Trip relay units
- Test switch

1.1 Application

1.1.1 Breaker related functions

Some of these functions can alternatively be included in a line protection terminal such as the REL 5xx-series, but in some cases it can be an advantage to have them included a breaker- related terminal.

The REB 551 breaker terminal will decrease the engineering time and installation cost compared with conventional separate function units. When using separate units a lot of connections between the units must be designed and wired. The main part of this wiring is already made by the logic and configuration in the breaker terminal unit. Extra logic functions can be added by using the built-in configuration logic. These allow the user to configure the breaker terminal according to his needs, by using different logic gates and timers. For example bay interlocking conditions can be realised in this way. In this way special logic condition can be added in the station design, without any extra hard-wired connections in the panel.

The above mentioned advantages will save time and engineering cost in the following application cases:

- Retrofit installations
- Single and double busbar arrangement
- 1 1/2-breaker arrangements
- Double breaker arrangements
- Ring bus arrangements

Retrofit installations

For a retrofit installation in a substation where the existing line or transformer protections are used the REB 551 breaker unit can be connected together with the existing protections.

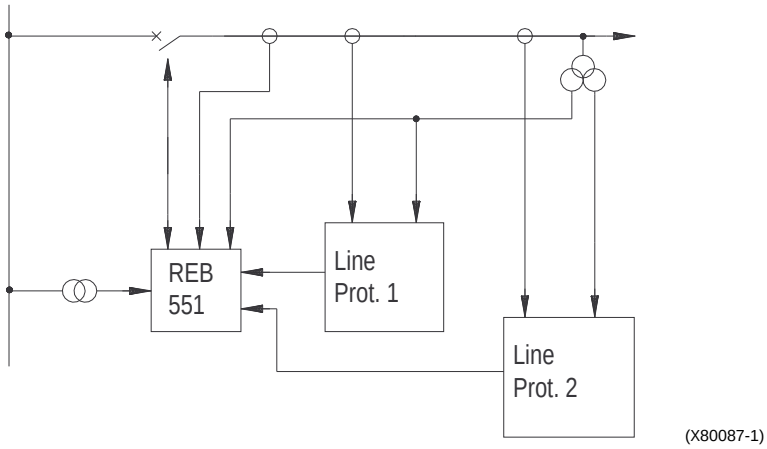

Fig. 1 Retrofit installation with duplicate line protections.

By using a REB 551 unit in the existing relay scheme, several functions can be added to the protective system without a lot of engineering and rewiring work. The synchro-check and energizing check together with voltage selection can be used for closing conditions of the circuit breaker together with the autorecloser. Interlocking conditions can be added in the configuration by using the programmable logic blocks of and, or gates and timers. Also the measuring values that normally are shown on separate instruments will be available on the local man machine interface (MMI). The actual values of the primary and secondary voltages and currents as well as the active and reactive power can be red the local MMI. The disturbance recorder function can be used in order to improve the substation monitoring system, and enables evaluation of different disturbances. Collection of disturbance records is possible locally by means of a PC or remotely by using the Station Monitoring System (SMS) system. Disturbance evaluation programs can be used in order to utilise the evaluation. The event recorder function will collect the trip and alarm signals from the circuit breaker and can also pick up signals from the existing relays. Remote serial communication will enable the REB 551 to be a part of the SMS / Substation Control System (SCS) system.

In a substation where the existing line protection relays are used the following breaker related functions can be added:

- Breaker failure protection
- Synchronism and energizing check
- Pole discordance protection
- Breaker overcurrent monitor
- Fuse failure supervision
- Event recorder for breaker signals
- Autoreclosing
- Disturbance recorder
- Remote serial communication to enable REB 551 to be a part of the SMS/SCS system
- ON-line control function

1 1/2-circuit breaker arrangement

In 1 1/2-breaker, double breaker and ringbus arrangements there are two breakers assigned to be tripped in one end of a line, or at one side of a transformer. In this case, it can be an advantage to arrange the breaker-related functions in a breaker-related terminal unit.

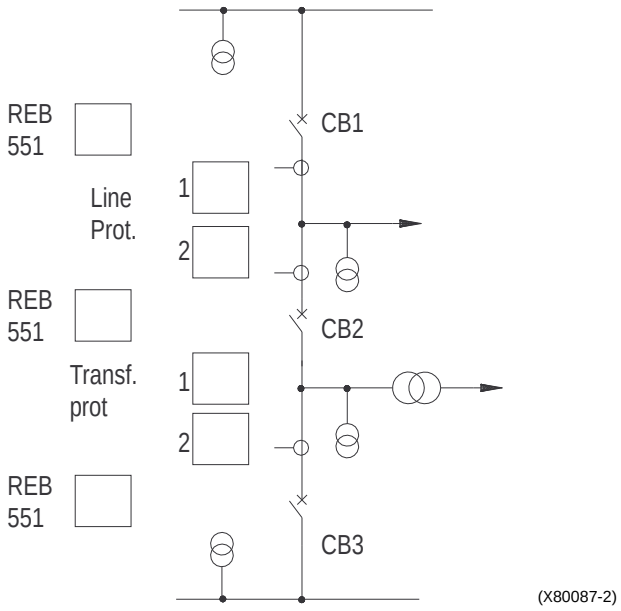

Fig. 2 REB 551 breaker terminal used in one diameter of a 1 1/2-breaker arrangement.

An example of one diameter in a 1 1/2-breaker arrangement is shown in Fig. 2. One REB 551 terminal unit for each circuit breaker in the diameter is used. One REB 551 breaker terminal unit is used for each circuit breaker in the diameter.The line protection and transformer protection can also be duplicated in this arrangement. Normally, there is also one trip relay unit for each circuit breaker. By using the breaker terminal unit in this application, with the breaker related functions, a lot of wiring can be saved compared with conventional separate units.

1 1/2 Breaker arrangement

Breaker failure protection
The breaker failure protection can be started from any of the internal functions in the REB 551 terminal or it can be started externally from the line protections.

Two timers are available, one independent of the other: timer T1 for a repeated tripping of its own circuit breaker, and timer T2, which operates the corresponding output relays connected into the breaker failure tripping logic as built up for the whole substation.

Autoreclosing
Provision is included for co-operation between the REB 551 units, and to achieve sequential reclosing of the two circuit breakers that are used. One unit is defined as “Master” and it recloses first. Should this be successful, and no trip takes place, the second unit is released to complete the reclosing sequence. Some wiring between the units must be arranged, to send signals and release the autorecloser with low priority.

Voltage selection
The voltage selection function is designed for a 1/2-circuit breaker. The selection is made on the MMI. By checking the position of the disconnectors and circuit breakers in the diameter, the right busbar and line voltage can be selected to the REB 551 units.

This function co-operates together with the synchro-check and energizing check function, which must have certain conditions regarding the voltage, the phase angle and the frequency fulfilled before the circuit breaker is allowed to be closed.

Trip units
The standard single-phase / three-phase trip units are wired in such a way to utilise for the design of, for example, a 1 1/2-circuit breaker arrangement. Contacts are available for single-phase or three-phase trip of the circuit breaker, start of the breaker failure protection or the autorecloser. The trip units are also available together with lock-out relay function and trip coil supervision relays.

Man machine communication

Four independent groups of setting parameters are available within the REB 551. The user can change an active group as well as different parameters within any of them locally by the aid of a user-friendly man machine communication (MMC) unit, or by means of a personal computer (PC). It is also possible to change an active setting group by activating two binary inputs.

The MMI serves as an information unit, presenting in a logical order the starting and tripping signals that have appeared during each of the last ten recorded disturbances.

Furthermore, each of the local MMC possibilities takes over the functionality of the measuring instruments such as the A-meter, V-meter, VAr-meter, W-meter and Hz-meter. The actual statues of all binary input signals and internal logical signals are available too. Different protection, control and monitoring functions are quite independent, as far as their configuration within the terminal is concerned. The user can not enter and change the basic algorithms for different functions, since they are located in the digital signal processors and extensively tested.

Different configurations of functions and connections are possible to change in order, to meet the requirements for different applications. Some additional logic circuits and timers are built into the REB 551 breaker terminal as well.

1.2 Basic functions

1.2.1 Breaker failure protection

The breaker failure protection in the REB 551 operates on the basis of the phase currents flowing through a corresponding line circuit breaker.

Two timers are available, one independent of the other: timer T1 for a repeated tripping of its own circuit breaker, and timer T2, which operates the corresponding output relays connected into the breaker failure tripping logic as built up for the whole substation.

Any of the internal tripping functions will start the operation of the breaker failure protection. It is also possible to program the corresponding binary inputs for the purpose of starting the breaker failure protection.

1.2.2 Synchronism and energizing check

The synchro-check function is used for controlled interconnection of a line in an interconnected network. When used, the function gives an enable signal at set satisfactory conditions. The syncrocheck function measures the difference between the voltage U1-U5, with respect to the voltage (UDiff), phase angle (PhaseDiff), and frequency (FreqDiff). It operates and permits closing of the circuit breaker when the set conditions are met.

The function can be used together with the autoreclosing function as a condition to be fulfilled before the breaker is closed.

1.2.3 Pole discordance protection

This function applies to circuit breakers with individual operation gears per pole. A discordance caused by one pole failing to close or to open can be tolerated only for a limited time, for instance as a single-phase open time in connection with single-phase reclosing. The function is based on checking the positions of the breaker auxiliary contacts. In addition, there is also a parallel detection criterion based on current comparison in the breaker poles.

1.2.4 System supervision overload

In a 1 1/2-breaker switchgear arrangement, there could be a risk of a too high load current through a certain breaker section at an unfavourable combination of breaker positions. In REB 551 the current through the breaker is measured. It can be used to initiate an annunciator or an alarm.

1.2.5 Fuse failure supervision

The operation of the built-in fuse failure supervision function is based on the detection of a zero-sequence voltage without the presence of a zero sequence current. The selection of operation, based on the presence of a negative sequence voltage, without the negative sequence current is possible by means of settings. Its effect on the operation of the REB 551 is programmable in two ways: either by blocking the energizing function or the loss of voltage protection, or by giving information on the fuse failure only.

1.2.6 CT Supervision

The CT-supervision function is based on comparison between the zero sequence current calculated from the phase currents and a reference current. The reference current is taken from the zero sequence current from another core. This core can either be of measuring transformer type or a relay transformer type. The CT-supervision function provides an alarm signal as an output.

1.2.7 Tripping logic

Single-phase tripping of the circuit breaker, for single-phase tripping conditions is possible by selecting the single-phase mode on the MMI unit.

1.2.8 Presentation of phase values

Provides information on the actual primary and secondary phases of the voltages and currents as they enter the terminal. The values of reactive power (VAr), active power (W) and frequency (Hz) can also be read on the MMI.

The actual statues of all binary input signals and internal logical signals are also available on MMI.

1.2.9 Event recorder

Up to 150 time-tagged events, for each of the last ten recorded disturbances, are available via the PC connection on the front, SMS or SCS. Time synchronisation is possible by means of the minute pulses wired to a separate binary input, as well as via the optionally built-in communication ports for remote communication.

1.2.10 Configuration logic

Configuration logic circuits are built into the REB 551 terminal, and are thus available to the user. The configuration logic consists of logic OR gates, AND-gates and TON timers. The OR and AND gates also have inverted inputs. The timer function is settable between 0 and 50,0 s, and delayed at pick-up. When the conditions should be used they to configure then to binary inputs and outputs. (I/O board)

1.3 Optional functions

1.3.1 Single- and/or three-phase autoreclosing

The autoreclosing function for single-phase and/or three-phase autoreclosing includes the following eight reclosing programs:

- Three-phase reclosing, 1 shot
- Three-phase reclosing, 2 shots
- Three-phase reclosing, 3 shots
- Three-phase reclosing, 4 shots
- Single-phase reclosing. 1 shot
- Single-phase or three-phase reclosing, 1 shot
- Single-phase followed by three-phase reclosing, or just one three-phase reclosing depending fault.
- Single-phase or three-phase reclosing, followed by three-phase reclosing, two shot.

Provision is included for co-operation between REB 551 units, in order to achieve sequential reclosing when more than one circuit breaker is used. Dead times for the single-phase and three-phase autoreclosing are settable, independent of each other, in a wide range. The same is also valid for the reclaim time and duration of a breaker closing impulse. Extensive information on the operation of a reclosing function is available to the user at any time.

1.3.2 Voltage selection

The voltage selection function is used together with the synchronism-check (SYNC) and energizing check function. When the REB 551 is used in a double-bus or 1 1/2-breaker arrangement, the voltage which should be selected is depending on the positions of the breakers and disconnectors. From the auxiliary contacts of the breakers and disconnectors, the REB 551 can select the right voltage for the SYNC and energizing function. One BI/BO card is used for this purpose.

1.3.3 On-line control function

The built in control function block enables on-line remote control of up to ten binary signals. Thus the on-line control of isolators, circuit breakers as well as different built in functions can be carried out remotely via the SCS and/or SMS.

1.3.4 Automatic simulation logic

The automatic simulation logic enables the user to program the appearance and time sequence of different internal logical signals and in this way test the operation of different built-in disturbance reporting functions, event handling within SMS and SCS, and exercise the signal flow within the substations.

1.3.5 Loss of power voltage supervision

This function will provide a delayed three-phase trip in case of loss-of-power system voltage in all three phases. The trip and/or alarm is issued when all three voltage phases have been low for more than 7 seconds. It can be used as a preparative step for power system restoration.

1.3.6 Disturbance recorder

The disturbance recording function is an important part of a substation monitoring system, which enables the evaluation of different events within the power system.

The optional disturbance recorder with a high performance is one of the building blocks within REB 551. It can memorise up to 10 analogue and 48 binary signals (input binary signals or internal signals) that are available within the terminal. The minimum recording time is 10 seconds.

All the recorded analogue and binary signals is programmable to start a recording. Furthermore, analogue signals are programmable for over functions and under functions, and binary signals can start recording with a transition from a logical 0 to a logical 1 and vice versa.

The time base is synchronised with an internal clock, and via the synchronising facilities further on to the system. Pre-fault time, post-fault time and limit time are settable in wide ranges.

Disturbance records can be collected locally by means of a PC used for local man machine communication, as well as remotely within the SMS. The disturbance evaluating PC-based program type REVAL, operating in MS Windows, is also available.

1.3.7 Remote serial communication

Optionally, one or two serial communication ports are available together with REB 551´s corresponding software. They are installed independent of each other on the back plane of the terminal. Remote communication with REB 551 uses the optical fibres to eliminate the influence of the electromagnetic interferences. This enables the REB 551 to be a part of the SMS and/or the SCS at the same time. This means that both the operator in the control room and the relay engineer in the office have the possibility of reading information from the terminal or even changing an active setting group as well as different values of the setting parameters within the setting groups.

The software program SMS-BASE with SM/REB 551, installed in a personal computer, enables the relay engineer to establish communication with the terminal (either direct communication or communication through a telephone network), read information from the relay on a PC screen, and store it in PC files.

The operator in the control room and/or control centre has similar possibilities when one communication port is connected to the SPA bus within the SCS. Communication within the SCS enables time synchronisation of the REB 551 with other equipment in the substation. Similar functionality is also possible when it is connected to the SMS only.

Disturbance records can be collected remotely within the station monitoring system (SMS) by using the SMS-BASE with RECOM. An evaluation of the disturbance records is feasible by means of the REVAL evaluating PC-based program.

1.3.8 Input/output facilities

The basic version of REB 551 comprises of twelve binary inputs and seventeen output relay contacts (one board is delivered as basic). One of them is a switch over contact, used for the signalisation of a continuous self-supervision function, built into REB 551.

Up to four additional printed circuit boards (I/O board), each of them comprising eight binary inputs and twelve independent output relay contacts (two of them are high-speed reed contacts), are available as an option. If the optional voltage selection is used one of the input/output boards are used for this purpose, and up to three can be added. All the binary inputs are freely programmable for any of the built-in functions to assure the greatest possible flexibility. All the REB 551 internal logical signals can control one or more of the output relays.

1.3.9 Trip relay units

Single-phase and/or three-phase standard trip relay units are available as a complement to the REB 551 terminal. They can be specifically useful when designing a 1 1/2-breaker arrangement substation. The units are available with or without a lockout relay and trip coil supervision. Starting conditions for the breaker failure protection and the autorecloser are pre-wired in the units. The units comprise standard COMBIFLEX relays of type RXMS, RXMVE, RXME 18. They are mounted in a 6 U 1/4-rack size ABB case. The single-phase and three-phase trip unit with a lockout relay and trip coil supervision is also available in a standard 4U 19", COMBIFLEX rack, or 6 U 1/1 size ABB case.