RADHL
Multi-terminal Pilot-Wire
Differential Relay

User's guide
1MRK 507 004-UEN
Revision: B
Issued March 2005

Data subject to change
without notice

RADHL with RXHL 401

Features

- **Phase and earth fault protection for cables and overhead lines**
- **Protects feeders with 2, 3 and up to 4-terminals**
- **High speed of operation: 20 - 40 ms depending on number of terminals and CT data**
- **Stability ensured for external faults**
- **All line terminals trip, even with fault current fed from single input terminal**
- **A simple transfer-trip can be obtained by opening of pilot-wires**
- **Pilot-wire voltage limited to about 60 V by zener diodes**
- **Permits the use of low cost 60 V communication type copper pilot-wires**
- **Relay with standard 5 kV insulation level to ground**
- **For pilots > 10 km, close to power cables, 15 kV isolating transformers are available**
- **Standard pilot-wire loop resistance 1000 ohm and 2 μF of inter-core capacitanc**
- **With direct trip contacts and flag indicator (auxiliary trip relay not required)**
- **Test switch RTXP 18 is included**
- **Options with 3-phase over-current and earth-fault starting relays: RXIDK 2H, RXHL 401 /411 (with thermal, breaker failure and reclosing)**

TABLE OF CONTENTS

1 APPLICATION

The standard RADHL may be used in low- and high- voltage networks, to protect overhead lines and cables, with 2- and up to 4-terminal ends. Dedicated metallic plot-wires are required between all terminal ends. With 3- and 4-terminals, one central terminal will be selected as the electrical mid point (EMP), and the pilot-wire loop resistance up to this point may be 500 ohms.

The permissible maximum length of the primary line or cable is related to the capacitive charging current. With an earth fault externally to the protected feeder, a so-called earth-leakage current will enter the feeder and appear to be an internal fault quantity. This must be limited to < 10 % of the main CT rating.

The earth-leakage current of a cable may be 2 - 6 A per km, depending on network voltage and type of cable.

The most sensitive earth-fault operating current is in the range: 25 - 55 % of the CT rating, and depends on the number of terminals. This operating current may be fed from one end only, or divided between line ends. For the 2-terminal scheme the 3-phase operating current is 72 % when fed from one end, i.e. 36 % when fed symmetrically from two ends.

The stability of the relay is based partly on the well-known high impedance theory and the fact that the (RXID) measuring relays at all line ends are situated at a so called electrical mid-point (EMP). At these points the voltage will be zero at through going loads and through faults. The introduction of the voltage limiting zener diodes at all ends make the relay more stable in the event of heavy through faults with risk of CT saturation. When the magnitude of the through fault current increases, the zener diodes start to draw more current. The unbalance current required to cause relay operation is thereby increased and the stability of the relaying scheme is improved.

Broken, or opened, pilot-wires will cause the RADHL to mal operate if the through going load current is more than 36 % of the CT rating. This risk of mal operation can be prevented by including so called over-current starting relays. Three RXIDK 2H, single phase over current relays, may be installed in the phase wires on the primary side of the auxiliary summation CT. Tripping of the circuit breaker at that end will then be dependent on the over current and time delay settings selected on the RXIDK (see diagram 7434 209-FB). Other feeder relays with a number of special features may also be considered, e.g. RXHL 401/ 411 (see Section 12).

Optional pilot-wire supervision may be installed to provide alarm for open, short-circuited and cross-connected pilots.

A simple transfer-trip, of a remote breaker, can be obtained by opening the RADHL's pilot-wires. The operation the 2-terminal RADHL relay then becomes half of the normal operating values, i.e. in the range: 12.5 - 63 % of the CT rating.

2 CURRENT TRANSFORMER REQUIREMENT

The main CT's at the feeder ends need not have the same ratios, because ratio matching can be made in a specially ordered aux sum CT, SLCE 8. The line ends with the smaller ratio will have the standard aux sum-CT (1 A or 5 A), and the other end(s) with a higher ratio will have the special aux sum-CT.

The protection is fully stable during external faults provided the main CT's have a secondary e.m.f. equal to or more than:

E2 = 20 *ir (RCT + RL + Z2 + 5/ ir 2) where:
ir = main CT secondary current
RCT = main CT secondary winding resistance
RL = 1-way wire resistance up to RADHL
Z2 = impedance of other relays

Note:
In systems with the neutral solidly grounded, the RL should include the 2-way resistance value.

The main CT's at the feeder ends must also be of the same class (e.g. 5P20, 10 VA), and they must have similar secondary burden, i.e. pilot-wire lengths and the same type of other (extra) relays, if included. Particularly if the other relays are of the old type with a high burden. If an extra burden is included at one end only, a certain unbalance of will be created. This may be seen as a small unbalance voltage (e.g. 0.1 - 1 V ac) across each measuring diff relay during normal full load.

Example of required knee-point voltage for typical main CT with 5 A sec rating.

ir = 5 A
RCT = 0.3 ohms (e.g. 600 / 5 A)
RL = 0.1 ohm (e.g. 20 meter loop 4 mm^2)
Z2 = 0 (no extra relay)
5/25 = 0.2 ohms (burden of RADHL)
Hence:
E2 = 20 * 5 A (0.3 + 0.1 + 0 + 0.2) = 60 V

A main CT with a standard class: 5P20, 10 VA (10 VA /5^2 =0.4 ohms) and RCT = 0.3 ohms will produce: E2 = 100 A * (0.3 + 0.4) = 70 V, which will be more than adequate.

In some cases the main CT's may comprise two cores of different iron area. By series connecting the secondaries of these cores the total secondary output emf will be increased and in most cases give a better overall knee-point voltage value. We suggest that this possibility be checked in case of stability problem.

3 TYPE OF PILOT WIRES

The typical 2-terminal RADHL can operate over pilot-wires having 1000 ohms of loop resistance and 2 µF of shunt capacitance. With the 3- and 4-terminal RADHL, one of the middle terminals must be selected as the EMP (electrical-mid point). The padding resistor of the relay at the EMP must be set at the max value of 500 ohms. For all the other relay terminals, the pilot-wire loop-resistance up to the EMP may be max 500 ohms (see Fig. 14).

By including a special pilot-wire isolating transformer (see Fig. 1) with turns-ratio 1: 1.7 t, the pilot-wire loop-resistance for the 2-terminal relay may be increased to 2000 ohms, but the permissible inter-core capacitance is reduced to 0.7 uF. With the 3- and 4-terminal relay the loop-resistance up to the EMP may be 1000 ohms and inter-core capacitance 0.7 uF. One isolating transformer is required at each relay terminal.

The pilot-wires may be of the telephone, communication type, with rated voltage 60 V, and with cores twisted into pairs. A common screen, or individually screened pairs, will protect against external interference. The screen may be of aluminium or copper wires and should be grounded at both ends.

When a pilot-wire cable is laid in parallel with a high voltage power cable, it may be subjected to induced voltages between each core and the screen (ground), which can be much higher than the rated voltage between cores (limited to 60 V).

The RADHL has standard insulation strength to ground of 5 kV, which in the majority of installations is more than adequate. However, in some special cases, with very long pilot cables > 10 km, an isolating auxiliary transformer may be installed at all relay ends. This will keep the pilot-wires isolated from ground, and from the relay circuit, by an insulation level of 15 kV. Thus, no dangerous induced voltages in the pilots should be able to reach the relay and cause a flashover to ground.

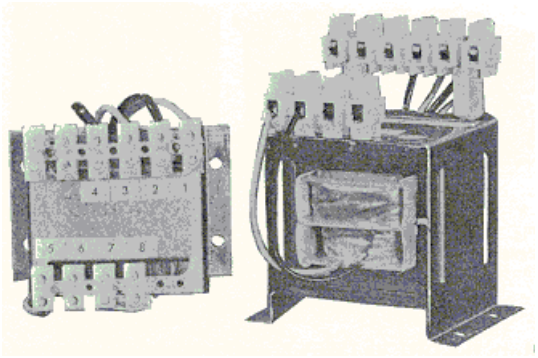

(xx02000473.tif)

Fig. 1 15kV pilot-wire isolation transformer SLCE 8

4 MECHANICAL DESIGN

The RADHL pilot-wire differential relay is installed in the Combiflex system of relay mounting (see 1MRK 513 003-BEN). It includes a test switch RTXP 18, an auxiliary summation CT type SLCE 8, and a main plug in 4-seat relay unit RXDHL 4. The RADHL diff relay is available in two different designs. The aux sum-CT may be included in the standard relay frame, or it may be supplied loose for mounting separately in the rear of the relay cubicle.

The RTXP 18 test switch enables easy testing of each RADHL relay (see 1MRK 512 001-BEN). The RXDHL 4 unit includes the internal measuring relay (Re), which is fed via a full-wave rectifier. This rectifier is connected between: the mid point of the aux sum-CT secondary winding, and the internal padding resistor. The dc-operating burden of the Re-relay is about:

10 mA * 10 V = 100 mW.

The RADHL 4 unit also includes the zener diodes, a fixed 500 ohms resistor, the adjustable 33 - 499 ohms padding resistor and a red flag indicator. This flag is seen at the front of the unit and can be manually reset, or electrically via a remote (external) push button:

The basic version of the RADHL pilot-wire diff relay consists of:

- 1- RTXP 18, test switch
- 1 - RADHL 4, measuring module (see Fig. 2)
- 1 - SLCE 8, auxiliary summation CT (see Fig. 3)

Additional plug in units to be ordered separately as required:

- 1 -RXME 1 tripping relay with heavy duty contacts
- 1 - RXMS 1 high speed tripping relay
- 3 - RXIDK 2H single phase fault detectors
- 1 - RXHL 401 3-ph and earth fault detector
- 1 - RXHL 411 3-ph and earth fault + breaker fail


(xx02000527.tif)

Fig. 2 Pilot-wire relay RXDHL 4


(se970868.eps)

Fig. 3 Summation CT type SLCE 8

5 PILOT WIRE PADDING RESISTOR SETTINGS

The padding resistors are accessed at the rear of the terminal base. Two pin-pin combi-flex 10 Amp leads are at the delivery from our works inserted at the RXDHL terminals 313-314 and 424-426 respectively, representing a padding resistance of 266 ohms. The 3-resistors shown (Fig. 5) on the left hand side, terminals: 313 - 316 are each 33 ohms, and the four resistors on the right hand side, terminals: 422 - 426 are each 100 ohms.

The padding resistance selected in the case of the 2-terminal scheme need not be the same at each end. For example, at one end it may be 400 ohms and at the other end 433 ohms. The actual pilot-wire loop resistance may in such a case be: 1000 - 833 = 166 ohms (+/-) 16 ohms, i.e. within the range 150 - 182 ohms. If the pilot-wire loop resistance is within the range: 500 - 1000 ohms, the padding resistance at one end may be zero, and at the other end adjusted in the range 0 - 499 ohms in order to obtain the total value of 1000 ohm.

Adjusting resistance (ohms)	Connect COMBIFLEX leads to terminal
0	426-422 and 313-316
33	426-422 and 313-315
66	426-422 and 313-314
100	426-423 and 313-316
133	426-423 and 313-315
166	426-423 and 313-314
200	426-424 and 313-316
233	426-424 and 313-315
266	426-424 and 313-314
300	426-425 and 313-316
333	426-425 and 313-315
366	426-425 and 313-314
400	426-426 and 313-316
433	426-426 and 313-315
466	426-426 and 313-314
499	426-426 and 313-311

Fig. 4 The padding resistance

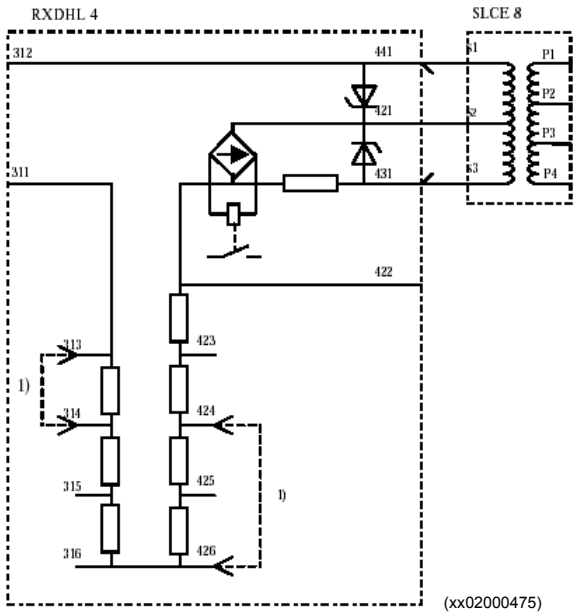

Fig. 5 Terminal diagram for RXDHL 4

6 PRINCIPLES OF OPERATION

6.1 Auxiliary sum-CT

The multi-terminal RADHL pilot-wire differential relay compares the curents at all line terminals. The total incoming and outgoing current must be equal during normal load and through fault. Two pilot-wire cores are connected from each relay terminal to a common electrical mid-point. Under normal service conditions, and also during external faults, the circulating currents produce a voltage drop across a 500 ohms resistor within the relay, which results in zero voltage across the measuring relay Re at all ends. However, in the case of an internal fault, the operating currents in the (Re) relays at all line ends will be of the same value, regardless of the primary fault current being supplied from one end only, or from all line ends. Hence, all line ends will be tripped at the same time in the case of an internal fault.

6.1.1 Auxiliary sum-CT

In order to simplify the installation, an auxiliary summation CT is installed at each feeder end. This aux sum-CT has a 4-wire input, from all the 3-phases + neutral, and a 3-wire output to the single measuring relay Re and the two pilot-wire cores.

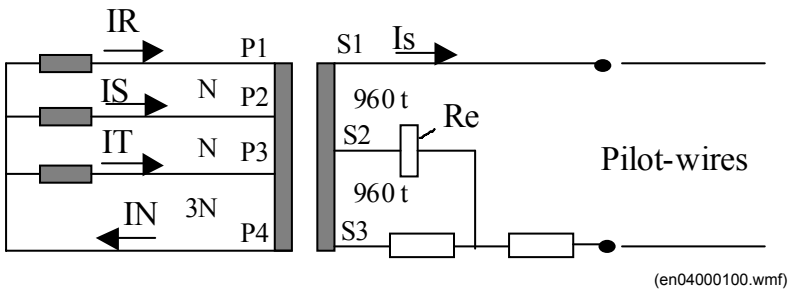

Fig. 6 Auxiliary summation CT type SLCE 8

The auxiliary summation CT has one primary winding P1 – P4, with tappings P2 and P3. The primary turns distribution is N-N-3*N, where the N-number of primary turns depends on the rated secondary current of the main CT, as follows:

Main CT sec current:	1 A	2 A	5 A
Value of N-turns:	20 t	10 t	4 t

The secondary winding S1-S3 has one mid-point tapping S2. The total number of turns is 2 * 960 = 1920 t. This value of secondary turns is the same for all the aux sum-CT's.

6.1.2 Relay operating equation

With incoming balanced 3-phase load currents, we have the vectors:
IR + IS + IT = IN = 0

The absolute value of the primary Amp-turns of the aux CT may be given by

At prim = IR * N + (-IT) * N = IR * V3 * N

Operating equations

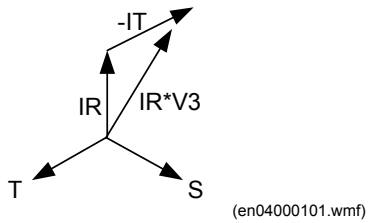

Fig. 7 Vector diagram with N = 1 t

The general equation for calculating the 3-phase balanced-load, current-ratio, of the aux sum-CT is therefore given by:
IR * V3 * N t / 1920 t = Is, where the secondary current Is = 0.018 A for all values of rated main CT secondary currents

Example with 1 A rated main CT:
1 A * V3 * 20 t / 1920 t = 0.018 A , and with 5 A rated CT:
5 A * V3 * 4 t / 1920 t = 0.018 A.

6.1.3 Relay operating current

Relay operating current, fed to the primary of the aux sum-CT

For simplicity, assume that the operating current of the Re is 10 mA. Also, consider that the operation of the relay shall be tested in the laboratory without any connection to pilot wires, i.e. without connection to a remote relay. The aux CT secondary operating amp-turns is given by:
At (op) = 0.010 A * 960 t = 9.6 At

With the 1 A rated aux CT the R - N primary operating current becomes,
I (R-N) op = 9.6 At / 100 t = 0.096 A, and with an R – S fault,
I(R-S) op = 9.6 At / 20 t = 0.48 A , and 3-ph fault
I(RST) op = 9.6 At / V3 * 20 t = 0.28 A

With the 5 A rated aux CT we have I (R-N) op = 9.6 At / 20 t = 0.48 A

Note: In an actual case these operating values may be increased by:
10 - 20 %

In some LV distribution networks the neutral point may be floating, or high impedance earthed. The earth fault currents will then be very small, and line CT’s may be installed only in the two outer phases. The neutral point of the line CT’s should then be connected to terminal P2 of the SLCE 8 and the terminal P4 may be left free to float. The RADHL will in such cases not operate for earth faults.

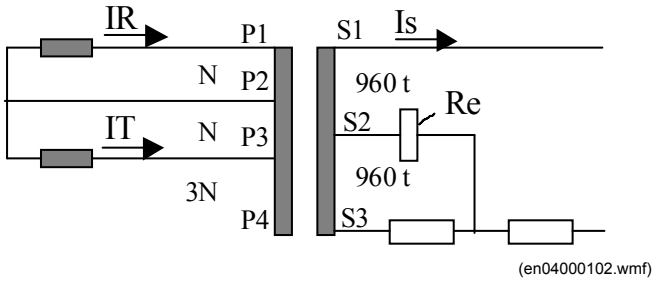

Fig. 8 With main CT's in 2-phases only

6.2 2-Terminals: normal load current

The most typical application of the pilot-wire diff relay is the 2-terminal arrangement. For simplicity, and for ease of explaining the general principles, we may assume that the pilot-wire current at normal load is 20 mA. The aux CT secondary output voltages at each end, then becomes 20 V, because the loop-resistance of each relay up to the electrical mid-point EMP is 1000 ohms. Hence, the two relays at each end will work fully symmetrical, and the total pilot-wire burden will be shared equally between the relays. Also, we may assume that the pilot-wire loop resistance seen at the output terminals: 9A - 10A, at each relay up to the mid-point is 500 ohms. The internal padding resistor of each relay may therefore be set at zero.

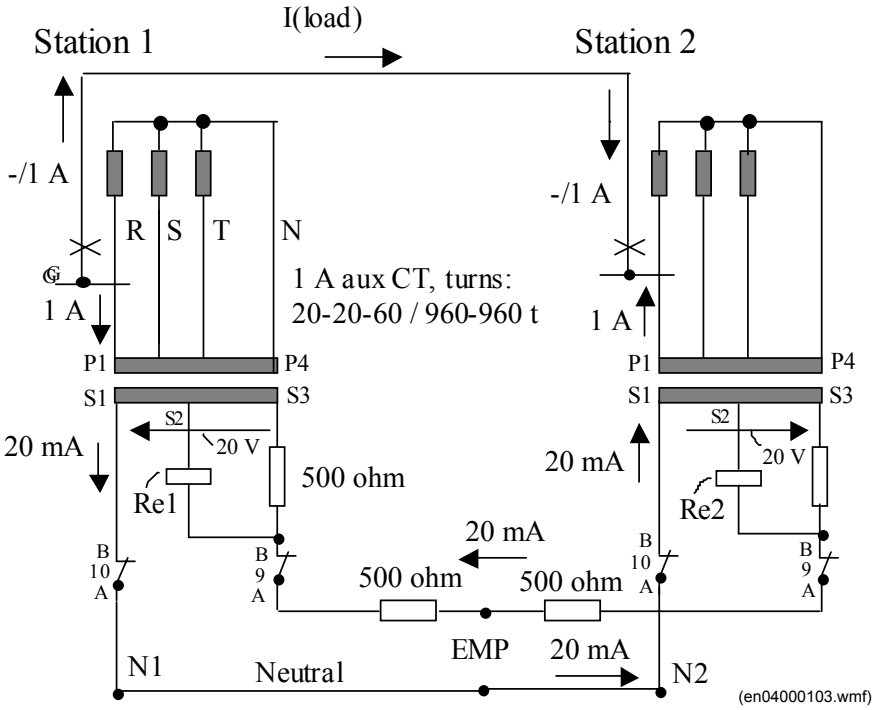

Fig. 9 RADHL in a 2-terminal arrangement. EMP = Electrical Mid-Point
For simplicity we have selected pilot-wire current Is = 20 mA

6.2.1 Normal load voltage diagram

The voltage diagram indicate that the Re1 and Re2 measuring relays at the two ends, are in a position with zero volts across their operating coils. Also, in the case with a large through-fault current, the output voltages S1-S3 of the aux CT's will be limited to about 60 V by zener diodes and the aux CT's will therefore not saturate easily. If some main CT error should occur, both relay ends will show similar errors and the measuring relays Re will remain at zero potential, i.e. the RADHL will be stable in the case of through faults.

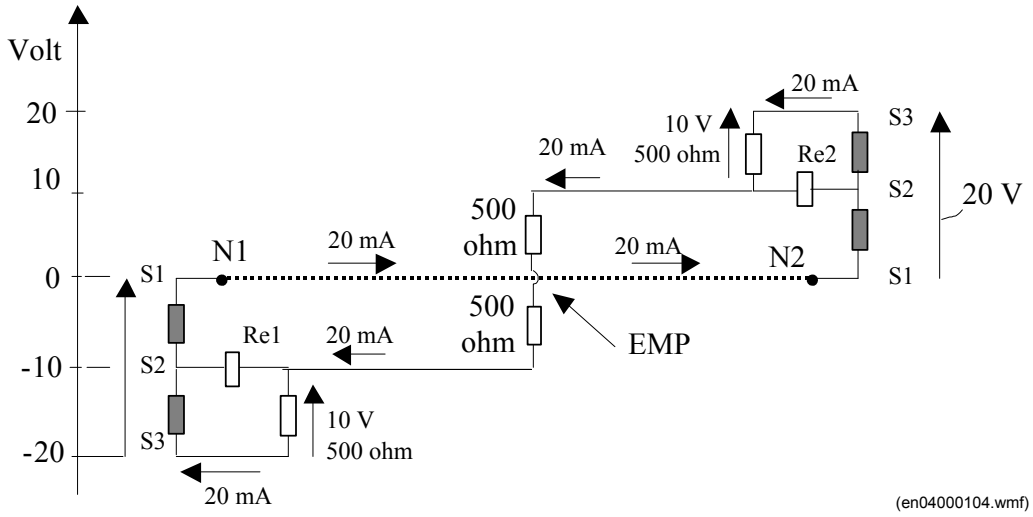

Fig. 10 Typical voltage distribution diagram with 20 mA of circulating pilot-wire current

6.2.2 Fault current distribution

In the event of an internal fault, with infeed from one end only, both relays: Re:1 and :2, at the two ends, will operate at the same time, because both relays will receive the same operating current, for simplicity assumed to be about 10 mA.

The operating amp-turns of the feeding aux CT, seen at the secondary side, becomes: 5 mA * 960 t + 15 mA * 960 t = 19.2 At, and the primary R-N operating current: I(R-N) = 19.2 At / 100 t = 0.0192 A with the 1 A rated aux CT (in actual case about 20 % higher).The current in the pilot-wire required to cause operation at the remote end will be only 5 mA, because its aux CT will work as an auto-transformer. The pilot-wire current of 5 mA will enter the S1 terminal, and 5 mA must also flow in the S2-S3 winding in order to obtain the necessary amp-turns balance. Hence, at terminal S2 an output of 10 mA will be obtained. This will cause the Re2 to operate.

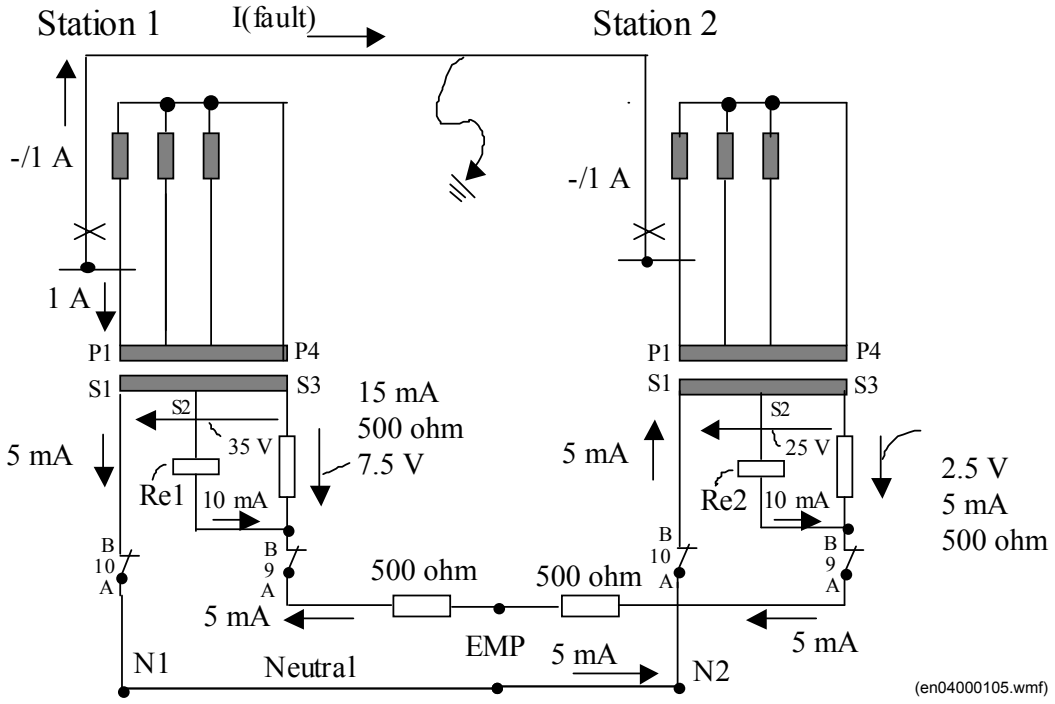

Fig. 11 Internal fault with infeed from one end only

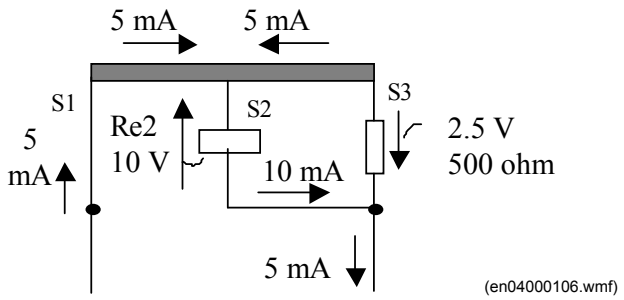

*Fig. 12 Stn: 2 has no primary current, and its aux CT secondary winding will work as an auto-transformers: S1 – S3 voltage = 2 * 12.5 = 25 V.*

6.2.3 Fault voltage diagram

For simplicity it is assumed that the Re:1 and :2 will operate at 10 mA and 10 V. The sending end voltage S1 – S3 is: 2 * 17.5 = 35 V and the receiving end 2 * 12.5 = 25 V. The actual pickup values may be 20 % higher.

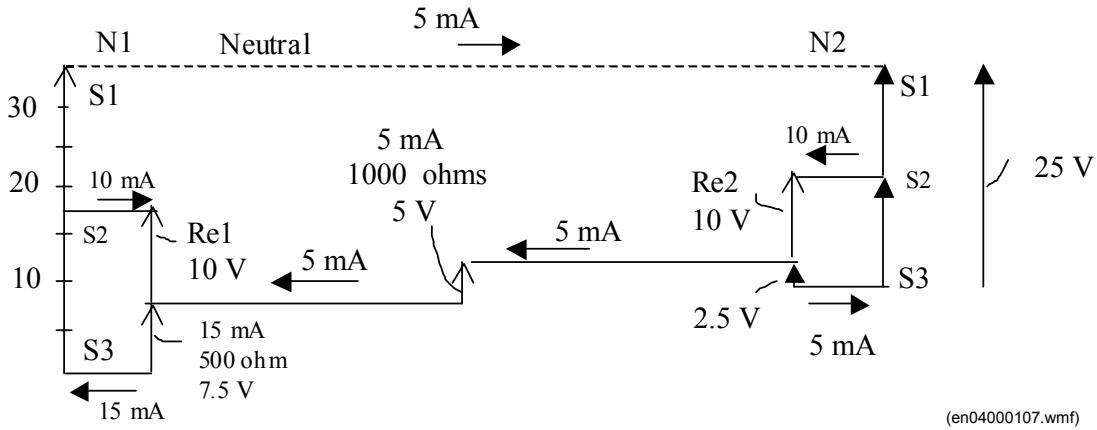

Fig. 13 Voltage diagram with internal fault and single end feeding. Both relays receives 10 mA and operate at the same time.

6.3 4-Terminals: normal load current

The RADHL may be extended to include up to 4-terminals. From each terminal the pilot-wire resistance up to the EMP may be 500 ohms. During normal load and through faults, all the relays Re: 1, 2, 3 and 4 will be at zero potential and no operation will occur. For simplicity: Consider that the full load input at Stn1 represents 18 mA of pilot-wire current and at each of the remote stations there are 6 mA of outgoing current.

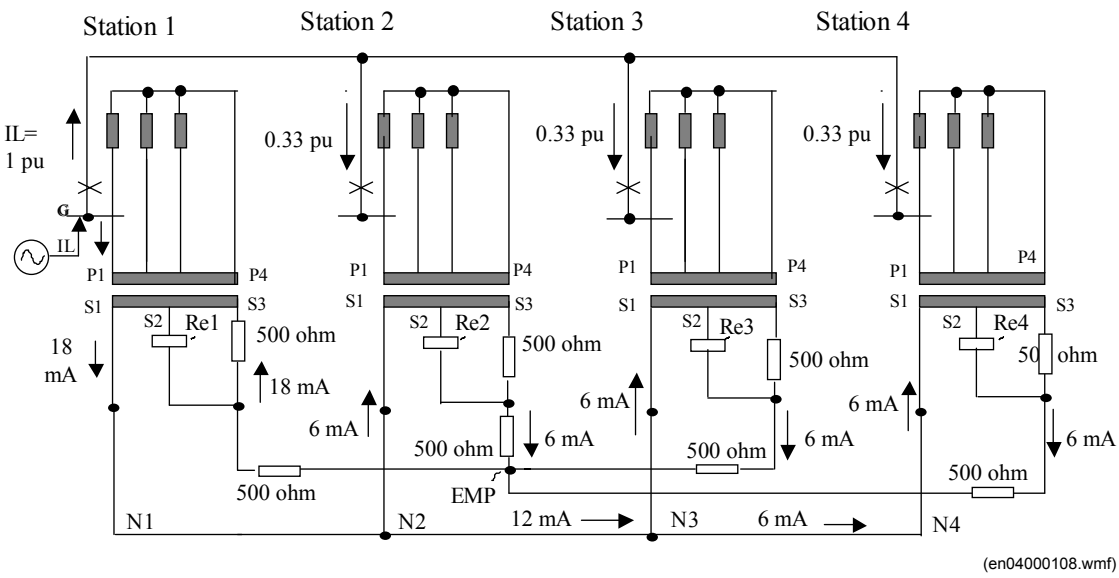

Fig. 14 4-terminal arrangement. The pilot-wire resistance of each relay up to the mid point EMP may be max 500 ohms.

6.3.1 Normal load voltage diagram

At the sending end the output voltage S1- S3 is 18 V and at each of the remote ends the S3 – S1 voltage is 6 V. All relays Re: 1- 4 will be at zero potential..The Neutral line and the EMP is at zero potential difference. This will always be the case independent of the actual loads at all stations, because all relays are connected symmetrically to the EMP.

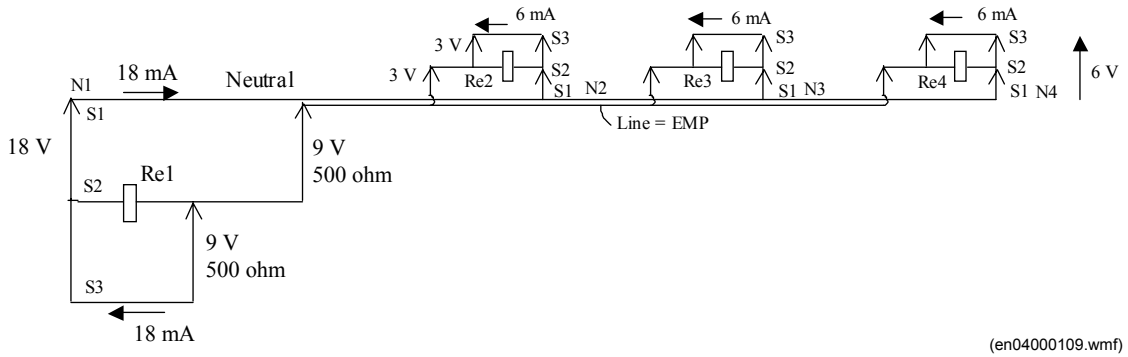

Fig. 15 Voltage diagram with normal through going load. All relays Re.. at zero potential differences.

6.3.2 Fault current distribution

All relays Re:1 – 4 will operate at the same time, because they will receive the same operating current (assumed to be 10 mA).The operating amp-turns of the feeding aux CT will be:15mA * 960 t + 25 mA * 960 t = 38.4 At, and the primary R – N operating current: I(R-N) op = 38.4 At / 100 t = 0.384 A with the 1 A rated aux CT (in actual case 30 % higher due to higher voltage and magnetising currents)At the sending-end the pilot-wire current is 15 mA and at each receiving-end 5 mA.

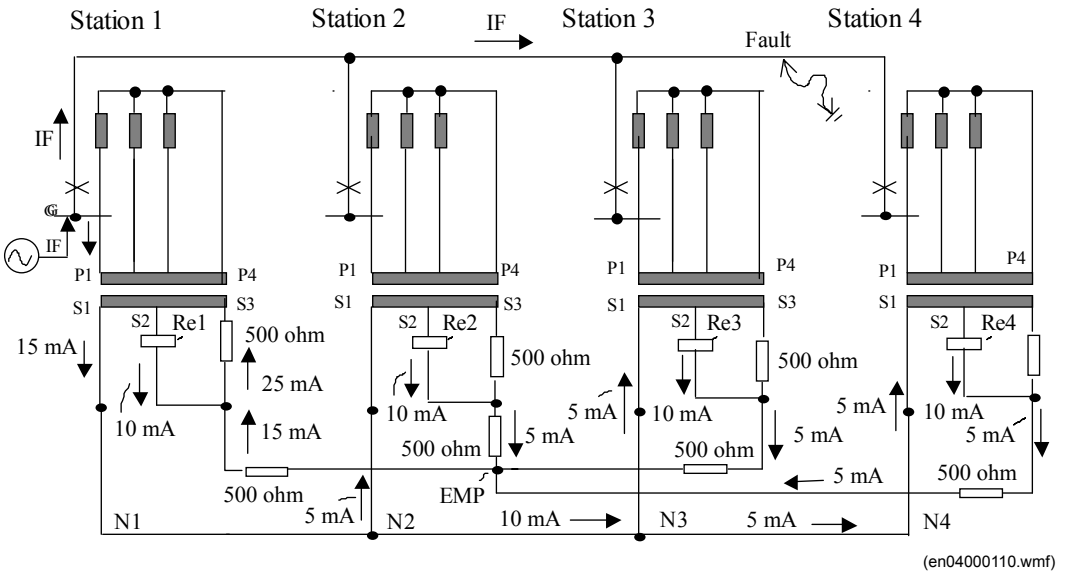

Fig. 16 4-Terminals with internal fault fed from one end. All relays Re:1 – 4 will operate at the same time.

6.3.3 Fault voltage diagram

The sending end voltage S1 – S3 is 2 * (10 V + 12.5 V) = 45 V and at the receiving ends 2 * 12.5 V = 25 V All relays Re: 1-2-3-4 operate at 10 V and 10 mA.

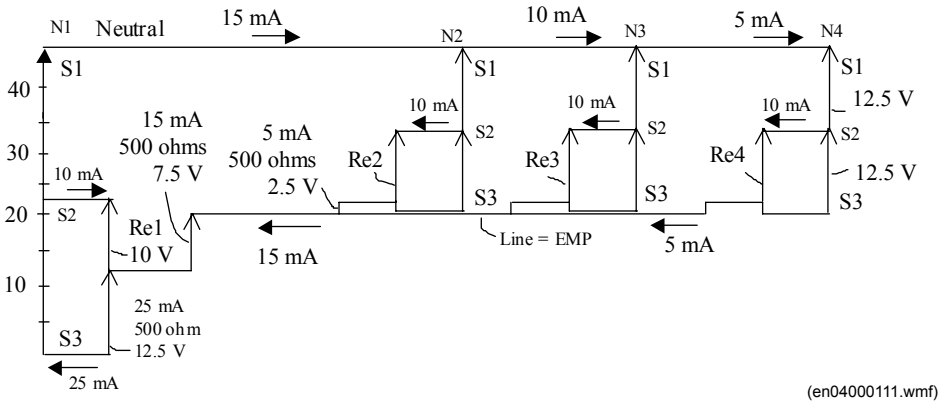

Fig. 17 Voltage diagram with internal fault and single infeed.

7 INTERTRIPPING

The figure shows a typical situation where intertripping is required. At the end of a: 0 – 12 km long feeder there is a step down power-transformer. The transformer's diff + O/C & E/F relays will trip the LV circuit breaker directly, and may cause tripping of the remote HV circuit breaker by means of intertripping.

This is achieved by opening the RADHL's pilot-wires. The operating current of the RADHL then becomes half of the normal operating values, because each end-relay need not (cannot) send an operating current via the pilots to the remote end. The operating sensitivity of this intertripping scheme is, therefore in the range: 12.5 – 62.5 % of the CT rating, and depends on the type of fault within the area of the power transformer.

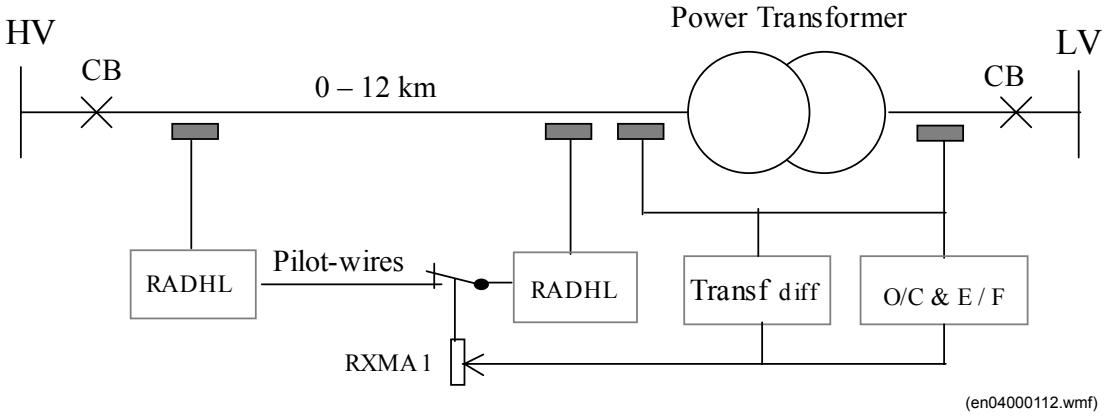

Fig. 18 The feeder 0 – 12 km long may be protected by RADHL, and the power transformer by a differential relay + O/C & E / F. Intertripping can be obtained by opening the pilot-wires of the RADHL

7.1 Opening pilot-wires

Intertripping by opening pilot wires . When the pilot wires are opened, the aux CT secondary current can only flow in the S2-S3 winding = 960 t. Assume relay operating current is about 10 mA, then the primary aux CT operating current becomes:

I(R-N) = 960 t * 0.01 A / 100 t = 0.096 A i.e. about 10 % of In I(R-S) = 5 * 10 % = 50 % of In, and I(R-S-T) = 50 % / V3 = ca 30 %

The RXMA1 aux relay opening the pilot-wires should normally be floating, i.e. not connected to any ground potential.

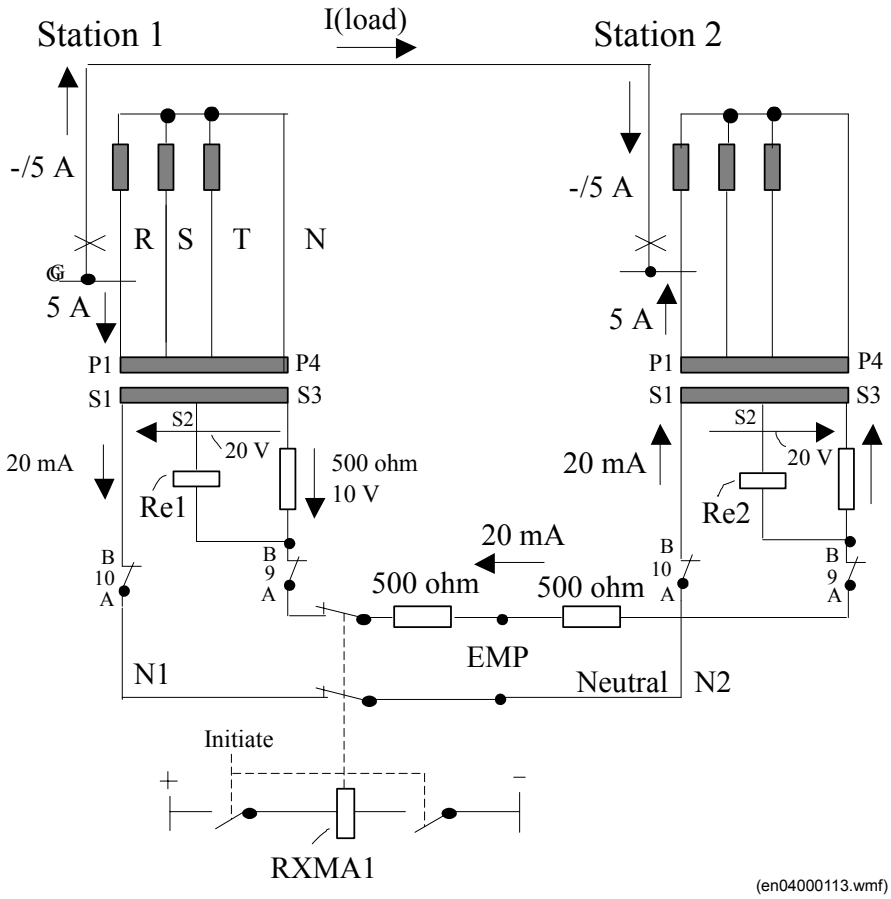

Fig. 19 The RXMA 1 may be initiated by all the power-transformer relays which require tripping of the remote CB.

8 PILOT-WIRE SUPERVISION

The correct working of the pilot-wires can be supervised by injecting 2 mA of circulating dc current. This will detect open pilot-wires, shorted pilots and also cross connected pilots. The principles of the scheme is based on the balanced-bridge feature with a sensitive polarized directional DR relay type RXCLK 2.

The voltages: U1 = U2 =12 V dc, produce 2 mA of circulating current through a system comprising a lumped resistance of 6 k ohm (close to U2) and distributed external resistances of 4000 ohm + 4 * 500 ohm resistors at Stn: 3 and :1. The voltage across the DR is zero during balanced conditions. Relay operation will occur when any of the pilots between Stns: 1-2 or 2-3 are interrupted , shorted or cross-connected. At Stn:1 we have the sending end equipment and at Stn:2 and :3 the receiving end equipment. The Stn:2 has in fact no pilot-wire as it is directly connected to the EMP, and the capacitor C is therefore used only to block the dc current. In Stn:3 the dc current will pass the diode D1 and the resistor of 4000 ohms. The capacitor C in all stations is large enough to enable the 50 – 60 Hz currents to circulate without any problems.

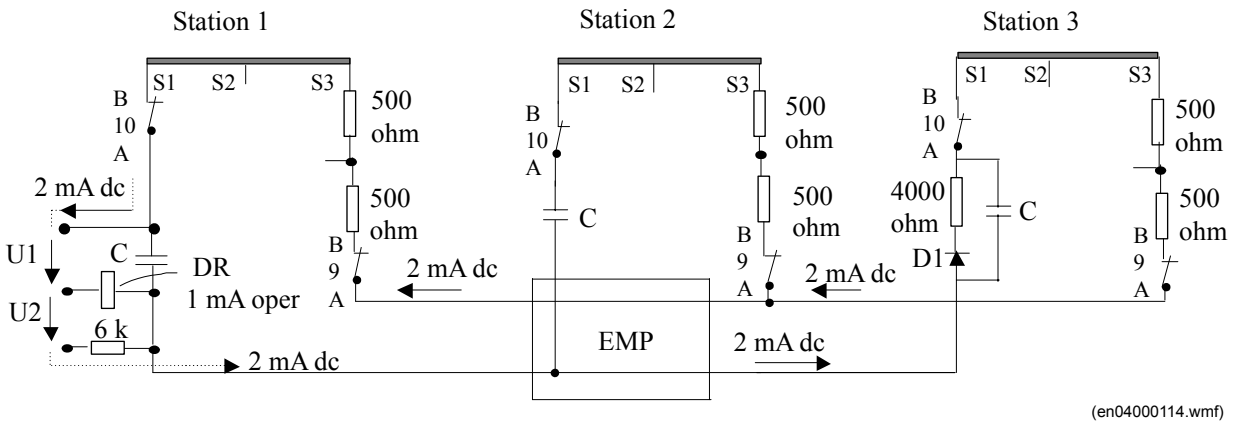

Fig. 20 Pilot-Wire Supervision with 3-Terminal RADHL. Stn 2 is directly connected to the Electrical-Mid Point

8.1 Faulty pilot-wire

For simplicity we may neglect the impedance of the DR.When the pilots are wrongly opened, only the U2 voltage can send a current through the DR. The U1 voltage cannot send any current because the pilots are opened. The direction of current flow indicates: Opened pilots.

When the pilots are shorted, the U1 may send a current through the DR plus the 2* 500 ohms resistors. The U2 may send a current through the 6 k ohm + the DR in the oposite direction. The U1 will produce the largest current and this direction of flow will indicate: Shorted pilots.

When the pilots are crossed, the 2 mA of circulating current cannot flow because of the blocking diode D1. The indication will be the same as for: Opened pilots.

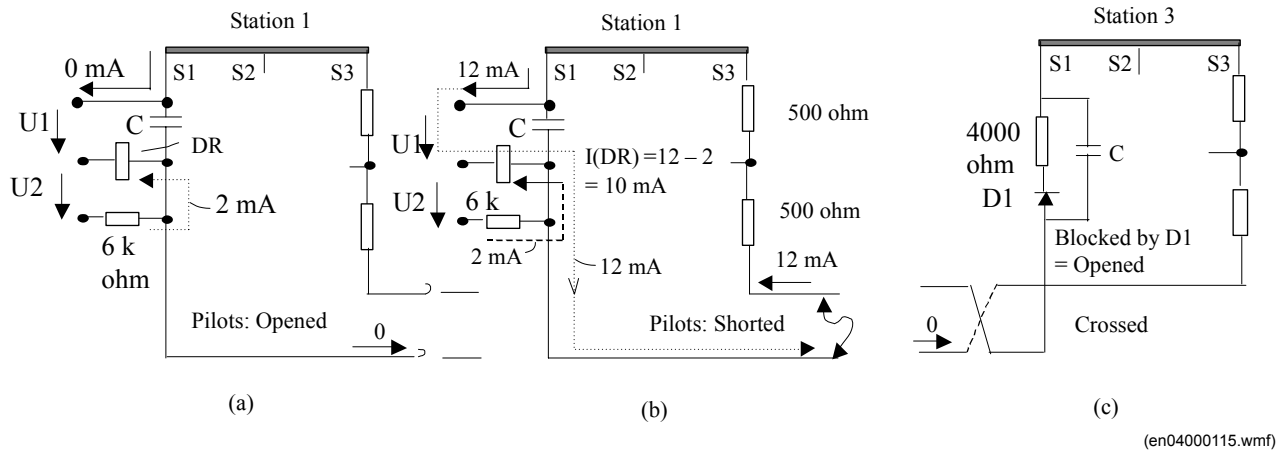

Fig. 21 The pilots may be wrongly: opened (a), shorted (b) and cross connected (c)

8.2 Pilot-wire dc loop circuit

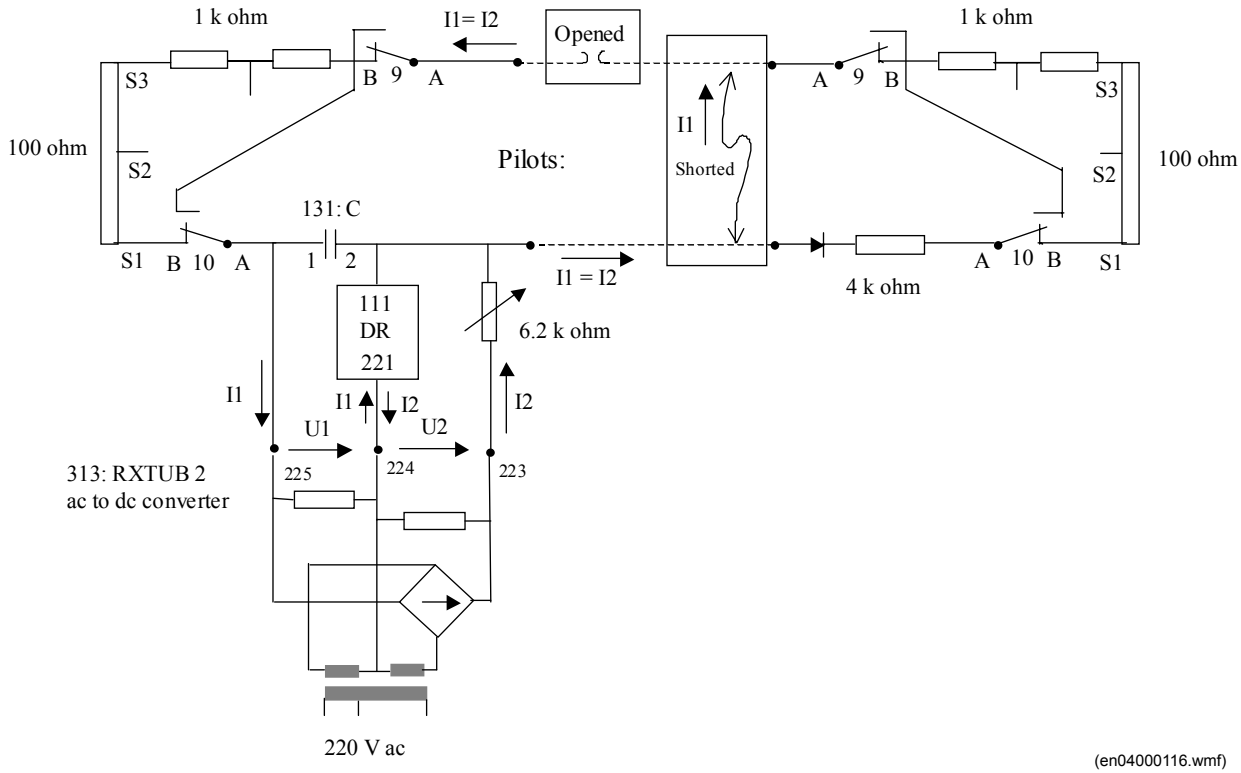

Fig. 22 For simplicity consider:During normal service I1 = I2 = 2 mA and the DR current is zero.

With shorted pilots I1 = 12 V / 1 k ohm = 12 mA and I2 = 12 V / 6 k ohm = 2 mA and I(DR) = 12 – 2 = 10 mA towards terminal 221

With open pilots I1 = 0 and I2 = 2 mA leaving terminal 221

The actual value of the external dc-loop is about 6.2 k ohms and the adjustable sending end resistor should be set accordingly.

8.3 Unbalance

An unbalance can be created by inserting the test handle RTXH in the test switch at the sending end, or at the remote end. The external loop-resistance will then be reduced from about: 4000 + 4 * 500 = 6000 ohm, to about 4000 + 2* 500 = 5000 ohm.

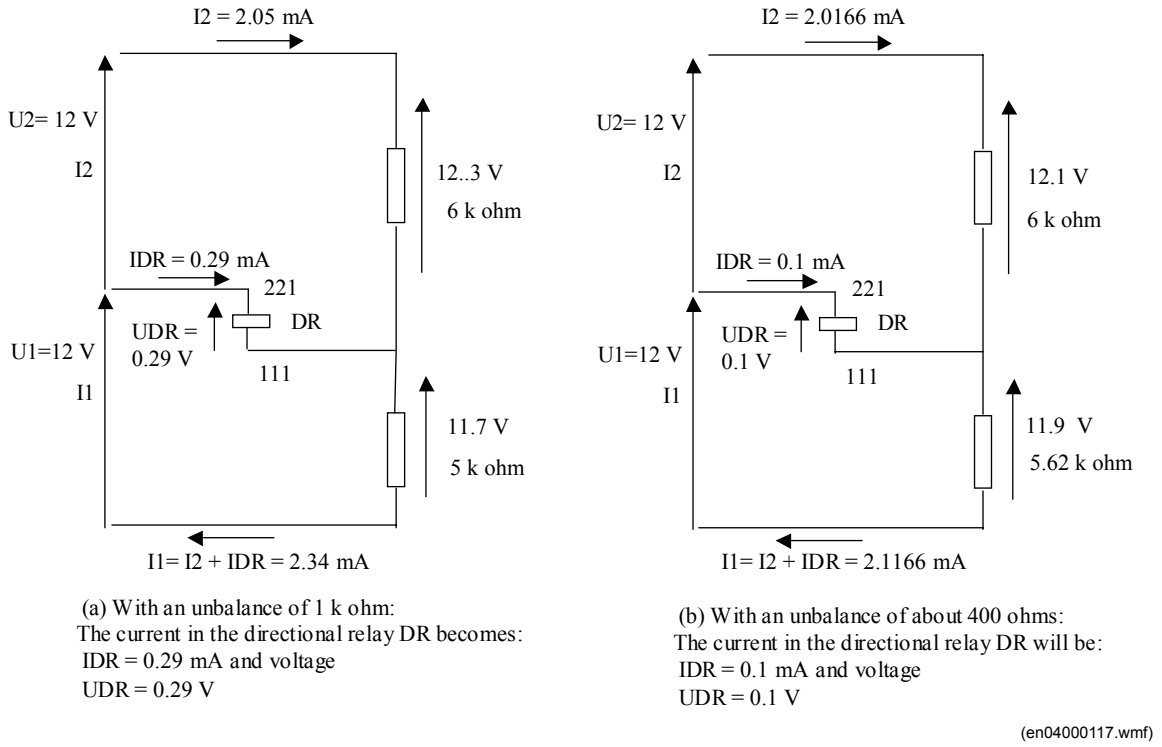

Fig. 23 The directional relay DR (RXCLK) will obtain a spill quantity when the dc resistance of the two loops differ.

Fig. 24 Pilot-wire supervision equipment

9 COMMISSIONING

It is recommended that commissioning be made with the protected feeder in normal service with a load current of 10 % or more. The pilot-wire current will then be about 2 mA and the correct polarity of all the CT circuits is easily checked.

9.1 Equipment required

1 - Test set type Sverker or similar

1 - RTXH-18 test handle with test leads

1 - Multi-purpose: voltmeter, ammeter and ohmmeter

2 - RTXM ammeter test plug

1 - RTXB trip circuit blocking pin per relay terminal.

9.2 Test procedure

The correct operation of the RADHL relay may be tested by inserting the RTXH test handle into the test switch.

- All main CT secondary terminals, at all feeder ends, must be shorted at all phases and disconnected from the RADHL. All relay trip circuits must be disconnected. This may be achieved by inserting the RTXB blocking pin in test switch terminal 17. The operation of the auxiliary tripping relay can be observed by connecting a bleep-tester, or voltmeter, at the combiflex terminals of the RTXM.
- Inject a current to the RTXH terminals: 3 and 6 and check that the R - N operating current is about 50 % of the normal operating value, i.e. about 12 % of the CT rating (Ir).
- Inject a current to terminals 4 - 6 and 5 - 6, and check that operation for these phases is obtained with currents of about: (5 t /4 t)* 12 = 15 % and (5 t / 3 t) * 12 = 20 % of Ir

These tests confirm that the aux sum-CT and the RADHL relay are working correctly.

All relays at all ends must be tested similarly.

Check that the pilot-wires and the padding resistors are correctly adjusted as described in Section 5.

Remove the test handle (at all ends) and, at one end, inject a current at the R-N primary terminals of the aux sum CT.

Check that all relays operate as follows:

2 -terminal relay, both relays operate at about 24 % of rated current.

3 - terminal relay, all 3-relays operate at about 32 % of rated current

4 -terminal relay, all 4-relays operate at about 55 % of rated current.

These tests confirm that the connections to the remote ends are correct.

9.3 CT polarity check

This is most easily carried out when the primary load current is 10 % or more.

All main CT secondary circuits must now be connected to the aux sum CT primary terminals. However, all the main CT secondary circuits must remain short-circuited. In one station the following should be done:

1) Remove carefully the R - N shorting lead and observe that no sparking occurs.

2) Remove the shorting leads of the other phases.

3) Insert the ammeter test plug: RTHM + ammeter, in the pilot-wire test switch terminal: 9 or 10.

- Record the pilot-wire current: I(pw) =
- 4) Record the primary load current I(pr) =
- Connect an ac-voltmeter to the RXDHL's measuring relay terminals: 421 - 422, and record the unbalance relay voltage: (Re) =

Note: This voltage may be in the range: 1 - 6 V ac, depending on the primary load. Such a small unbalance is acceptable to remain intact and the commissioning tests may therefore be continued in the remote stations.

At each of the remote stations the following should be done:

- Connect an ac-voltmeter to the RXDHL's measuring relay terminals: 421 - 422, and record the unbalance relay voltage: U(Re) = V ac

This voltage should be less than that recorded in the 1'st station, provided the primary load current is the same.

1) Remove carefully the R - N shorting lead and observe that no sparking occurs.

2) Remove the shorting leads of the other phases.

3) Record the unbalance relay voltage: U(Re) = V ac

Note: When all the remote relays are in service, the U(Re) must be less than 2 V ac,
when the primary load is 50 % of Ir..

At the 1'st station.

- Check that the U(Re) is less than 2 V dc when the primary load is 50 % of Ir

The multi-terminal RADHL relay may now be put in full service and the RTXB blocking of the trip circuits may be removed.

9.4 Pilot-wire supervision (PWS)

Ordering number: 1MRK 001 357-AA. Circuit diagram 1MRK 001 358-AA

All RADHL trip circuits must be blocked. The blocking pin RTXB may be inserted in test terminal 17. All main CT secondary circuits must be shorted.

- Check that the adjustable resistor (5 + 3.9 kohm) at the sending end in the capacitor unit 125:2 - 3 are adjusted to about 6.2 kohm.
- Check that the external, pilot-wire dc-loop circuit resistance is about 6.2 kohms. See Fig. 22. Insert the ammeter test plug RTXM in the test switch terminal: 10. An ohmmeter may be connected to the RTXM's left hand side (red) banana plug and the capacitor terminal 125:2. The internal loading resistor of the RXTUB 2 will then not affect the measurement. The RTXM's right hand side (blue) banana plug must be kept insulated.
- Measured external dc-loop resistance:
- Switch on the ac supply to the RXTUB 2, and check with the RTXM + ammeter, in test terminal 10, that the dc current is about 2 mA dc
- A dc voltmeter may now be connected to the RXCLK terminals 101:111 - 221, with (+) to:111. The resistor 125:2 - 3 may be adjusted to about zero, or + 0.1 V dc. The extra + unbalance voltage will increase the margin to get good operation on: Open pilot-wire.
- Insert the: RTXM + dc voltmeter, in test switch terminal 10 and check that the dc voltage (U1 in Fig. 22) is about 12 V dc.
- Check that the: Open pilot-wire alarm is obtained after 5 sec set on 113: RXKA 1.
- Put a short circuit on the pilot-wire terminals and check that the: Shorted pilot-wire alarm is obtained after 5 sec set on 119: RXKA 1.

The PWS alarm may now be put in normal service.

10 TECHNICAL DATA

Rated current, I_r	1 or 5 A		
Ac burden	3 VA, total for three-phase		
Continuous overload capacity	$2 \cdot I_r$		
Frequency	50-60 Hz		
Sensitivity: earth faults phase faults	2-terminals 25-42% of I_r 64-126% of I_r	3-terminals 40-66% 100-200%	4-terminals 60-100% 150-300%
Operating time	20 ms at 1,5 $I_{pick\text{-}up}$		
Maximum pilot-wire resistance	1000 ohms (2000 ohms with isolating transformer ratio 1:1,7)		
Maximum pilot-wire capacitance	2,0 µF (0,7 µF with isolating transformer ratio 1:1.7)		
Dielectric tests: current circuits pilot-wire remaining circuits	 50 Hz, 2,5 kV, 1 min 50 Hz, 5,0 kV, 1 min 50 Hz, 2,0 kV, 1 min		
Impulse voltage test	1,2/50 µs, 5 kV, 0,5 J		
Disturbance Tests: Power frequency test Fast frequency test 1 MHz burst test	 50 Hz, 0,5 kV, 2 min 4-8 kV, 2 min 2,5 kV, 2 s		
Flag relay auxiliary voltage	24-55 V or 110-250 V		
Trip outputs	2 make contacts capable of closing 30A dc for 200ms		

11 ORDERING

Specify:

Quantity ☐

Ordering number ☐ according to table

Rated current ☐ 1 A ☐ 5 A

Auxiliary voltage UL ☐ 24 V ☐ 48 V ☐ 110 V ☐ 125 V ☐ 220 V ☐ 250 V

Ordering number selection table for two terminals application

Pilot-wire relay	**Dimen-sions**	**Weight**	**Terminal diagram**	**Ordering No.**
Basic version (includes summation CT SLCE 8 and test switch RTXP 18)	4U 36C	5,2 kg	7434 209-EAA	RK 612 001-EA
Basic version + output relay RXME 1	4U 42C	5,7 kg	7434 209-GAA	RK 612 001-GA
Basic version + output relay RXMS 1	4U 42C	5,7 kg	7434 209-HAA	RK 612 001-HA
Basic version with summation CT furnished loose	4U 18C	3,0 kg	7434 209-ACA	RK 612 001-AC
Basic version with summation CT furnished loose + output relay RXME 1	4U 24C	5,3 kg	7434 209-BCA	RK 612 001-BC
Basic version with summation CT furnished loose + output relay RXMS 1	4U 24C	5,4 kg	7434 209-DAA	RK 612 001-DA
Pilot-wire supervision equipment:				
Sending end unit	4U 48C	6,5 kg	1MRK 001 358-AAA	1MRK 001 357-AA
Receiving end unit	4U 18C	2,0 kg	7434 211-CA	7434 210-CA
SLCE 8 - 15 kV Pilot-wire isolation transformer		3,6 kg		
Ratio 1:1 for 1000 Ohm pilot-wire				4785 040-AUP
Ratio 1:1,7 for 2000 Ohm pilot-wire				4785 040-BAL
As spare part				
RXDHL 4 loose relay[1)]	RX4	1,5 kg	Fig. 5	RK 612 010-EA
SLCE 8 summation CT 5 A		3,6 kg	Fig. 5	4785 040-SY
SLCE 8 summation CT 1 A		3,6 kg	Fig. 5	4785 040-SV

[1)] Please note that terminal base RX4 is not included.

11.1 Versions with additional fault detectors

Specify:

Quantity ☐

Ordering number ☐ according to table

Rated current ☐ 1 A ☐ 5 A

AC inputs for RXHL 401 and RXHL 411

Rated phase current I_r = 1 A, rated neutral current IN_r = 0.1 A	☐ 1MRK 000 322-FA
Rated phase current I_r = 1 A, rated neutral current IN_r = 1 A	☐ 1MRK 000 322-FB
Rated phase current I_r = 5 A, rated neutral current IN_r = 0.1 A	☐ 1MRK 000 322-FC
Rated phase current I_r = 5 A, rated neutral current IN_r = 1 A	☐ 1MRK 000 322-FD
Rated phase current I_r = 5 A, rated neutral current IN_r = 5 A	☐ 1MRK 000 322-FE

Ordering number selection table for two terminals application

Pilot-wire relay	Dimen-sions	Weight	Terminal diagram	Ordering No.
Basic version + 3 single phase fault detectors type RXIDK 2H	4U 60C	7,5 kg	7434 209-FBA	RK 612 001-FB
Basic version + 3 phase and earth fault detectors type RXHL 401	4U 60C	6,5 kg	1MRK002078-AAA	1MRK002077-AA
Basic version + 3 phase and earth fault detectors type RXHL 411	4U 60C	6,5 kg	1MRK002078-AAA	1MRK002077-AB

Options for RXHL 411

Automatic reclosing function with intentional overreach trip function included	☐ 1MRK 000 200-BA
Binary I/O module (inputs 4/outputs 4)	☐ 1MRK 000 322-ET

11.1.1 Mounting and testing details

- RADHL and the pilot-wire supervision equipment are delivered mounted on apparatus bars.
- Depending on the type of final mounting required, i.e. 19” rack-mounting, or various forms of panel mounting, additional equipment is required.
- On request the 15 kV pilot-wire transformer, can be mounted on an apparatus plate or in a suitable casing.

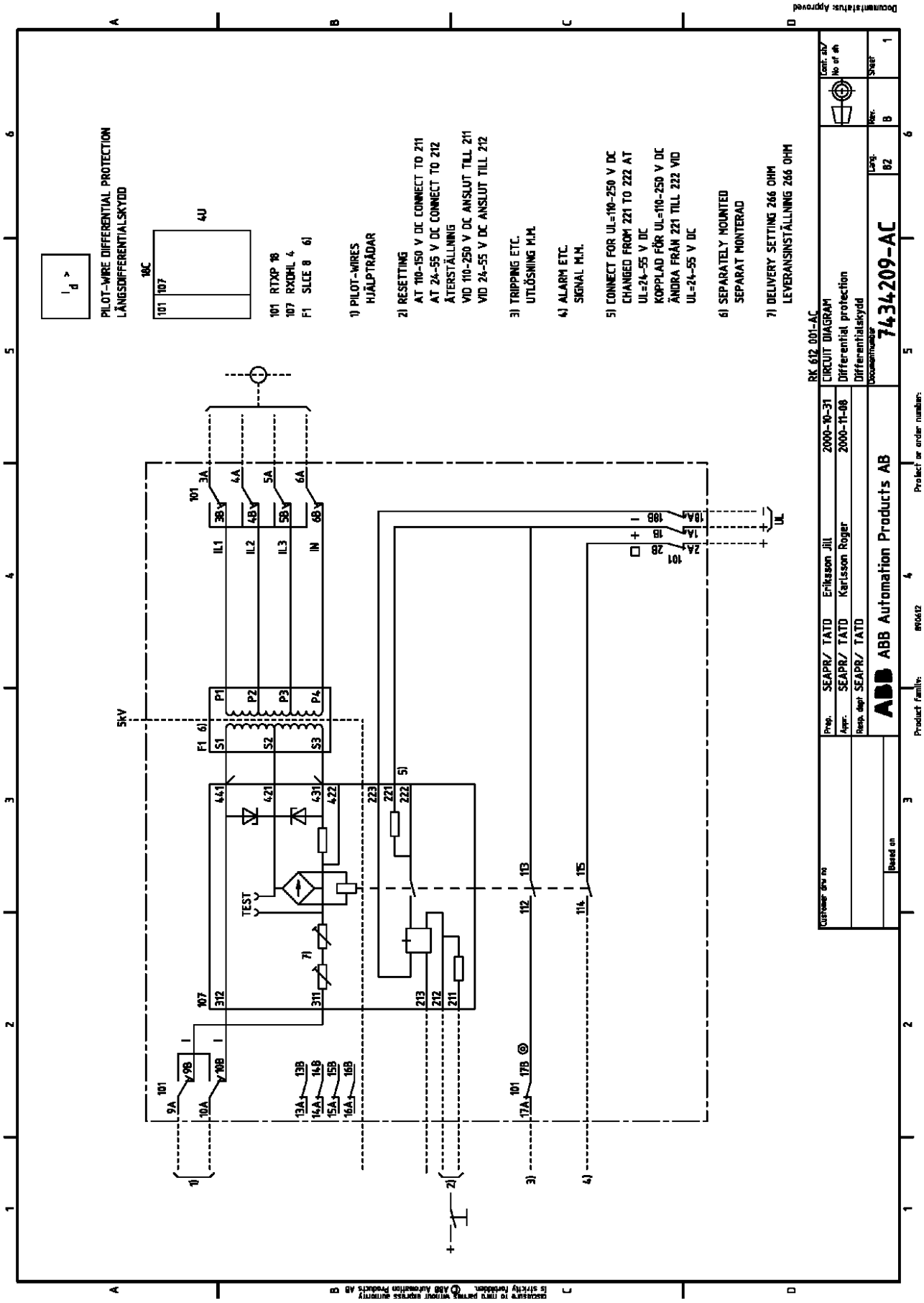
PILOT-WIRE DIFFERENTIAL PROTECTION
LÅNGSDIFFERENTIALSKYDD
101 RTXP 18
107 RXDHL 4
F1 SLCE 8 6)
1) PILOT-WIRES
HJÄLPTRÅDAR
2) RESETTING
AT 110-150 V DC CONNECT TO 211
AT 24-55 V DC CONNECT TO 212
ÅTERSTÄLLNING
VID 110-250 V DC ANSLUT TILL 211
VID 24-55 V DC ANSLUT TILL 212
3) TRIPPING ETC.
UTLÖSNING M.M.
4) ALARM ETC.
SIGNAL M.M.
5) CONNECT FOR UL=110-250 V DC
CHANGED FROM 221 TO 222 AT
UL=24-55 V DC
KOPPLAD FÖR UL=110-250 V DC
ÄNDRA FRÅN 221 TILL 222 VID
UL=24-55 V DC
6) SEPARATELY MOUNTED
SEPARAT MONTERAD
7) DELIVERY SETTING 266 OHM
LEVERANSINSTÄLLNING 266 OHM
RK 612 001-AC
CIRCUIT DIAGRAM
Differential protection
Differentialskydd
7434209-AC
ABB Automation Products AB
Prep. SEAPR/ TATD Eriksson Jill 2000-10-31
Appr. SEAPR/ TATD Karlsson Roger 2000-11-08
Resp. dept SEAPR/ TATD
Lang. B2
Kopv. B
Sheet 1
Cont. sh/ No of sh
Customer drw no
Based on
Product Family:
Project or order number:
Documentation approved
5kV
TEST
IL1
IL2
IL3
IN
UL

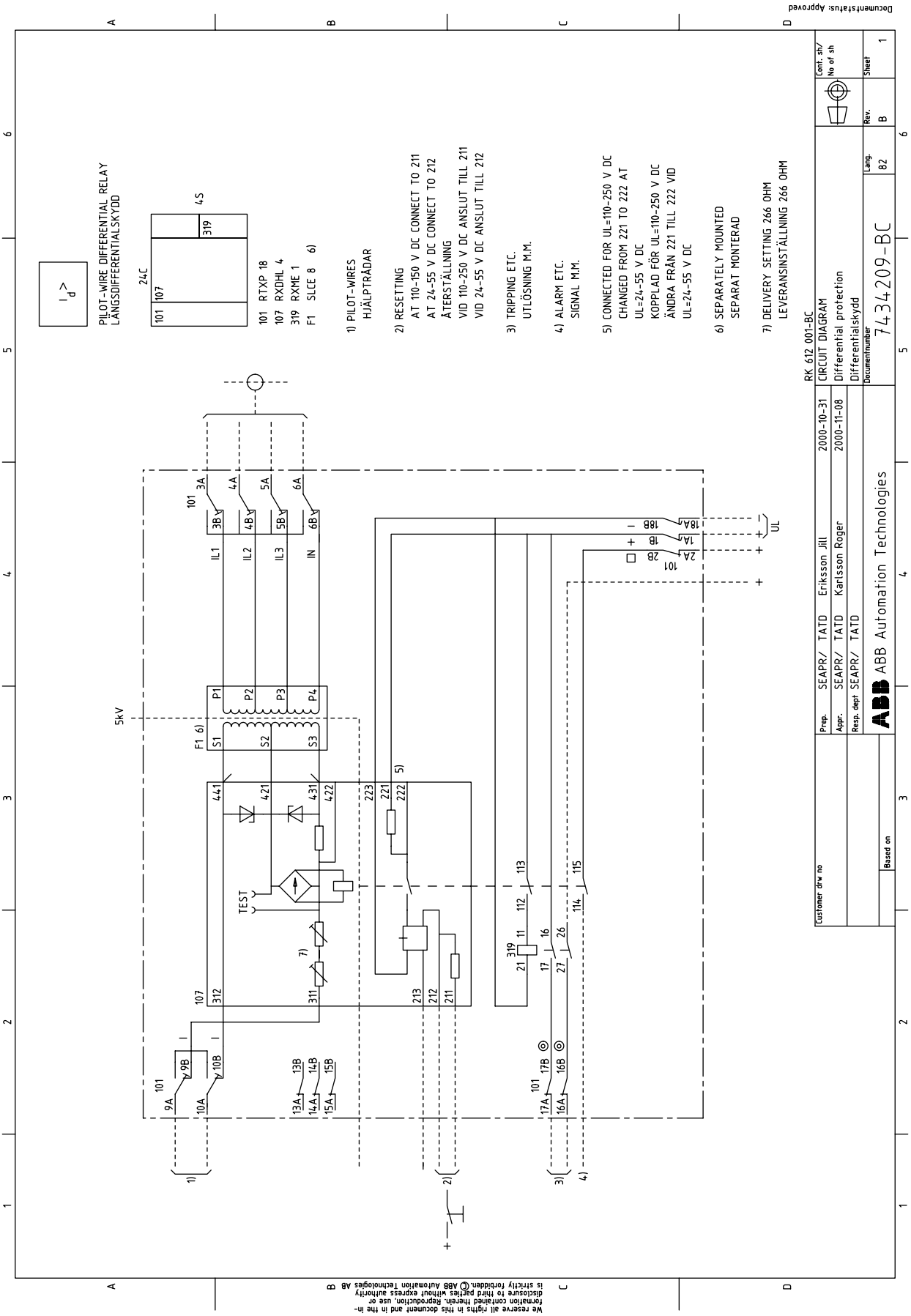
Documentstatus: Approved
PILOT-WIRE DIFFERENTIAL RELAY
LÄNGSDIFFERENTIALSKYDD
101 RTXP 18
107 RXDHL 4
319 RXME 1
F1 SLCE 8 6)
1) PILOT-WIRES
HJÄLPTRÅDAR
2) RESETTING
AT 110-150 V DC CONNECT TO 211
AT 24-55 V DC CONNECT TO 212
ÅTERSTÄLLNING
VID 110-250 V DC ANSLUT TILL 211
VID 24-55 V DC ANSLUT TILL 212
3) TRIPPING ETC.
UTLÖSNING M.M.
4) ALARM ETC.
SIGNAL M.M.
5) CONNECTED FOR UL=110-250 V DC
CHANGED FROM 221 TO 222 AT
UL=24-55 V DC
KOPPLAD FÖR UL=110-250 V DC
ÄNDRA FRÅN 221 TILL 222 VID
UL=24-55 V DC
6) SEPARATELY MOUNTED
SEPARAT MONTERAD
7) DELIVERY SETTING 266 OHM
LEVERANSINSTÄLLNING 266 OHM
RK 612 001-BC
CIRCUIT DIAGRAM
Differential protection
Differentialskydd
Prep. SEAPR/ TATD Eriksson Jill 2000-10-31
Appr. SEAPR/ TATD Karlsson Roger 2000-11-08
Resp. dept SEAPR/ TATD
ABB Automation Technologies
Documentnumber 7434209-BC
Lang. 82
Rev. B
Sheet 1
Cont. sh/ No of sh
Customer drw no
Based on
5kV
TEST
IL1
IL2
IL3
IN
UL
We reserve all rights in this document and in the information contained therein. Reproduction, use or disclosure to third parties without express authority is strictly forbidden. © ABB Automation Technologies AB

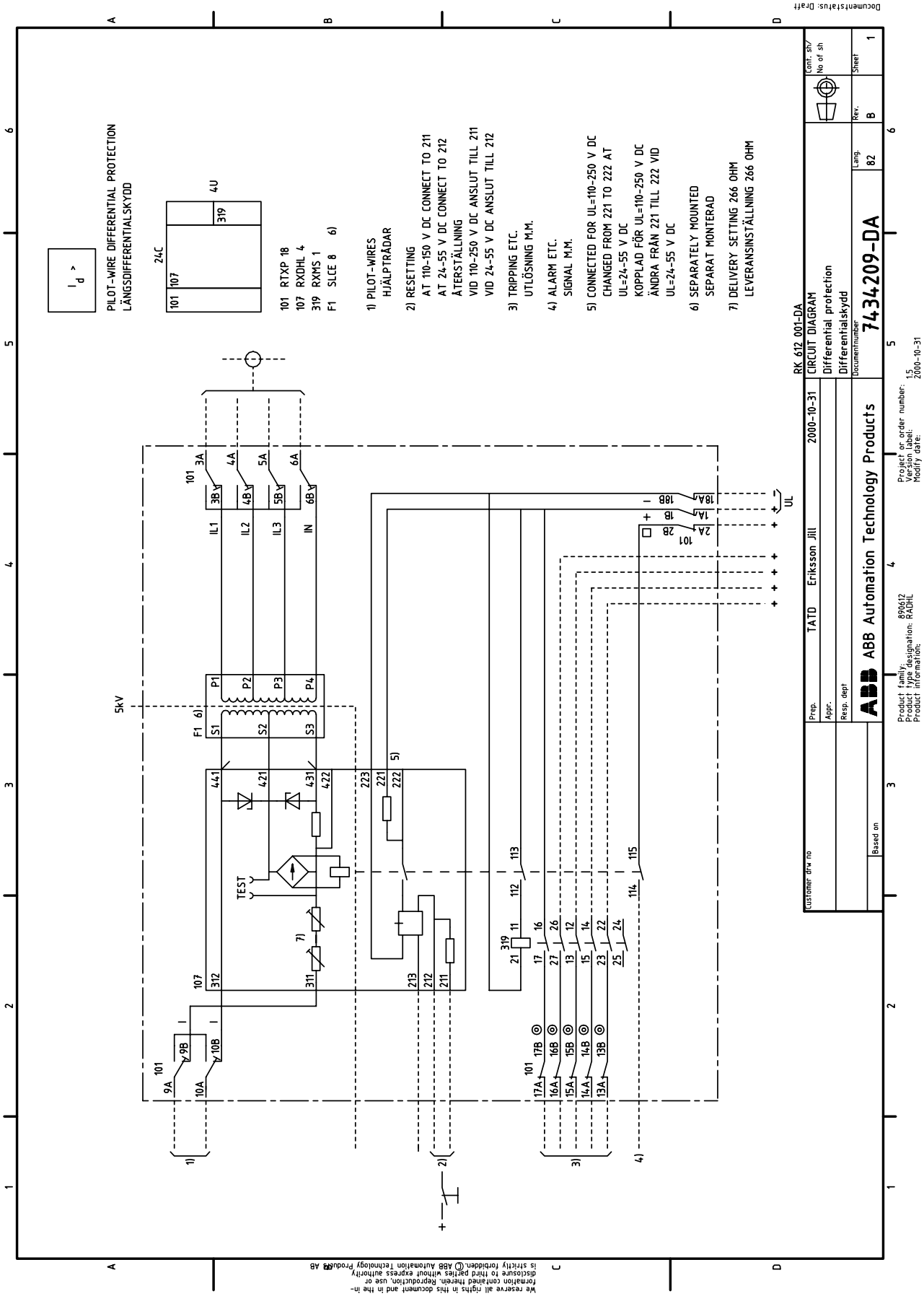

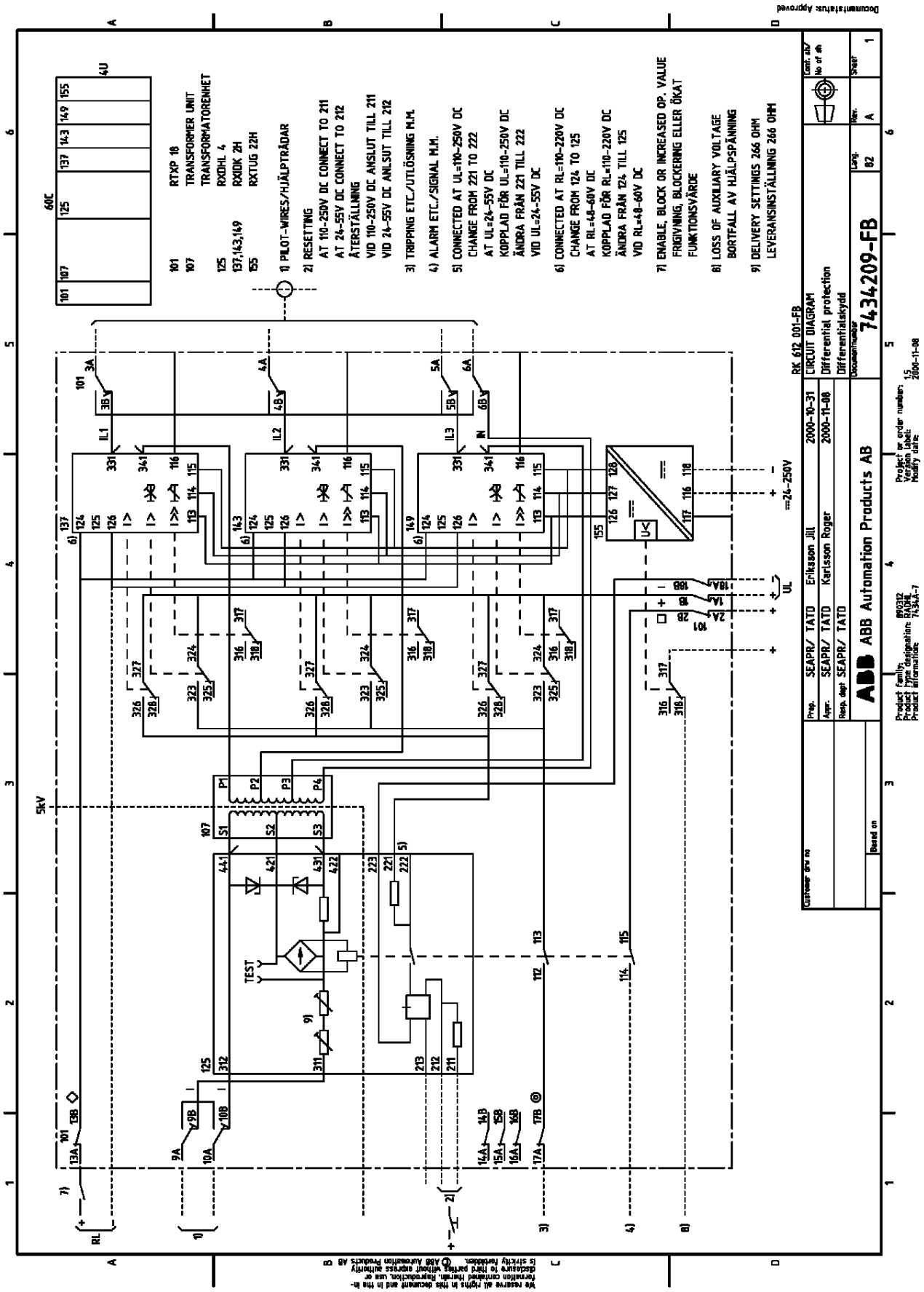

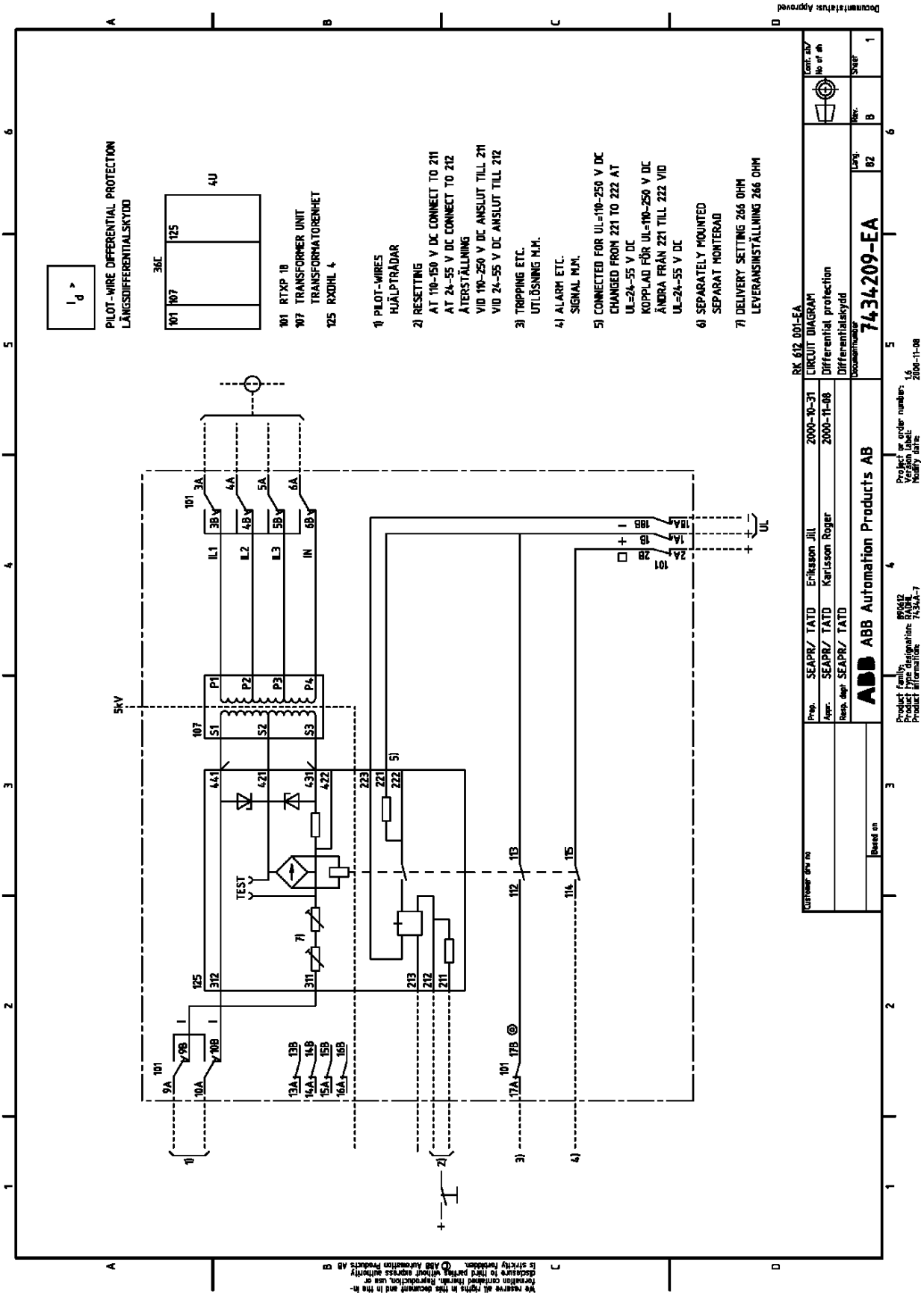
PILOT-WIRE DIFFERENTIAL PROTECTION
LÄNGSDIFFERENTIALSKYDD
101 RTXP 18
107 TRANSFORMER UNIT
TRANSFORMATORENHET
125 RXDHL 4
1) PILOT-WIRES
HJÄLPTRÅDAR
2) RESETTING
AT 110-150 V DC CONNECT TO 211
AT 24-55 V DC CONNECT TO 212
ÅTERSTÄLLNING
VID 110-250 V DC ANSLUT TILL 211
VID 24-55 V DC ANSLUT TILL 212
3) TRIPPING ETC.
UTLÖSNING M.M.
4) ALARM ETC.
SIGNAL M.M.
5) CONNECTED FOR UL=110-250 V DC
CHANGED FROM 221 TO 222 AT
UL=24-55 V DC
KOPPLAD FÖR UL=110-250 V DC
ÄNDRA FRÅN 221 TILL 222 VID
UL=24-55 V DC
6) SEPARATELY MOUNTED
SEPARAT MONTERAD
7) DELIVERY SETTING 266 OHM
LEVERANSINSTÄLLNING 266 OHM
RK 612 001-EA
CIRCUIT DIAGRAM
Differential protection
Differentialskydd
743209-EA
ABB Automation Products AB
SEAPR/ TATD
Eriksson Jill
2000-10-31
Karlsson Roger
2000-11-08
Product Family: RXDHL
Product Type Designation: RXDHL
Product Information: 743209-7
Project or order number:
Version label:
Modify date:
14
2000-11-08
Document status: Approved

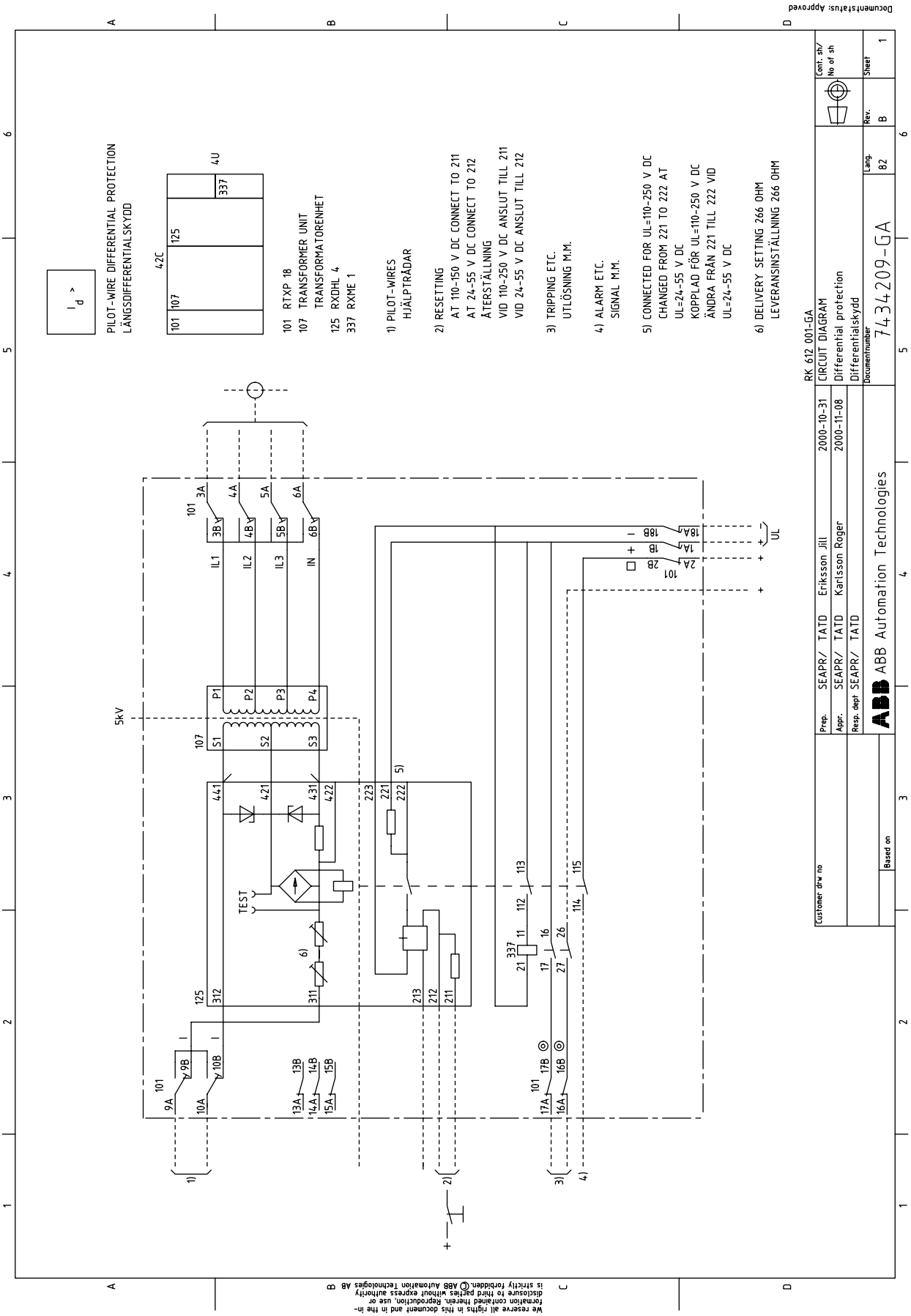

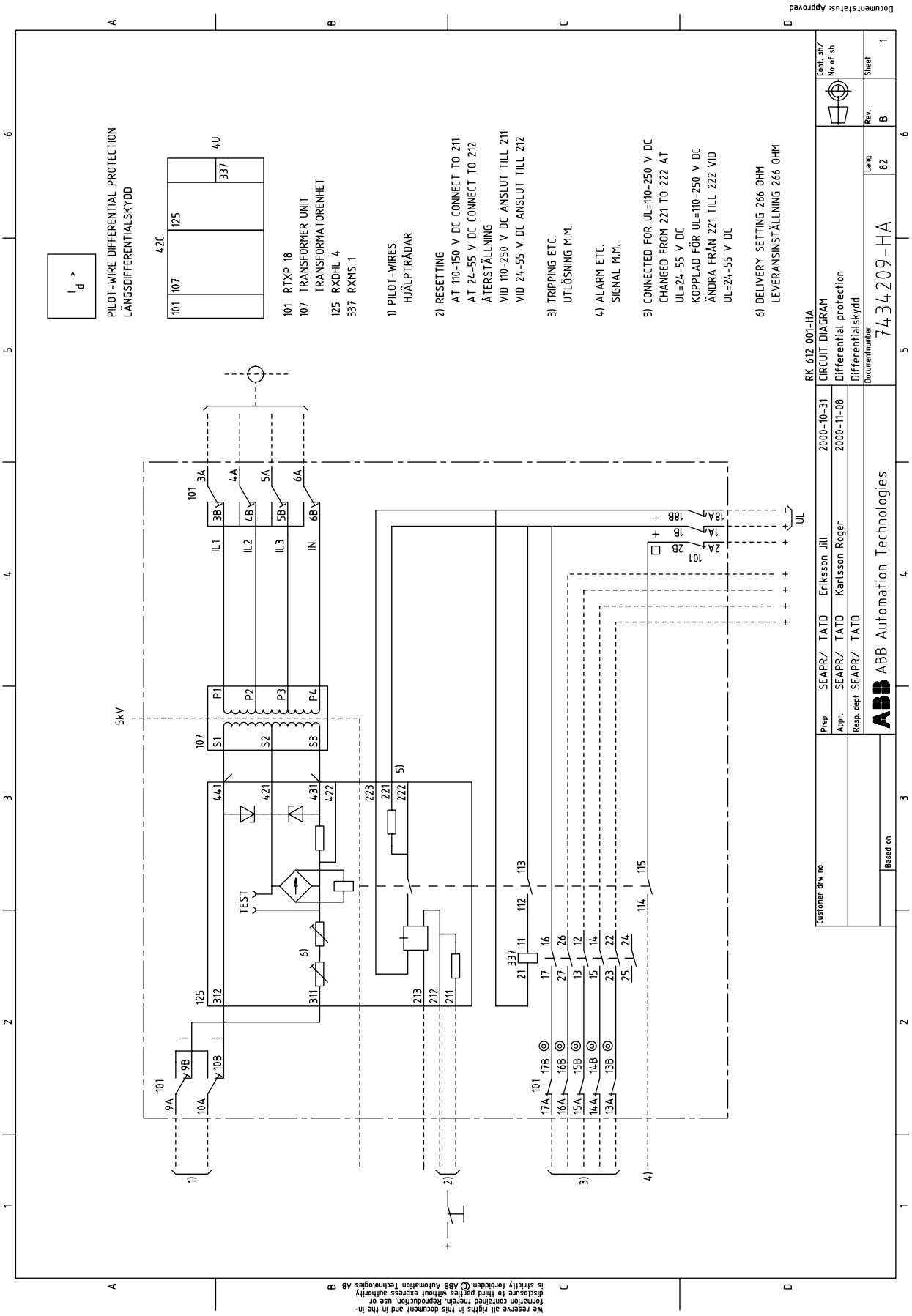

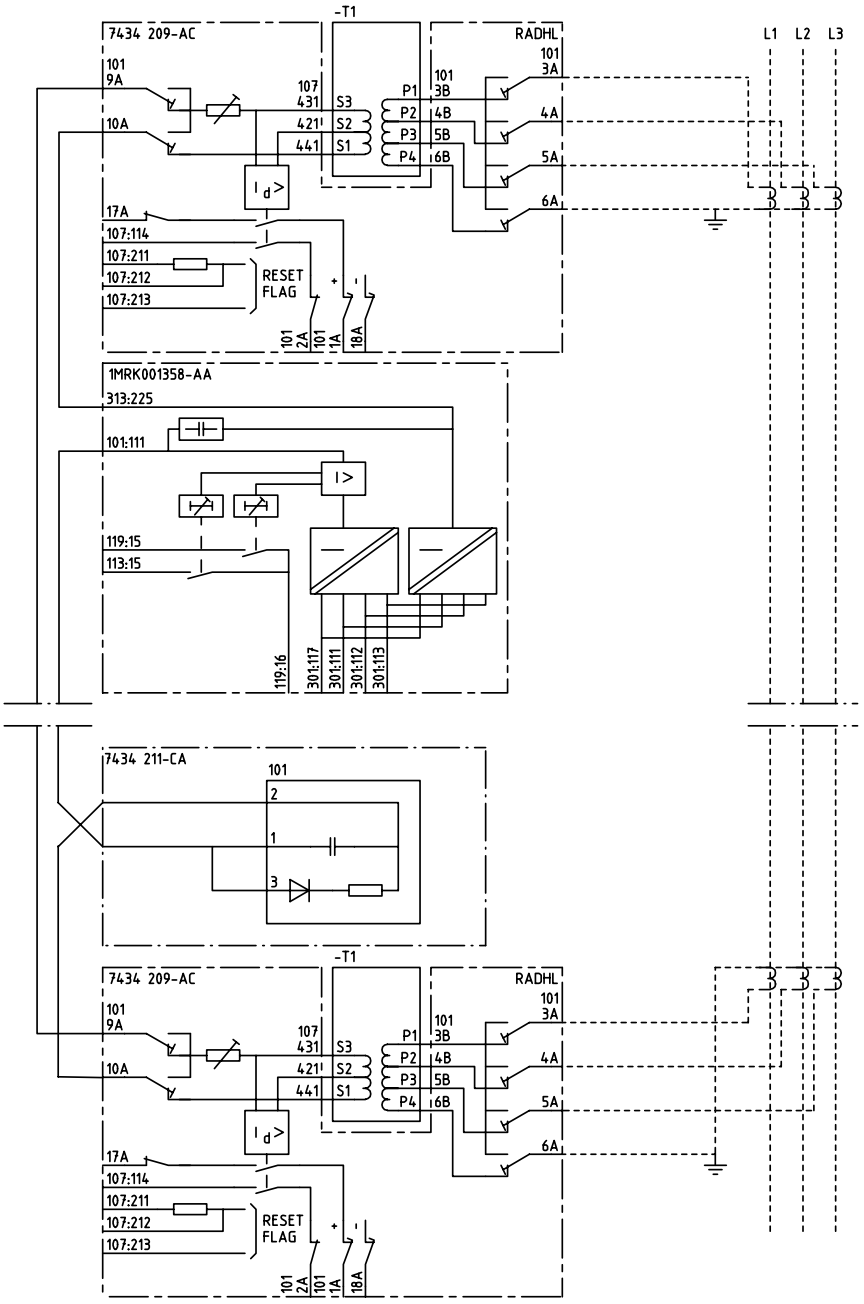

en03000067.vsd

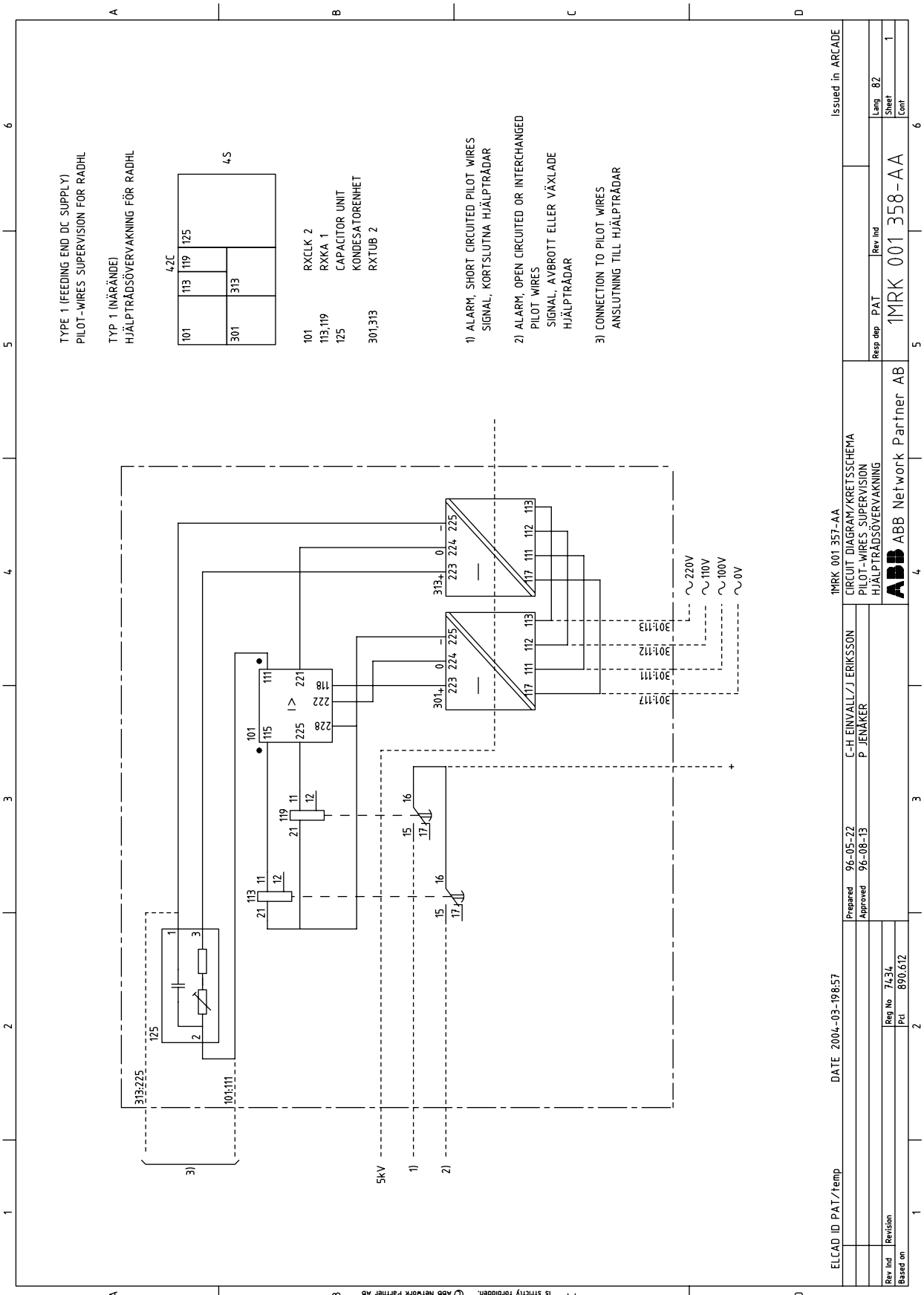

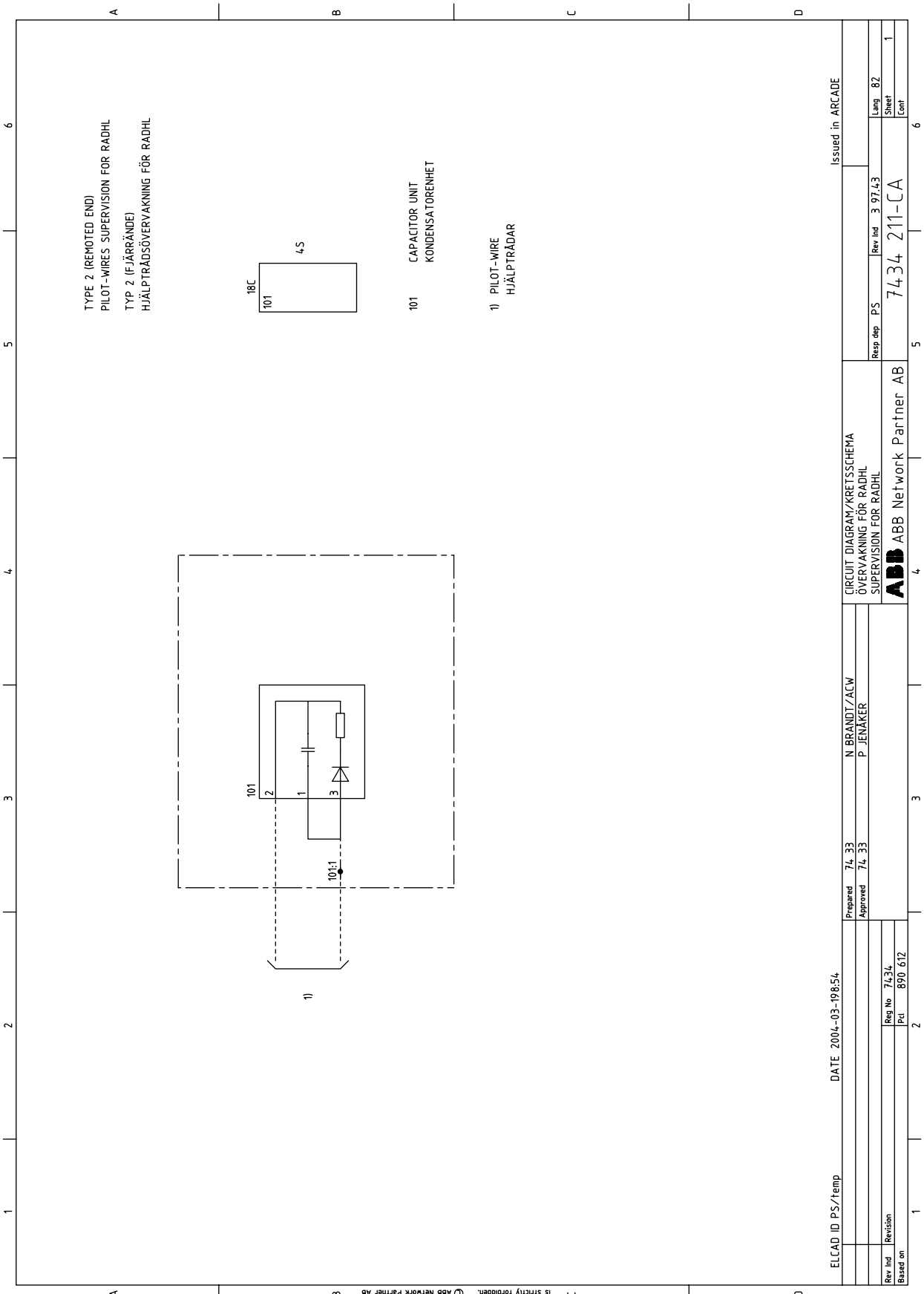

12 REFERENCE

RADHL Buyer's guide	1MRK 507 004-BEN
COMBIFLEX mounting hardware details	1MRK 513 003-BEN
COMBITEST test equipment details	1MRK 512 001-BEN
RXIDK 2H current moitoring relay	1MRK 509 002-BEN
RXHL 401 current monitoring relay	1MRK 509 062-BEN
RXHL 411 current monitoring relay	1MRK 509 049-BEN
RXME 1 intertrip auxiliary relay	1MRK 508 015-BEN
RXMS 1 intertrip auxiliary relay	1MRK 508 015-BEN

13 MANUFACTURER

ABB Automation Technologies AB
Substation Automation
SE-721 59 Västerås
Sweden
Telephone: +46 (0) 21 34 20 00
Facsimile: +46 (0) 21 14 69 18
www.abb.com/substationautomation