ABB

IB 7.6.1.7-7
Issue C

INSTRUCTIONS

High Impedance Differential Relay

CIRCUIT SHIELD ®

Type 87B

Catalog Series 419B

TABLE OF CONTENTS

INTRODUCTION

These instructions contain the information required to properly install, operate and test the ABB Type 87B high-impedance single phase differential relay.

The Type 87B relay is a high-speed or instantaneous differential voltage device intended primarily for bus differential protection. High current sensitivity also allows the relay to be used for differential protection of resistance grounded systems and machines or reactors.

The relay contains voltage-limiting resistors (varistors) which limit voltage across its input terminals to a safe value during system faults.

The relay is housed in a case suitable for conventional semi-flush panel mounting. The unit offers totally drawout construction with integral test facilities. Current transformer shorting is accomplished by a direct-acting spring and blade assembly upon removal of the relay from its case. Sequenced disconnects eliminate any possibility of nuisance tripping during withdrawal or insertion of the relay.

A target indicator is mounted on the front panel. The target is reset by means of a pushbutton extending through the relay cover. Control voltage must be present to reset the target.

Earlier models, catalog series 219B are covered in IB 7.6.1.7-5.

PRECAUTIONS

The following precautions should be taken when applying these relays:

1. Incorrect wiring may result in damage. Be sure wiring agrees with the connection diagram for the particular relay before the relay is energized. Be sure control power is applied in the correct polarity before applying.

2. Apply only the rated control voltage marked on the relay front panel. The proper polarity must be observed when the DC control power connections are made.

3. Do not apply high voltage tests to solid state relays. If a control wiring insulation test is required, withdraw the relay from the case before applying test voltage.

4. A lockout relay (e.g. type LOR, HEA, or WL) must be used to short circuit the input signal side of relay 87B upon operation of the differential circuit due to faults within the protected zone.

5. The entire circuit assembly of the relay is removable. The unit should insert smoothly. Do not use excessive force.

6. Follow test instructions to verify that relay is in proper working order. If a relay is found to be inoperative, return to factory for repair. Immediate replacement of the relay can be made available from the factory; identify by catalog and serial numbers. We suggest that a complete spare relay be ordered as a replacement, and the inoperative unit be repaired and retained as a spare.

7. **CAUTION:** *Since troubleshooting entails working with energized equipment, caution should be taken to avoid personal shock. Only competent technicians familiar with good safety practices should services these devices.*

PLACING THE RELAY INTO SERVICE

1. RECEIVING, HANDLING, STORAGE

Upon receipt of the relay (when not included as part of a switchboard) examine for shipping damage. If damage or loss is evident, file a claim at once and promptly notify Asea Brown Boveri. Use normal care in handling to avoid mechanical damage. Keep the relay clean and dry.

2. INSTALLATION

Mounting:

The outline dimensions and panel drilling and cutout information is given in Figure l.

Terminal and basic circuit identification will be found in Figure 2.

Connections:

A typical external connection diagram showing (3) Type 87B relays used for bus differential protection is shown in Figure 3.

Wiring and interconnections should be in accordance with instructions. Current transformer polarities MUST be as shown.

The relays have metal front panels which are connected through printed circuit board runs and connector wiring to a terminal at the rear of the relay case. The terminal is marked "G". In all applications this terminal should be wired to ground.

A lockout relay must be wired as shown in Figure 3.

DC must be connected in the proper polarity as shown in the diagram.

To obtain best sensitivities and facilitate lower pickup settings, the junction points of CT leads should he made equidistant from all CT's, or leads of equal resistance provided.

3. SETTINGS

VOLTAGE PICKUP:

75-400 Volts AC RMS, settable by means of a front panel switch at 75, 100, 150, 200, 250, 300, 350 or 400 volts.

TEST FEATURE:

A built-in test push button is provided for operational trip tests and mounted behind the removable front cover.
When using the built-in test switch, release the button as soon as the 87B operates. If the button is held in , the relay will continually repeat its trip and reset functions rapidly, and will appear to chatter.

RESET:

The relay does not require manual reset as it restores itself to functional status upon clearing of the faults and resetting of the lockout relay.

The operation indicator is of the memory type and can be reset after a fault or test without front cover removal.

TRIMMER:

A vernier marked pickup inside the relay on the upper printed circuit board allows fine calibration of pickup settings at selected switch positions.

4. Initial Check

After wiring is completed and checked, apply control power and reset the operation indicator. If the indicator cannot be reset, recheck connections, voltage and polarity. Do not attempt any other tests until wiring errors are corrected.

Verify ratio of current transformers. Check polarity at CT's and connections to the relays.

Exercise test push button to check proper operation of 87B and lockout relays.

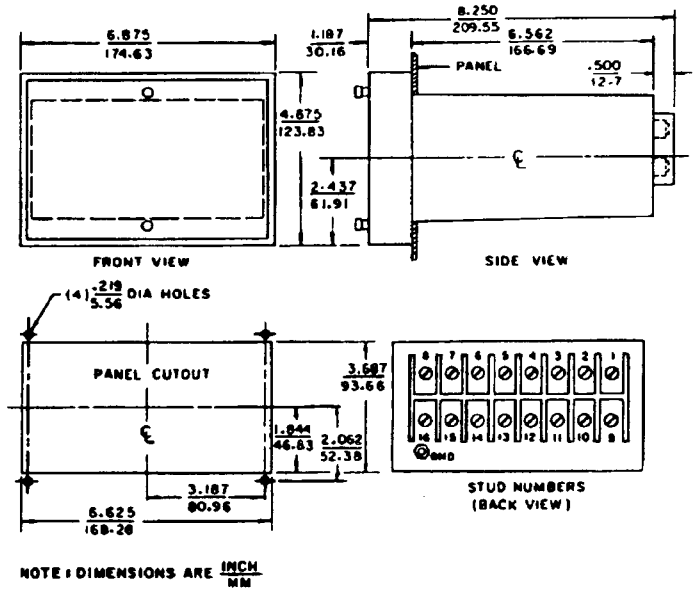

Figure 1: Relay Outline and Drilling

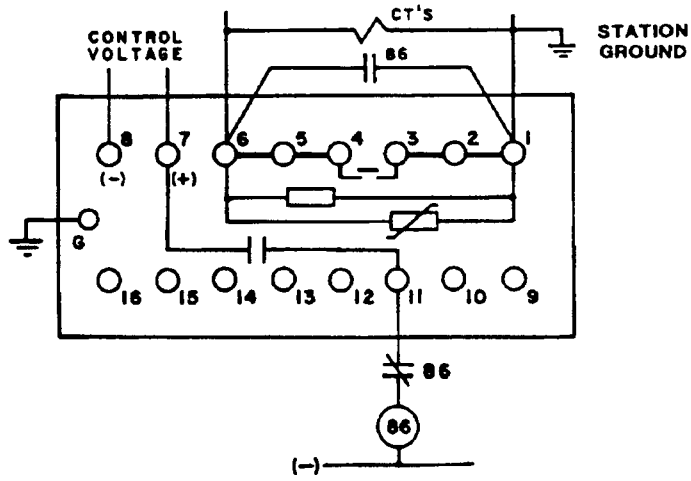

Figure 2: Basic Relay Connections 419B Series Units

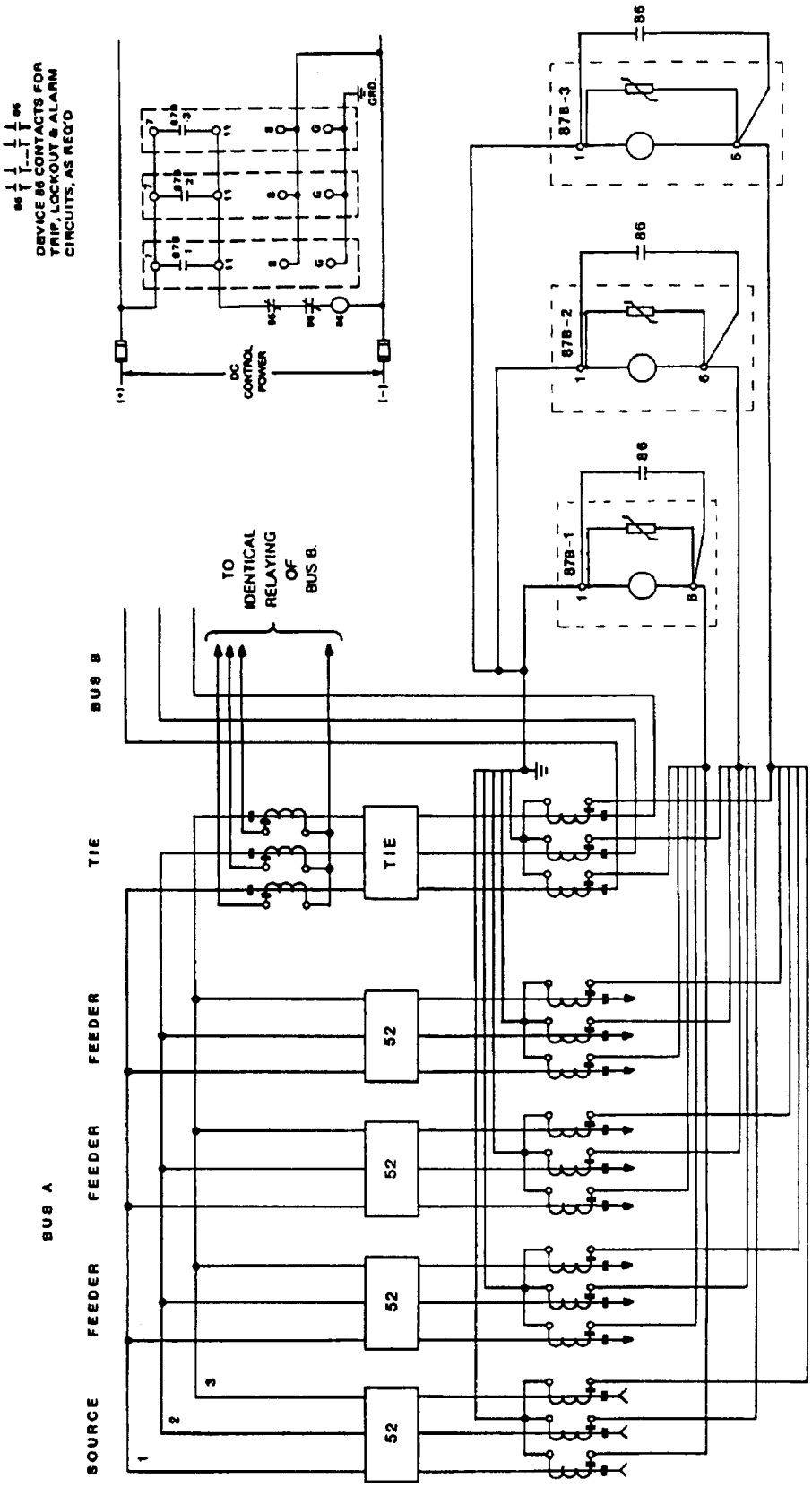

Figure 3: Typical External Connections, 87B High Impedance Bus Differential Relay, Catalog Series 419B, for Protection of Multiple Bus Sections with Bus Ties.

SPECIFICATIONS

Ratings: 75-400V RMS, 1500 Watt-seconds

Input Circuit

Table 1: Input Impedance and Sensitivity

Pickup Dial Setting V. RMS	Pickup Peak Volts (Sine)	Input Resistance (burden) Ohms ± 10%	Current Sensitivity (*) Pickup Current A. RMS ± 10%	Primary Amps 4000:5 CT	2000:5 CT	1200:5 CT
75	106.1	1430	0.05	40	20	12
100	141.4	1600	0.06	48	24	14
150	212.1	1820	0.08	64	32	19
200	282.8	1950	0.10	80	40	24
250	353.6	2050	0.12	96	48	29
300	424.3	2120	0.14	112	56	34
350	495	2170	0.16	128	64	38
400	565.7	2210	0.18	144	72	43

(*) System current values are listed for reference only and represent contribution of all power sources. Magnetizing current of CT's is not included.

Tolerance: Voltage Pickup: ± 5% of setting at 25°C.

Operating Time:

Total trip time: 23 – 40 milliseconds (includes 20 – 30 msec. time of the lockout relay and 3 – 10 msec. operating time of 87B relay).

Input Withstand:

150 Volts RMS continuous
400 Volts RMS for 5 minutes
1500 Wattsec. max. at voltage – limiting conditions (internal system faults).

Frequency: 25/50/60 Hz.

Voltage Limiting:

1200 – 1500 Volts instantaneous at input currents in excess of 0.5 – 1.0 ampere.

Dielectric: Input – to – output isolation: 7500V peak.

Control Power:

	models available for		Catalog Number
110 Vdc	+20% -50%	Drain – 8 ma (stand-by)	419B0002
175 Vdc	+20% – 50%	Drain – 8 ma (stand-by).	419B0012
220 Vdc	+20% – 50%	Drain – 8.5ma (stand-by).	419B0022
48 Vdc	+20% – 50%	Drain – 11ma (stand-by)	419B0032
125 Vdc	+20% – 50%	Drain – 9.2ma (stand-by).	419B0042
250 Vdc	+20% – 50%	Drain – 10ma (stand-by).	419B0052
32 Vdc	+20% – 50%	Drain – 12ma (stand-by).	419B0082
24 Vdc	+20% – 50%	Drain – 18ma (stand-by).	419B0092

Output Circuit Contact Rating at:

	125 vdc	250 vdc
Tripping	30 Amperes	30 Amperes
Continuous	5 Amperes	5 Amperes
Break	0.3 Amperes	0.1 Amperes

Transient Immunity: More than 3000V, 1Mhz. bursts at 60Hz repetition rate continuous.

Operating Temperature Range: Minus - 30 to + 70 degrees C.

UL Recognized: UL File No. E103204

PRINCIPLE OF OPERATION

The Type 87B differential relay contains solid-state circuits and offers high – speed and sensitive protection against faults within the protected zone of substations or equipment.

Its input presents a high impedance burden to current transformers (see table 1) for secondary differential currents below 0.5 amperes and corresponding burden voltages below 1000 volts peak. Leakage current through the relay varistors at these levels is negligible.

The voltage pickup setting is made by means of a switch and trimmer potentiometer in a voltage divider circuit. The relay responds to modified instantaneous voltage increase across its terminals above the set point during internal faults. The pickup voltage should be set above the moderate voltages which may occur under external or through – fault conditions due to unequal performance or saturation of CT's.

Filter and delay circuits are provided against system transients, RFI, and flux exchange between current transformers.

The relay is equipped with voltage-limiting power resistors (metal oxide varistors) to limit the input voltage to safe values during internal system faults. Input burden at heavy faults is in essence, a relatively high dc voltage in series with a resistance of a few ohms which practically does not impede the build up of CT summation currents. Hence, the relay absorbs instantaneous power in the order of kilowatts while responding to high currents and has assigned wattsecond limits. The energy delivered by current transformers depends on their saturation voltage (or VA rating), ratio, and fault current magnitude.

The Type 87B relay is primarily designed to operate a fast lockout relay which, in turn, short circuits the relay inputs and trips associated circuit breakers.

The input side of the relay is isolated from the output circuits by an optocoupler. The output side consists of a dry contact and associated clamping, delay, polarity and power supply circuits. A target is provided to give a permanent indication of relay system operation and is reset by means of the front panel push-button. The built-in test feature allows operational trip test of the Type 87B and lockout relay.

When a differential trip occurs, the output contact is driven closed for a minimum of 200 milliseconds (400 typical) then automatically resets. If trip level input is maintained, the relay will continue to cycle through the trip and reset functions.

APPLICATION

The Type 87B is a single-phase relay of the high-impedance high-speed type. It is used in well known differential circuits with standard current transformers. Typically, three type 87B relays and a lockout relay are required in standard configurations for bus differential protection against phase-to-phase and phase-to-ground faults. A properly set relay will discriminate between external (through feed) and internal system faults. The relay is a voltage actuated device but its pick-up sensitivity is proportional to current magnitudes during internal faults.

The voltage across the relay input is practically zero in symmetrical circuits during normal operation, hence the continuous input rating is of less importance. Moderate voltage may appear in the secondary circuits due to unequal performance or saturation of some CT's. However, these voltages will result in smaller differential currents (in percent) than in schemes with low impedance differential relays. Thus, high differential impedance (usually several orders of magnitude higher than the shunt impedance of saturated CT's) leaves current transformers force-coupled through their secondaries and allows better discrimination between faults.

Internal faults lead to summation of all infeed secondary currents in the relay with some shunting effect of idle CT secondaries. Relay voltage and current rise rapidly during heavy internal faults. The signal, while being voltage-limited by varistors, causes the relays to operate and self-protect the input of 87B relay until circuit breakers trip. All differential relays of high-impedance type have limited input current or energy ratings.

The described protection can be conveniently expanded to more CT's if breakers are added to the existing scheme.

The standard Type 87B relay does not contain restraining circuits. Applications which involve either lightning arresters (directly connected to the bus) or non-relayed capacitors with grounded mid-points or other equipment subject to high magnetizing inrush or non-canceled infeed should be referred to the factory.

Application of the Type 87B relay and calculation of proper settings require consideration of the above described properties of the scheme. In general and to provide optimum performance, attention is recommended to: proper selection of current transformers and wiring, voltage settings above voltages and transients expected under external fault or inrush conditions, sensitivity to internal faults, and relay withstand at maximum fault magnitudes.

For example, the following selection procedures can be adapted for a given bus differential protection scheme:

Voltage Settings – External Faults

The relay should be set above maximum secondary circuit voltage which will appear during external faults.

Assume that the CT of a faulted feeder or load breaker is completely saturated and one or more source CT's are forcing current through its secondary winding.

1. Identify ratio and location of CT's.

2. Obtain or calculate DC resistance of the secondary winding of the CT and two-way lead length from the junction point to the farthest CT. Correct resistance values to the highest ambient or operating temperature.

3. Obtain interrupting rating of the largest circuit breaker (symm. A RMS) referred to secondary side of CT's.

4. Product of this current and resistance sum obtained above is symmetrical AC RMS voltage.

5. To obtain minimum relay setting, multiply this value by a factor (e.g. 2.5) which will account for safe margins, DC offset, resistance tolerances and current transfer between CT's.

The voltage thus calculated represents the minimum safe setting of the relay. If the value is between set points, use the next higher pickup setting. Still higher settings will provide additional safety margins with some increase in detectable internal fault magnitude. In most cases, the voltage pickup of the 87B relay can be set above the saturation voltage rating (knee point) of CT's.

These conservative calculations can be refined to produce lower settings if the following or other practical conditions are considered:

Maximum fault current is usually lower than interrupting ratings. Faulted circuit CT's of standard design never saturate completely. Source CT's may enter saturation region. Phase-to-ground external fault currents in resistance grounded systems are relatively low, hence 3-phase fault currents and one-way lead resistance become the controlling factors. Junction points of leads may not be equidistant but closer to CT's of feeders which are subject to external faults.

Withstand – Internal Faults

The thermal withstand of the relay is controlled by internal dissipation limits. Energy depends on the speed of the differential and lockout relay operation, maximum available fault current, and CT saturation characteristics.

In general, the wattsecond rating of high impedance relays of any type should be checked against expected energy.

For convenience, one could use a simplified method as reflected in Table 2 that is based on limits of CT saturation voltages with respect to relay currents and a conservative total operating time of 40 milliseconds (from inception of the fault to closing instant of the lockout relay contacts).

Table 2 Typical Input Current and Energy Limits

Max relay Current (Symm RMS)	Current Transformers Max Satur.. Voltage	Current Transformers Minimum Ratio	Max system fault current (Symm RMS)	Max. relay Current (Symm RMS)	Current Transformers Max. Satur. Voltage	Current Transformers Minimum Ratio	Max. system fault current (Symm RMS)	Max relay Current (Symm RMS)	Current Transformers Max Satur. Voltage	Current Transformers Minimum Ratio	Max system fault current Symm RMS)
				170A	240V	1500:5 1200:5 800:5	50 KA 37.5 KA 25 KA	100A	350V	2500:5 2000:5 1500:5	50 KA 37.5 KA 25 KA
300A	170V	1000:5 800:5 500:5	50 KA 37.5 KA 25 KA	150A	260V	2000:5 1500:5 1000:5	50 KA 37.5 KA 25 KA	90A	360V	3000:5 2500:5 1500:5	50 KA 37.5 KA 25 KA
250A	200V	1000:5 800:5 500:5	50 KA 37.5 KA 25 KA	135A	280V	2000:5 1500:5 1000:5	50 KA 37. 5 KA 25 KA	75A	400V	4000:5 2500:5 2000:5	50 KA 37.5 KA 25 KA
220A	210V	1200:5 1000:5 600:5	50 KA 37.5 KA 25 KA	125A	290V	2000:5 1500:5 1000:5	50 KA 37.5 KA 25 KA	62A	440V	4000:5 3000:5 2000:5	50 KA 37.5 KA 25 KA
200A	220V	1500:5 1000:5 800:5	50 KA 37.5 KA 25 KA	110A	310V	2500:5 2000:5 1200:5	50 KA 37.5 KA 25 KA	40A	600V	(*) (*) 4000:5	50 KA 37.5 KA 25 KA

(*) CT's in this range are not widely available due to limited window area. Consult factory.

If the maximum fault current (in symmetrical RMS amperes) and the ratio are known, the selected saturation voltage of any CT should not be higher than indicated on the corresponding line. Conversely, the CT ratio should not be lower than one shown for corresponding values of the system fault current and CT saturation voltage. Intermediate values can be obtained by interpolation. Alternatively, the energy can be accurately calculated from the instantaneous product of secondary current and voltage pulses. One should bear in mind, however, that the total circuit is not linear during faults.

As an approximation, note that the relay input voltages are approaching square shape and currents triangular pulse form at high internal faults. Thus, the product of CT secondary RMS current (max. internal fault, symmetrical) and squared value of CT Saturation RMS voltage multiplied by a factor 30 X 10^{-6} is a measure of wattsecond energy per pulse that is absorbed by the relay. This value that is multiplied by the maximum expected number of pulses should be less than relay Wsec. rating. Note that pulses occur every half cycle and their number depends on the operating time of the lockout relay to the contact closing. Therefore, fast lockout relays are preferred.

Current Sensitivity - Internal Faults

Since the varistor current within the pickup range of the relay is negligible, minimum fault current to trip is controlled only by the relay burden current and the magnetizing currents of current transformers.

Obtain relay Current from Table 1 and add to the sum of magnetizing currents of all CT's in the circuit at selected pickup voltage (consult CT magnetizing curves).

If all CT's are identical, one could also check the approximate number of circuits or breakers, that can be connected to the relay at a desired current sensitivity and voltage setting. To obtain the number, subtract the relay current from the required fault current sensitivity and divide by the magnetizing current of one CT.

Current Transformers – Wiring

The relay is designed for use with dedicated CT's.

Toroidal or bushing type current transformers with low leakage impedance are preferred. All current transformers must be of the same ratio, and preferably, have the same relaying class rating (saturation voltage). Highest available CT tap is recommended to assure that the secondary winding is fully distributed around the core.

The best sensitivity will be obtained if CT lead resistances to the junction point are minimized and the junction is equidistant in lead length from all CT's.

There should be only one ground connection in the secondary connection. See Figure 3 on Page 5.

CT polarity and recommended connections should be observed. A lockout relay should be used as shown.

The user should select current transformers, wiring, and terminations that are capable of withstanding circuit voltages encountered during faults. If CT secondaries are additionally protected by gaps or varistors, their trigger or threshold voltage should not be less than 1600 – 2000 volts.

TESTING

1. MAINTENANCE AND RENEWAL PARTS

No routine maintenance is required on these relays. Follow test instructions to verify that the relay is in proper working order. We recommend that an inoperative relay be returned to the factory for repair; however, a schematic diagram is available on request for those who wish to attempt repairs.

Metal handles provide leverage to withdraw the relay assembly from the case. Removing or installing a drawout unit with the relay in service will not cause an undesired operation. The assembly is identified by the catalog number on the front panel and a serial number stamped on the bottom of the board.

Should separation of the upper and lower circuit boards be necessary, remove (2) screws that attach the left and right handle assemblies to the upper printed circuit board. and remove (2) screws that attach the bottom circuit board to the bracket on the back plane board. The lower board may then be withdrawn forward from the printed circuit connector. An 18 point extender board is available from the factory if access to the lower circuit board is required during testing or troubleshooting.

A test plug assembly, catalog number 400X0001 is available for use with the 419B series units. This device plugs into the relay case on the switchboard and allows access to all external circuits wired to the case. See Instruction Book IB 7.7.1.7-8 for details on the use of this device. Also see note on page 13.

2. HIGH POTENTIAL TESTS

High voltage insulation tests are not recommended for the relay circuits. The relay has been tested at the factory. If a control wiring insulation test is required, remove the drawout assembly from the case before applying test voltage. (Partial withdrawal to break all connectors is sufficient).

3. ACCEPTANCE TESTS

Relays are subjected to factory tests and calibration in accordance with established procedures.

Problems with differential relay systems are often attributed to improper connections of current transformers and associated circuitry.

IF PROBLEMS ARE EXPERIENCED ON INITIAL START-UP, BE SURE TO CHECK CT WIRING FOR PROPER POLARITY AND RATIO OF ALL CURRENT TRANSFORMERS. TEST ONE RELAY AT TIME.

A. Operational-Acceptance Test. Push-To-Test Button

Tests should be made on a de-energized main circuit. If tests are to be made on an energized circuit, be sure to take all necessary precautions.

When the test button is depressed, a fault condition is simulated and the relay's output will operate to trip the lockout relay and associated breakers. It is normal during this operational test, that the output relay will continuously open and close (operate, reset) as long as the test button is depressed. At the same time, the target will drop to indicate operation.

This simple test is often all that is required to verify that the relay is operational.

B. Bench Tests – Acceptance or Calibration

CAUTION: Since testing entails working with energized equipment, caution should be taken to avoid personal shock. Only competent technicians familiar with good safety practices should service these devices.

Test connections are readily made to the drawout relay unit by means of standard banana plugs. Current input connections are made to the vertical posts at the blade assemblies. Control power and output connections are made at the rear vertical printed circuit board. This rear board is marked for easier identification of the connection points.

A typical test circuit is shown in Figure 4. NOTE: A fast lockout relay (e.g. type HEA or LOR) must be used during bench testing to protect the relay from the damage that might occur due to errors in signal application.

If operating time tests are conducted, certain allowances should be made for variations in the trip time of lockout relays or readings should be averaged. Regulation or voltage drop of the signal source should be taken into account during measurements of the pickup or trip time.

Bench tests with high voltage and high current applied to the relay input from a high power voltage source are not recommended due to uncontrolled energy output. If such tests are contemplated, the test circuit should contain properly selected current transformers of allowable ratio and saturation voltage, and a lockout relay interconnected as in the contemplated differential scheme.

1. Connect relay drawout assembly as shown in Figure 4. Apply proper DC control voltage per relay rating.

2. Increase test voltage gradually until the 87B relay operates.
NOTE: The output relay will continuously open and close (operate, reset) during this test, however, not during actual in-service trips since the associated circuit breaker will open causing loss of system voltage to the 87B input circuit.
Read the voltage at the instant of operation (not later). If calibration adjustment is desired, rotate pickup trimmer on the upper printed circuit board. NOTE: The Type 87B relay has a continuous thermal rating of 150VAC RMS. Calibration at higher voltages should be conducted within a short period of time with 3 – 5 minute intervals between tests to allow proper cooling. Do not apply test voltages in excess of 600V RMS unless the power input is limited to 1500 Wsec and a lockout relay operates properly to self-protect relay 87B.

3. Signal application time can be reduced and a better readout of the voltage can be obtained if the voltmeter is connected as shown by the dotted line(See Figure 4). Preset the voltage at higher than pickup value and close the external switch causing the relay to trip. Reduce the voltage gradually until relay 87B does not trip. Read the voltage and remove the signal at once.

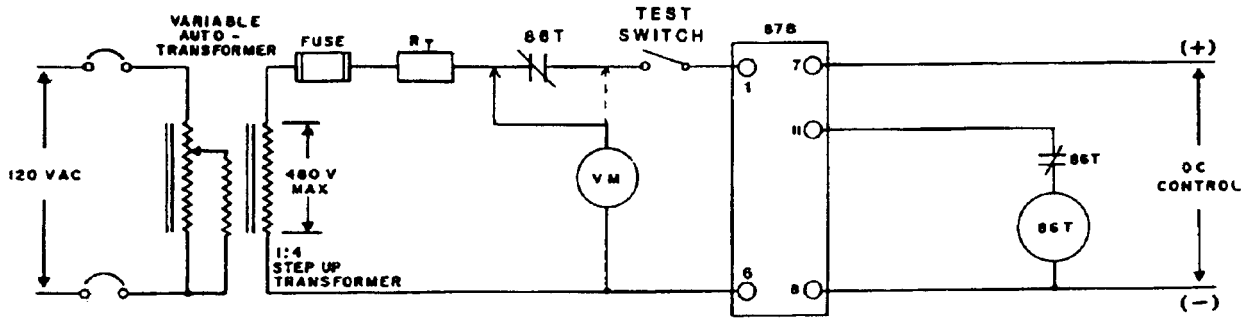

Figure 4: Test circuit - bench tests of drawout unit

Note on the use of the MT-XC Test Plug - Catalog No. 400X0001

When using the test plug in the Type 87B relay case , access to the external CT circuit is obtained at any of the three current circuit shorting switches. In other words , the CT shorting switches are in series in the CT secondary circuit.

OBSOLETE RELAYS

419B00X4 Series Units

The Type 87B relay (419B series) with catalog numbers ending with the digit "4" have been obsoleted and superseded by catalog numbers ending with the digit "2". The obsoleted models have been internally modified by the replacement of the Thyristor (SCR) output device to a contact output. The relay has been internally connected as to mimic the operating characteristics of the SCR. The operating times, output ratings , and external wiring have not been altered by this modification.

219B00X4 Series Units

Type 87B relays of catalog series 219B are obsolete and have been superseded by catalog series 419B. Both series are functionally equivalent; however, the 219B series was of non-drawout construction.

In the event that a 219B series unit is to be replaced with a 419B series unit the following applies:

1. The entire case assembly must be replaced. *(Be sure to de-energize all equipment and short current-transformer secondaries before disconnecting any wires.)* The 419B case assembly will mount in the same panel cutout as the 219B series unit.

2. The connections are not the same. The following chart is provided as a guide to rewiring. See Figure 2, page 4 for the external connections for the 419B series units. The internal connections for the 219B series units are shown below for reference.

Wire on 219B unit terminal number	Moves to	Terminal on 419B unit
1	——>	1
2	——>	1
4	——>	6
7	——>	7
8	——>	8
11	——>	11
G	——>	G

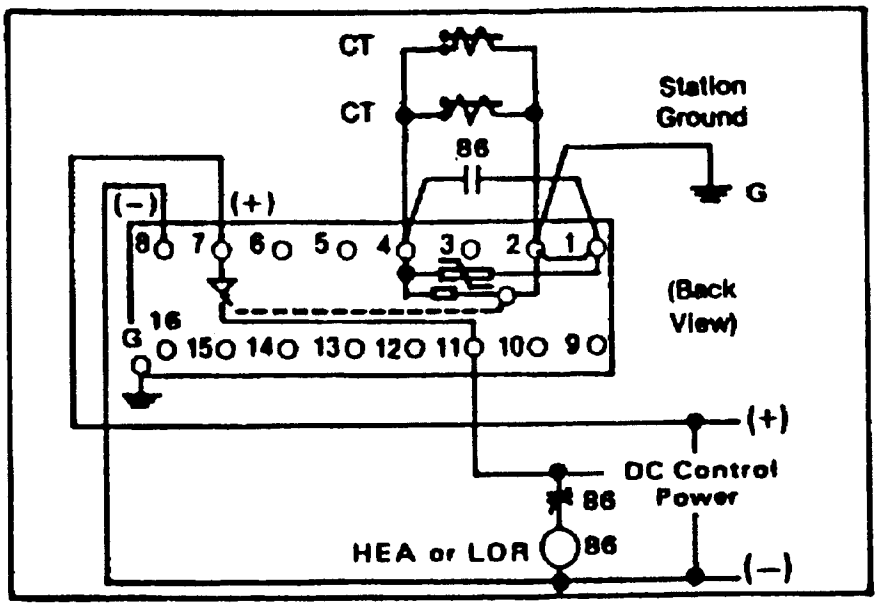

Typical Connections for 219B Series Units – For Reference Only

OTHER APPLICATIONS

The following diagram shows the typical connections of the Type 87B high-impedance relay in a scheme that provides ground fault protection for transformer or generator windings. This arrangement is sometimes referred to as "restricted earth-fault Protection". The scheme provides sensitive ground-fault detection for its zone of protection, and is stable for faults outside the zone. All four ct's must have the same ratio, and be dedicated to the 87B relay.