FACTS

Multiple SVC installations for traction load balancing in Central Queensland

During 1987, ABB installed a total of nine Static Var Compensators (SVC) for Powerlink of Australia in their 132 kV grid feeding power to an extensive railway network for coal haulage located in east Central Queensland. The purpose of these installations is to achieve dynamic load balancing for symmetrizing purposes as seen from the 132 kV network.

The nine compensators have an overall dynamic rating of more than 600 Mvar, making this installation the most comprehensive of its kind in the world. Together with the SVCs, a total of 28 single-phase harmonic filters were supplied as well, for the purpose of filtering of harmonics generated by the thyristor drives of coal hauling locomotives.

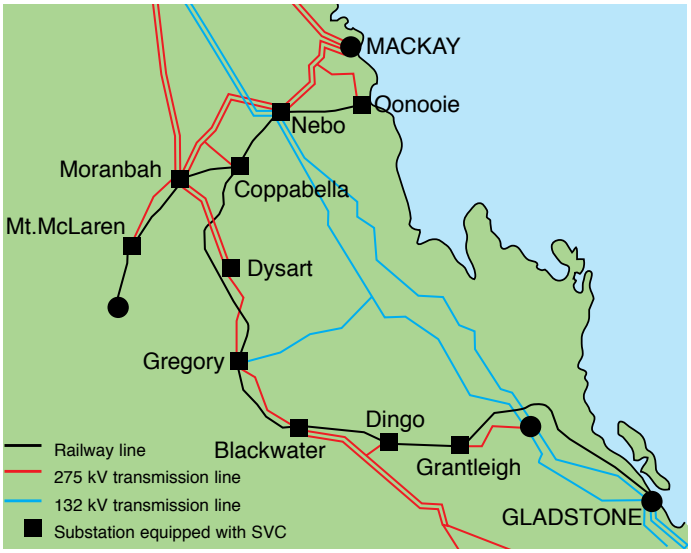

Fig 1. Compensator substations in Central Queensland

Background

The Queensland Government is carrying out the electrification of coal haulage routes in Central Queensland. Electricity is supplied at 132 kV from Powerlink´s transmission network in the area. The traction system is supplied from single-phase 132/50 kV transformers at each of thirteen supply substations, to provide a 25 kV catenary voltage from 50/25 kV autotransformers at intervals along the track. The traction loads are single-phase with time dependent characteristics and are scattered over long distances. The 132 kV short circuit levels at the supply points may be below 300 MVA while traction loads may reach short duration peaks of 20 MVA to 40 MVA. This would result in unacceptable negative-phase sequence currents and voltages in the power system if no countermeasures were taken.

Studies determined that SVCs were required at nine substations in the transmission network supplying the railways. The SVCs are required to balance the single-phase traction load and to provide voltage regulation for the power system. Fig.1 shows the coal haulage railway lines and the locations of relevant substations.

A tenth SVC rated at 340 Mvar was commissioned in 1987 at Nebo 275/132 kV substation to compensate for the effects of unbalanced phase loading at one of the supply points as well as provide voltage support for the main 275 kV network.

What the SVCs achieve

The nine SVCs have the following (identical) tasks to perform in their respective parts of the network:

- Balancing of traction loads
- Power factor correction
- Reduction of composite negative-phase sequence voltages
- Dynamic voltage control

The compensators have been set to ensure that the overall negative-phase sequence voltage at the various points of common coupling does not exceed the following values:
0.7 % for half-hour maximum demands
1.0 % for five-minute peak loads
2.0 % for one-minute peak loads

Fig. 2 shows the impact of the SVCs on voltage balancing as well as voltage support of the 132 kV supply system.

SVC scheme

A typical traction substation arrangement is in accordance with Fig. 3. The SVC part mainly consists of a thyristor controlled reactor (TCR) operating in parallel with a capacitor bank configuration tuned basically to the 3rd and 5th harmonics. The SVC is connected to the 132 kV three-phase network through a step-down transformer.

To enable load balancing, each phase of the SVC is controlled individually by the SVC controllers. Each phase of the SVC has a certain control range going from inductive to capacitive in a stepless, continuous way. The TCR rating is determined by the highest inductive requirement per phase plus the necessary inductive reactive power for the bias of the capacitive requirement.

The thyristor valve of the TCR is water-cooled and consists of a number of thyristors in series. No parallel thyristors are used. The triggering system is of the magnetic firing type which supplies trigger pulses and triggering energy from ground potential without the need to obtain auxiliary power from the voltage across the thyristors. This firing system is very simple and reliable and is used in many SVC installations all over the world.

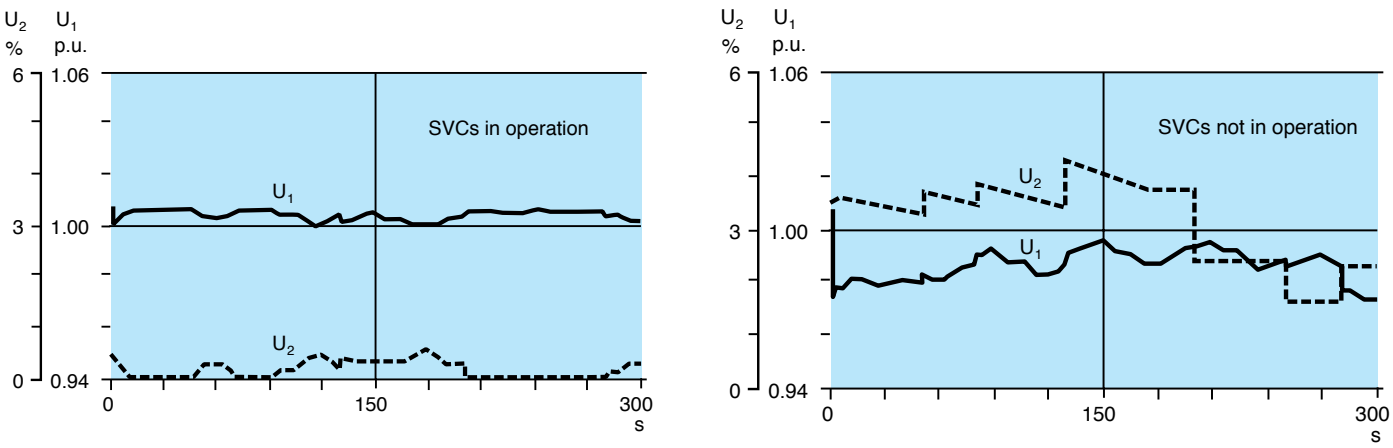

Fig. 2 Balancing by SVCs: U1 – Positive-phase sequence voltage. U2 – Negative-phase sequence voltage.

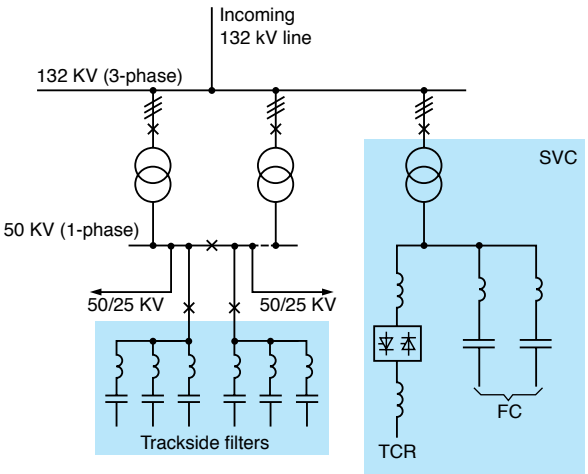

Fig. 3 Typical traction substation arrangement

SVC ratings

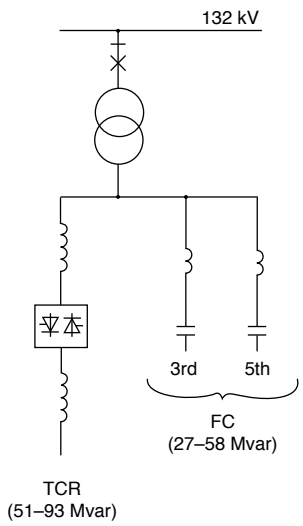

Ratings

The total rating of each SVC varies with its location along the line. Three standard ratings for the TCRs are utilized throughout: 51, 69 and 93 Mvar (three-phase). All in all, for the nine compensators, the dynamic range comprises more than 600 Mvar.

Compensator control

For balancing of asymmetries by means of an SVC, individual control of the phase-to-phase susceptances of the SVC must be used. The present SVCs are equipped with two parallel control systems. One is an open-loop load balancing control scheme and the other is a closed-loop voltage control scheme.

In the load balancing scheme, the reactive power consumption of the load is measured phase by phase. The power signals are then treated by the controllers in principle in accordance with the "Steinmetz" method for load balancing, please see below. This scheme provides very fast load balancing.

In the voltage control scheme, the phase-to-phase voltages are measured, whereupon the voltage signals are treated by the controllers in such a way that both reduction of negative-phase sequence voltage, optionally with a deadband, and control of the positive-phase sequence voltages are performed. This scheme will inherently reduce negative-phase sequence voltage also for example caused by untransposed lines.

Harmonic filters

In addition to the nine SVCs, a total of 28 single-phase trackside harmonic filters for 50 kV have been installed in the 13 substations along the line, tuned to the 3rd, 5th and 7th harmonics. Their purpose is to avoid that any substantial amounts of harmonics generated in the locomotive thyristor drives are injected into the 132 kV system.

The overall rating of the single-phase trackside filters amounts to nearly 250 Mvar at 50 kV.

The Steinmetz method for phase balancing

A load connected between two phases of a three-phase system can be brought to appear symmetrical and have unity power factor as seen from the three-phase system by applying reactive elements between the phases as shown in Fig. 4.

The "Steinmetz formula" relates the per phase reactive powers to a set of phase-to-phase reactive powers as follows:

$Q_{RS} = Q_R + Q_S - Q_T$

$Q_{ST} = Q_S + Q_T - Q_R$

$Q_{TR} = Q_T + Q_R - Q_S$

If the single-phase load consumes an active power P and a reactive power Q, it can be demonstrated that the reactive values needed between the phases for total three-phase symmetry and unity power factor are given by

$Q_{C1} = Q$

$Q_{C2} = P/\sqrt{3}$

$Q_L = P/\sqrt{3}$

In the case of comprehensive traction loads, the aggregate values of P and Q change substantially with time. By means of a TCR/FC scheme, the effective phase-to-phase susceptances are made variable in this case, thereby satisfying the above equations at all instances.

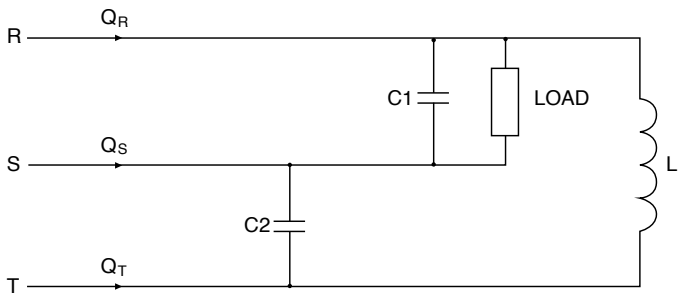

Fig. 4 Balancing unsymmetrical load

Oonooie SVC: 132 kV, -41/+52 Mvar

Technical data		
Controlled voltage		132 kV
Total rating of 9 SVCs	267 Mvar (inductive) to 345 Mvar (capacitive)	
Ratings of individual SVCs	15-51 Mvar (inductive) to 27-58 Mvar (capacitive)	
Control system	Fast open-loop single-phase reactive power control scheme for load balancing, plus closed-loop single-phase voltage control scheme for control of voltage	
Thyristor valves	Water cooled, with magneteic firing	
50 kV single-phase trackside filters:	Total rating of 13 locations	248 Mvar
	Total number of filters	28

For more information please contact:

ABB AB
FACTS
SE-721 64 Västerås, Sweden
Phone: +46 21 32 50 00
Fax: +46 21 32 48 10

www.abb.com/FACTS

Application Note A02-0134 E, 2011-03