Catalog | November 2012

Catalog 2012
FBP FieldBusPlug - Communicative Control and Protection Components

Power and productivity
for a better world™

FBP FieldBusPlug
Product group picture

FBP FieldBusPlug
Table of Contents

FBP FieldBusPlug

Product group picture 2
Table of Contents 3
System description, general information 4
Motor management, general information 5
Further FBP terminal devices 6
Motor management system UMC100-FBP and accessories 7
Ordering details - Universal Motor Controller UMC100-FBP 7
Expansion modules and accessories for Universal Motor Controller UMC100-FBP 8
Configuration software overview 9
Devices for extension of protection functions 10
Ethernet Modbus TCP Interface MTQ22-FBP 11
PROFIBUS DP FieldBusPlugs and other FBP terminal devices 13
Several Universal Motor Controllers on a PROFIBUS DP node 14
Application 14
Accessories for PROFIBUS DP bus connection 15
Accessories for PROFIBUS DP FieldBusPlug PDQ22-FBP 16
DeviceNet, CANopen® and Modbus-RTU FieldBusPlugs 17
DeviceNet, CANopen® and Modbus-RTU accessories 18
System accessories and documentation 19
Communicative motor starters with control functions 20
FBP terminal device data, overview 21
Techncial data - DX111, DX122 21
Techncial data - VI150, VI155 22
FBP FieldBusPlug 23
Dimensional drawings 23
Configuration examples for the integration of other terminal devices to the FieldBusPlug system 25
Configuration examples for the integration of Universal Motor Controllers into MCCs 29
Configuration examples for the integration of third-party terminal devices to the FieldBusPlug system 31
Notes 32

FBP FieldBusPlug
System description, general information

The FieldBusPlug system allows simple, universal and intelligent integration of numerous switching devices and components into any automation system. Simple and flexible planning and integration also has an effect on the design and operation of machines and systems.

Typical devices
These are intelligent motor controllers, softstarters, circuit breakers, switch disconnector fuses and decentralized automation systems.

Communication ínterface
The listed devices are fieldbus-neutral. With the FieldBusPlug (FBP) they can be connected to the most common fieldbus system. And with the new MTQ22 interface to Ethernet networks.

Reduces multiplicity of devices
One single device version can be connected to different fieldbus systems via suitable FieldBusPlugs. This simplifies planning, development, service and storage.

Operational safety
The M12 connection technology with ready-made components ensures easy assembly and high availability.

Large product portfolio
A comprehensive range of accessories, like cables, adapters, plugs and software tools rounds off the product range.

Simple integration
New tools based on the generally valid FDT / DTM (Device Type Manager) standard support planners and operators in configuring and implementing the systems.

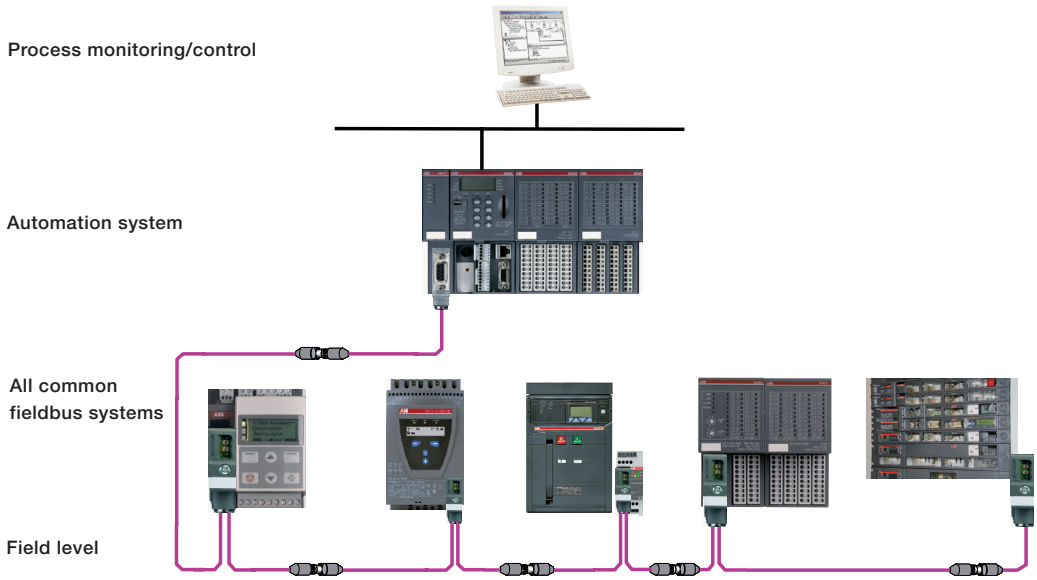

2CDC 341 046 F0003

FieldBusPlug

2CDC 343 009 F0009

Universal Motor Controller UMC100-FBP

1SFC 132 173 F0001

Softstarter PST

2CDC 351 026 F0006

Decentralized automation S500

2CDC 341 003 S0012

MTQ22

1SDC 200 077 R001

Circuit breaker Emax

FBP FieldBusPlug
Motor management, general information

With the Universal Motor Controller UMC100-FBP, ABB provides the optimum solution for integrating motor control into system control. The UMC100-FBP is a flexible, modularly expandable motor management system for low voltage motors with constant rotational speed. Its most important task is avoiding system downtimes through early detection of possible drive problems and reducing the associated downtimes through quick detection of the error cause if a motor stop has occurred.

Motor management and more

With its predefined control features and the option to optimally adapt the device to different system conditions due to its flexible logic, the UMC100-FBP is very well suited to varied applications. For complex applications with more I/Os or special signals, extension modules are available.

High system availability

The UMC100-FBP continuously provides extensive operating, service and diagnostic data of the motor. This enables the operator to detect faults in time or to even prevent these with suitable measures, or to limit their effect. Quick error location and elimination increases system availability.

Electronic full motor protection

The comprehensive electronic full motor protection is self-sufficient and guarantees full motor protection even if superordinated automation or process control systems or the bus system fail. The high accuracy of the electronic measuring system better utilizes the performance of the motors. The digital technology guarantees high long-term stability of the tripping characteristic and consistent tripping behavior even after many years of use.

Less planning, development and material effort

The UMC100-FBP already convinces during the planning and development phase due to its universal and modular structure. All required protection, monitoring and control features are integrated in one single device, which thus reduces the wiring effort. One single version for all current ranges and field buses simplifies planning and service from systems through to the spares inventory.

Simple integration in a confined space

Due to its compact design with integrated measuring system, the UMC100-FBP reduces the required floor space. This is important for application in low voltage drawer systems in conditions with limited space, or for conversion of existing systems to a modern motor management system.

Flexible integration into process control

With the FieldBusPlug, the UMC100 can communicate with control systems via the widespread standard fieldbus systems PROFIBUS DP, DeviceNet, CANopen or Modbus RTU.
The new interface MTQ22 enables Ethernet network communication via Modbus TCP. Allowing even network redundancy in an easy way.

Application in industrial plants

In large industrial systems it is quite common that several thousand motors are required to provide the required movement. This in turn requires intelligent devices on site, as well as a continuous connection from the process control and automation level through to the field. For this reason it is particularly important that motors can be easily integrated into system control and monitoring. With the FieldBusPlug system and the new UMC100-FBP motor management system, the best prerequisites are created for this. Intelligent motor management ensures high reliability in the process. The UMC100-FBP motor management system is easy to handle, from planning and implementation through to on-site service.

References worldwide

Due to the benefits it provides, the UMC100 is used worldwide in many segments and in projects with several thousand motor controllers

FBP FieldBusPlug
Further FBP terminal devices

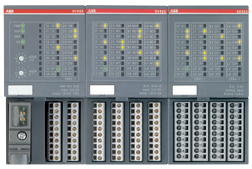

S500

Decentralized S500 I/O components

Interface module DC505 with fieldbus-neutral interface for connection to FieldBusPlug. Expandable with I/O modules of the AC500 automation system for decentralized automation concepts.
For technical details, please refer to:
www.abb.com > Low Voltage Products and Systems > Control Products > Programmable Logic Controllers PLCs

Tmax

Emax X1

Circuit breakers Tmax and Emax E1– E6 and X1

Circuit breakers can be integrated into any fieldbus systems via the FBP interface module EP010 for connection to FieldBusPlug.
For technical details, please refer to:
www.abb.com > Low Voltage Products and Systems > Circuit Breakers > Moulded Circuit Breakers (Tmax)
www.abb.com > Low Voltage Products and Systems > Circuit Breakers > Air Circuit Breakers (Emax)

PSR3...PSR16

Softstarter PST

Softstarters PSE/PSR/PST

PSE/PSR:
Compact device with fieldbus-neutral interface via external module (type PSR-FBPA) for connection to FieldBusPlug.
For technical details, please refer to:
www.abb.com > Low Voltage Products and Systems > Control Products > Softstarters > Softstarters

PST:
Softstarter with integrated fieldbus-neutral interface for connection to FieldBusPlug.
For technical details, please refer to:
www.abb.com > Low Voltage Products and Systems > Control Products > Softstarters > Softstarters

Switch disconnector fuse SlimLine XR

Switch disconnector fuse SlimLine XR

XR tier switch
with fieldbus-neutral interface for connection to FieldBusPlug.
For technical details, please refer to
www.abb.com > Fusegear > Switch Fuses Tier Type

Motor management system UMC100-FBP and accessories
Ordering details - Universal Motor Controller UMC100-FBP

UMC100-FBP

Description

Intelligent motor management system for three-phase motors with I_e = 0,24 - 63 A in one single device. Compact housing with integrated bushing-type current transformer for cable cross section up to 25 mm² (max. X with Insulation 11 mm). Higher currents with additional external current transformer. Thermal overload protection according to EN/IEC 60947-4-1, selectable trip classes 5E, 10E, 20E, 30E, 40E. (Some functions require the additional use of a voltage expansion module VI150 or VI155)

- Motor protection functions:
  Over-/Underload, Over-/Undercurrent, Over-/Undervoltage, rotor blocking Phase failure / imbalance / sequence
  Earth fault detection integrated or with external sensor CEM11
  Thermistor motor protection
- Motor control functions:
  Easily configurable motor control functions: direct, reverse, star-delta starter, pole-changing, overload relay, actuator mode. Additionally free progammable application specific logic with function blocks
- Service and diagnostic data:
  Operating hours, number of motor starts and overload trips
  Motorstatus, faults and warnings, fault history (16 events)
  Motor current, phase voltages, thermal load, power factor (cos φ), active power, apparent power, energy, total harmonic distortion (THD).
- Integrated I/Os: 6 digital inputs, 1 PTC input, 4 digital outputs. Maximum number of I/Os with expansion module: 14 digital inputs, 1 PTC input, 8 digital outputs, 1 analogue output,
- Interface for FieldBusPlug for communication via fieldbus systems, Interface for operator panel UMC100-PAN, Bus interface for connection of expansion modules
- UMC100 requires 24 V DC power supply.

Ordering details

Designation	Nominal motor current	Type	Order code	Price 1 pce	Weight (1 pce) kg (lb)
Universal Motor Controller	0.24 – 63 A	UMC100-FBP.0	1SAJ520000R0101		0.282 (0.622)
Universal Motor Controller, ATEX	0.24 – 63 A	UMC100-FBP.0	1SAJ520000R0201		0.282 (0.622)

UMC100-PAN

Operating panel UMC100-PAN and accessories for Universal Motor Controller UMC100-FBP

Operating, diagnostics and parameter setting panel for Universal Motor Controller UMC100-FBP. Setting of motor and bus parameters. Backlit graphical multilingual display. Assembly directly on UMC100-FBP or on the control cabinet door via extension cable and door mounting set IP65 (front side).

Ordering details

Designation	Type	Order code	Price 1 pce	Weight (1 pce) kg (lb)
Operating panel	UMC100-PAN	1SAJ590000R0102		0.040 (0.088)
3 m ext. cable with door mounting set	UMCPAN-CAB.300	1SAJ510002R0001		0.176 (0.388)
0.7 m ext. cable with door mounting set	UMCPAN-CAB.070	1SAJ510003R0001		0.700 (0.154)
1.5 m ext. cable with door mounting set	UMCPAN-CAB.150	1SAJ510004R0001		0.088 (0.194)

Motor management system UMC100-FBP and accessories
Expansion modules and accessories for Universal Motor Controller UMC100-FBP

2CDC 341 005 F0009

DX111-FBP

2CDC 341 004 F0009

DX122-FBP

2CDC 345 001 S0011

VI150-FBP

2CDC 345 002 S0011

VI155-FBP

Description

One I/O-expansion-module DX111 or DX122 and one voltage-expansion-module VI150 or VI155 can be connected to a UMC100. All expansion modules require 24 V DC power supply

DX111-FBP.0:
I/O-expansion module with 8 digital inputs 24 V DC, 4 relay outputs, 1 analog output 0/4…20 mA or 0…10 V

DX122-FBP.0:
I/O-expansion module with 8 digital inputs 110 / 230 V AC, 4 relay outputs, 1 analog output 0/4 - 0 mA or 0 - 10 V

VI150-FBP.0: Voltage expansion module for use in grounded networks, 150 – 690 V AC

VI155-FBP.0: Voltage expansion module for use in all networks, 150 – 690 V AC
Voltage modules for the determination of phase voltages, power factor (cos φ), apparent power, energy, total harmonic distortion (THD)

Ordering details

Designation	Type	Order code	Price 1 pce	Weight (1 pce) kg (lb)
I/O module for UMC100, 24 V DC digital input	DX111-FBP.0	1SAJ611000R0101		0.220 (0.485)
I/O module for UMC100, 110 – 230 V AC digital input	DX122-FBP.0	1SAJ622000R0101		0.220 (0.485)
3 phase Voltage module for grounded networks	VI150-FBP.0	1SAJ650000R0100		0.110 (0.243)
3 phase Voltage module for all networks	VI155-FBP.0	1SAJ655000R0100		0.110 (0.243)
Connection cable UMC100 - I/O module, length 0.30 m	UMCIO-CAB.030	1SAJ691000R0001		0.011 (0.024)
Connection cable IO-module - IO-module, length 0,30 m	IOIO-CAB.030	1SAJ692000R0001		0.011 (0.024)
Terminal set for UMC (spare parts)	UMCTB-FBP.0	1SAJ929160R0001		0.008 (0.018)

Configuration software overview
Ordering details

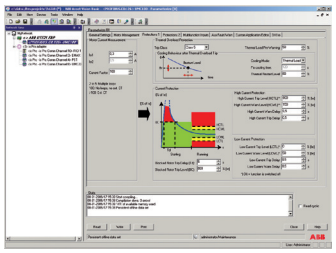

Configuration software for the UMC100-FBP motor management system
The software screwdriver for your application

Asset Vision Basic is an FDT frame application with a modern and simple graphical user interface. It provides effective basic functionality for configuration, diagnosis and maintenance of intelligent low voltage switching devices from ABB. Furthermore, due to the open FDT interface, other ABB and 3rd party DTMs can also be used.

Asset Vision Basic is the optimal tool for configuring FBP devices during commissioning, in the workshop or as second master in a PROFIBUS network of a process control system.

System requirements: Windows XP / Windows 7

Overview of features:

- Online/offline configuration and parameterization of devices
- Reading parameterization and configuration information from the device
- Online display of measuring and status data
- Online operation and error acknowledgement
- Creation of customer-specific logics
- Archiving

Connection to the device can either be via PROFIBUS (option 1) or as point to point connection directly to the device (option 2).

Ordering details - Configuration software (option 1): This option is recommended if the system comprises many devices.

Designation	Type	Order code	Price 1 pce	Weight (1 pce) kg (lb)
USB interface for PROFIBUS networks	UTP22-FBP	1SAJ924013R0001		0.261 (0.575)
PDP22/PDQ22 Device Type Manager (DTM) incl. FDT/DTM frame application	PBDTM-FBP	1SAJ924012R0004		0.062 (0.137)
PROFIBUS DP adapter cable Dsub9-M12 (optional, for use if Dsub9 connection is not available, e.g. on master or repeater)	PDA11-FBP.050	1SAJ924009R0005		0.113 (0.249)

UTP22-FBP (option 1)

Ordering details - Configuration software (option 2): This option is recommended if it is intended to use devices without a bus or if devices are connected to a DeviceNet, CANopen or Modbus bus.

Designation	Type	Order code	Price 1 pce	Weight (1 pce) kg (lb)
USB to FBP interface cable	UTF21-FBP	1SAJ929400R0002		0.100 (0.220)
PDP22/PDQ22 Device Type Manager (DTM) incl. FDT/DTM frame application	PBDTM-FBP	1SAJ924012R0004		0.062 (0.137)

UTF21-FBP (option 2)

Devices for extension of protection functions
Ordering details

CEM11-FBP

Earth fault monitors CEM11-FBP for use with Universal Motor Controller UMC100-FBP

Ordering details

Earth fault currents [mA]	Through-hole diameter	Type	Order code	Price 1 pce	Weight (1 pce) kg (lb)
80[1], 300, 550, 750, 1000, 1200, 1500, 1700	20 mm	CEM11-FBP.20	1SAJ929200R0020		0.130 (0.287)
100[1], 500, 1000, 1400, 2000, 2400, 3000, 3400	35 mm	CEM11-FBP.35	1SAJ929200R0035		0.200 (0.441)
120[1], 1000, 2000, 2800, 4000, 4800, 6000, 6800	60 mm	CEM11-FBP.60	1SAJ929200R0060		0.330 (0.728)
300[1], 2000, 4000, 5600, 8000, 9600, 12000, 13600	120 mm	CEM11-FBP.120	1SAJ929200R0120		0.940 (2.072)

[1] lower values have higher inaccuracy

CT4L185R/4, CT4L310R/4

CT5L500R/4, CT5L850R/4

Current transformers for use with Universal Motor Controller UMC100-FBP

Linear type transformers, 3-phase, with terminal block, for conductors Cu 2.5 mm2. For use with UMC100 and nominal motor currents >63 A

Ordering details

Designation	Recommended current range	Type	Order code	Price 1 pce	Weight (1 pce) kg (lb)
Current transformer	60…185 A AC	CT4L185R/4	1SAJ929500R0185		1.600 (3.527)
Current transformer	180…310 A AC	CT4L310R/4	1SAJ929500R0310		1.500 (3.307)
Current transformer	300…500 A AC	CT5L500R/4	1SAJ929501R0500		1.700 (3.748)
Current transformer	500…850 A AC	CT5L850R/4	1SAJ929501R0850		1.900 (4.189)

Ethernet Modbus TCP Interface MTQ22-FBP
Ordering details

MTQ22

- Ethernet connectivity for up to four UMC100
- Modbus TCP protocol
- Supports all network topologies
  - Star
  - Bus
  - Ring with redundancy (MRP protocol)
- No special Ethernet connectors requried in MCCs
- Easy to use in widthdrawable applications

Ordering details

Designation	Cable length	Type	Order code	Price Pkg	Pkg qty pieces	Weight (1 pce) kg (lb)
Ethernet Modbus TCP Interface	-	MTQ22-FBP.0	1SAJ260000R0100		1	0.200
Terminal bloc for MTQ22 X1…X4	-	ETHTB-FBP.4	1SAJ929200R0001		4	0.001
Terminal bloc for MTQ22 X1…X4	-	ETHTB-FBP.50	1SAJ929200R0002		50	0.001
Cable MTQ22 – UMC100	1.5 m	CDP17-FBP.150	1SAJ929170R0015		1	0.001
Cable MTQ22 – drawer outside	1.5 m	CDP18-FBP.150	1SAJ929180R0015		1	0.001
Cable UMC100 – drawer inside	1.0 m	CDP19-FBP.100	1SAJ929190R0010		1	0.001
Passive cable fixing bracket	-	CDP11-FBP.0	1SAJ929100R0001		50	0.010 (0.220)
Passive cable fixing bracket	-	CDP11-FBP.4	1SAJ929100R0004		4	0.010 (0.220)

UMC100-FBP , fix mounted application with solution MTQ22-FBP

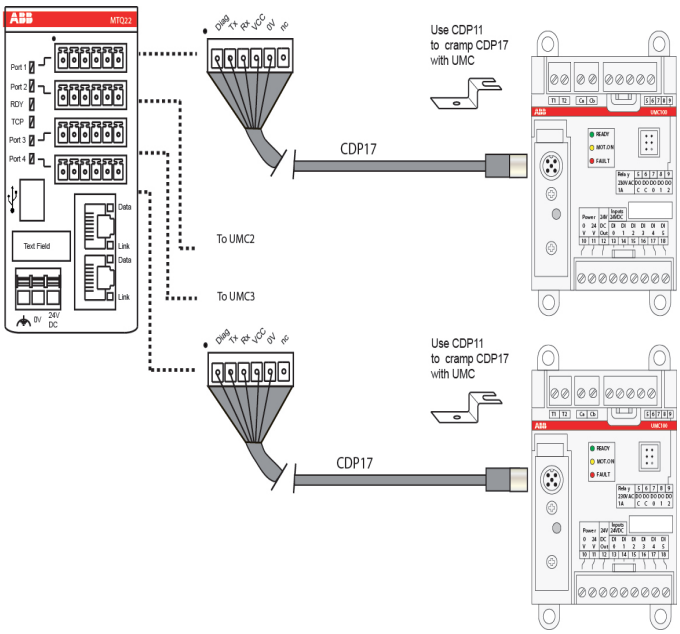

Ethernet Modbus TCP Interface MTQ22-FBP
Ordering details

UMC100-FBP, withdrawable application with MTQ22-FBP

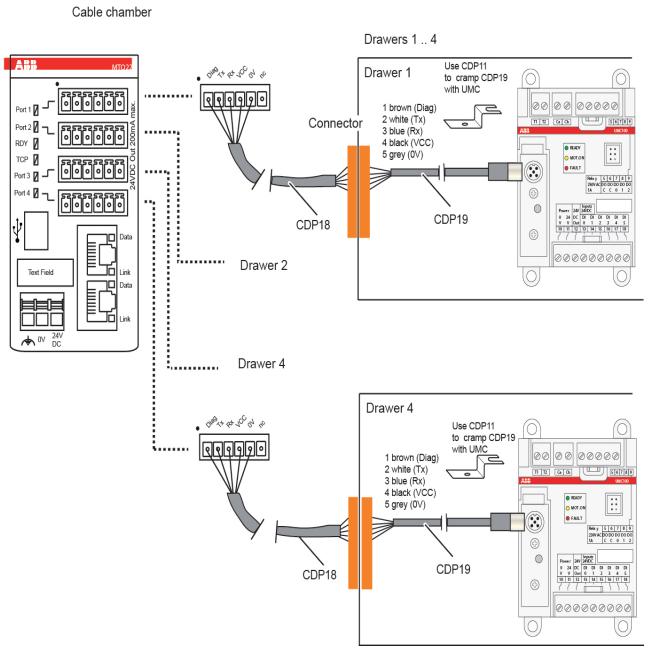

PROFIBUS DP FieldBusPlugs and other FBP terminal devices
Ordering details

Profibus DP FieldBusPlug

Ready-made PROFIBUS DP fieldbus interface with various cable lengths. Supports PROFIBUS DP V0 and V1.

- Data transfer rate up to 12 Mbit/s.
- Certified PROFIBUS subscriber.
- Degree of protection: IP65.
- Diagnostic LED.
- A-coded M12 plug.
- Approvals: CE, cUL (other approvals in preparation).

PDP22-FBP

Ordering details

Designation	Cable length	Type	Order code	Price 1 pce	Weight (1 pce) kg (lb)
Profibus DP FBP	0.25 m	PDP22-FBP.025	1SAJ240100R1003		0.090 (0.198)
Profibus DP FBP	0.50 m	PDP22-FBP.050	1SAJ240100R1005		0.100 (0.220)
Profibus DP FBP	1.00 m	PDP22-FBP.100	1SAJ240100R1010		0.130 (0.287)
Profibus DP FBP	2.00 m	PDP22-FBP.200	1SAJ240100R1020		0.200 (0.441)
Profibus DP FBP	5.00 m	PDP22-FBP.500	1SAJ240100R1050		0.360 (0.794)

PROFIBUS DP FieldBusPlug for 4 devices

The PDQ22 is a member of the ABB FieldBusPlug family of bus connectors. It allows the connection of up to four devices to PROFIBUS DP by just using one PROFIBUS node address.
This allows cost-efficient integration of devices that are located physically nearby.

- The PDQ22 supports: Universal Motor Controllers UMC100, softstarters PSR2-105 and I/O pads WDI and WDI/O.
- Degree of protection: IP65.
- Separate LEDs for device status and bus status indication.
- Approvals: CE, cUL (other approvals in preparation).

PDQ22-FBP

Ordering details

Designation	Type	Order code	Price 1 pce	Weight (1 pce) kg (lb)
Quadruple bus connector	PDQ22-FBP	1SAJ240200R0050		0.200 (0.441)

Several Universal Motor Controllers on a PROFIBUS DP node
Application

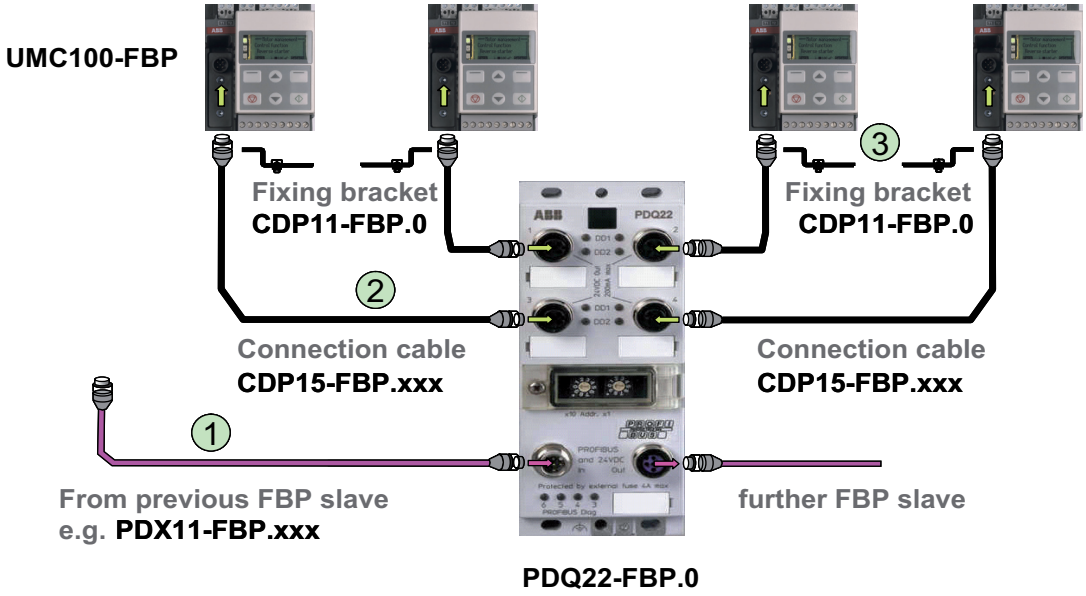

Several Universal Motor Controllers on a PROFIBUS DP node

Ordering details

Description	Type	Order code	Price 1 pce	Weight (1 pce) kg (lb)
(1) PROFIBUS DP extension cable (0.50 m…5.00 m)	PDX11-FBP.050	1SAJ924001R0005		0.100 (1.102)
	PDX11-FBP.100	1SAJ924001R0010		0.130 (0.287)
	PDX11-FBP.300	1SAJ924001R0030		0.271 (0.597)
	PDX11-FBP.500	1SAJ924001R0050		0.442 (0.974)
(2) Connection cable (0.30 m…1.50 m)	CDP15-FBP.030	1SAJ929140R0003		1.180 (2.601)
	CDP15-FBP.060	1SAJ929140R0006		0.100 (0.220)
	CDP15-FBP.150	1SAJ929140R0015		0.099 (0.218)
(3) Fixing bracket for passive plug	CDP11-FBP.0	1SAJ929100R0001		0.010 (0.220)

Note: Refer to „FBP terminal device data, overview“ see page 1/21. for system accessories and documentation.

Accessories for PROFIBUS DP bus connection
Ordering details

PDF11-FBP.050

PDM11-FBP.050

Round cables for bus junctions

Ready-made bus cable with M12 connector and one cable end open.

Applicable for bus junctions such as e.g. Profibus DP couplers or devices with integrated Profibus DP communication. All M12 plugs are A-coded if not explicitly stated otherwise.

Ordering details

PROFIBUS DP round cable for bus junctions	Cable length	Type	Order code	Price 1 pce	Weight (1 pce) kg (lb)
Round cable with female connector	0.50 m	PDF11-FBP.050	1SAJ924002R0005		0.040 (0.088)
Round cable with male connector	0.50 m	PDM11-FBP.050	1SAJ924003R0005		0.040 (0.088)

PDX11-FBP

Round cables for bus extension

Ready-made Profibus DP cable - round cable with M12 female and male connectors (PDX11-FBP.xxx). Profibus DP bus cable – round cable on coil (PDC11-FBP.999).

Ordering details

PROFIBUS DP extension cable	Cable length	Type	Order code	Price 1 pce	Weight (1 pce) kg (lb)
Ready-made cable	0.50 m	PDX11-FBP.050	1SAJ924001R0005		0.040 (0.088)
Ready-made cable	1.00 m	PDX11-FBP.100	1SAJ924001R0010		0.080 (0.176)
Ready-made cable	3.00 m	PDX11-FBP.300	1SAJ924001R0030		0.200 (0.441)
Ready-made cable	5.00 m	PDX11-FBP.500	1SAJ924001R0050		0.310 (0.683)
Coil	100 m	PDC11-FBP.999	1SAJ924004R1000		5.600 (12.346)

PDM11-FBP.0

PDF11-FBP.0

PDV11-FBP.0
PDV12-FBP.0

Ordering details - Accessories for bus extension

PROFIBUS DP cable connector	Type	Order code	Price 1 pce	Weight (1 pce) kg (lb)
Male plug for round cables	PDM11-FBP.0	1SAJ924005R0001		0.030 (0.066)
Female plug for round cables	PDF11-FBP.0	1SAJ924006R0001		0.030 (0.066)

PDR11-FBP.150

PDA11-FBP.050

PDA12-FBP.050

Ordering details - Line termination, feeding connectors, adapters

Designation	Type	Order code	Price 1 pce	Weight (1 pce) kg (lb)
Line termination 150 ohms	PDR11-FBP.150	1SAJ924007R0001		0.030 (0.066)
Feeding connector 24 V DC, code B-A	PDV11-FBP.0	1SAJ924008R0001		0.040 (0.088)
Feeding connector 24 V DC, code A-A	PDV12-FBP.0	1SAJ924011R0001		0.040 (0.088)
Adapter Dsub9-M12, cable length 0.50 m	PDA11-FBP.050	1SAJ924009R0005		0.040 (0.088)
Adapter M12-Dsub9-M12, cable length 2 x 0.50 m	PDA12-FBP.050	1SAJ924010R0005		0.040 (0.088)

Accessories for PROFIBUS DP FieldBusPlug PDQ22-FBP
Ordering details

CDP15-FBP

CDP16-FBP

Several Universal Motor Controllers on a PROFIBUS DP node

Ordering details

Designation	Accessory type	Type	Order code	Price 1 pce	Weight (1 pce) kg (lb)
DIN rail adapter for PDQ22-FBP	Mounting material	CDA11-FBP.0	1SAJ929300R0001		0.110 (0.242)
Fixing bracket for passive plug of connection cable	Mounting material	CDP11-FBP.0	1SAJ929100R0001		0.500 (1.102)
Connection cable (female/male), shielded, length 0.3 m	Connection cables	CDP15-FBP.030	1SAJ929140R0003		0.100 (0.220)
Connection cable (female/male), shielded, length 0.6 m	Connection cables	CDP15-FBP.060	1SAJ929140R0006		0.150 (0.331)
Connection cable (female/male), shielded, length 1.5 m	Connection cables	CDP15-FBP.150	1SAJ929140R0015		0.200 (0.441)
Connection cable (male/open end), shielded,length 1.5 m	Connection cables	CDP16-FBP.150	1SAJ929150R0015		0.200 (0.441)

DeviceNet, CANopen® and Modbus-RTU FieldBusPlugs
Ordering details

DNP21-FBP
COP21-FBP
MRP21-FBP

DeviceNet FieldBusPlug

Ready-made DeviceNet fieldbus interface with various cable lengths.

- Applicable with all FBP motor starters and other terminal devices
- Data transfer rate up to 500 kbit/s
- Degree of protection: IP65
- Diagnostic LED
- Approvals: CE, cUL (further on request)

Ordering details

Designation	Cable length	Type	Order code	Price 1 pce	Weight (1 pce) kg (lb)
DeviceNet FBP	0.25 m	DNP21-FBP.025	1SAJ230000R1003		0.090 (0.198)
DeviceNet FBP	0.5 m	DNP21-FBP.050	1SAJ230000R1005		0.100 (0.220)
DeviceNet FBP	1.00 m	DNP21-FBP.100	1SAJ230000R1010		0.130 (0.287)
DeviceNet FBP	5.00 m	DNP21-FBP.500	1SAJ230000R1050		0.360 (0.794)

CANopen® FieldBusPlug

Ready-made CANopen® fieldbus interface with various cable lengths.

- Applicable with all FBP motor starters and other terminal devices
- Data transfer rate up to 500 kbit/s
- Degree of protection: IP65
- Diagnostic LED
- Approvals: CE, cUL (applied for)

Designation	Cable length	Type	Order code	Price 1 pce	Weight (1 pce) kg (lb)
CANopen FBP	0.25 m	COP21-FBP.025	1SAJ230100R1003		0.090 (0.198)
CANopen FBP	0.5 m	COP21-FBP.050	1SAJ230100R1005		0.100 (0.220)
CANopen FBP	1.00 m	COP21-FBP.100	1SAJ230100R1010		0.130 (0.287)

Modbus-RTU FieldBusPlug

Ready-made Modbus-RTU fieldbus interface with various cable lengths.

- Applicable with all FBP motor starters and other terminal devices
- Data transfer rate up to 57.6 kbit/s
- Degree of protection: IP65
- Diagnostic LED
- Approvals: CE, cUL (applied for)

Designation	Cable length	Type	Order code	Price 1 pce	Weight (1 pce) kg (lb)
Modbus-RTU FBP	0.25 m	MRP21-FBP.025	1SAJ250000R0003		0.090 (0.198)
Modbus-RTU FBP	0.5 m	MRP21-FBP.050	1SAJ250000R0005		0.100 (0.220)
Modbus-RTU FBP	1.00 m	MRP21-FBP.100	1SAJ250000R0010		0.130 (0.287)
Modbus-RTU FBP	5.00 m	MRP21-FBP.500	1SAJ250000R0050		0.360 (0.794)

DeviceNet, CANopen® and Modbus-RTU accessories
Ordering details

DNF11-FBP.050

DNM11-FBP.050

DNX11-FBP

Accessories for DeviceNet, CANopen®, Modbus-RTU bus connection

Round cables for bus junctions

Ready-made bus cable for bus junctions, one cable end open

Ordering details

Round cables for bus junctions	Cable length	Type	Order code	Price 1 pce	Weight (1 pce) kg (lb)
Round cable with female plug	0.50 m	DNF11-FBP.050	1SAJ923002R0005		0.400 (0.882)
Round cable with male plug	0.50 m	DNM11-FBP.050	1SAJ923003R0005		0.400 (0.882)

Round cables for bus extension

Ready-made bus cable

- Round cable with female and male M12 plug (DNX11-FBP.xxx)
- Round cable on coil (DNC11-FBP.999)

Ordering details

PROFIBUS extension cable	Cable length	Type	Order code	Price 1 pce	Weight (1 pce) kg (lb)
Ready-made cable	1.00 m	DNX11-FBP.100	1SAJ923001R0010		0.080 (0.176)
Ready-made cable	3.00 m	DNX11-FBP.300	1SAJ923001R0030		0.200 (0.441)
Ready-made cable	5.00 m	DNX11-FBP.500	1SAJ923001R0050		0.310 (0.683)
Cable on coil	100.00 m	DNC11-FBP.999	1SAJ923004R1000		5.600 (12.346)

Accessories for bus extension

Ordering details

Cable connector	Type	Order code	Price 1 pce	Weight (1 pce) kg (lb)
Male plug for round cable	DNM11-FBP.0	1SAJ923005R0001		0.030 (0.066)
Female plug for round cable	DNF11-FBP.0	1SAJ923006R0001		0.030 (0.066)

DNF11-FBP.0

DNM11-FBP.0

DNR11-FBP.120

Termination resistor

Ordering details

Bus accessories	Type	Order code	Price 1 pce	Weight (1 pce) kg (lb)
Termination resistor 120 ohms	DNR11-FBP.120	1SAJ923007R0001		0.200 (0.441)

System accessories and documentation
Ordering details

Miscellaneous accessories

- Addressing labels for address labelling of FieldBusPlugs.
- Covering caps for protection of open M12 plugs

Ordering details

Designation	Type	Order code	Price 1 pce	Weight (1 pce) kg (lb)
Addressing labels for FieldBusPlugs / 40 pcs	CAL11-FBP.0	1SAJ929005R0001		0.189 (0.417)
M12 covering caps for FieldBusPlugs / 10 pcs	CCC11-FBP.0	1SAJ929006R0001		0.010 (0.022)

FieldBusPlug power supply unit

Supply voltage: 90...260 V AC, 47...63 Hz.
Adjustable output voltage: 23...28 V DC, 5 A.

CP-E 24/2.5

Ordering details

Designation	Type	Order code	Price 1 pce	Weight (1 pce) kg (lb)
Power supply unit 24 V / 2.5 A	CP-E 24/2.5	1SVR427032R0000		0.360 (0.882)
Power supply unit 24 V / 5 A	CP-S 24/5.0	1SVR427014R0000		0.960 (0.882)

For larger power supplies please refer to www.abb.com
> Low Voltage Products and Systems > Control Products > Electronic Relays and Controls > Power Supplies

CP-S 24/5.0

Accessories for installation in control cabinet drawer systems

Fixing brackets for passive plug and FBP passive cables for installation of FBP terminal devices in drawer systems.

Ordering details

Designation	Cable length	Type	Order code	Price 1 pce	Weight (1 pce) kg (lb)
Passive plug fixing bracket for drawer systems / 50 pcs		CDP11-FBP.0	1SAJ929100R0001		0.500 (1.102)
Passive plug fixing bracket for drawer systems / 4 pcs		CDP11-FBP.4	1SAJ929100R0004		0.400 (0.882)
Passive cable for drawer systems (outside)	1.00 m	CDP12-FBP.100	1SAJ929120R0001		0.200 (0.441)
Passive cable for drawer systems (inside)	1.00 m	CDP13-FBP.100	1SAJ929110R0001		0.310 (0.683)

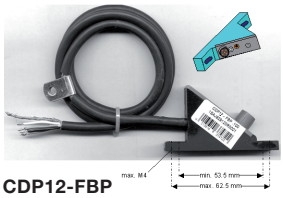

CDP12-FBP

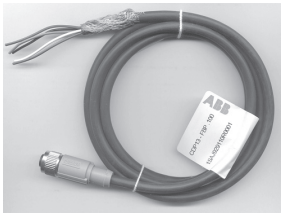
CDP13-FBP

FieldBusPlug system documentation

Complete system documentation for planning and project planning.
Technical data, software, CAD symbols, examples, FAQs.

Ordering details

Designation	Language	Type	Order code	Price 1 pce	Weight (1 pce) kg (lb)
CD-ROM version	German/Englisch	FieldBusPlug documentation	2CDC190008E04xx		0.010 (0.220)

Communicative motor starters with control functions
Techncial data - UMC100-FBP

		UMC100-FBP
Main circuit		
Voltage (3-phase system)		1000 V AC (see manual), 45 … 65 Hz, 3-phase system
Nominal motor current		0.24 … 63 A with integrated current transformers, up to 850 A with external current transformers
Overload protection for 3-phase motors		According to EN/IEC 60947-4-1
Trip categories (adjustable)		5, 10, 20, 30, 40
Extended motor model		Cooling time definition by calculat. or configurat.
Feed-through holes of internal current transformer		25 mm² max. (11 mm max. wire diameter incl. insulation)
Short-circuit protection		By fuse on line side
Control voltage circuit		
Supply voltage		24 V DC (+ 30 %, – 20 %, incl. residual ripple)
Current consumption incl. inputs, relays energized		360 mA
Total power dissipation		9 W max.
Reverse polarity protection		yes
Inputs/outputs		
Digital inputs		6 inputs 24 V DC
PTC input		1
Digital outputs		3 relay outputs with common supply
		1 transistor output 24 V DC, 0.2 A
Voltage switching capacity		24 V AC/DC … 250 V AC/DC
Current switching capacity per relay		
	240 V AC (AC15)	1.5 A max.
	120 V AC (AC15)	3 A max.
	250 V DC (DC13)	0.11 A max.
	125 V DC (DC13)	0.22 A max.
	24 V DC (DC13)	1 A max.
Load current via common		I_{max} = 6 A gL / gG (thermal limit)
Relay contact lifetime		> 500.000 switching cycles – mechanical > 100.000 switching cycles – at 250 V AC, 0,5 A > 50.000 switching cycles – at 250 V AC, 1,5 A
Contact wiring for inductive load		Free-wheeling diode for direct current, varistors/VDRs for alternating current
Interfaces		
Bus interface		1 (for connection of ABB FieldBusPlug)
Operating panel interface		1 (for connection of UMC100-PAN operating panel)
Interface for I/O expansion		1 (for connection of I/O expansion modules)
Integrated diagnostic functions		Green LED: Device ready for operation Yellow LED: Motor running (motor current > 20 % of nominal current adjusted) Red LED: Error (tripping, failure, ...)
Further diagnostic functions		Operating hours, contactor switching cycles count, tripping events due to overload count
		Time period since last tripping event
		Error history
		Selectable warning & tripping limits
Integrated control functions		Direct starting, reverse starting, star-delta starting, pole-changing starting, actuator/servo-drive, transparent mode, emergency start function, stand alone operation (even without bus connection)
		Time-controlled load shedding in case of voltage dips / configurable starting delay
Integrated motor protection functions		Overload monitoring, phase failure detection, motor blocking detection, thermal overload monitoring (PTC), earth fault monitoring with sensor CEM11-FBP
		Configurable checkback time, phase imbalance detection, fast blocking protection during starting
Parameter setting / configuration		Operating panel, fieldbus (FieldBusPlug), DTM (DeviceTypeManager)
Customer-specific applications		Configurable logic
General data		
Conductor cross section		1 x 0.2 - 2.5 mm² max.
Mounting		On DIN rail or with screws (4 screws M4)
Dimensions		70 x 105 x 87,5 mm (110 mm incl. operating panel and FBP)
Weight		0.282 kg (0.622 lb)
Degree of protection		IP20
Temperature range		Storage: – 25 … + 70 °C
		Operation: 0 … + 60 °C
Approvals		ATEX, CCC, CE, cUL, GL, GOST (other approvals on request)
Operating panel (optional)		Adjustment and visualization of motor & device data and bus parameters, status indication of digital Inputs & outputs, contactor switching cycles and operating hours counting, local operation on site
		Graphical multilingual user interface
I/O expansion modules (optional)		2 I/O expansion modules

FBP terminal device data, overview
Techncial data - DX111, DX122

I/O expansion modules for Universal Motor Controller UMC100-FBP

The I/O expansion modules are exclusively intended to supplement the UMC100-FBP with additional inputs and outputs. Customer-specific adaptations are possible by means of logical interconnection of the I/O channels. The information is available for local functions and via the fieldbus. The PBTDM tool is required for configuration.

		DX111	DX122
Electrical data			
Supply voltage		24 V DC (+ 30 %, – 20 %) (19.2 … 31.2 V DC incl. residual ripple)	
Current consumption incl. inputs, relays energized		90 mA max.	
Digital inputs			
Number of inputs		8 inputs in 2 groups of common reference potential (1 group with 5 inputs, 1 group with 3 inputs) Insulation: Type 1 acc. to EN 61131-1	8 inputs in 2 groups of common reference potential (1 group with 5 inputs, 1 group with 3 inputs) Insulation: Type 2 acc. to EN 61131-1
Input voltage		24 V DC	110 V AC … 240 V AC
Input delay		6 ms typ.	20 ms typ.
Signal levels	0 state	– 31.2 … + 5 V	0 … 40 V AC
	1 state	+ 15 … + 31.2 V	74 … 265 V AC
ON current per channel		6.0 mA typ. (24 V DC)	10.0 mA typ. (230 V AC)
Input resistance against 0 V		3.9 kΩ	
Frequency range			45 … 65 Hz
Digital outputs			
Number of digital outputs		4 relay outputs with 2 common supplies (1DO0 & 1DO1 by 1DOC; 2DO2 & 2DO3 by 2DOC)	
Voltage switching capacity		12 … 250 V AC/DC	
Load current via common		I_{max} = 6 A gL / gG per common supply (1DOC, 2DOC)	
Minimum load for proper switching		1 W or 1 VA	
Contact wiring for inductive load		Free-wheeling diode for direct current, varistors/VDRs for alternating current	
Current switching capacity per relay		EN 60947-5-1	
	240 V AC (AC15)	1.5 A max.	
	120 V AC (AC15)	3 A max.	
	250 V DC (DC13)	0.11 A max.	
	125 V DC (DC13)	0.22 A max.	
	24 V DC (DC13)	1 A max.	
Relay contact lifetime		> 500.000 switching cycles – mechanical > 100.000 switching cycles – at 250 V AC, 0.5 A > 50.000 switching cycles – at 250 V AC, 1.5 A	
Analog output			
Number of analog outputs		1	
Connection type		2-wire, for motor current indication on an external analog instrument	
Output ranges		Configurable: 0/4 …20 mA or 0 … 10 V	
Cable specification		< 30 m outside the control cabinet; > 30 m if shielded	
Max. output voltage		10 V	
Accuracy		< 5 %	
Output load		500 Ω max. if configured for 0/4 … 20 mA output; 1 kΩ min. if configured for 0 … 10 V output	
Resolution		8 bits	
Short-circuit detection		Yes, if configured for 0 … 10 V output	
Wire break detection		Yes, if configured for 0/4 … 20 mA output	
Insulation		none	
Interfaces			
Interface for I/O expansion		1 (for connection to UMC100-FBP or I/O expansion modules)	
Integrated diagnostic functions		Green LED: Device ready for operation Yellow LED: Wire break or short circuit indication Red LED: Error (loss of communication, failure, …)	
General data			
Conductor cross section		2 x 0.75 - 2.5 mm² max.	
Mounting		Snap-on mounting on DIN rail, any mounting position	
Dimensions		45 x 77 x 100 mm (without communication plug)	
Weight		0.220 kg	
Degree of protection		IP20	
Temperature range		Storage: – 25 … + 70 °C Operation: 0 … + 60 °C	Storage: – 25 … + 70 °C Operation: 0 … + 55 °C
Approvals		ATEX, CCC, CE, cUL, GL, GOST (other approvals on request)	

FBP terminal device data, overview
Techncial data - VI150, VI155

I/O expansion modules for Universal Motor Controller UMC100-FBP

The I/O expansion modules are exclusively intended to supplement the UMC100-FBP with additional inputs and outputs. Customer-specific adaptations are possible by means of logical interconnection of the I/O channels. The information is available for local functions and via the fieldbus. The PBTDM tool is required for configuration.

	VI150	VI155
Application	**only in grounded networks**	**in grounded and ungrounded newtworks**
Electrical data		
Supply voltage	24 V DC (+ 30 %, – 20 %) (19.2 … 31.2 V DC including ripple)	
Current consumption relay energized	max. 40 mA	max. 55 mA
Voltage input	L1, L2, L3	
Overvoltage category	III in grounded networks	
		II in ungrounded networks
Nominal voltage input range (phase to phase)	150 - 690 V AC	
U_{imp}	8 kV	
Accuracy voltage	+/- 2% in nominal input range	
Accuracy power factor	+/- 3.5 % in range 0.4 ... 0.95, I > 0.75 A	
Accuracy real power kW	+/- 5 % typ.	
Accuracy energy kWh	+/- 5 % typ.	
Total Harmonic Distortion THD	in %	
Rated operational voltage U_e	690 V AC	
Voltage supply cables	connection cables for voltage measurement may require additional cable protection	
Digital output		
Number	1 relay output	
Voltage switching capacity	12 … 250 V AC/DC	
Current switching capacity	EN 60947-5-1	
240 V AC (AC15)	max. 1.5 A	
120 V AC (AC15)	max. 3 A	
250 V DC (DC13)	max. 0.11 A	
125 V DC (DC13)	max. 0.22 A	
24 V DC (DC13)	max. 1 A	
Minimum load for proper switching	1 W or 1 VA	
Contact wiring for inductive load	free-wheeling diode for DC, Varistors/VDRs for AC	
Relay contact lifetime	> 500.000 switching cycles – mechanical > 100.000 switching cycles – at 250 V AC, 0,5 A > 50.000 switching cycles – at 250 V AC, 1,5 A	
Interfaces		
Interface for I/O expansion	1 (zum Anschluss an UMC100-FBP und Digitalem Erweiterungsmodul)	
Integrated diagnostic functions	Green LED: Device ready Yellow LED: Diagnostics Red LED: Fault	
General data		
Conductor cross section	2 x 0.75 - 2.5 mm² max.	
Mounting	snap-on mounting on DIN-rail, any mounting position Min. 10 mm distance left and right to the L1 and L3 terminals required for voltages > 230 / 400 V	
Dimensions (W x H x D)	22.5 x 77 x 100 mm (excl. communication connector)	
Weight	0.110 kg	
Degree of protection	IP20	
Temperature range	storage: - 25 … + 70 °C, operation:: 0 … + 60 °C"	
Operation altitude above sea level	max. 2000 m	max. 4000 m without derating
Approvals	ATEX, CCC, CE, cUL, GL, GOST (other approvals on request)	

FBP FieldBusPlug
Dimensional drawings

Dimensions in mm

FieldBusPlugs and accessories

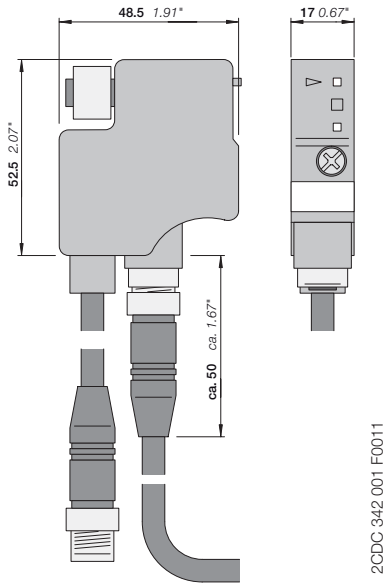

PDP22-FBP, DNP21-FBP, COP21-FBP, MRP21-FBP

Communicative motor starters with control functions

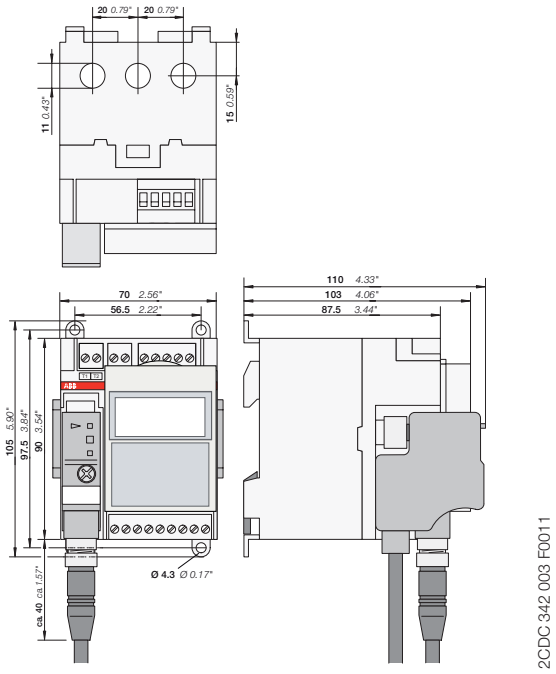

Universal Motor Controller UMC100-FBP

PROFIBUS DP FieldBusPlug for 4 FBP devices

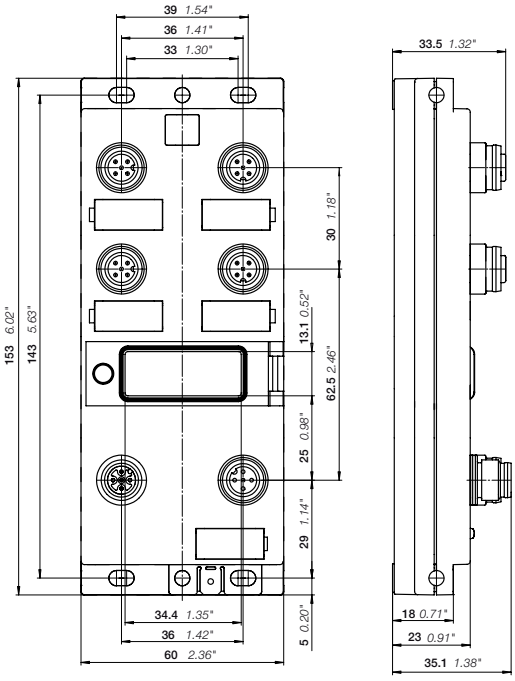

PDQ22-FBP

PROFIBUS DP (V0/V1) Node for 4 FBP subscribers

I/O expansion modules for Universal Motor Controller UMC100-FBP

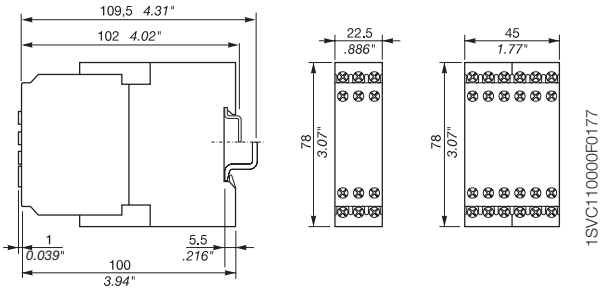

DX111-FBP, DX122-FBP
VI150-FBP, VI155-FBP

VI150-FBP,
VI155-FBP

DX111-FBP,
DX122-FBP

LCD-Control panel for UMC100-FBP

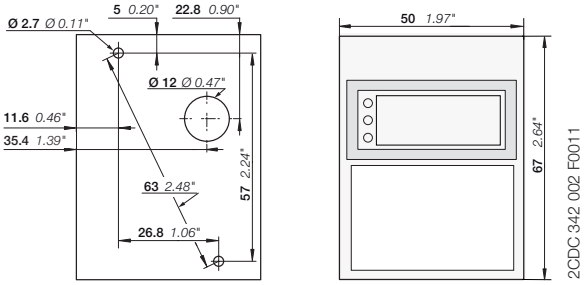

Drilling plan for
door mounting

Frontal view
LCD panel

FBP FieldBusPlug
Dimensional drawings

Accessories

Dimensions in mm

Earth fault monitor for use with Universal Motor Controller UMC100-FBP

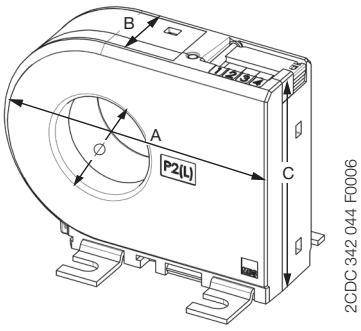

Type	W(A)	D (B)	H (C)	Ø
CEM11-FBP.20	76.4 (3.01)	30 (1.18)	56 (2.20)	20 (0.79)
CEM11-FBP.35	99.5 (1.38)	30 (1.18)	79 (3.11)	35 (1.38)
CEM11-FBP.60	135 (5.31)	38 (1.46)	116 (4.57)	60 (2.36)
CEM11-FBP.120	210 (8.27)	38 (1.46)	190 (7.48)	120 (4.72)

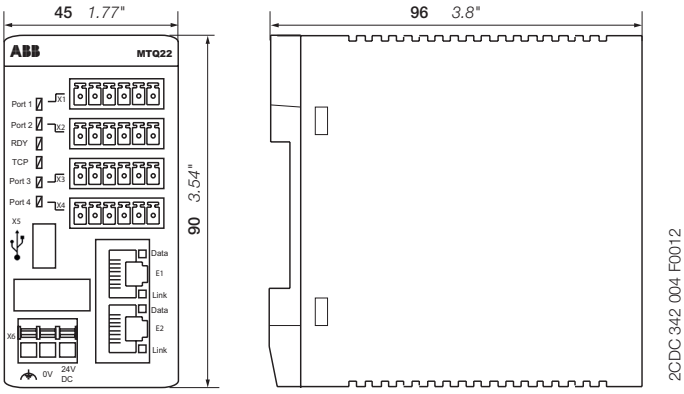

mm / inch

MTQ-22

Current transformer for use with Universal Motor Controller UMC100-FBP

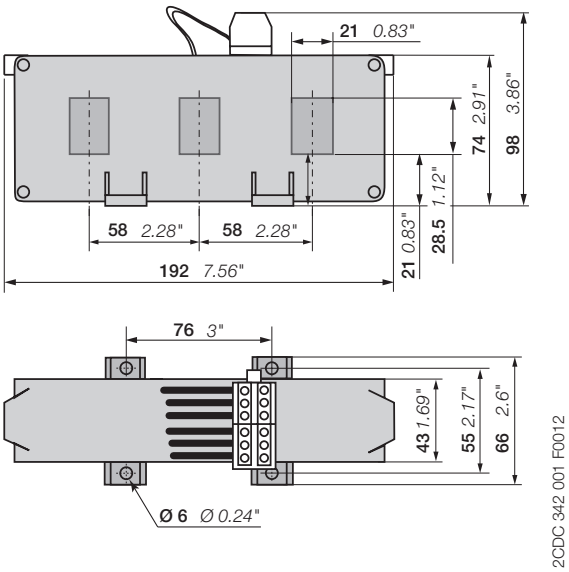

CT4L185R/4, CT4L310R/4

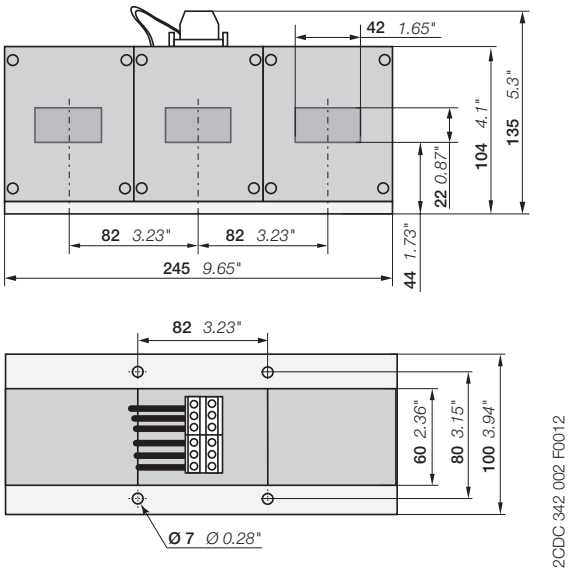

CT5L500R/4, CT5L850R/4

FBP FieldBusPlug
Configuration examples for the integration of other terminal devices to the FieldBusPlug system

Tmax T4/T5

Emax

EP010

Communicative power circuit breakers Tmax and Emax

FBP interface module EP010 for connection to FieldBusPlug connector.

PROFIBUS line with power circuit breaker and EP010

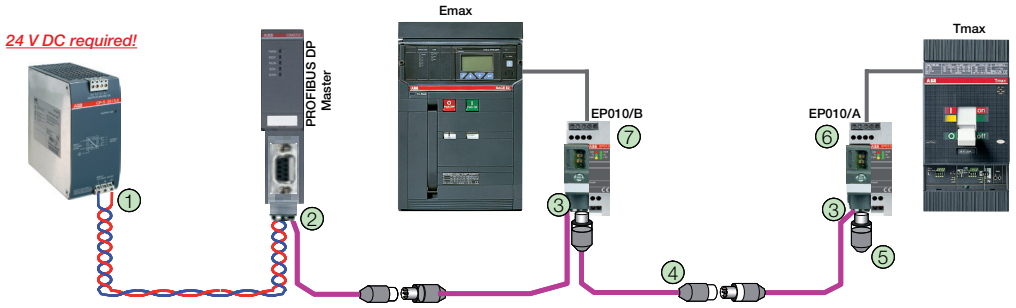

Ordering details

Description	Type	Order code	Price 1 pce	Weight (1 pce) kg (lb)
(1) Power supply unit 110 … 240 V AC/24 V DC, 10 A	CP-S 24/10.0	1SVR427015R0100		1.107 (2.441)
(2) Adapter SubD-9 - M12 (A-coded)	PDA11-FBP.050	1SAJ924009R0005		0.113 (0.249)
(3) FieldBusPlug PROFIBUS DP V0/V1 (0.25 m … 5 m)	PDP22-FBP.025	1SAJ240100R1003		0.120 (0.265)
	PDP22-FBP.050	1SAJ240100R1005		0.120 (0.265)
	PDP22-FBP.100	1SAJ240100R1010		0.157 (0.346)
	PDP22-FBP.200	1SAJ240100R1020		0.225 (0.496)
	PDP22-FBP.500	1SAJ240100R1050		0.468 (1.032)
(4) PROFIBUS DP extension cable (0.50 m … 5.00 m)	PDX11-FBP.050	1SAJ924001R0005		0.100 (0.220)
	PDX11-FBP.100	1SAJ924001R0010		0.113 (0.249)
	PDX11-FBP.300	1SAJ924001R0030		0.271 (0.597)
	PDX11-FBP.500	1SAJ924001R0050		0.442 (0.974)
(5) Line termination 150 ohms	PDR11-FBP.150	1SAJ924007R0001		0.030 (0.066)
(6) Communication interface type A (Tmax: T4, T5, T6)	EP010	1SDA059469R0001		0.480 (1.058)
(7) Communication interface type B (Emax, Tmax: T7)	EP010	1SDA060198R0001		0.139 (0.306)

FBP FieldBusPlug
Configuration examples for the integration of other terminal devices to the FieldBusPlug system

PST

PSR

Communicative softstarters PST/PSR

Compact device with fieldbus-neutral interface for connection to FieldBusPlug connector.

PROFIBUS line with softstarters

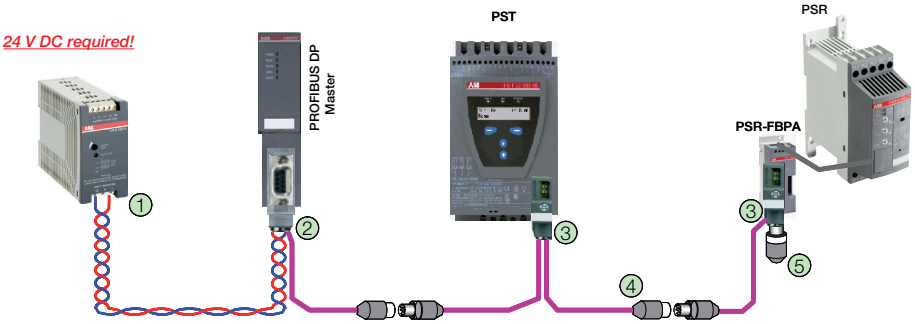

Ordering details

Description	Type	Order code	Price 1 pce	Weight (1 pce) kg (lb)
(1) Power supply unit 100 .. 240 V AC/24 V DC, 1.25 A	CP-E 24/1.25	1SVR427031R0000		0.270 (0.595)
(2) Adapter SubD-9 - M12 (A-coded)	PDA11-FBP.050	1SAJ924009R0005		0.113 (0.249)
(3) FieldBusPlug PROFIBUS DP V0/V1 (0.25 m … 5 m)	PDP22-FBP.025	1SAJ240100R1003		0.120 (0.265)
	PDP22-FBP.050	1SAJ240100R1005		0.120 (0.265)
	PDP22-FBP.100	1SAJ240100R1010		0.157 (0.346)
	PDP22-FBP.200	1SAJ240100R1020		0.225 (0.496)
	PDP22-FBP.500	1SAJ240100R1050		0.468 (1.032)
(4) PROFIBUS DP extension cable (0.50 m … 5.00 m)	PDX11-FBP.050	1SAJ924001R0005		0.100 (0.220)
	PDX11-FBP.100	1SAJ924001R0010		0.113 (0.249)
	PDX11-FBP.300	1SAJ924001R0030		0.271 (0.597)
	PDX11-FBP.500	1SAJ924001R0050		0.442 (0.974)
(5) Line termination 150 ohms	PDR11-FBP.150	1SAJ924007R0001		0.030 (0.066)

FBP FieldBusPlug
Configuration examples for the integration of other terminal devices to the FieldBusPlug system

AC500

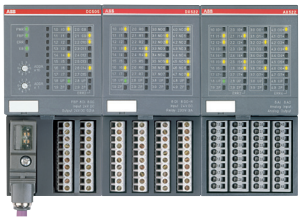

S500

AC500 automation devices connected via PROFIBUS DP

Automation device with fieldbus-neutral interface for connection to FieldBusPlug connector.

PROFIBUS line with intelligent and non-intelligent decentralized AC500 I/O devices

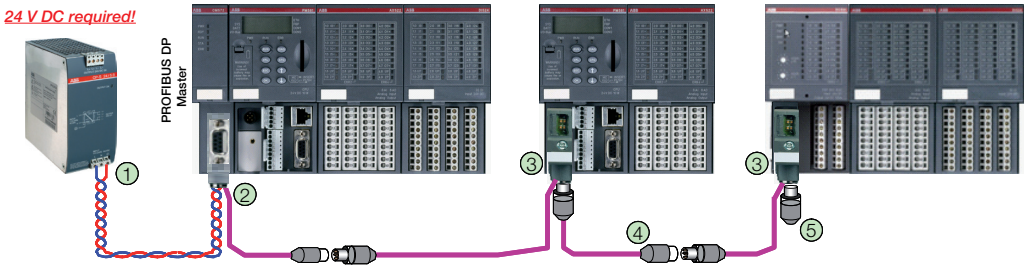

Ordering details

Description	Type	Order code	Price 1 pce	Weight (1 pce) kg (lb)
(1) Power supply unit 110 … 240 V AC/24 V DC, 10 A	CP-S 24/10.0	1SVR427015R0100		1.107 (2.441)
(2) Adapter SubD-9 - M12 (A-coded)	PDA11-FBP.050	1SAJ924009R0005		0.113 (0.249)
(3) FieldBusPlug PROFIBUS DP V0/V1 (0.25 m … 5 m)	PDP22-FBP.025	1SAJ240100R1003		0.120 (0.265)
	PDP22-FBP.050	1SAJ240100R1005		0.120 (0.265)
	PDP22-FBP.100	1SAJ240100R1010		0.157 (0.346)
	PDP22-FBP.200	1SAJ240100R1020		0.225 (0.496)
	PDP22-FBP.500	1SAJ240100R1050		0.468 (1.032)
(4) PROFIBUS DP extension cable (0.50 m … 5.00 m)	PDX11-FBP.050	1SAJ924001R0005		0.100 (0.220)
	PDX11-FBP.100	1SAJ924001R0010		0.113 (0.249)
	PDX11-FBP.300	1SAJ924001R0030		0.271 (0.597)
	PDX11-FBP.500	1SAJ924001R0050		0.442 (0.974)
(5) Line termination 150 ohms	PDR11-FBP.150	1SAJ924007R0001		0.030 (0.066)

FBP FieldBusPlug
Configuration examples for the integration of other terminal devices to the FieldBusPlug system

UMC100-FBP
DX122-FBP

PDQ22-FBP

Several Universal Motor Controllers on one PROFIBUS DP node

Up to 4 FBP devices can be connected to one PROFIBUS DP distributor. The fieldbus-neutral interface of each FBP device is connected to the fieldbus-neutral interface of the distributor.

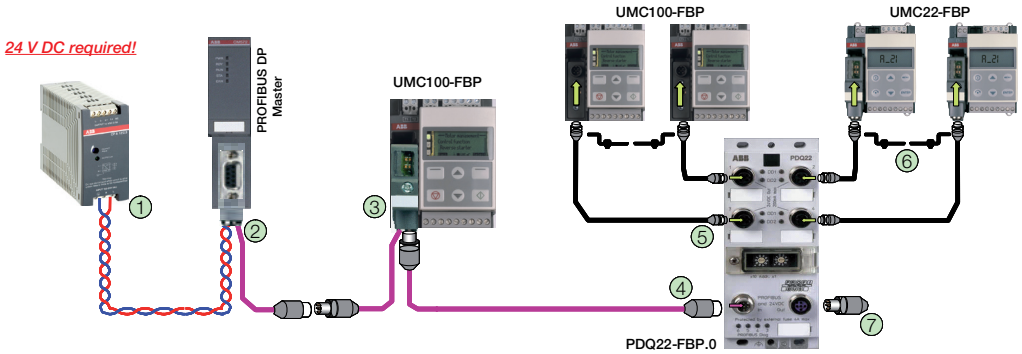

Ordering details

Description	Type	Order code	Price 1 pce	Weight (1 pce) kg (lb)
(1) Power supply unit 110 … 240 V AC/24 V DC, 2.5 A	CP-E 24/2.5	1SVR427032R0000		0.331 (0.730)
(2) Adapter SubD-9 - M12 (A-coded)	PDA11-FBP.050	1SAJ924009R0005		0.113 (0.249)
(3) FieldBusPlug PROFIBUS DP V0/V1 (0.25 m … 5 m)	PDP22-FBP.025	1SAJ240100R1003		0.120 (0.265)
	PDP22-FBP.050	1SAJ240100R1005		0.120 (0.265)
	PDP22-FBP.100	1SAJ240100R1010		0.157 (0.346)
	PDP22-FBP.200	1SAJ240100R1020		0.225 (0.496)
	PDP22-FBP.500	1SAJ240100R1050		0.468 (1.032)
(4) PROFIBUS DP extension cable (0.50 m … 5.00 m)	PDX11-FBP.050	1SAJ924001R0005		0.100 (0.220)
	PDX11-FBP.100	1SAJ924001R0010		0.113 (0.249)
	PDX11-FBP.300	1SAJ924001R0030		0.271 (0.597)
	PDX11-FBP.500	1SAJ924001R0050		0.442 (0.974)
(5) Connection cable (0.30 m … 1.50 m)	CDP15-FBP.030	1SAJ929140R0003		0.100 (0.220)
	CDP15-FBP.060	1SAJ929140R0006		0.100 (0.220)
	CDP15-FBP.150	1SAJ929140R0015		0.100 (0.220)
(6) Fixing bracket for passive plug	CDP11-FBP.0	1SAJ929100R0001		0.010 (0.220)
(7) Line termination 150 ohms	PDR11-FBP.150	1SAJ924007R0001		0.030 (0.066)

FBP FieldBusPlug
Configuration examples for the integration of Universal Motor Controllers into MCCs

Motor management
UMC100-FBP

Operating panel
UMC100-PAN

Universal Motor Controllers in Motor Control Centers (MCCs)

Components for installation of Universal Motor Controller UMC100-FBP to an MCC using drawer systems. Configurations with up to four controllers connected to one PROFIBUS DP node are supported.

Single Universal Motor Controller on a PROFIBUS DP node

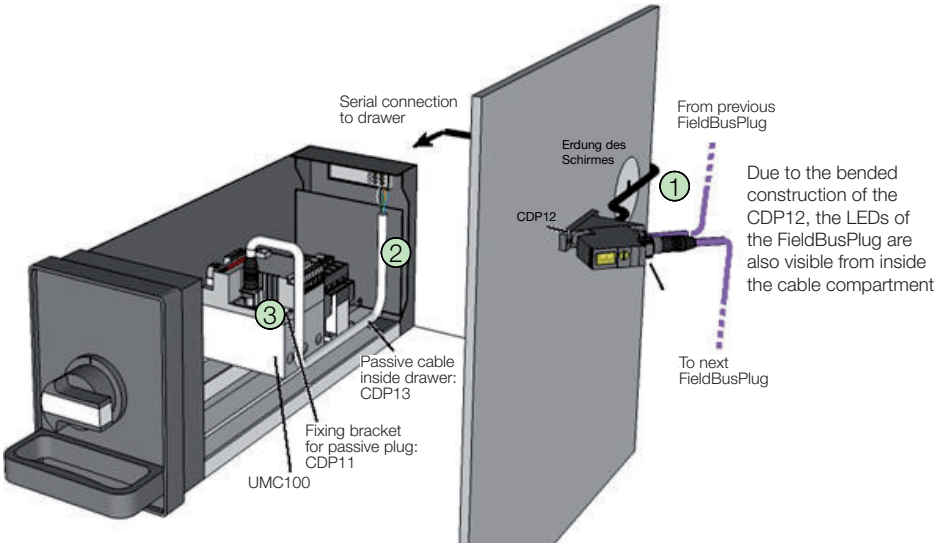

Ordering details

Description	Type	Order code	Price 1 pce	Weight (1 pce) kg (lb)
(1) Passive cable for drawer systems (outside)	CDP12-FBP.100	1SAJ929120R0001		0.070 (0.154)
(2) Passive cable for drawer systems (inside)	CDP13-FBP.100	1SAJ929110R0001		0.099 (0.218)
(3) Fixing bracket for passive plug	CDP11-FBP.0	1SAJ929100R0001		0.010 (0.220)

FBP FieldBusPlug
Configuration examples for the integration of Universal Motor Controllers into MCCs

Several Universal Motor Controllers on a PROFIBUS DP node)

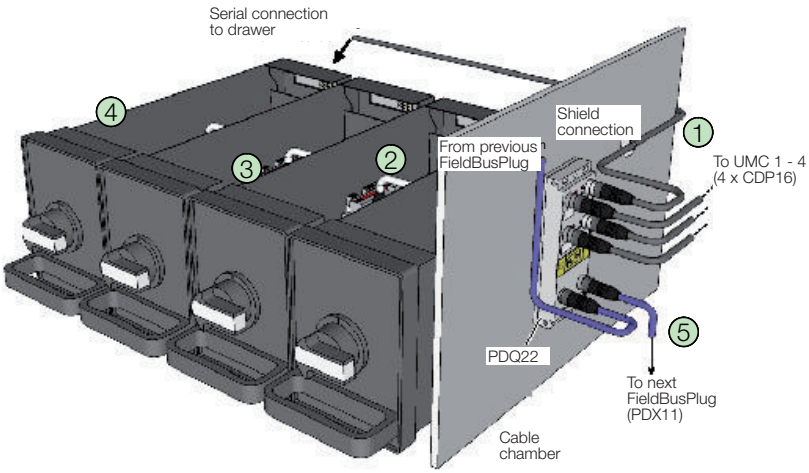

2CDC341049F0206

PDQ22-FBP

Ordering details

Description	Type	Order code	Price 1 pce	Weight (1 pce) kg (lb)
(1) Connection cable, one end open, 1.50 m	CDP16-FBP.150	1SAJ929150R0015		0.099 (0.218)
(2) Passive cable for drawer systems (inside)	CDP13-FBP.100	1SAJ929110R0001		0.099 (0.218)
(3) Fixing bracket for passive plug	CDP11-FBP.0	1SAJ929100R0001		0.010 (0.220)
(4) Extension cable for operating panel, 0.70 m [1]	UMCPAN-CAB.070	1SAJ510003R0001		0.070 (0.154)
(5) PROFIBUS DP extension cable (0.50 m … 5.00 m)	PDX11-FBP.050	1SAJ924001R0005		0.100 (0.220)
	PDX11-FBP.100	1SAJ924001R0010		0.113 (0.249)
	PDX11-FBP.300	1SAJ924001R0030		0.271 (0.597)
	PDX11-FBP.500	1SAJ924001R0050		0.442 (0.974)

[1] No. 4 only necessary when using an operating panel!

FBP FieldBusPlug
Configuration examples for the integration of third-party terminal devices to the FieldBusPlug system

UMC100-FBP
DX122-FBP

Universal Motor Controllers in Motor Control Centers (MCCs)

Configuration of a PROFIBUS DP bus line consisting of FieldBusPlug components and third-party devices with different connection types.

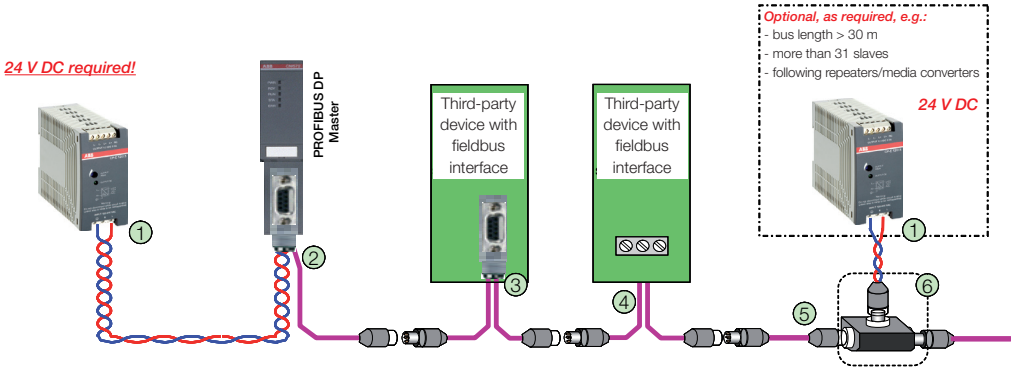

Ordering details

Description	Type	Order code	Price 1 pce	Weight (1 pce) kg (lb)
(1) Power supply unit 110 … 240 V AC/24 V DC, 2.5 A	CP-E 24/2.5	1SVR427032R0000		0.331 (0.730)
(2) Adapter SubD-9 - M12 (A-coded)	PDA11-FBP.050	1SAJ924009R0005		0.113 (0.218)
(3) Adapter M12 - SubD-9 - M12 (A/A-coded)	PDA12-FBP.050	1SAJ924010R0005		0.136 (0.249)
(4) Round cable with female plug, length 0.50 m	PDF11-FBP.050	1SAJ924002R0005		0.05 (0.243)
(4) Round cable with male plug, length 0.50 m	PDM11-FBP.050	1SAJ924003R0005		0.05 (0.243)
(5) PROFIBUS DP extension cable (0.50 m … 5.00 m)	PDX11-FBP.050	1SAJ924001R0005		0.100 (0.220)
	PDX11-FBP.100	1SAJ924001R0010		0.113 (0.218)
	PDX11-FBP.300	1SAJ924001R0030		0.271 (0.597)
	PDX11-FBP.500	1SAJ924001R0050		0.442 (0.974)
(6) Feeding connector 24 V DC (A-coded)	PDV12-FBP.0	1SAJ924011R0001		0.096 (0.212)

FBP FieldBusPlug
Notes

FBP FieldBusPlug
Notes

FBP FieldBusPlug
Notes

FBP FieldBusPlug
Notes

Contact us

ABB STOTZ-KONTAKT GmbH
http://www.abb.com/lowvoltage
-> Control Products -> Motor Controllers

www.abb.com/contacts

Note:
We reserve the right to make technical changes or modify the contents of this document without prior notice. With regard to purchase orders, the agreed particulars shall prevail. ABB AG does not accept any responsibility whatsoever for potential errors or possible lack of information in this document.

We reserve all rights in this document and in the subject matter and illustrations contained therein. Any reproduction, disclosure to third parties or utilization of its contents – in whole or in parts – is forbidden without prior written consent of ABB AG.

Copyright© 2012 ABB
All rights reserved

DEABB 2CDC 190 022 C0205 Printed in the Federal Republic of Germany (11.2012-ZVD)

Power and productivity
for a better world™