Application manual

REL 511-C1*2.3

Line distance protection terminal for solidly grounded networks

About this manual

DocID: 1MRK 506 116-UEN
Issue date: July 2001
Status: New
Version: 2.3
Revision: 00

© ABB Automation Products AB 2001
Substation Automation Division

COPYRIGHT

WE RESERVE ALL RIGHTS TO THIS DOCUMENT, EVEN IN THE EVENT THAT A PATENT IS ISSUED AND A DIFFERENT COMMERCIAL PROPRIETARY RIGHT IS REGISTERED. IMPROPER USE, IN PARTICULAR REPRODUCTION AND DISSEMINATION TO THIRD PARTIES, IS NOT PERMITTED.

THIS DOCUMENT HAS BEEN CAREFULLY CHECKED. IF THE USER NEVERTHELESS DETECTS ANY ERRORS, HE IS ASKED TO NOTIFY US AS SOON AS POSSIBLE.

THE DATA CONTAINED IN THIS MANUAL IS INTENDED SOLELY FOR THE PRODUCT DESCRIPTION AND IS NOT TO BE DEEMED TO BE A STATEMENT OF GUARANTEED PROPERTIES. IN THE INTERESTS OF OUR CUSTOMERS, WE CONSTANTLY SEEK TO ENSURE THAT OUR PRODUCTS ARE DEVELOPED TO THE LATEST TECHNOLOGICAL STANDARDS. AS A RESULT, IT IS POSSIBLE THAT THERE MAY BE SOME DIFFERENCES BETWEEN THE HW/SW PRODUCT AND THIS INFORMATION PRODUCT.

Manufacturer:

ABB Automation Products AB
Substation Automation Division
SE-721 59 Västerås
Sweden
Tel: +46 (0) 21 34 20 00
Fax: +46 (0) 21 14 69 18
Internet: http://www.abb.se

Contents

Chapter Page

Chapter 1 Introduction 1

Introduction to the application manual 2
About the complete set of manuals to a terminal 2
Intended audience 3
Related documents 3
Revision notes 3

Chapter 2 General 5

Features 6
Application 7
Design 8
Requirements 9
Terminal identification 17
Application 17
Calculations 17

Chapter 3 Common functions 19

Time synchronisation (TIME) 20
Application 20
Functionality 20
Calculations 20
Setting group selector (GRP) 22
Application 22
Functionality 22
Design 23
Setting lockout (HMI) 24
Application 24
Functionality 24
I/O system configurator (IOP) 26
Application 26
Functionality 26
Logic function blocks 30
Application 30
Functionality 30
Calculations 42
Self supervision (INT) 44
Application 44
Functionality 45
Blocking of signals during test 48
Functionality 48

Contents

Chapter 4 Line impedance 51

Distance protection (ZM1-5) 52
Application 52
Functionality 59
Design 66
Calculations 71
Configuration 91
Automatic switch onto fault logic (SOTF) 94
Application 94
Functionality 94
Calculations 95
Local acceleration logic (ZCLC) 96
Application 96
Functionality 96
Calculations 97
General fault criteria (GFC) 99
Application 99
Functionality 102
Design 107
Calculations 112
Power swing detection (PSD) 117
Application 117
Functionality 118
Design 120
Calculations 123
Scheme communication logic for distance protection (ZCOM) 128
Application 128
Functionality 128
Calculations 131
Current reversal and WEI logic for distance protection (ZCAL) 132
Application 132
Functionality 133
Design 134
Calculations 136

Chapter 5 Current 139

Instantaneous overcurrent protection (IOC) 140
Application 140
Functionality 140
Design 141
Calculations 142
Time delayed overcurrent protection (TOC) 147
Application 147
Functionality 147
Design 147
Calculations 149
Two step time delayed phase overcurrent protection (TOC2) 151
Application 151
Functionality 151

Contents

Calculations 152
Two step time delayed directional phase overcurrent protection (TOC3) 157
Application 157
Functionality 158
Calculations 164
Definite and inverse time-delayed residual overcurrent protection (TEF) 169
Application 169
Functionality 170
Calculations 174
Scheme communication logic for residual overcurrent protection (EFC) 178
Application 178
Functionality 178
Design 181
Calculations 181
Current reversal and weak end infeed logic for residual overcurrent protection (EFCA) 183
Application 183
Functionality 184
Design 187
Calculations 188

Chapter 6 Voltage 191

Time delayed undervoltage protection (TUV) 192
Application 192
Design 192
Calculations 192
Time delayed overvoltage protection (TOV) 193
Application 193
Functionality 193
Design 193
Calculations 196

Chapter 7 Secondary system supervision 197

Fuse failure supervision (FUSE) 198
Application 198
Functionality 198
Calculations 202

Chapter 8 Control 205

Synchrocheck (SYN) 206
Application 206
Functionality 213

Contents

Calculations 217
Automatic reclosing function (AR) 220
Application 220
Functionality 222
Calculations 228

Chapter 9 Logic 235

Trip logic (TR) 236
Application 236
Functionality 236
Design 237
High speed binary output logic (HSBO) 243
Application 243
Functionality 243
Design 247
Event function (EV) 250
Application 250
Functionality 250
Design 250
Calculations 252

Chapter 10 Monitoring 255

Disturbance report (DRP) 256
Application 256
Functionality 256
Calculations 261
Indications 268
Application 268
Functionality 268
Calculations 269
Disturbance recorder 270
Application 270
Functionality 270
Design 273
Calculations 274
Event recorder 276
Application 276
Functionality 276
Calculations 276
Fault locator (FLOC) 278
Application 278
Functionality 278
Measuring principle 279
Design 285
Calculations 285
Monitoring of AC analog measurements 287
Application 287
Functionality 287

Contents

Design 297
Calculations 298
Monitoring of DC analog measurements 303
Application 303
Functionality 303
Design 312
Calculations 314

Chapter 11 Data communication 319

Serial communication 320
Application 320
Serial communication, SPA 321
Application 321
Functionality 321
Design 321
Calculations 322
Serial communiction, IEC 324
Application 324
Functionality 324
Design 324
Calculations 325
Serial communication, LON 330
Application 330
Functionality 330
Design 330
Calculations 331
Serial communication modules (SCM) 333
SPA/IEC 333
LON 333

Chapter 12 Hardware modules 335

Platform 336
General 336
Platform configuration 337
1/2x19" platform 341
Transformer input module (TRM) 342
A/D-conversion module (ADM) 345
Main processing module (MPM) 347
Signal processing module (SPM) 349
Input/Output modules 350
Binary input module (BIM) 350
Binary output module (BOM) 351
Power supply module (PSM) 353
Human-machine interface (HMI) 354

Contents

Chapter 1 Introduction

About this chapter

This chapter introduces you to the manual as such.

1 Introduction to the application manual

1.1 About the complete set of manuals to a terminal

The complete package of manuals to a terminal is named users manual (UM). The *Users manual* consists of four different manuals:

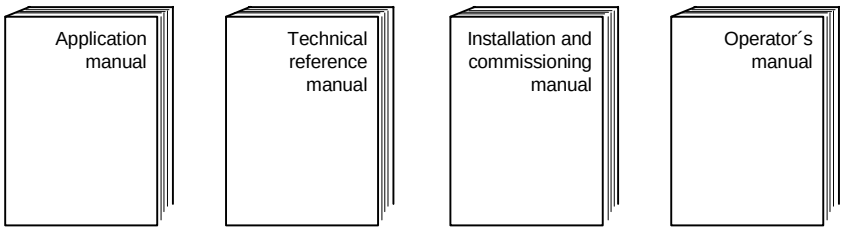

The Application Manual (AM) contains descriptions, such as application and functionality descriptions as well as setting calculation examples sorted per function. The application manual should be used when designing and engineering the protection terminal to find out when and for what a typical protection function could be used. The manual should also be used when calculating settings and creating configurations.

The Technical Reference Manual (TRM) contains technical descriptions, such as function blocks, logic diagrams, input and output signals, setting parameter tables and technical data sorted per function. The technical reference manual should be used as a technical reference during the engineering phase, installation and commissioning phase and during the normal service phase.

The Operator´s Manual (OM) contains instructions on how to operate the protection terminal during normal service (after commissioning and before periodic maintenance tests). The operator´s manual could be used to find out how to handle disturbances or how to view calculated and measured network data in order to determine the reason of a fault.

The Installation and Commissioning Manual (ICM) contains instructions on how to install and commission the protection terminal. The manual can also be used as a reference if a periodic test is performed. The manual covers procedures for mechanical and electrical installation, energising and checking of external circuitry, setting and configuration as well as verifying settings and performing a directionality test. The chapters and sections are organised in the chronological order (indicated by chapter/section numbers) the protection terminal should be installed and commissioned.

1.2 Intended audience

1.2.1 General

The application manual is addressing the system engineer/technical responsible who is responsible for specifying the application of the terminal.

1.2.2 Requirements

The system engineer/technical responsible must have a good knowledge about protection systems, protection equipment, protection functions and the configured functional logics in the protection.

1.3 Related documents

Documents related to REL 511-C1*2.3	Identity number
Operator's manual	1MRK 506 096-UEN
Installation and commissioning manual	1MRK 506 098-UEN
Technical reference manual	1MRK 506 097-UEN
Application manual	1MRK 506 116-UEN
Technical overview brochure	1MRK 506 095-BEN

1.4 Revision notes

Revision	Description
2.3-00	First revision

Chapter 2 General

About this chapter

This chapter describes the terminal in general.

1 Features

- Versatile local human-machine interface (HMI)
- Simultaneous dual protocol serial communication facilities
- Extensive self-supervision with internal event recorder
- Time synchronization with 1 ms resolution
- Four independent groups of complete setting parameters
- Powerful software ‘tool-box’ for monitoring, evaluation and user configuration
- Pre-configured protection terminal for cost-effective engineering and commissioning
- Compact half 19" case size
- Full scheme phase-to-phase and phase-to-earth distance protection with:
  - general fault criterion (impedance and/or current based)
  - five zones
- Non-directional and directional phase and residual overcurrent protection
- One- two- and three-pole tripping and automatic reclosing
- Synchro- and energizing-check
- Disturbance and event recording functions
- Fault locator

2 Application

The main purpose of the REL 511-C1 terminal is the protection, control and monitoring of overhead lines and cables in solidly grounded interconnected distribution and sub-transmission networks. It can also be used in interconnected transmission networks up to the highest voltage levels. The terminal is intended for one- and three-pole tripping applications, and is suitable for the protection of heavily loaded lines and multi-circuit lines. It may be used for applications where the possibility of weak-end infeed conditions exist, as well as for applications which may experience power swing conditions. It may also be used for applications with or without a communications channel(s) installed, as well as for applications which must provide remote backup protection, and for applications which require directional phase and earth fault protection.

The REL 511-C1 terminal may be used as the main protection terminal in single main protection system applications, or as the second main protection terminal in dual main protection system applications up to the highest voltage levels.

3 Design

Type tested software and hardware that comply with international standards and ABB´s internal design rules together with extensive self monitoring functionality, ensure high reliability of the complete terminal.

The terminal’s closed and partly welded steel case makes it possible to fulfill the stringent EMC requirements.

All serial data communcation is via optical connections to ensure immunity against disturbances.

A fully functional terminal comprising a compact hardware, pre-selected protection, control and monitoring functions that were carefully chosen, configured and tested to meet a broad range of application requirements. This ready to connect and commission feature makes this product a cost effective solution for both new installations and the refurbishment of existing installations.

4 Requirements

4.0.1 General

The operation of a protection measuring function is influenced by distortion, and measures need to be taken in the protection to handle this phenomenon. One source of distortion is current transformer saturation. In this protection terminal, measures are taken to allow for a certain amount of CT saturation with maintained correct operation. This protection terminal can allow relatively heavy current transformer saturation.

Protection functions are also affected by transients caused by capacitive voltage transformers (CVTs) but as this protection terminal has a very effective filter for these transients, the operation is hardly affected at all.

4.0.2 Voltage transformers

Magnetic or capacitive voltage transformers can be used.

Capacitive voltage transformers (CVTs) should fulfil the requirements according to IEC 186A, Section 20, regarding transients. According to the standard, at a primary voltage drop down to zero, the secondary voltage should drop to less than 10% of the peak pre-fault value before the short circuit within one cycle.

The protection terminal has an effective filter for this transient, which gives secure and correct operation with CVTs.

4.0.3 Current transformers

Classification

The performance of the REx 5xx terminal depends on the conditions and the quality of the current signals fed to it. The terminal REx 5xx has been designed to permit relatively heavy current transformer saturation with maintained correct operation. To guarantee correct operation, the CTs must be able to correctly reproduce the current for a minimum time before the CT will begin to saturate. To fulfil the requirement on a specified time to saturation the CTs must fulfil the requirements of a minimum secondary e.m.f. that is specified below.

There are several different ways to specify CTs. Conventional magnetic core CTs are usually specified and manufactured according to some international or national standards, which specify different protection classes as well. However, generally there are three different types of current transformers:

- high remanence type CT
- low remanence type CT
- non remanence type CT

The high remanence type has no limit for the remanence flux. This CT has a magnetic core without any airgap and a remanence flux might remain for almost infinite time. In this type of transformers the remanence flux can be up to 70-80% of the saturation flux. Typical examples of high remanence type CT are class P, TPS, TPX according to IEC, class P, X according to BS (British Standard) and nongapped class C, K according to ANSI/IEEE.

The low remanence type has a specified limit for the remanence flux. This CT is made with a small airgap to reduce the remanence flux to a level that does not exceed 10% of the saturation flux. The small airgap has only very limited influence on the other properties of the CT. Class TPY according to IEC is a low remanence type CT.

The non remanence type CT has practically negligible level of remanence flux. This type of CT has relatively big airgaps in order to reduce the remanence flux to practically zero level. At the same time, these airgaps minimize the influence of the DC-component from the primary fault current. The airgaps will also reduce the measuring accuracy in the non-saturated region of operation. Class TPZ according to IEC is a non remanence type CT.

The rated equivalent limiting secondary e.m.f. E_{al} according to the IEC 60044-6 standard is used to specify the CT requirements for REx 5xx. The requirements are also specified according to other standards.

Conditions

The requirements are a result of investigations performed in our network simulator. The tests have been carried out with an analogue current transformer model with a settable core area, core length, air gap and number of primary and secondary turns. The setting of the current transformer model was representative for current transformers of high remanence and low remanence type. The results are not valid for non remanence type CTs (TPZ).

The performance of the distance protection was checked at both symmetrical and fully asymmetrical fault currents. A source with a time constant of about 120 ms was used at the tests. The current requirements below are thus applicable both for symmetrical and asymmetrical fault currents.

Both phase-to-earth, phase-to-phase and three-phase faults were tested in fault locations backward, close up forward and at the zone 1 reach. The protection was checked with regard to directionality, dependable tripping, and overreach.

All testing was made without any remanence flux in the current transformer core. The requirements below are therefore fully valid for a core with no remanence flux. It is difficult to give general recommendations for additional margins for remanence flux. They depend on the reliability and economy requirements.

When current transformers of low remanence type (TPY) are used, practically no additional margin is needed.

For current transformers of high remanence type (e.g. TPX), the small probability of a fully asymmetrical fault, together with maximum remanence flux in the same direction as the flux generated by the fault, has to be kept in mind at the decision of an additional margin. Fully asymmetrical fault current will be achieved when the fault occurs at zero voltage (0°). Investigations have proved that 95% of the faults in the network will occur when the voltage is between 40° and 90°.

Fault current

The current transformer requirements are based on the maximum fault current for faults in different positions. Maximum fault current will occur for three-phase faults or single-phase-to-earth faults. The current for a single phase-to-earth fault will exceed the current for a three-phase fault when the zero sequence impedance in the total fault loop is less than the positive sequence impedance.

When calculating the current transformer requirements, maximum fault current should be used and therefore both fault types have to be considered.

Cable resistance and additional load

The current transformer saturation is directly affected by the voltage at the current transformer secondary terminals. This voltage, for an earth fault, is developed in a loop containing the phase and neutral conductor, and relay load. For three-phase faults, the neutral current is zero, and only the phase conductor and relay phase load have to be considered.

In the calculation, the loop resistance should be used for phase-to-earth faults and the phase resistance for three-phase faults.

Current transformer requirements for CTs according to the IEC 60044-6 standard

The current transformer ratio should be selected so that the current to the protection is higher than the minimum operating value for all faults that are to be detected. The minimum operating current is 10-30% of the nominal current.

All current transformers of high remanence and low remanence type that fulfil the requirements on the rated equivalent secondary e.m.f. E_{al} below can be used. The current transformers should have an accuracy class comparable to 5P or better. The characteristic of the non remanence type CT (TPZ) is not well defined as far as the phase angle error is concerned, and we therefore recommend contacting ABB Automation Products AB to confirm that the type in question can be used.

The current transformers must have a rated equivalent secondary e.m.f. E_{al} that is larger than the maximum of the required secondary e.m.f. E_{alreq} below:

$$E_{al} > E_{alreq} = \frac{I_{kmax} \cdot I_{sn}}{I_{pn}} \cdot a \cdot \left(R_{CT} + R_L + \frac{0.25}{I^2_R} \right)$$

(Equation 1)

$$E_{al} > E_{alreq} = \frac{I_{kzone1} \cdot I_{sn}}{I_{pn}} \cdot k \cdot \left(R_{CT} + R_L + \frac{0.25}{I^2_R} \right)$$

(Equation 2)

where

I_{kmax} Maximum primary fundamental frequency current for close-in forward and reverse faults (A)

I_{kzone1} Maximum primary fundamental frequency current for faults at the end of zone 1 reach (A)

I_{pn} The rated primary CT current (A)

I_{sn} The rated secondary CT current (A)

I_R The protection terminal rated current (A)

R_{CT} The secondary resistance of the CT (Ω)

R_L The resistance of the secondary cable and additional load (Ω). The loop resistance should be used for phase-to-earth faults and the phase resistance for three-phase faults.

a This factor is a function of the network frequency and the primary time constant for the dc component in the fault current, see figure 1.

k A factor of the network frequency and the primary time constant for the dc component in the fault current for a three-phase fault at the set reach of zone 1, see figure2. The time constant is normally less than 50 ms.

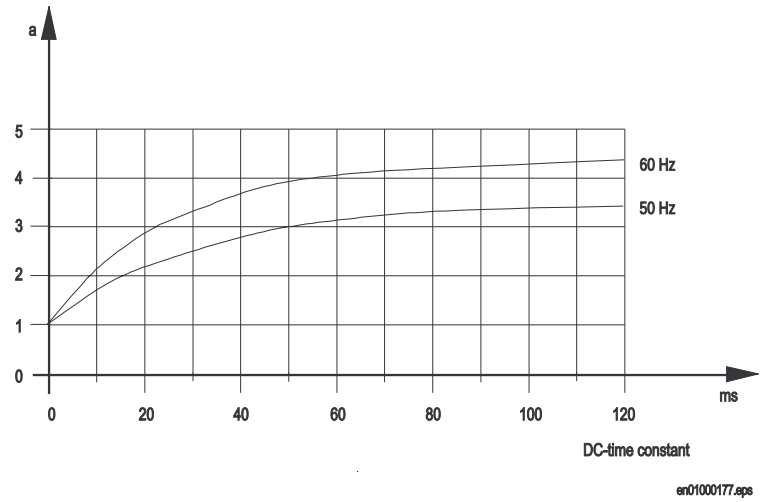

Figure 1: Factor a as a function of the frequency and the time constant

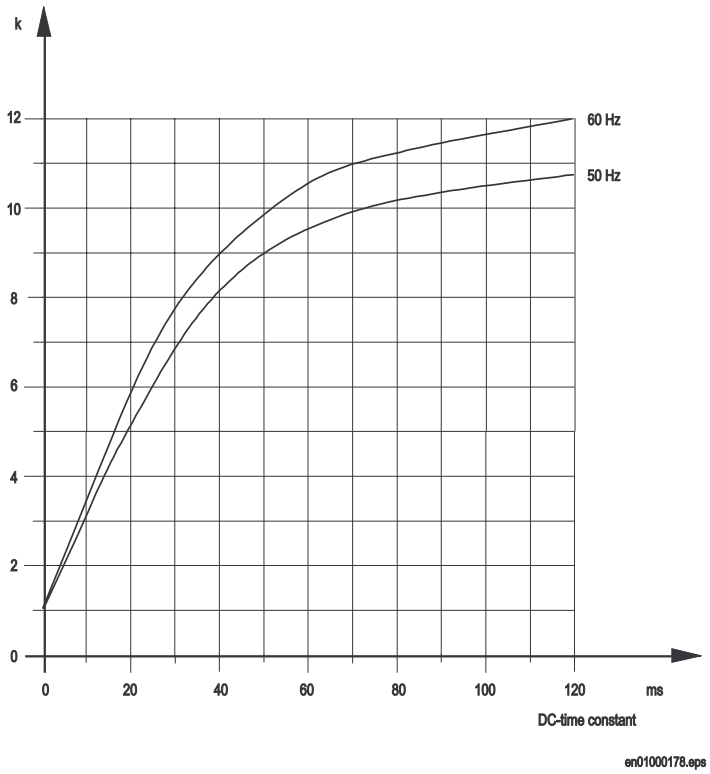

Figure 2: Factor k as a function of the frequency and the time constant

Current transformer requirements for CTs according to other standards

All kinds of conventional magnetic core CTs are possible to be used with REx 5xx terminals if they fulfil the requirements that correspond to the above specified according to the IEC 60044-6 standard. From the different standards and available data for relaying applications it is possible to approximately calculate a secondary e.m.f. of the CT. It is then possible to compare this to the required secondary e.m.f. E_{alreq} and judge if the CT fulfils the requirements. The requirements according to some other standards are specified below.

Current transformer according to IEC 60044-1

A CT according to IEC 60044-1 is specified by the secondary limiting e.m.f. E_{2max}. The value of the E_{2max} is approximately equal to E_{al} according to IEC 60044-6.

$$E_{al} \approx E_{2max}$$

(Equation 3)

The current transformers must have a secondary limiting e.m.f. E_{2max} that fulfills the following:

$$E_{2max} > \text{maximum of } E_{alreq}$$

(Equation 4)

Current transformer according to British Standard (BS)

A CT according to BS is often specified by the rated knee-point e.m.f. E_{kneeBS}. The value of the E_{kneeBS} is lower than E_{al} according to IEC 60044-6. It is not possible to give a general relation between the E_{kneeBS} and the E_{al} but normally the E_{kneeBS} is 80 to 85% of the E_{al} value. Therefore, the rated equivalent limiting secondary e.m.f. E_{alBS} for a CT specified according to BS can be estimated to:

$$E_{alBS} \approx 1.2 \cdot E_{kneeBS}$$

(Equation 5)

The current transformers must have a rated knee-point e.m.f. E_{kneeBS} that fulfills the following:

$$1.2 \cdot E_{kneeBS} > \text{maximum of } E_{alreq}$$

(Equation 6)

Current transformer according to ANSI/IEEE

A CT according to ANSI/IEEE is specified in a little different way. For example a CT of class C has a specified secondary terminal voltage U_{ANSI}. There is a few standardized value of U_{ANSI} (e.g. for a C400 the U_{ANSI} is 400 V). The rated equivalent limiting secondary e.m.f. E_{alANSI} for a CT specified according to ANSI/IEEE can be estimated as follows:

$$E_{alANSI} = \left|20 \cdot I_{sn} \cdot R_{CT} + U_{ANSI}\right| = \left|20 \cdot I_{sn} \cdot R_{CT} + 20 \cdot I_{sn} \cdot Z_{bANSI}\right|$$

(Equation 7)

where

Z_{bANSI} The impedance (i.e. complex quantity) of the standard ANSI burden for the specific C class (Ω)

U_{ANSI} The secondary terminal voltage for the specific C class (V)

The CT requirements are fulfilled if:

$$E_{alANSI} > \text{maximum of } E_{alreq}$$

(Equation 8)

Often an ANSI/IEEE CT also has a specified knee-point voltage $U_{kneeANSI}$. This is graphically defined from the excitation curve. The knee-point according to ANSI/IEEE has normally a lower value than the knee-point according to BS. The rated equivalent limiting secondary e.m.f. E_{alANSI} for a CT specified according to ANSI/IEEE can be estimated to:

$$E_{alANSI} \approx 1.3 \cdot U_{kneeANSI}$$

(Equation 9)

The current transformers must have a knee-point voltage $U_{kneeANSI}$ that fulfills the following:

$1.3 \cdot U_{kneeANSI} >$ maximum of E_{alreq}

5 Terminal identification

5.1 Application

Serial number, software version and the identification names and numbers for the station, the object and the terminal (unit) itself can be stored in the REx 5xx terminal. Also the serial numbers of included modules are stored in the terminal. This information can be read on the local HMI or when communicating with the terminal through a PC or with SMS/SCS.

The base currents, voltages and rated frequency must be set since the values affect many functions. The input transformers ratio must be set as well. The ratio for the current and the voltage transformer automatically affects the measuring functions in the terminal.

The internal clock is used for time tagging of:

- Internal events
- Disturbance reports
- Events in a disturbance report
- Events transmitted to the SCS substation control system

This implies that the internal clock is very important. The clock can be synchronized (see Time synchronization) to achieve higher accuracy of the time tagging. Without synchronization, the internal clock is useful for comparisons among events within the REx 5xx terminal.

5.2 Calculations

Uxr and Ixr (x = 1-5) are the rated voltage and current values for the analog input transformers within the REx 5xx terminal. UxScale and IxScale are the actual ratio for the main protection transformer at the protected object. These values will be used to calculate the present voltage and current in the protected object. Uxb and Ixb defines base voltage and current values, used to define the per-unit system used in the terminal for calculation of setting values.

The current transformer secondary current (Is_{SEC}) is:

$$Is_{SEC} = \frac{I_{SEC}}{I_{PRIM}} \cdot Is$$

(Equation 10)

where:

I_{SEC} = secondary rated current of the main CT

I_{PRIM} = primary rated current of the main CT

Is = primary setting value of the current

The relay setting value IP>> is given in percentage of the secondary base current value, Ixb, associated to the current transformer input Ix:

$$IP>> = \frac{Is_{SEC}}{Ixb} \cdot 100$$

(Equation 11)

The value of Ixb can be calculated as:

$$Ixb = \frac{\text{Rated primary current}}{\text{CT ratio}}$$

(Equation 12)

Chapter 3 Common functions

About this chapter

This chapter presents the common functions in the terminal.

1 Time synchronisation (TIME)

1.1 Application

Use time synchronisation to achieve a common time base for the terminals in a protection and control system. This makes comparision of events and disturbance data between all terminals in the system possible.

Time-tagging of internal events and disturbances is an excellent help when evaluating faults. Without time synchronisation, only the events within the terminal can be compared to one another. With time synchronisation, events and disturbances within the entire station, and even between line ends, can be compared during an evaluation.

1.2 Functionality

Two main alternatives of external time synchronisation is available. Either the synchronisation message is applied via any of the communication ports of the terminal as a telegram message including date and time, or as a minute pulse, connected to a binary input. The minute pulse is used to fine tune already existing time in the terminals.

The REx 5xx terminal has its own internal clock with date, hour, minute, second and millisecond. It has a resolution of 1 ms.

The clock has a built-in calendar for 30 years that handles leap years. Any change between summer and winter time must be handled manually or through external time synchronisation. The clock is powered by a capacitor, to bridge interruptions in power supply without malfunction.

The internal clock is used for time-tagging disturbances, events in Substation monitoring system (SMS) and Substation control system (SCS), and internal events.

1.3 Calculations

The internal time can be set on the local human-machine interface (HMI) at:

Settings
Time

The time is set with year, month, day and time.

The source of the time synchronisation is set on the local HMI at:

Configuration

Time

When the setting is performed on the local HMI, the parameter is called TimeSync-Source. The time synchronisation source can also be set from the CAP 531 tool. The setting parameter is then called SYNCSCR. The setting alternatives are:

- None (no synchronisation)
- LON
- SPA
- IEC
- Minute pulse positive flank
- Minute pulse negative flank

The function input to be used for minute-pulse synchronisation is called TIME-MIN-SYNC.

The internal time can be set manually down to the minute level, either via the local HMI or via any of the communication ports. The time synchronisation fine tunes the clock (seconds and milliseconds). If no clock synchronisation is active, the time can be set down to milliseconds.

2 Setting group selector (GRP)

2.1 Application

Different conditions in networks of different voltage levels require high adaptability of the used protection and control units to best provide for dependability, security and selectivity requirements. Protection units operate with higher degree of availability, especially, if the setting values of their parameters are continuously optimised regarding the conditions in power system.

The operational departments can plan different operating conditions for the primary equipment. The protection engineer can prepare in advance for the necessary optimised and pre-tested settings for different protection functions. Four different groups of setting parameters are available in the REx 5xx terminals. Any of them can be activated automatically through up to four different programmable binary inputs by means of external control signals.

2.2 Functionality

Select a setting group by using the local HMI, from a front connected personal computer, remotely from the station control or station monitoring system or by activating the corresponding input to the GRP function block.

Each input of the function block is configurable to any of the binary inputs in the terminal. Configuration must be performed under the menu:

Configuration
Functions
Active Group
FuncInputs

Use external control signals to activate a suitable setting group when adaptive functionality is necessary. Input signals that should activate setting groups must be either permanent or a pulse longer than 200 ms.

More than one input may be activated simultaneously. In such cases the lower order setting group has priority. This means that if for example both group four and group two are set to activate, group two will be the one activated.

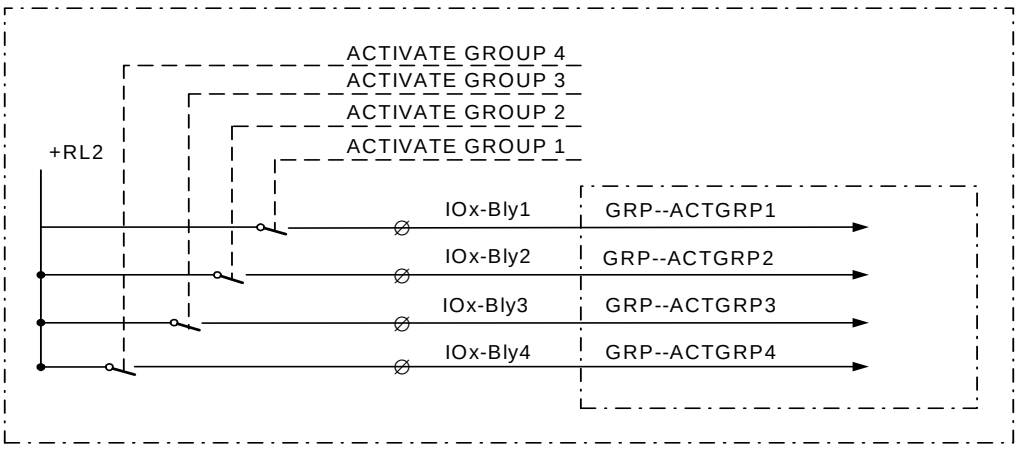

en01000144.vsd

2.3 Design

The GRP function block has four functional inputs, each corresponding to one of the setting groups stored within the terminal. Activation of any of these inputs changes the active setting group. Four functional output signals are available for configuration purposes, so that continuous information on active setting group is available.

3 Setting lockout (HMI)

3.1 Application

Unpermitted or uncoordinated changes by unauthorized personnel may cause severe damage to primary and secondary power circuits. Use the setting lockout function to prevent unauthorized setting changes and to control when setting changes are allowed.

By adding a key switch connected to a binary input a simple setting change control circuit can be built simply allowing only authorized keyholders to make setting changes. Security can be increased by adding SA/SMS overrides that prevents changes even by keyholders.

3.2 Functionality

Activating the setting restriction prevents unauthorized personell to purposely or by mistake change terminal settings.

The HMI--BLOCKSET functional input is configurable only to one of the available binary inputs of a REx 5xx terminal. For this reason, the terminal is delivered with the default configuration, where the HMI--BLOCKSET signal is connected to NONE-NOSIGNAL.

The function permits remote changes of settings and reconfiguration through the serial communication ports. The setting restrictions can be activated only from the local HMI.

All other functions of the local human-machine communication remain intact. This means that an operator can read all disturbance reports and other information and setting values for different protection parameters and the configuration of different logic circuits.

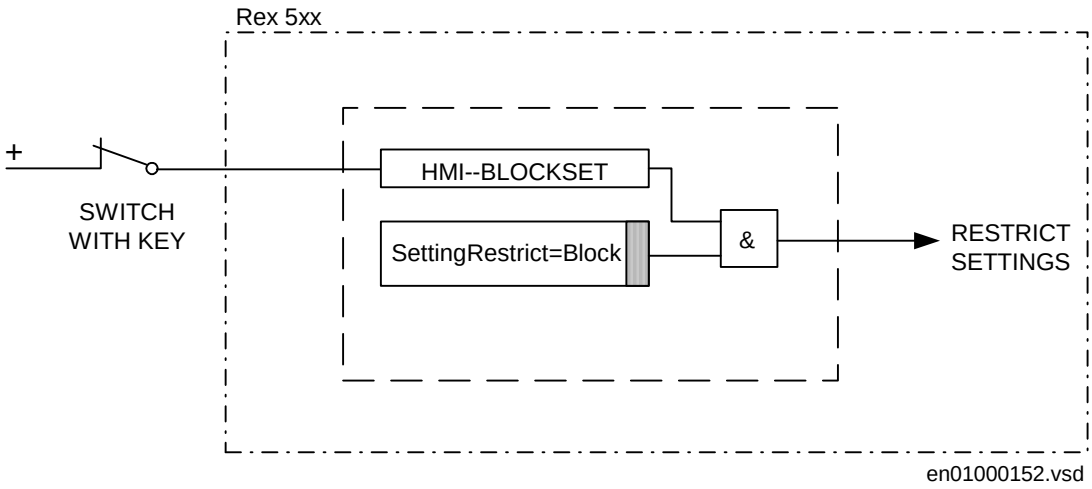

Figure 3: Connection and logic diagram for the BLOCKSET function

4 I/O system configurator (IOP)

4.1 Application

The I/O system configurator must be used in order to recognize added modules and to create internal adress mappings between modules and protections and other functions.

4.2 Functionality

The I/O system configurator is used to add, remove or move I/O modules in the REx 5xx terminals. To configure means to connect the function blocks that represent each I/O module (BIM, BOM, IOM, IOPSM, DCM and MIM) to a function block for the I/O positions (IOP1) that represent the physical slot in the rack.

Available I/O modules are:

- BIM, *B*inary *I*nput *M*odule with 16 binary input channels.
- BOM, *B*inary *O*utput *M*odule with 24 binary output channels.
- IOM, *I*nput/*O*utput *M*odule with 8 binary input and 12 binary output channels.
- MIM, *m*A *I*nput *M*odule with six analog input channels.
- IOPSM, *I*nput *O*utput *Power S*upply *M*odule with four inputs and four outputs.
- DCM, *D*ata *C*ommunication *M*odule. The only software configuration for this module is the I/O Position input.

An REx 5xx terminal houses different numbers of modules depending of the casing size and which kind of modules chosen.

- The 1/1 of 19-inch size casing houses a maximum of 13 modules. But when Input/Output- or Output modules are included, the maximum of these modules are six. The maximum number of mA Input modules are also limited to six.
- The 3/4-size casing houses a maximum of eight modules. The limitation is four modules for Input/Output- or Output modules. The maximum number of mA Input modules are three.
- The 1/2-size casing houses a maximum of three binary modules or one analogue mA Input module.

It is possible to fit modules of different types in any combination in a terminal, but the total maximum numbers of modules must be considered.

Each I/O-module can be placed in any CAN-I/O slot in the casing with one exception. The DCM-module has a fixed slot position which depends on the size of the casing.

To add, remove or move modules in the terminal, the reconfiguration of the terminal must be done from the graphical configuration tool CAP 531.

Users refer to the CAN-I/O slots by the physical slot numbers of the CAN-I/O slots, which also appear in the terminal drawings.

If the user-entered configuration does not match the actual configuration in the terminal, an error output is activated on the function block, which can be treated as an event or alarm.

The BIM, BOM, IOM, IOPSM and DCM share the same communication addresses for parameters and configuration. So they must share I/O module 1-13 (IOxx), which are the same function block. A user-configurable function selector per I/O module function block determines which type of module it is.

All names for inputs and outputs are inputs on the function blocks and must be set from the graphical tool CAP 531.

I/O position

The IOP1 (I/O position) function block is the same for the different casings, independent of the number of slots available. Anyway, it looks different depending of actual configuration. All necessary configuration is done in the CAP 531 configuration tool.

The Sxx outputs are connected to the POSITION inputs of the I/O Modules and MIMs.

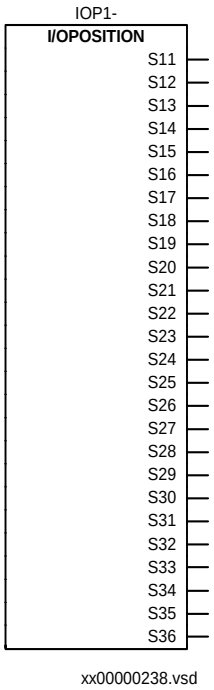

Figure 4: Function block of the I/O position block (IOP1-).

Configuration

The I/O-configuration can only be performed from CAP 531, the graphical configuration tool.

To configure from the graphical tool:

- First, set the function selector for the logical I/O module to the type of I/O module that is used, BIM, BOM, IOM, IOPSM or DCM.
- Secondly, connect the POSITION input of the logical I/O module to a slot output of the IOP function block.

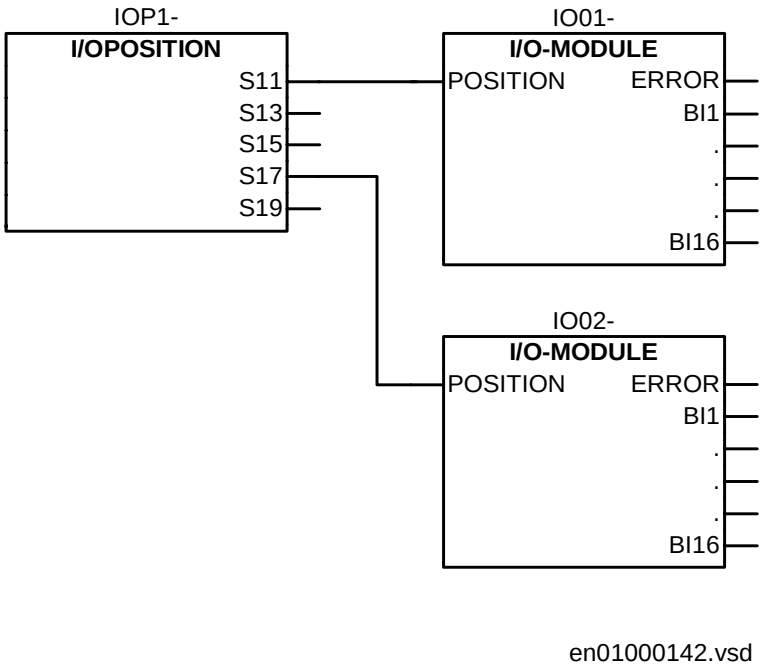

Figure 5: Example of an I/O-configuration in the graphical tool CAP 531 for a REx 5xx with two BIMs.

5 Logic function blocks

5.1 Application

5.1.1 Application

Different protection, control, and monitoring functions within the REx 5xx terminals are quite independent as far as their configuration in the terminal is concerned. The user cannot enter and change the basic algorithms for different functions, because they are located in the digital signal processors and extensively type tested. The user can configure different functions in the terminals to suit special requirements for different applications.

For this purpose, additional logic circuits are needed to configure the terminals to meet user needs and also to build in some special logic circuits, which use different logic gates and timers.

5.2 Functionality

Inverter (INV)

The INV function block is used to invert the input boolean variable. The function block (figure 6) has one input designated IVnn-INPUT where nn presents the serial number of the block. Each INV circuit has one output IVnn-OUT.

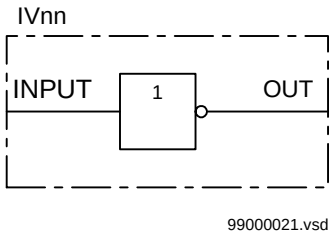

Figure 6: Function block diagram of the inverter (INV) function

Table 1: Truth table for the INV function block

INPUT	OUT
1	0
0	1

Controllable gate (GT)

The GT function block is used for controlling if a signal should be able to pass or not depending on a setting. The function block (figure 7) has one input, designated GTnn-INPUT, where nn presents the serial number of the block. Each GT circuit has one output, GTnn-OUT. Each gate further has a Operation On/Off which controls if the INPUT is passed to the OUT or not.

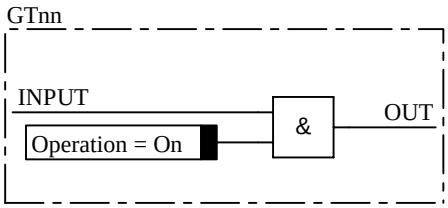

Figure 7: Function block diagram of the controllable gate (GT) function

The output signal from the GT function block is set to 1 if the input signal is 1 and Operation = On elsewhere it is set to 0. See truth table below.

Table 2: Truth table for the GT function block

INPUT	Operation	OUT
0	Off	0
1	Off	0
0	On	0
1	On	1

OR

OR function blocks are used to form general combinatory expressions with boolean variables. The function block (figure 8) has six inputs, designated Onnn-INPUTm, where nnn presents the serial number of the block, and m presents the serial number of the inputs in the block. Each OR circuit has two outputs, Onnn-OUT and Onnn-NOUT (inverted).

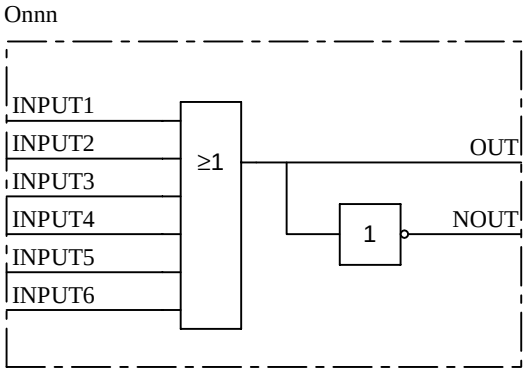

Figure 8: Function block diagram of the OR function

The output signal (OUT) is set to 1 if any of the inputs (INPUT1-6) is 1. See truth table below.

Table 3: Truth table for the OR function block

INPUT1	INPUT2	INPUT3	INPUT4	INPUT5	INPUT6	OUT	NOUT
0	0	0	0	0	0	0	1
0	0	0	0	0	1	1	0
0	0	0	0	1	0	1	0
...	...	...	...	...	...	1	0
1	1	1	1	1	0	1	0
1	1	1	1	1	1	1	0

AND

AND function blocks are used to form general combinatory expressions with boolean variables. The function block (figure 9) has four inputs (one of them inverted), designated Annn-INPUTm (Annn-INPUT4N is inverted), where nnn presents the serial number of the block, and m presents the serial number of the inputs in the block. Each AND circuit has two outputs, Annn-OUT and Annn-NOUT (inverted).

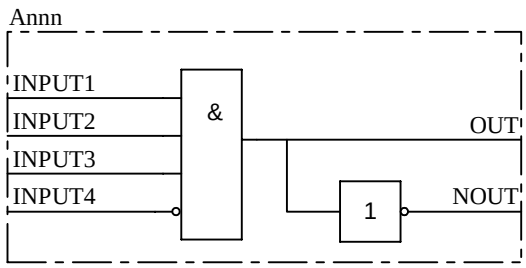

Figure 9: Function block diagram of the AND function

The output signal (OUT) is set to 1 if the inputs INPUT1-3 are 1 and INPUT4N is 0. See truth table below.

Table 4: Truth table for the OR function block

INPUT1	INPUT2	INPUT3	INPUT4N	OUT	NOUT
0	0	0	1	0	1
0	0	1	1	0	1
0	1	0	1	0	1
0	1	1	1	0	1
1	0	0	1	0	1
1	0	1	1	0	1
1	1	0	1	0	1
1	1	1	1	0	1
0	0	0	0	0	1
0	0	1	0	0	1
0	1	0	0	0	1
0	1	1	0	0	1
1	0	0	0	0	1
1	0	1	0	0	1
1	1	0	0	0	1
1	1	1	0	1	0

Timer

The function block TM timer has outputs for delayed input signal at drop-out and at pick-up. The timer (figure 10) has a settable time delay TMnn-T between 0.00 and 60.00 s in steps of 0.01 s. The input signal for each time delay block has the designation TMnn-INPUT, where nn presents the serial number of the logic block. The output signals of each time delay block are TMnn-ON and TMnn-OFF. The first one belongs to the timer delayed on pick-up and the second one to the timer delayed on drop-out. Both timers within one block always have the same setting.

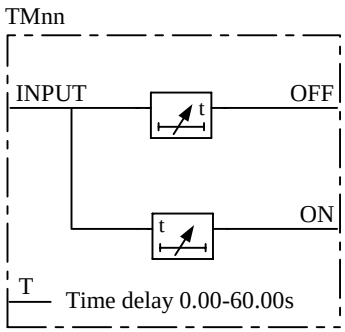

Figure 10: Function block diagram of the Timer function

The function block TL timer (figure 11) with extended maximum time delay at pick-up and at drop-out, is identical with the TM timer. The difference is the longer time delay TLnn-T, settable between 0.0 and 90000.0 s in steps of 0.1 s.

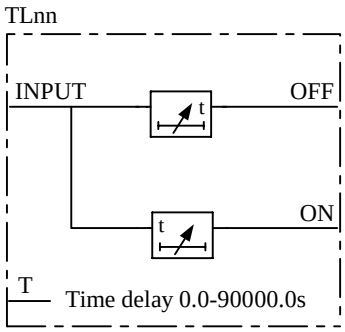

Figure 11: Function block diagram of the TimerLong function

The input variable to INPUT is obtained delayed a settable time T at output OFF when the input variable changes from 1 to 0 in accordance with the time pulse diagram, figure 12. The output OFF signal is set to 1 immediately when the input variable changes from 0 to 1.

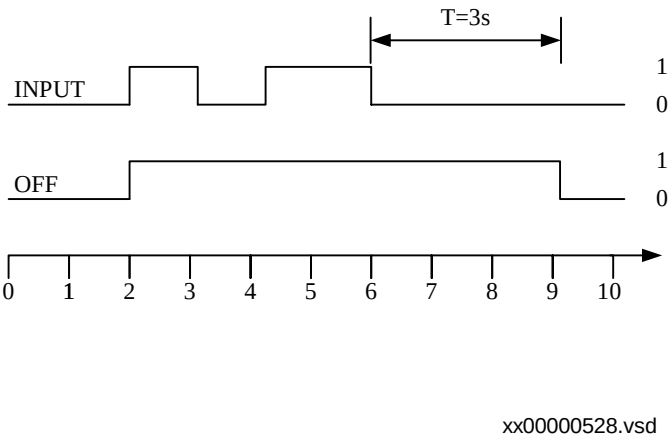

Figure 12: Example of time diagram for a timer delayed on drop-out with preset time T = 3 s

The input variable to INPUT is obtained delayed a settable time T at output ON when the input variable changes from 0 to 1 in accordance with the time pulse diagram, figure 13. The output ON signal returns immediately when the input variable changes from 1 to 0.

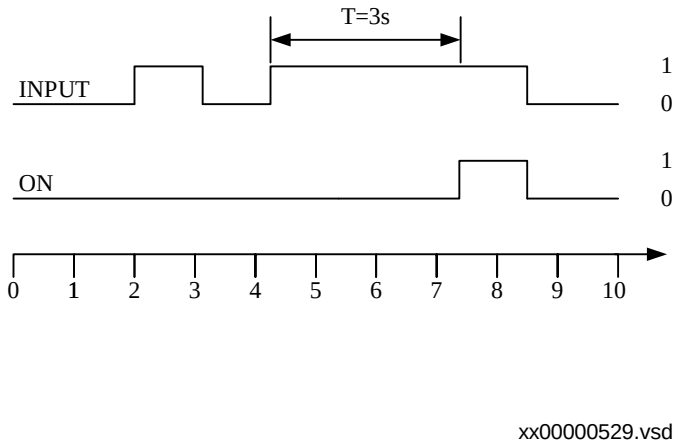

Figure 13: Example of time diagram for a timer delayed on pick-up with preset time T = 3 s

If more timers than available in the terminal are needed, it is possible to use pulse timers with AND or OR logics. Figure 14 shows an application example of how to realize a timer delayed on pick-up. Figure 15 shows the realization of a timer delayed on drop-out. Note that the resolution of the set time must be 0.2 s, if the connected logic has a cycle time of 200 ms.

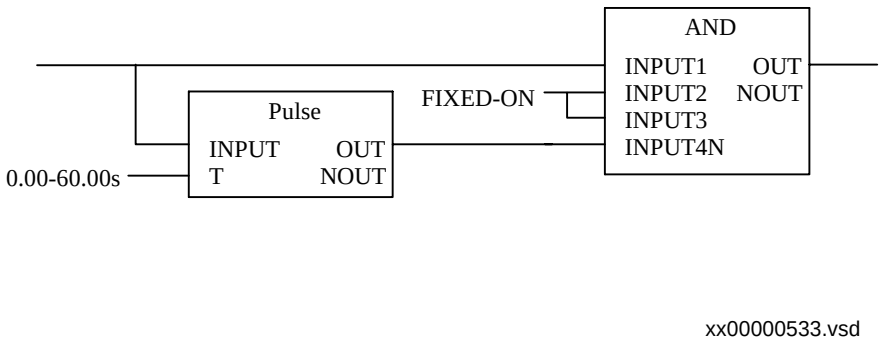

Figure 14: Realization example of a timer delayed on pick-up

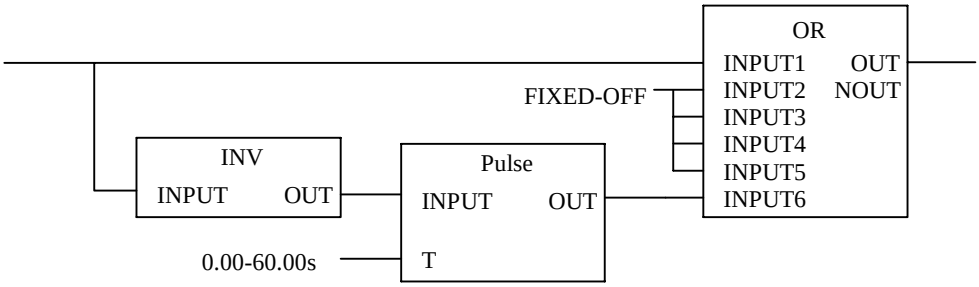

Figure 15: Realization example of a timer delayed on drop-out

Timer settable through HMI/SMS/PST

The function block TS timer has outputs for delayed input signal at drop-out and at pick-up. The timer (figure 16) has a settable time delay TSnn-T between 0.00 and 60.00 s in steps of 0.01 s. It also has an Operation setting On, Off which controls the operation of the timer.The input signal for each time delay block has the designation TSnn-INPUT, where nn presents the serial number of the logic block. The output signals of each time delay block are TSnn-ON and TSnn-OFF. The first one belongs to the timer delayed on pick-up and the second one to the timer delayed on drop-out. Both timers within one block always have the same setting.

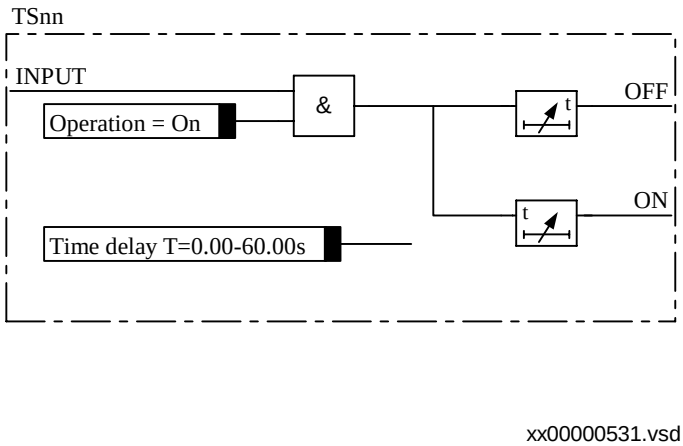

Figure 16: Function block diagram of the Settable timer function

For details about the function see the description of TM Timer.

Pulse

The pulse function can be used, for example, for pulse extensions or limiting of operation of outputs. The pulse timer TP (figure 17) has a settable length of a pulse between 0.00 s and 60.00 s in steps of 0.01 s. The input signal for each pulse timer has the designation TPnn-INPUT, where nn presents the serial number of the logic block. Each pulse timer has one output, designated by TPnn-OUT. The pulse timer is not retriggable, that is, it can be restarted first after that the time T has elapsed.

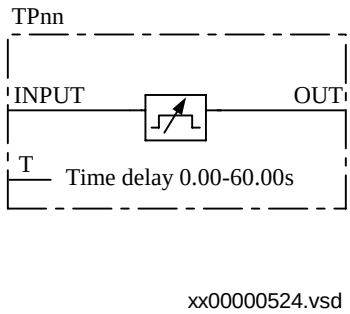

Figure 17: Function block diagram of the Pulse function

The function block TQ pulse timer (figure 18) with extended maximum pulse length, is identical with the TP pulse timer. The difference is the longer pulse length TQnn-T, settable between 0.0 and 90000.0 s in steps of 0.1 s.

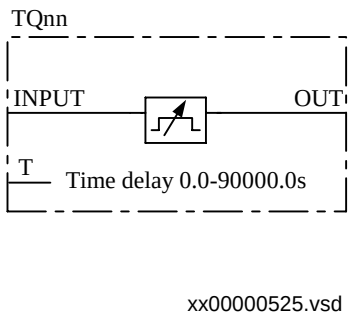

Figure 18: Function block diagram of the PulseLong function, TQ

A memory is set when the input INPUT is set to 1. The output OUT then goes to 1. When the time set T has elapsed, the memory is cleared and the output OUT goes to 0. If a new pulse is obtained at the input INPUT before the time set T has elapsed, it does not affect the timer. Only when the time set has elapsed and the output OUT is set to 0, the pulse function can be restarted by the input INPUT going from 0 to 1. See time pulse diagram, figure 19.

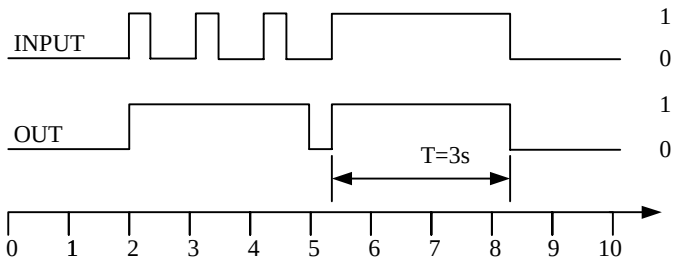

Figure 19: Example of time diagram for the pulse function with preset pulse length T = 3 s

Exclusive OR (XOR)

The function block exclusive OR (XOR) is used to generate combinatory expressions with boolean variables. XOR (figure 20) has two inputs, designated XOnn-INPUTm, where nn presents the serial number of the block, and m presents the serial number of the inputs in the block. Each XOR circuit has two outputs, XOnn-OUT and XOnn-NOUT (inverted). The output signal (OUT) is 1 if the input signals are different and 0 if they are equal.

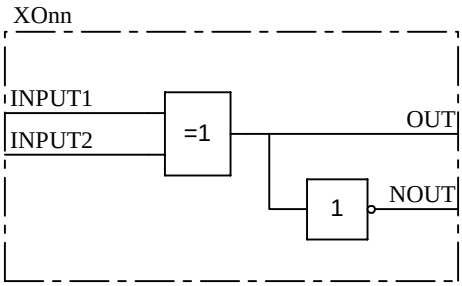

xx00000517.vsd

Figure 20: Function block diagram of the XOR function

The output signal (OUT) is set to 1 if the input signals are different and to 0 if they are equal. See truth table below.

Table 5: Truth table for the XOR function block

INPUT1	INPUT2	OUT	NOUT
0	0	0	1
0	1	1	0
1	0	1	0
1	1	0	1

Set-Reset (SR)

The function block Set-Reset (SR) (figure 21) has two inputs, designated SRnn-SET and SRnn-RESET, where nn presents the serial number of the block. Each SR circuit has two outputs, SRnn-OUT and SRnn-NOUT (inverted). The output (OUT) is set to 1 if the input (SET) is set to 1 and if the input (RESET) is 0. If the reset input is set to 1, the output is unconditionally reset to 0.

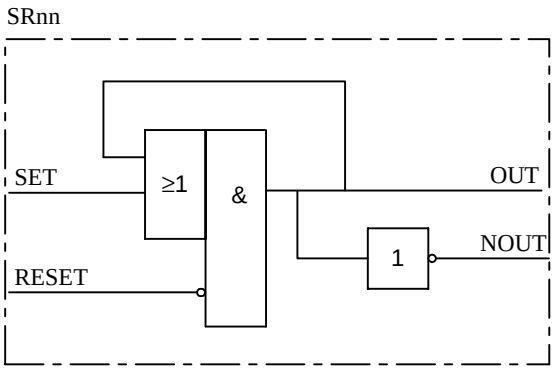

Figure 21: Function block diagram of the Set-Reset function

Set-Reset with/without memory (SM)

The function block Set-Reset (SM) (figure 22) with/without memory has two inputs, designated SMnn-SET and SMnn-RESET, where nn presents the serial number of the block. Each SM circuit has two outputs, SMnn-OUT and SMnn-NOUT (inverted). The output (OUT) is set to 1 if the input (SET) is set to 1 and if the input (RESET) is 0. If the reset input is set to 1, the output is unconditionally reset to 0. The memory setting controls if the flip-flop after a power interruption will return to the state it had before or if it will be reset.

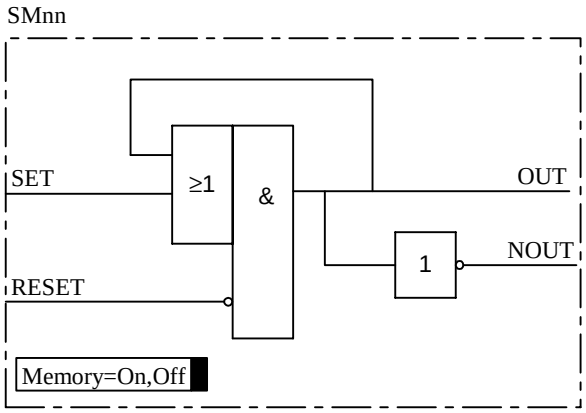

Figure 22: Function block diagram of the Set-Reset with/without memory function

5.3 Calculations

For the AND gates, OR gates, inverters, normal SR (Set-Reset) flip-flops, XOR gates and MOVE elements no settings exist.

For the normal On/Off delay timers and pulse timers the time delays and pulse lengths are set from the CAP 531 configuration tool.

Both timers in the same logic block (the one delayed on pick-up and the one delayed on drop-out) always have a common setting value. Setting values of the pulse length are independent of one another for all pulse circuits.

For the controllable gates, settable timers, SR flip-flops with/without memory the setting parameters are accessible through the HMI and SMS.

Configuration

The configuration of the logics is performed from the CAP 531 configuration tool.

Execution of functions as defined by the configurable logic blocks runs in a fixed sequence in two different cycle times, typical 6 ms and 200 ms.

For each cycle time, the function block is given an execution serial number. This is shown when using the CAP 531 configuration tool with the designation of the function block and the cycle time, for example, TMnn-(1044, 6). TMnn is the designation of the function block, 1044 is the execution serial number and 6 is the cycle time.

Execution of different function blocks within the same cycle time should follow the same order as their execution serial numbers to get an optimal solution. Always remember this when connecting in series two or more logical function blocks. When connecting function blocks with different cycle times, the MOVE function blocks can be used. These function blocks synchronize boolean signals sent between logics with slow execution time and logics with fast execution time. The MOVE functions are available as additional configurable logic circuits.

Note!

Be always careful when connecting function blocks with a fast cycle time to function blocks with a slow cycle time.

So design the logic circuits carefully and check always the execution sequence for different functions. In other cases, additional time delays must be introduced into the logic schemes to prevent errors, for example, race between functions.

6 Self supervision (INT)

6.1 Application

The REx 5xx protection and control terminals have a complex design with many included functions. The included self-supervision function and the INTernal signals function block provide good supervision of the terminal. The different safety measures and fault signals makes it easier to analyze and locate a fault.

Both hardware and software supervision is included and it is also possible to indicate possible faults through a hardware contact and/or through the software communication.

Internal events are generated by the built-in supervisory functions. The supervisory functions supervise the status of the various modules in the terminal and, in case of failure, a corresponding event is generated. Similarly, when the failure is corrected, a corresponding event is generated.

Apart from the built-in supervision of the various modules, events are also generated when the status changes for the:

- built-in real time clock (in operation/out of order).
- external time synchronization (in operation/out of order).

Events are also generated:

- whenever any setting in the terminal is changed.
- when the content of the Disturbance report is erased.

The internal events are time tagged with a resolution of 1 ms and stored in a list. The list can store up to 40 events. The list is based on the FIFO principle, that is, when it is full, the oldest event is overwritten. The list cannot be cleared and its content cannot be modified.

The list of internal events provides valuable information, which can be used during commissioning and fault tracing.

The information can only be retrieved with the aid of the SMS. The PC can be connected either to the port at the front or at the rear of the terminal.

6.2 Functionality

The self-supervision status can be monitored from the local HMI or via the PST Parameter Setting Tool or a SMS/SCS system.

Under the Terminal Report menu in the local HMI the present information from the self-supervision function can be viewed. A detailed list of supervision signals that can be generated and displayed in the local HMI is found in the Installation and Commissioning Manual.

In the PST under Terminal Report these summary signals are available:

- InternalStatus
- CPU-Status

When an internal fault has occurred, extensive information about the fault from the list of internal events can be retrieved from the PST under the menu Terminal Report - Internal Events.

A self-supervision summary can be obtained by means of the potential free alarm contact located on the power supply module. The function of this output relay is an OR-function between the INT--FAIL signal (figure 25) and a couple of more severe faults that can happen in the terminal (figure 24).

Some signals are available from the function block InternSignals (INT), see figure 23. The signals from this function block can be connected to an Event function block, which generates and sends these signals as events to the station level of the control system. The signals from the INT-function block can also be connected to binary outputs for signalization via output relays or they can be used as conditions for other functions if required/desired.

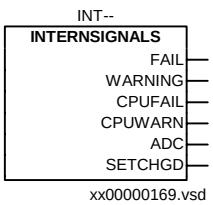

Figure 23: Function block INTernal signals.

Individual error signals from I/O modules and time synchronization can be obtained from respective function block of IOM-, BIM-, BOM-, MIM-, IOPSM-modules and from the time synchronization block TIME.

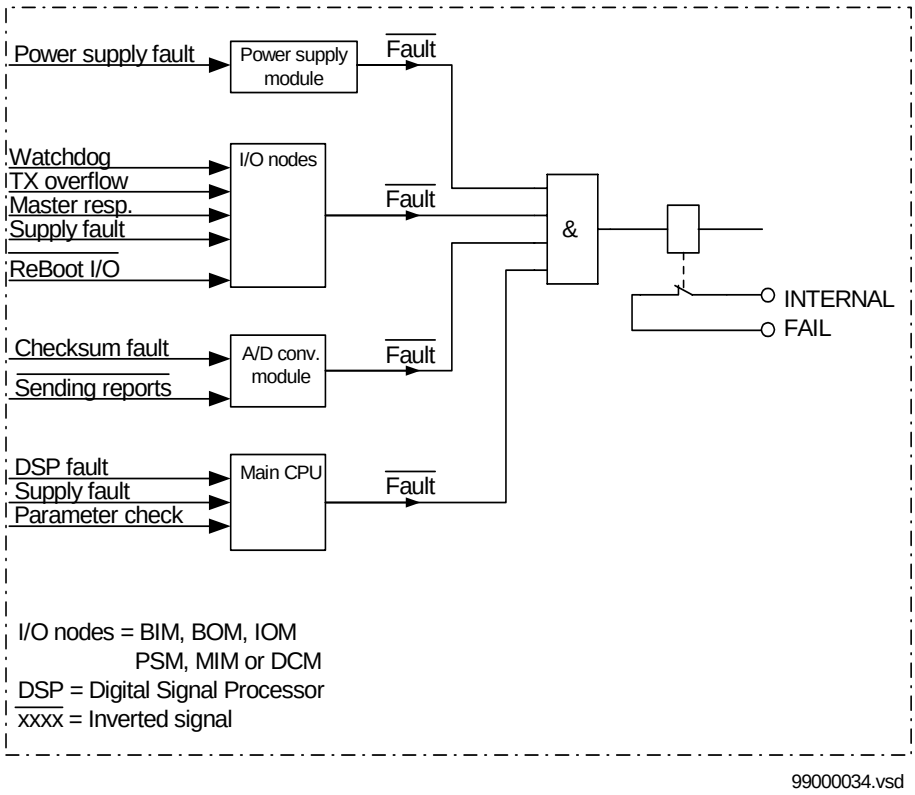

Figure 24: Hardware self-supervision, potential-free alarm contact.

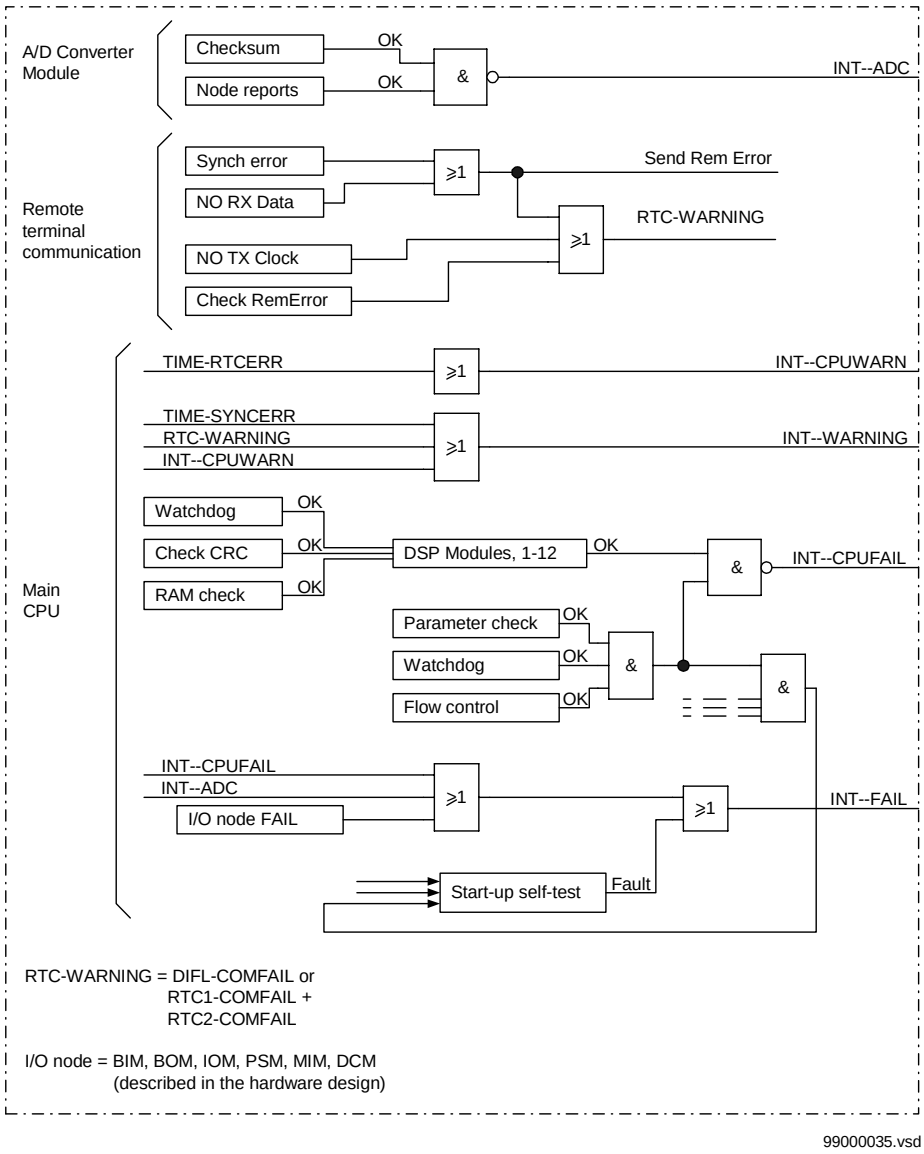

Figure 25: Software self-supervision, function block INTernal signals.

7 Blocking of signals during test

7.1 Functionality

This blocking function is only active during operation in the test mode, see example in Figure 26. When exiting the test mode, entering normal mode, this blocking is disabled and everything is set to normal operation. All testing will be done with actually set and configured values within the terminal. No settings etc. will be changed. Thus no mistakes are possible.

The blocked functions will still be blocked next time entering the test mode, if the blockings were not reset.

The blocking of a function concerns all output signals from the actual function, so no outputs will be activated.

Each of the terminal related functions is described in detail in the documentation for the actual unit. The description of each function follows the same structure (where applicable).

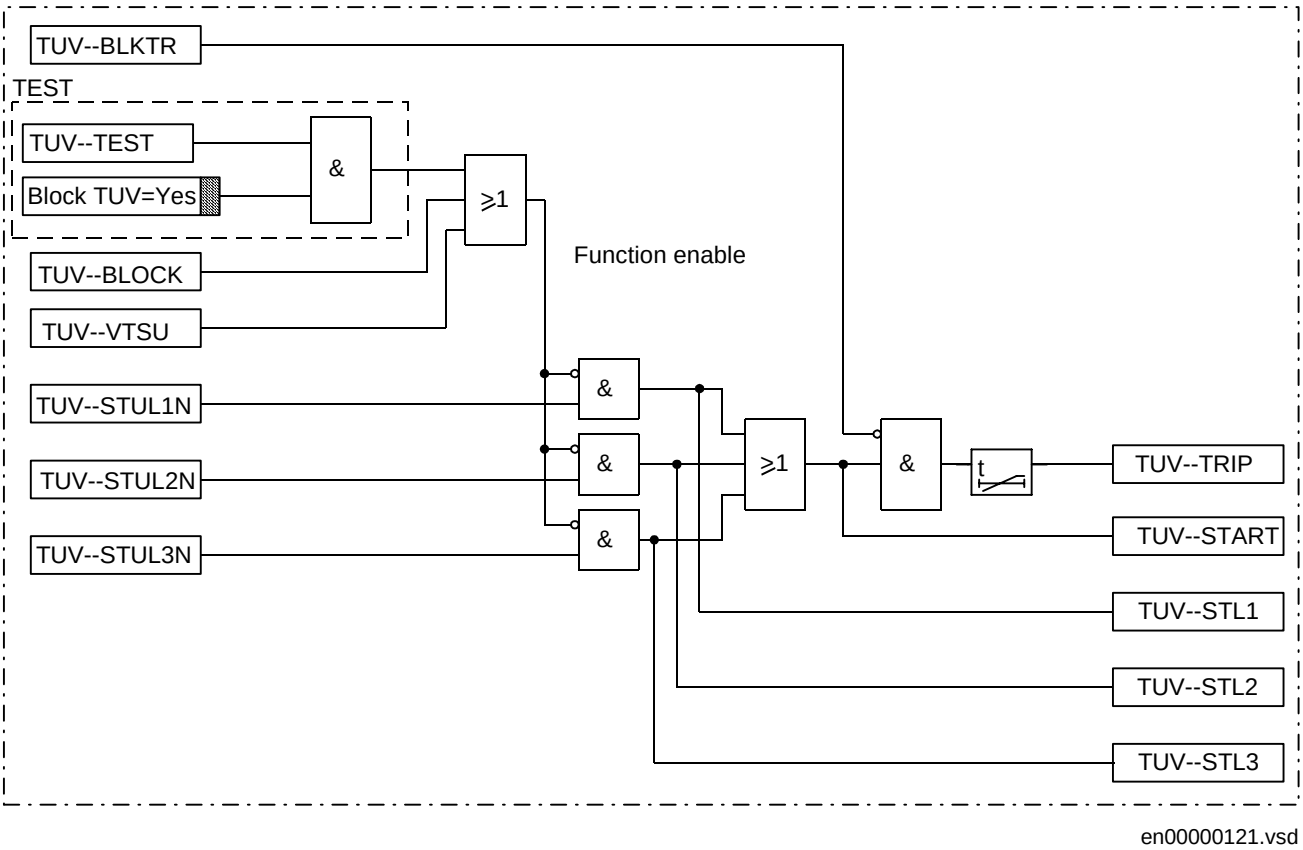

Figure 26: Example of blocking the Time delayed Under-Voltage function.

Chapter 4 Line impedance

About this chapter

This chapter describes the line impedance functions in the terminal.

1 Distance protection (ZM1-5)

1.1 Application

General

The distance protection function is the most widely spread protection function in transmission and subtransmission networks. It is also becoming increasingly important in distribution networks. The main reasons for this are:

- Its independence on communication links between the line ends, because for its operation, it uses information about the locally available currents and voltages.
- The distance protection forms a relatively selective protection system (non-unit protection system) in the power network. This means that it can also operate as a remote back-up protection for other primary elements in the network.

The basic requirements for modern line protection, such as speed, sensitivity and selectivity, with their strict requirements for dependability and security (availability), are getting more stringent. In addition, modern distance protections must be able to operate in networks with existing distance relays, which are mostly designed in a different technology (static or even electromechanical relays).

Older distance relays protect in many cases power lines only at phase-to-phase and three-phase faults. Some other protection is used for phase-to-earth faults.

The flexibility of modern distance protection is for this reason very important. This especially applies when it is used in a complex network configuration, for example, on parallel operating multicircuit lines and on multiterminal lines.

The selective operation of the distance protection does not depend on communication facilities between two line ends. At the same time, the distance protection can detect faults beyond the current transformers at the remote terminal. This functionality makes it an ideal complement to the line differential protection function that cannot detect faults beyond the current transformer at the opposite terminal.

Distance protection zones

The distance protection function in REx 5xx line protection, control, and monitoring terminals consists of three to five independent distance protection zones, each of them comprising three measuring elements for phase-to-earth (Ph-E) faults and/or three measuring elements for phase-to-phase (Ph-PH) faults. Different terminals suit different requirements in different networks on various voltage levels. For this reason, some characteristic parameters of the distance protection function differ from terminal to terminal. For detailed information, please refer to ordering particulars for each line protection terminal REx 5xx separately.

Distance protection zone five differs from other zones with respect to its speed of operation. It starts faster than other distance protection zones and might have for this reason higher overreaching for different system transients. It is for this reason suggested to use it only for the applications, which permit higher overreaching, (i.e. switch-onto-fault function) or as a time delayed distance protection zone with time delay longer than 100 ms.

Complement to the line differential protection

The distance protection function can become optional protection in some line differential protection terminals (REL 561, for example). At the same time it represents the primary protection for faults beyond the current transformers at the opposite terminal. This functionality is achieved by the time delayed overreaching zone (generally zone 2), which covers at least the adjacent busbar and thus forms a primary or back-up protection for the busbar. So the overreaching zone should be continuously in operation.

An underreaching zone (generally zone 1) can form a back-up to the line differential protection. There is no need for this function as long as the differential protection is in operation. To minimize the risk of unwanted operation from zone 1, this function can be activated only when the differential function is out of operation. The most likely cause to lose the differential protection is a failure within the communication system.

The communication scheme used with the distance protection should for this reason use another communication channel than the one used by the line differential protection.

Set of simplified setting parameters

Each distance protection zone comprises basically completely independent setting parameters for phase-to-earth, and for phase-to-phase measurement. This is an application advantage in complex network configurations and in networks, where it is required to adjust the newly applied distance protection functions to the existing other types of relays (overcurrent earth fault, for example).

A set of simplified optional parameters is available optionally for applications, where equal zone reaches for all kinds of faults are a standard practice. See the table of setting parameters and the setting instructions.

Basic characteristics

The distance protection function, as built into the REx 5xx line protection terminals, is a full-scheme distance protection. This means that it has individual measuring elements for different types of faults within different zones.

Depending on the type of terminal, it consists of up to five (for details see the corresponding ordering details) independent, impedance-measuring zones, each has a quadrilateral characteristic, as symbolically illustrated in figure 27. R_L and X_L represent line resistance and reactance and R_F represents the resistive reach of a protective zone.

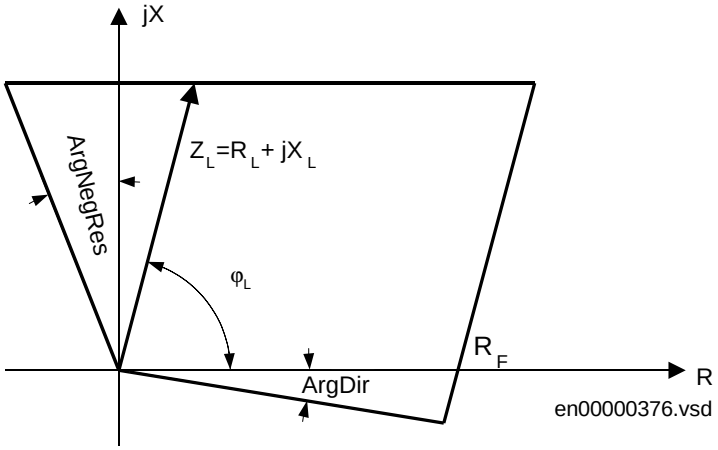

Figure 27: Typical characteristic of a distance protection zone.

The static characteristic in reactive direction is a straight line, parallel with the R-axis. The measuring algorithm used for the reactance part of the characteristic for phase-to-earth faults compensates for the influence of the load current on the impedance measurement for distance zone 1. So the static characteristic has no declination against the R-axis. Setting of the reach in a reactive direction is independent for each separate zone. It can also differ for ph-ph and for ph-E measuring elements.

A straight line limits the reach of the distance protection zone in resistive direction. It is generally parallel with Z_L, the line-impedance characteristic. This means that it forms, with the R-axis, a φ_L line-characteristic angle. Setting of the reach in resistive direction is independent for each separate zone. Different setting values are also possible for phase-to-earth faults (RFPE) and for phase-to-phase faults (RFPP).

With the X-axis, the directional characteristic in the second quadrant forms an ArgNegRes settable angle (default value 25°). With the R-axis, the corresponding part forms a settable ArgDir angle in the fourth quadrant (default value -15°), as in figure 27 and figure 28. All distance protection zones have the same directional characteristics.

The characteristics of the distance zones are independent of one another as far as their directionality and reach in different directions are concerned. One can program the directionality of each distance zone. Figure 28 shows a typical example of the characteristics of an impedance-measuring zone when directed into forward or reverse directions. A polygon, completed with dashed lines, represents the characteristic of a non-directional zone.

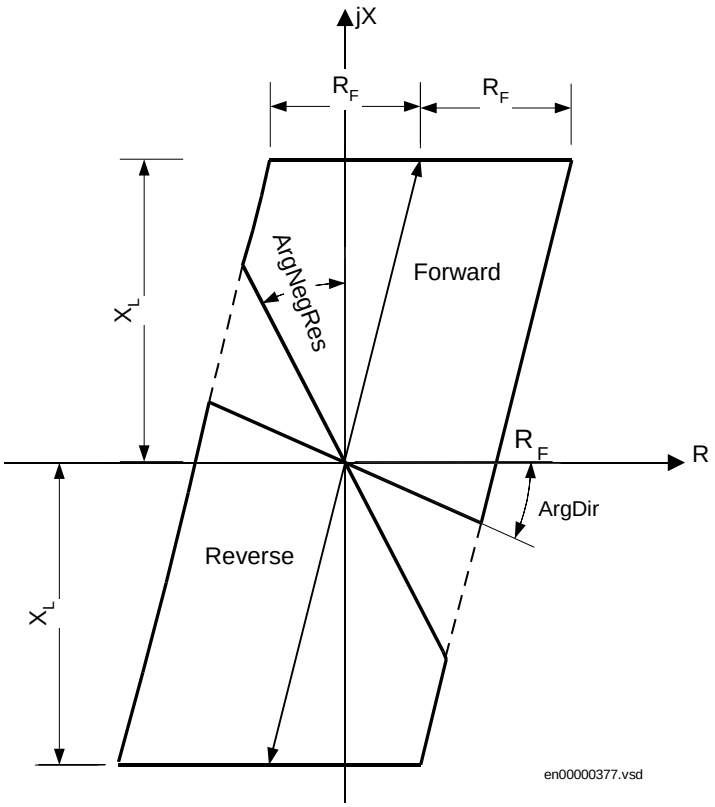

Figure 28: Nondirectional and directional (forward and reverse) operating characteristic

The set value of a reach in resistive direction determines whether the directional line in the second quadrant meets, as first, the reactive or the resistive characteristic. Compare the characteristics in figure 27 and 28.

The values of the reaches in reactive and resistive direction for a particular zone are the same for forward and reverse impedance-measuring elements and for the non-directional mode of operation.

The terminal automatically adapts the line characteristic angle according to the line parameters. Thus, the measurement of different faults follows the real conditions in a power system. Figure 29 shows an example of an operating characteristic for the ph-E fault, which faces the forward direction. Here, a Z_{loop}, phase-to-earth loop measuring impedance, consists of a Z_1 line operational impedance, Z_N earth return impedance, and the RFPE fault resistance. The characteristic angle of the complete measuring loop automatically follows the real system conditions and the complete line characteristic.

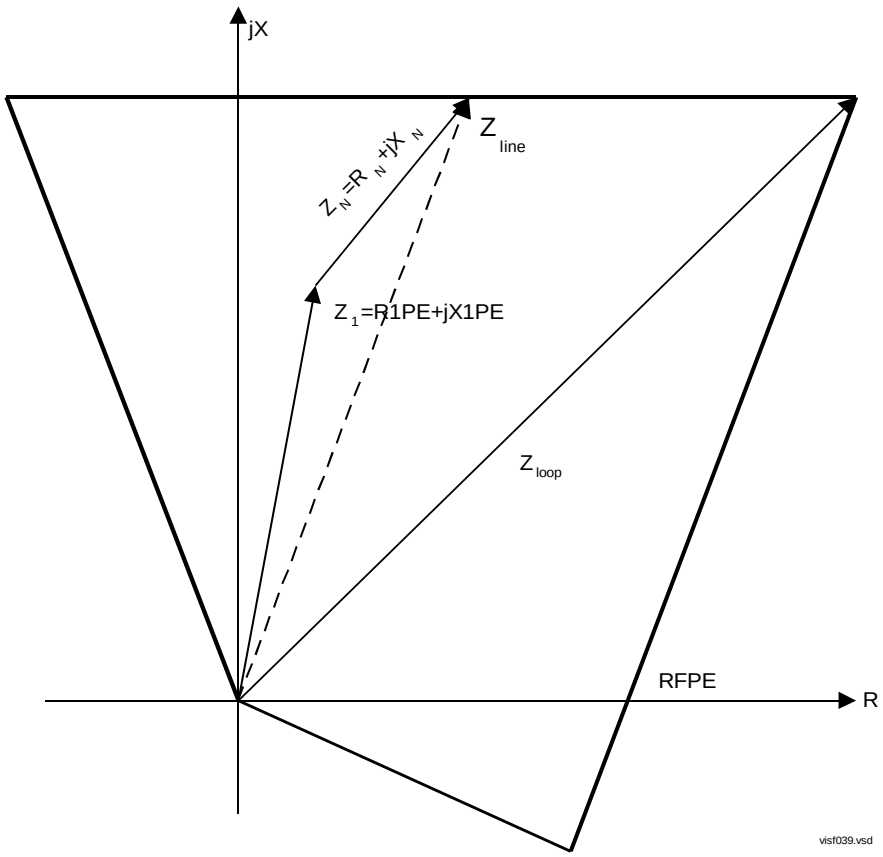

Figure 29: Characteristic of the phase-to-earth measuring loop.

The earth return impedance follows for each particular zone the expression:

$$\overline{Z_N} = \frac{1}{3} \cdot (\overline{Z_0} - \overline{Z_1})$$

(Equation 13)

with:

$$\overline{Z_1} = R1PE + j \cdot X1PE$$

(Equation 14)

and

$$\overline{Z_0} = R0PE + j \cdot X0PE$$

(Equation 15)

Where *R1PE*, *X1PE*, *R0PE* and *X0PE* are the reach setting parameters.

It is possible to make the characteristic independent of line angle by setting the corresponding line resistances R1PE and R0PE to their minimum possible values. For more details see setting instructions.

The possibility to cover a sufficient fault resistance is a major consideration in short-line applications. Load encroachment problems are not so common. The independent setting option of the reach in reactive and resistive direction is a function that greatly improves the flexibility of distance protection. For these short line applications, an optional overreaching scheme communication logic, also improves, the resistive coverage. The optimum solution in some applications is to add the optional, directional-comparison, earth-fault, overcurrent protection to the distance protection scheme.

In long line applications, the margin to the load impedance (to avoid load encroachment) is usually a major consideration. Quadrilateral characteristics with independent settings of the reach in reactive (to cover sufficient length of a line) and resistive (to avoid load encroachment) direction greatly diminish the conflict that is very characteristic for circular characteristics.

A wide setting range of the reach in a reactive direction, which one set independently for each zone with good current sensitivity — down to 10% of the rated current — is an important factor that improves the performances of the distance protection when used on long transmission lines.

High-voltage power cables have two main characteristics that make them, from the distance protection perspective, different from overhead lines:

- They are relatively short, compared to overhead lines.
- The value of their zero-sequence reactance is very low, in many cases even lower than the positive-sequence reactance. This results in a negative value of the characteristic angle for the earth-return impedance.

Without approximation, the value of the earth-return compensation automatically follows the parameters of a power cable for positive and zero sequence reactance and resistance. This makes the impedance measuring function, as built into the REx 5xx line-protection terminals, suitable for the protection of short, EHV power cables. The independent setting of the reach (in reactive and resistive direction, separately and independently for each distance zone) improves these basic performances.

Zero-sequence, mutual impedance between different circuits of the multicircuit parallel operating lines is a factor that particularly influences the performance of distance protection during single-phase-to-earth fault conditions. Distance protection must also operate selectively for intersystem faults and simultaneous faults to the greatest possible extent.

The separate and independent setting of the parameters that determine the value of earth-return compensation for different distance-protection zones, enables the compensation of the influence of the zero-sequence, mutual impedance on the measurement of the impedance-measuring elements for single-phase-to-earth faults.

Separate, optional, phase selectors usage, with their reach setting independent of the reach of the zone measuring elements, greatly improves the performance of distance protection on the multicircuit parallel operating lines. At the same time and to the lowest possible level, these selectors reduce the influence of the heavy load current, that is present during a fault, on the phase selection function within the terminals.

Additional phase-segregated, scheme communication logic (refer to the ordering information for its availability within the different types of terminals) enables absolute phase selectivity of the distance protection of multi-circuit, parallel operating lines.

For the selective operation of distance protection on tied and multiterminal lines, flexibility in scheme communication logic associated with the distance protection function is a great advantage. Scheme communication logic built into the REx 5xx line protection terminals enables the adaptation of any communication scheme to the existing system conditions. The free selection of overreaching and underreaching zones, with the free selection of a conditional zone, and independent settings of the reach for different zones, makes the REx 5xx line protection terminals extremely flexible for such applications.

1.2 Functionality

1.2.1 Measuring principle

Fault loop equations use the complex values of voltage, current, and changes in the current. Apparent impedances are calculated and compared with the set limits. The calculation of the apparent impedances at ph-ph faults follows the equation (example for a phase L1 to phase L2 fault):

$$\overline{Z_{ap}} = \frac{\overline{U_{L1}} - \overline{U_{L2}}}{\overline{I_{L1}} - \overline{I_{L2}}}$$

(Equation 16)

Here represent U and I the corresponding voltage and current phasors in the respective phase Ln (n = 1, 2, 3)

The earth return compensation applies in a conventional manner for ph-E faults (example for a phase L1 to earth fault):

$$\overline{Z_{ap}} = \frac{\overline{U_{L1}}}{\overline{I_{L1}} + \overline{K_N} \cdot \overline{I_N}}$$

(Equation 17)

Here IN is a phasor of the residual current in relay point. This results in the same reach along the line for all types of faults.

The apparent impedance is considered as an impedance loop with resistance *R* and reactance *X*, as presented in figure 30.

The measuring elements receive information about currents and voltages from the A/D converter. The check sums are calculated and compared, and the information is distributed into memory locations. For each of the six supervised fault loops, sampled values of voltage (*U*), current (*I*), and changes in current between samples (ΔI) are brought from the input memory and fed to a recursive Fourier filter.

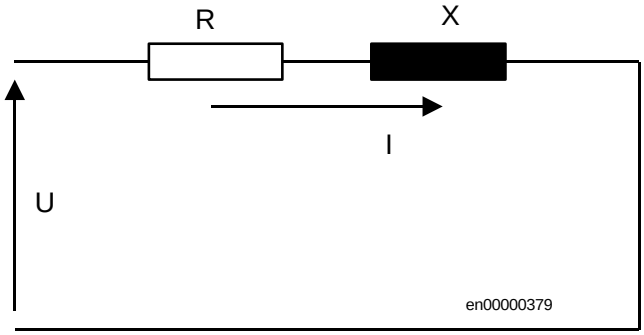

Figure 30: Apparent impedance with resistance and reactance connected in series

The filter provides two orthogonal values for each input. These values are related to the loop impedance according to the formula:

$$\bar{U} = R \cdot \bar{I} + \frac{X}{\omega_0} \cdot \frac{\Delta \bar{I}}{\Delta t}$$

(Equation 18)

in complex notation, or:

$$Re(\bar{U}) = R \cdot Re(\bar{I}) + \frac{X}{\omega_0} \cdot \frac{\Delta Re(\bar{I})}{\Delta t}$$

(Equation 19)

$$Im(\bar{U}) = R \cdot Im(\bar{I}) + \frac{X}{\omega_0} \cdot \frac{\Delta Im(\bar{I})}{\Delta t}$$

(Equation 20)

with

$$\omega_0 = 2 \cdot \pi \cdot f_0$$

(Equation 21)

Where:

Re	designates the real component,
Im	designates the imaginary component of current and voltage and
f_0	designates the rated system frequency

The algorithm calculates *Rm* measured resistance from the equation for the real value of the voltage and substitute it in the equation for the imaginary part. The equation for the Xm measured reactance can then be solved. The final result is equal to:

$$R_m = \frac{Im(\overline{U}) \cdot \Delta Re(\overline{I}) - Re(\overline{U}) \cdot \Delta Im(\overline{I})}{\Delta Re(\overline{I}) \cdot Im(\overline{I}) - \Delta Im(\overline{I}) \cdot Re(\overline{I})}$$

(Equation 22)

$$X_m = \omega_0 \cdot \Delta t \cdot \frac{Re(\overline{U}) \cdot Im(\overline{I}) - Im(\overline{U}) \cdot Re(\overline{I})}{\Delta Re(\overline{I}) \cdot Im(\overline{I}) - \Delta Im(\overline{I}) \cdot Re(\overline{I})}$$

(Equation 23)

The calculated R_m and X_m values are updated each millisecond and compared with the set zone reach. The adaptive tripping counter counts the number of permissive tripping results. This effectively removes any influence of errors introduced by the capacitive voltage transformers or by other causes. The algorithm is insensitive to changes in frequency, transient dc components, and harmonics because a true replica of the protected line is implemented in the algorithm.

The directional evaluations are simultaneously performed in forward and reverse directions, and in all six fault loops. Positive sequence voltage and a phase locked positive sequence memory voltage are used as a reference. This ensures unlimited directional sensitivity for faults close to the relay point.

Measured impedance

Phase-to-earth measurement

The impedance measurement for the phase-to-earth faults is performed on the loop basis by comparing the calculated R_m resistance and X_m reactance with the set values of the reach in the resistive and reactive direction:

$$R_m \geq \left[R1PE + \frac{1}{3} \cdot (R0PE - R1PE) \right] \cdot p - RFPE$$

(Equation 24)

$$R_m \leq \left[R1PE + \frac{1}{3} \cdot (R0PE - R1PE) \right] \cdot p + RFPE$$

(Equation 25)

$$X_m \geq - X1PE - \frac{1}{3} \cdot (X0PE - X1PE)$$

(Equation 26)

$$X_m \leq X1PE + \frac{1}{3} \cdot (X0PE - X1PE)$$

(Equation 27)

The *p* factor represents the relative fault position (-1≤p≤1) within the reactive operating limits in forward and reverse direction.

Equations for resistive measurement represent in the impedance plane non-directional operating limits in resistive direction (see figure 31). For the faults on radial lines equation 24 represents a straight line (left side operating characteristic in loop domain), which passes the *R* axis at point *D = - RFPE + j0* and forms with it an angle of:

$$\alpha = \operatorname{atan} \left[\frac{X1PE + \frac{1}{3} \cdot (X0PE - X1PE)}{R1PE + \frac{1}{3} \cdot (R0PE - R1PE)} \right]$$

(Equation 28)

Equation 25 represents for the same conditions a straight line (right side operating limit) passing the R axis in set point *B = RFPE + j0* and is parallel to the left side operating characteristic. Equations 26 and 27 represent in the impedance plane the operating limits in reactive direction (see figure 31). For faults on radial lines equation 26 represents in impedance plane (loop domain) a straight line, which is parallel with the R axis and passes the point

$$C = 0 - j\left[X1PE + \frac{1}{3} \cdot (X0PE - X1PE)\right]$$

(Equation 29)

Similarly represents equation 27 a straight line, which is also parallel with the R axis and passes the point

$$A = 0 + j\left[X1PE + \frac{1}{3} \cdot (X0PE - X1PE)\right]$$

(Equation 30)

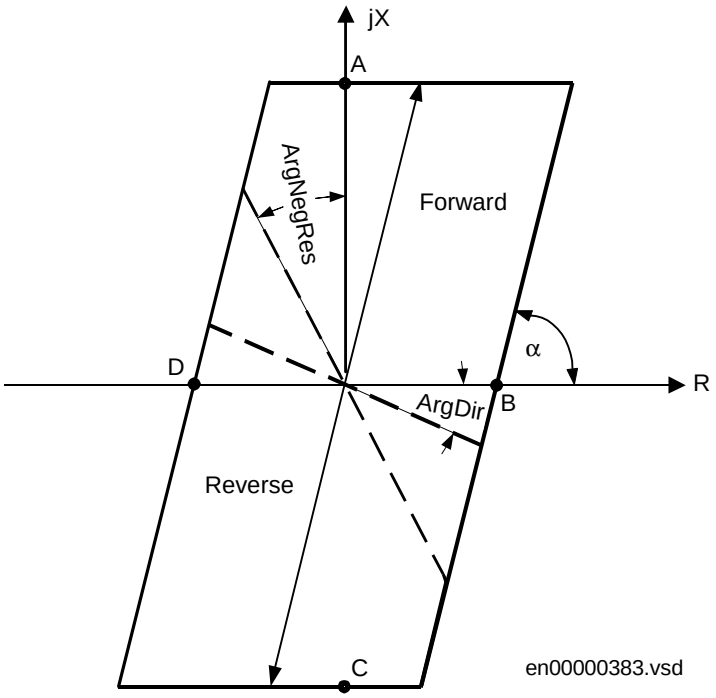

Figure 31: General operating characteristic of impedance measuring elements

Phase-to-phase measurement

The impedance measurement for the phase-to-phase faults is performed on a phase basis by comparing the calculated R_m resistance and X_m reactance with the set values of the reach in the resistive and reactive direction:

$$R_m \geq R1PP \cdot p - \frac{1}{2} \cdot RFPP$$

(Equation 31)

$$R_m \leq R1PP \cdot p + \frac{1}{2} \cdot RFPP$$

(Equation 32)

$$X_m \geq -X1PP$$

(Equation 33)

$$X_m \leq X1PP$$

(Equation 34)

Here represents *p* factor the relative fault position (- 1 < p < 1) within the reactive zone reach. Parameters *R1PP*, *X1PP* and *RFPP* are the reach setting parameters for the ph-ph and three-phase faults. The first two equations represent the left and right side operating boundaries, see figure 31. For the faults on radial feeders represent these two equations straight lines in impedance plain, which cross the R axis in points:

$$D = -\frac{1}{2} \cdot RFPP + j0$$

(Equation 35)

and

$$B = \frac{1}{2} \cdot RFPP + j0$$

(Equation 36)

respectively.

Both operating limits are parallel and form with the R axis an angle of:

$$\alpha = \operatorname{atan}\left(\frac{X1PP}{R1PP}\right)$$

(Equation 37)

The third and the fourth equations represent the reactive operating boundaries in forward and reverse direction, see figure 31. They cross in impedance plain the X axis in operating points: *A = X1PP* and *C = -X1PP* respectively. For the faults on radial feeders this two boundaries are straight lines, parallel with the R axis.

Directional lines

The results of impedance measurement are combined in “and” combination with the directional measurement, to obtain the desired directionality for each distance protection zone separately, see figure in “Phase-to-earth measurement”.

The directional measurement is based on the use of a positive-sequence voltage for the respective fault loop. For the L1-N element, the equation for forward direction is:

$$-\text{ArgDir} < \arg\frac{0.8 \cdot U_{1L1} + 0.2 \cdot U_{1L1M}}{I_{L1}} < \text{ArgNegRes}$$

(Equation 38)

For the L1-L2 element, the equation in forward direction is:

$$-\text{ArgDir} < \arg\frac{0.8 \cdot U_{1L1L2} + 0.2 \cdot U_{1L1L2M}}{I_{L1L2}} < \text{ArgNegRes}$$

Where:

ArgDir	is the setting for the lower boundary of the forward directional characteristic, by default set to 15 (= -15 degrees) and
ArgNegRes	is the setting for the upper boundary of the forward directional characteristic, by default set to 115 (degrees)

The reverse directional characteristic is equal to the forward characteristic rotated by 180 degrees.

The polarizing voltage is available as long as the positive-sequence voltage exceeds 4% of the rated voltage Ur. So the directional element can use it for all unsymmetrical faults including close-in faults.

For close-in three-phase faults, the U_{1L1M} memory voltage, based on the same positive sequence voltage, ensures correct directional discrimination.

The memory voltage is used for 100 ms or until the positive sequence voltage is restored. After 100 ms, the following occurs:

- If the current is still above the set value of the minimum operating current (between 10 and 30% of the terminal rated current Ir), the condition seals in.
- If the fault has caused tripping, the trip endures.
- If the fault was detected in the reverse direction, the measuring element in the reverse direction remains in operation.
- If the current decreases below the minimum operating value, the memory resets until the positive sequence voltage exceeds 10% of its rated value.

1.3 Design

Full-scheme measurement

Up to three digital signal processors execute algorithms for up to five, full-scheme distance protection zones, depending on the type of the REx 5xx line protection terminal. Figure 32 presents an outline of the different measuring loops for the basic five, impedance-measuring zones when both, ph-E and ph-ph fault measuring loops are included into the terminal.

The first digital-signal processor (DSP) measures different fault loops for different single-phase-to-earth faults and for different zones. This way, it forms the resistive and reactive part of a characteristic for single-phase-to-earth faults. The second DSP performs the same task for the phase-to-phase fault loops. The third DSP separately performs the directional measurement for all types of faults in forward and reverse directions. The presence of the first or the second DSP within the terminal depends on its type and the fault type, for which the distance protection is ordered (see ordering particulars for each REx 5xx terminal separately).

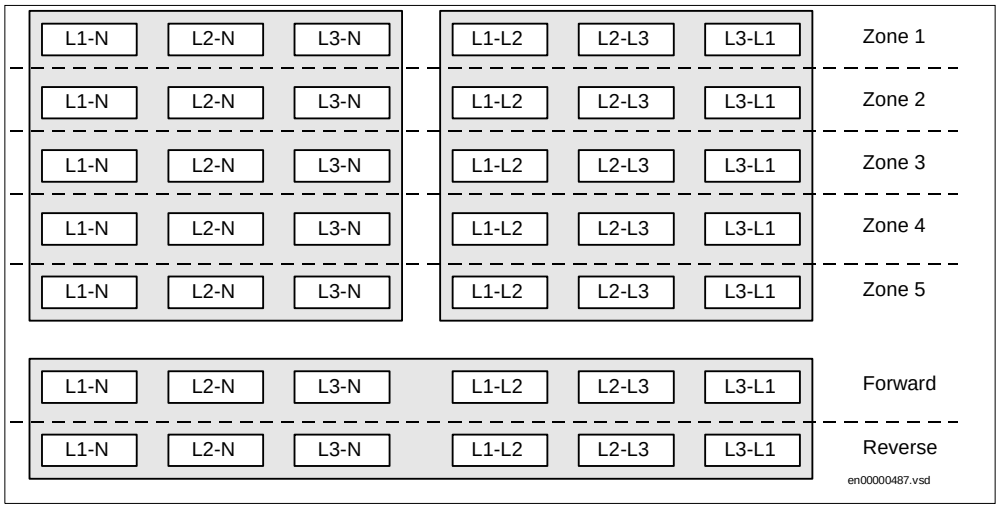

Figure 32: Location of different measuring loops within the three digital signal processors

The parallel execution of measurements in up to three different DSPs permits the separate evaluation of each impedance measuring loop for each zone every millisecond. This gives the distance protection function the same features as those known for the full-scheme design of conventional distance relays (REZ 1, RAZFE). So each distance protection zone performs like one independent distance protection relay with six measuring elements.

Distance protection zone one

The design of distance protection zone 1 is presented for all measuring loops: phase-to-earth as well as phase-to-phase. Different terminals REx 5xx have built-in different measuring circuits, dependent on ordering details. In the following description consider only the phase-to-earth related signals, if only phase-to-earth measurement is included in terminal. Similarly consider only the phase-to-phase related signals, if only phase-to-phase measurement is included in terminal.

The phase-to-earth related signals are designated by LnE, where represents n the corresponding phase number (L1E, L2E, and L3E). The phase-to-phase signals are designated by LnLm, where n and m represent the corresponding phase numbers (L1L2, L2L3, and L3L1).

Fulfillment of two different measuring conditions is necessary to obtain the logical one signal for each separate measuring loop:

- Zone measuring condition, which follows the operating equations described above.
- Group functional input signal (ZM1--STCND), as presented in figure 33.

The ZM1--STCND input signal represents a connection of six different integer values from other measuring functions within the terminal, which are converted within the zone measuring function into corresponding boolean expressions for each condition separately (see “ZMn--STCND functional input” in “Basic configuration”).

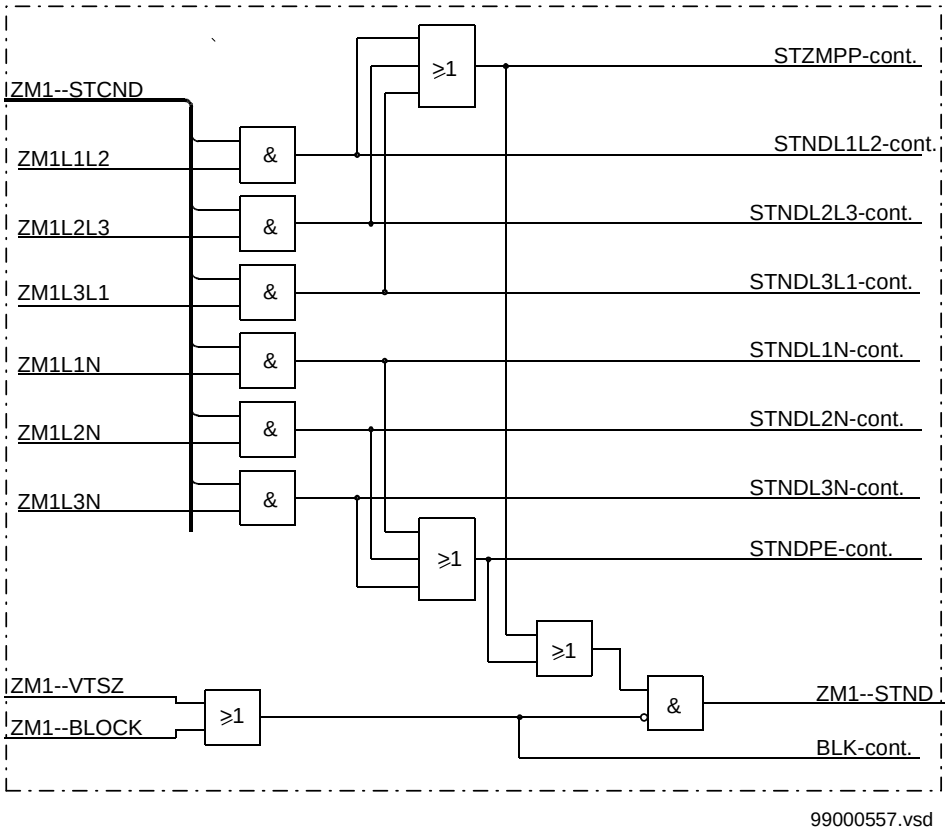

Figure 33: Conditioning by a group functional input signal ZM1--STCND

Composition of the phase starting signals for a case, when the zone operates in a non-directional mode, is presented in figure 34.

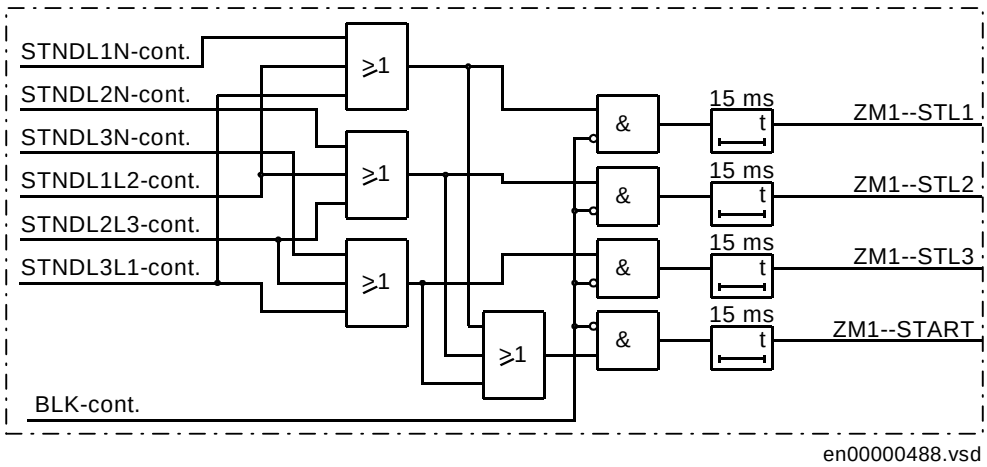

Figure 34: Composition of starting signals in non-directional operating mode

Results of the directional measurement enter the logic circuits, when the zone operates in directional (forward or reverse) mode, see figure 35.

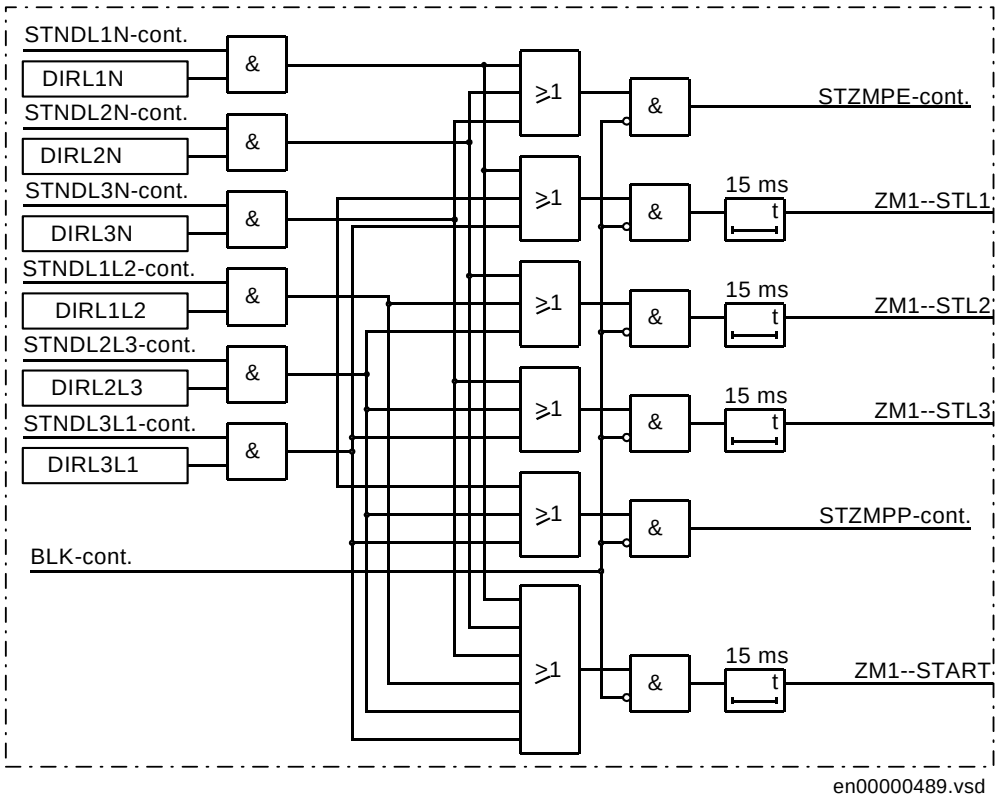

Figure 35: Composition of starting signals in directional operating mode

Tripping conditions for the distance protection zone one are symbolically presented on figure 36.

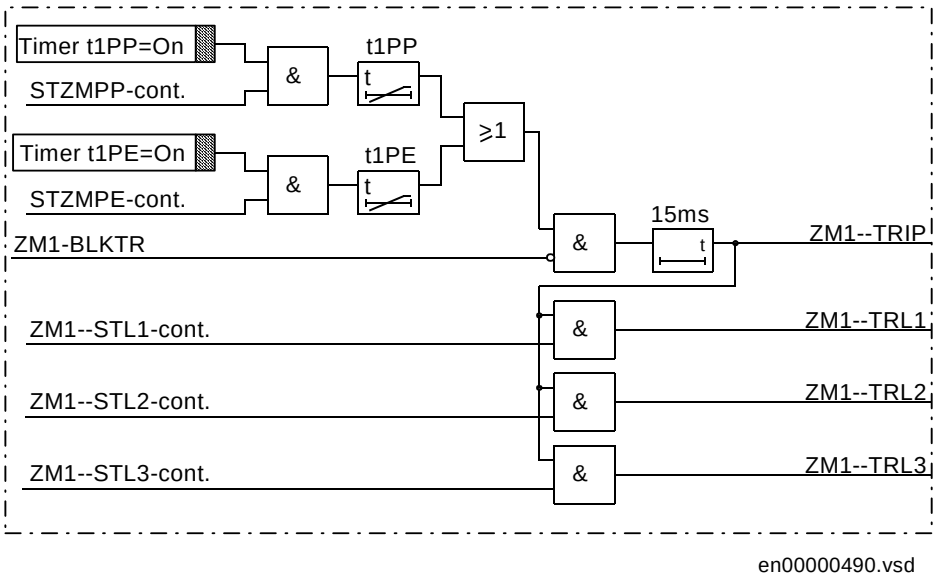

Figure 36: Tripping logic for the distance protection zone one

Phase related starting and tripping signals are available only in case, when the 1/2/3 phase tripping unit is ordered within the terminal. Please, refer to ordering particulars for each REx 5xx terminal separately.

Remaining distance protection zones

Distance protection zones two and three have the same composition as distance protection zone 1. All descriptions for the distance protection zone 1 are for this reason valid also for the distance protection zones two and three. It is only necessary to replace the ZM1- designation with corresponding designations ZM2- for zone two and ZM3- for zone three respectively.

Distance protection zones four (ZM4-) and five (ZM5-) are based on the same principles as the other distance protection zones. The only difference is in the presentation of phase selective signals, belonging to these two zones. The phase selective signals are not available with distance protection zones four and five.

1.4 Calculations

1.4.1 Setting instructions

The setting values of all parameters that belong to distance protection within the REx 5xx line-protection terminals, must correspond to the parameters of the protected line and to the selectivity plan for the network.

Reach setting recommendations

Before starting the setting activities for the distance protection function, check that the setting values of the secondary rated current within the terminal correspond to the current transformers used for the same purposes for a specific REx 5xx terminal.

Conversion to secondary impedances

Convert the primary line impedances to the secondary sides of the current and voltage instrument transformers. The following relation applies to these purposes:

$$Z_{sec} = \frac{U_{sec}}{U_{prim}} \cdot \frac{I_{prim}}{I_{sec}} \cdot Z_{prim}$$

(Equation 39)

Where:	
Abbreviation:	**Is a set value of:**
I_{prim}	Rated primary current of the used current instrument transformers
I_{sec}	Rated secondary current of the used current instrument transformers
U_{prim}	Rated primary voltage of the used voltage instrument transformers
U_{sec}	Rated secondary voltage of the used voltage instrument transformers
Z_{prim}	Primary impedance
Z_{sec}	Calculated secondary impedance

Basic zone setting recommendations

An impedance seen by the distance protection might differ from the calculated values due to:

- Errors introduced by current and voltage instrument transformers, particularly under transient conditions.
- Inaccuracies in the line zero-sequence impedance data, and their effect on the calculated value of the earth-return compensation factor.
- The effect of infeed between the relay and the fault location, including the influence of different Z_0/Z_1 ratios of the various sources.
- The phase impedance of untransposed lines is not identical for all fault loops. The difference between the impedances for different phase-to-earth loops can be as large as 5-10% of the total line impedance.
- The effect of a load transfer between the terminals of the protected line. When the fault resistance is considerable, the effect must be recognized.
- Zero-sequence mutual coupling from parallel lines.

Usually, these errors require a limitation of the underreaching zone (normally zone 1) to 85-90% of the protected line. For the same reason, it is necessary to increase the reach of the overreaching zone (normally zone 2) to at least 120% of the protected line — to ensure that the overreaching zone always covers a complete line. The zone 2 reach can be even higher, but in general it should never exceed 80% of the following impedances:

- The impedance corresponding to the protected line, plus the first zone reach of the shortest adjacent line.
- The impedance corresponding to the protected line, plus the impedance of the maximum number of transformers operating in parallel on the bus at the remote end of the protected line.

The back-up overreaching zone (normally zone 3) must never exceed 90% of the shortest zone 2 reach of any of the lines connected to the remote end bus. It must be at least 2 times the zone 1 reach.

The reverse zone is applicable for purposes of scheme communication logic, current reversal logic, weak-end-infeed logic, and so on. The same applies to the back-up protection of the busbar or power transformers. It is necessary to secure, that it always covers the overreaching zone, used at the remote line terminal for the telecommunication purposes.

In the case of a long line followed by a short line, or by a large bank of low impedance transformers, the mandatory 120% setting might overreach zone 1 of the adjacent line, or reach through the transformer bank at the other line end. In such cases, one must increase the zone 2 time delay and thus secure the selectivity. The zone 2 reach must not be reduced below 120% of the protected line section. It must be covered under all conditions.

In networks with lines tied at an intermediate location, consider an increase in the measured impedance due to the fault current fed into the system at the teed point.

If a fault occurs at point F (see figure 37 also for the explanation of all abbreviations used), the relay at point A senses the impedance:

$$\overline{Z_m} = \overline{Z_{AC}} + \frac{\overline{I_A} + \overline{I_B}}{\overline{I_A}} \cdot \overline{Z_{CF}} = \overline{Z_{AC}} + \left(1 + \frac{\overline{I_B}}{\overline{I_A}}\right) \cdot \overline{Z_{CF}}$$

(Equation 40)

I_A and I_B are fault currents from sources A and B respectively.

Assume that the reach of zone 1 of the relay in C covers 85% of ZCD, and the reach of zone 2 of the relay in A covers 80% of (Z_{AC} + 85% of Z_{CD}).

The impedance from station A up to the reach limit of the first zone at C corresponds to:

$$\overline{Z_{AC}} + 0.85 \cdot \left(1 + \frac{\overline{I_B}}{\overline{I_A}}\right) \cdot \overline{Z_{CD}}$$

(Equation 41)

The reach of zone 2 can not be longer than 80% of the apparent impedance at the limit of the first zone at C, which means that:

$$\overline{Z2} = 0.8 \cdot \left[\overline{Z_{AC}} + 0.85 \cdot \left(1 + \frac{\overline{I_B}}{\overline{I_A}}\right) \cdot \overline{Z_{CD}}\right]$$

(Equation 42)

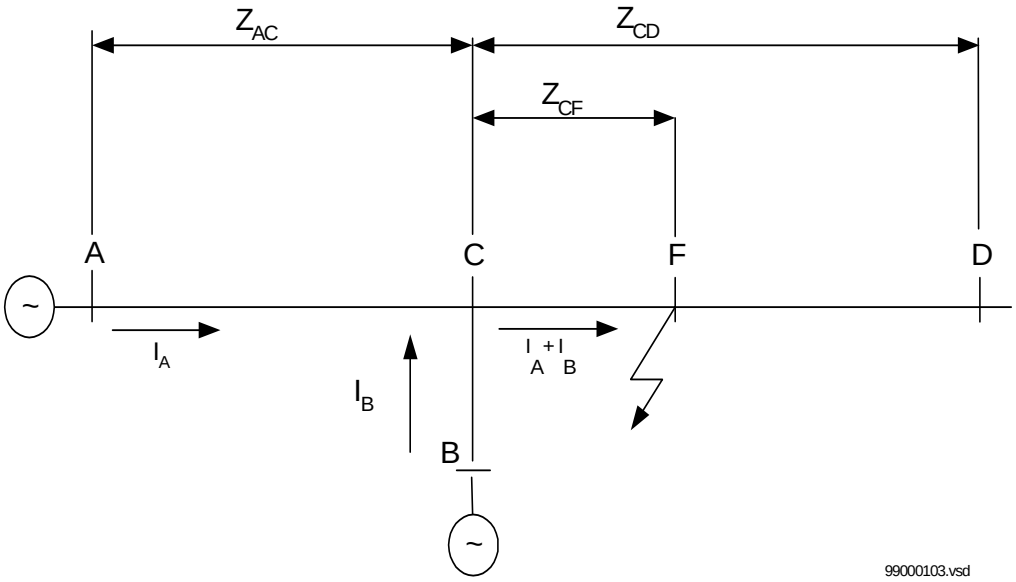

Figure 37: Network with line tied at an intermediate location

Also consider the apparent increase of measured impedance due to the power fed into the system for the zone 3 setting.

When calculating the setting, consider the lowest value of the current ratio from two sources that can occur when only one group of setting parameters is used for all operating conditions.

The distance protection function performs best in the power system with its setting values optimized to specific system conditions. So use different pre-set and pre-test groups of setting parameters for different expected system operating conditions.

REx 5xx terminals have a built-in memory capacity for four groups of setting parameters, all completely independent of one another. It is possible to set and pre-test all of them during the commissioning. Their activation is possible:

- Locally — with the local HMI or a PC
- Remotely — with the SMS or/and SCS (depending on whether the optional remote communication is built into the terminal or not).

Earth return compensation

A simplified measuring loop at the single-phase-to-earth faults consists of three impedances, as shown in figure 38:.

Where:	
Abbreviation:	**Is a set value of:**
Z1	Positive sequence impedance of the line
Rf	Fault resistance
ZN	Earth-return impedance
Z0	Zero sequence impedance of the line

The earth return impedance is equal to:

$$\overline{Z_N} = \frac{1}{3} \cdot (\overline{Z_0} - \overline{Z_1})$$

(Equation 43)

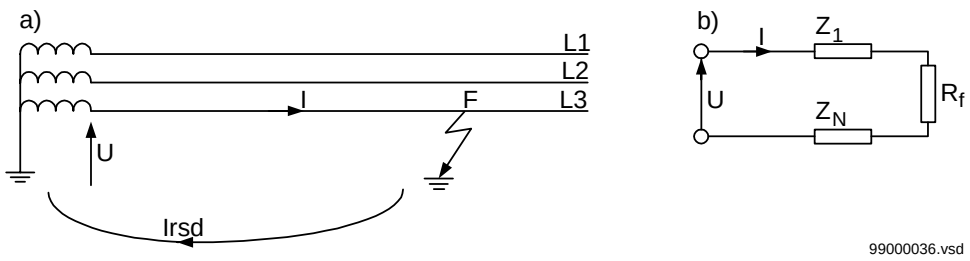

Figure 38: Equivalent circuits for measurement at single-phase-to-earth faults.

The complete measuring impedance, according to Figure 38 is equal to:

$$\overline{Z_{loop}} = \overline{Z_1} + \overline{Z_N} + R_f = \frac{1}{3} \cdot (2 \cdot \overline{Z_1} + \overline{Z_0}) + R_f$$

(Equation 44)

The reach of distance protection zone is related to the positive sequence line impedance. So an earth-return compensation factor has been introduced into the measuring algorithm. Its value is equal to:

$$\overline{Z_{loop}} = \overline{Z_1} \cdot (1 + \overline{K_N}) + R_F = \frac{1}{3} \cdot (2\overline{Z_1} + \overline{Z_0}) + R_f \Rightarrow$$

(Equation 45)

$$\Rightarrow \overline{K_N} = \frac{\overline{Z_N}}{\overline{Z_1}} = \frac{1}{3} \cdot \frac{\overline{Z_0} - \overline{Z_1}}{\overline{Z_1}}$$

(Equation 46)

The impedance measuring algorithm within the REL 5xx terminals calculates automatically the complex value of the earth-return compensation factor KN on the basis of the set values for the

- Positive sequence reactance of protected line section *X1PE*
- Positive sequence resistance of protected line section *R1PE*
- Zero-sequence reactance of protected line section *X0PE*
- Zero-sequence resistance of protected line section *R0PE*

Fault resistance

The performance of distance protection for single-phase-to-earth faults is very important, because normally more than 70% of the faults on transmission lines are single-phase-to-earth faults.

At these faults, the fault resistance is composed of three parts: arc resistance, resistance of a tower construction, and tower-footing resistance.

The arc resistance can be calculated according to Warrington’s formula:

$$R_{arc} = \frac{28707 \cdot L}{I^{1.4}}$$

(Equation 47)

Where:

L represents the length of the arc (in meters). This equation applies for the distance protection zone 1. Consider approximately three-times arc foot spacing for the zone 2 with time delay of 0.7 seconds and wind speed of approximately 50 km/h.

I is the actual fault current in A.

Calculate or measure the tower-footing resistance for the specific case, because the variation of this parameter is very large.

The distance protection cannot detect very high-resistive earth faults, because the load impedance and load transfer limit its reach. For faults with resistance higher than those that can be detected by the impedance measurement, an optional earth-fault overcurrent protection can be included in the REx 5xx terminals.

Zero-sequence mutual coupling on multicircuit lines

When calculating the settings for distance-protection ph-E fault measuring elements, one must consider zero-sequence mutual coupling between the circuits of the multicircuit lines. The positive and the negative-sequence mutual coupling generally have no significant influence on the operation of the impedance-measuring protection schemes.

The distance protection within the REx 5xx terminals can compensate for the influence of a zero-sequence mutual coupling on the measurement at single-phase-to-earth faults in the following ways, by using:

- The possibility of different values that influence the earth-return compensation for different distance zones within the same group of setting parameters.
- Different groups of setting parameters for different operating conditions of a protected multicircuit line.

Most multicircuit lines have two parallel operating circuits, as shown in figure 39. The application guide mentioned below recommends in more detail the setting practice for this particular type of line. The basic principles also apply to other multicircuit lines. The Application Guide on Protection of Complex Transmission Network Configurations describes the problems in more detail. The CIGRE Working Group 04 of Study Committee 34 (Protection), published the guide in November 1991.

Zm0 in figure 39 represents the zero-sequence mutual-coupling impedance between circuits of a double-circuit, parallel operating line.

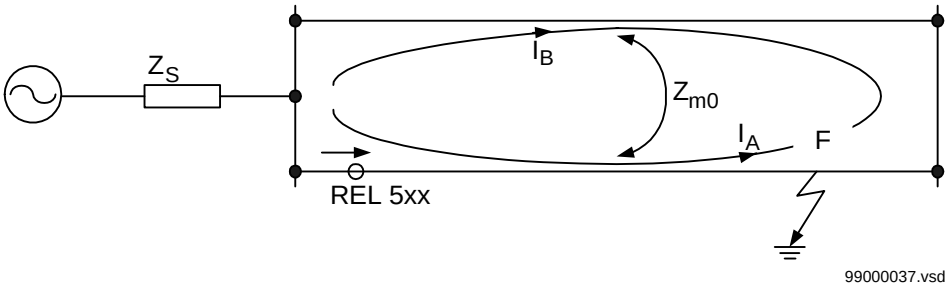

Figure 39: Double-circuit parallel operating line

The parallel circuit disconnected and earthed at both ends

Figure 40 represents an equivalent zero-sequence impedance circuit for the double-circuit parallel operating line. Input terminals A and B are related to the input terminals of each circuit close to the busbar A in figure 39. Terminal C is related to the F fault point, moved towards the B busbar.

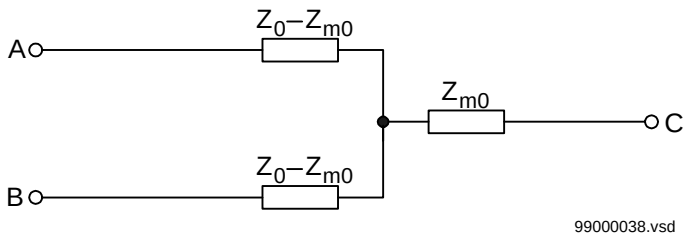

Figure 40: Equivalent zero sequence impedance circuit of the double-circuit, parallel, operating line with a single phase-to-earth fault at the remote busbar

The distance protection overreaches for single-phase-to-earth faults on the protected line when the parallel circuit is disconnected and earthed on both ends. The equivalent zero-sequence impedance circuit gets the configuration as in figure 41.

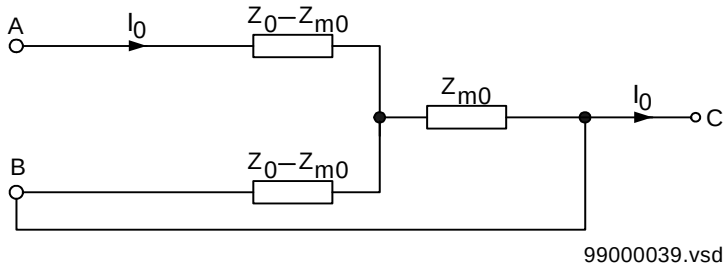

Figure 41: Equivalent zero-sequence impedance circuit for the double-circuit line that operates with one circuit disconnected and earthed at both ends

Here the equivalent zero-sequence impedance is equal to:

$$\bar{Z}_{0E} = \frac{\bar{Z}_0^2 - \bar{Z}_{m0}^2}{\bar{Z}_0}$$

(Equation 48)

This influences the value of the total loop impedance as measured by the distance-protection function, thus causing it to overreach. It is necessary to compensate for this overreaching by setting the compensated zero-sequence impedance for the particular underreaching zone.

All expressions below are proposed for practical use. They assume the value of zero-sequence, *mutual resistance* R_{m0} equals to zero. They consider only the zero-sequence, mutual reactance X_{m0}.

Calculate the equivalent X_{0E} and R_{0E} zero-sequence parameters according to the equations below for each particular line section and set them for the particular underreaching zone of distance protection function.

$$R_{0E} = R_0 \cdot \left(1 + \frac{X_{m0}^{\ 2}}{R_0^{\ 2} + X_0^{\ 2}}\right)$$

(Equation 49)

$$X_{0E} = X_0 \cdot \left(1 - \frac{X_{m0}^{\ 2}}{R_0^{\ 2} + X_0^{\ 2}}\right)$$

(Equation 50)

The parallel circuit out of service and not earthed

When the parallel circuit is out of service and not earthed, it has the equivalent zero-sequence impedance circuit for faults at the remote busbar as shown in figure 42. The line zero-sequence mutual impedance does not influence the measurement of the distance protection in a faulty circuit. This means that the reach of the underreaching distance-protection zone is reduced if, due to operating conditions, the equivalent zero-sequence impedance is set according to the conditions when the parallel system is out of operation and earthed at both ends.

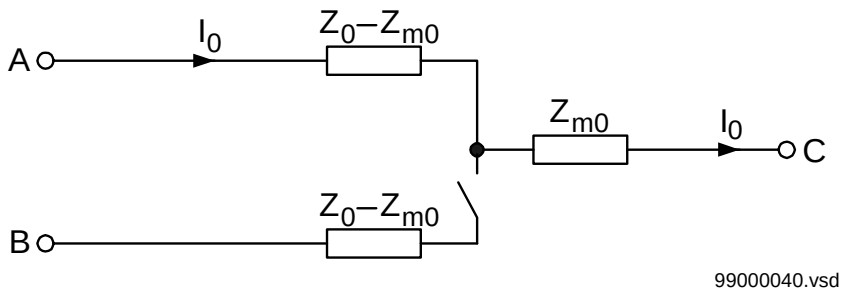

Figure 42: Equivalent zero-sequence impedance circuit for a double-circuit line with one circuit disconnected and not earthed

The reduction of the reach is equal to:

$$\overline{K_U} = \frac{\frac{1}{3} \cdot (2 \cdot \overline{Z_1} + \overline{Z_{0E}}) + R_f}{\frac{1}{3} \cdot (2 \cdot \overline{Z_1} + \overline{Z_0}) + R_f} = 1 - \frac{\overline{Z_{m0}}^{2}}{\overline{Z_0} \cdot (2 \cdot \overline{Z_1} + \overline{Z_0} + 3R_f)}$$

(Equation 51)

This means that the reach is reduced in reactive and resistive directions. If the real and imaginary components of the constant *A* are equal to:

$$Re(\overline{A}) = R_0 \cdot (2 \cdot R_1 + R_0 + 3 \cdot R_f) - X_0 \cdot (2 \cdot X_1 + X_0)$$

(Equation 52)

$$Im(\overline{A}) = X_0 \cdot (2 \cdot R_1 + R_0 + 3 \cdot R_1) + R_0 \cdot (2 \cdot X_1 + X_0)$$

(Equation 53)

The real component of the KU factor is equal to:

$$Re(\overline{K_U}) = 1 + \frac{Re(\bar{A}) \cdot X_{m0}{}^2}{[Re(\bar{A})]^2 + [Im(\bar{A})]^2}$$

(Equation 54)

The imaginary component of the same factor is equal to:

$$Im(\overline{K_U}) = \frac{Im(\bar{A}) \cdot X_{m0}{}^2}{[Re(\bar{A})]^2 + [Im(\bar{A})]^2}$$

(Equation 55)

Ensure that the underreaching zones from both line ends will overlap a sufficient amount (at least 10%) in the middle of the protected circuit.

Parallel circuit in service

The zero-sequence mutual coupling can reduce the reach of distance protection on the protected circuit when the parallel circuit is in normal operation. The reduction of the reach is most pronounced with no infeed in the line terminal closest to the fault. This reach reduction is normally less than 15%. But when the reach is reduced at one line end, it is proportionally increased at the opposite line end. So this 15% reach reduction does not significantly affect the operation of a permissive underreach scheme.

Setting of the overreaching zones

Overreaching zones (in general, zones 2 and 3) must overreach the protected circuit in all cases. The greatest reduction of a reach occurs in cases when both parallel circuits are in service with a single-phase-to-earth fault located at the end of a protected line. The equivalent zero-sequence impedance circuit for this case is equal to the one in figure 40.

The components of the zero-sequence impedance for the overreaching zones must be equal to at least:

$$R_{0E} = R_0 + R_{m0}$$

(Equation 56)

$$X_{0E} = X_0 + X_{m0}$$

(Equation 57)

Check the reduction of a reach for the overreaching zones due to the effect of the zero-sequence mutual coupling. The reach is reduced for a factor:

$$\overline{K_0} = 1 - \frac{\overline{Z_{m0}}}{2 \cdot \overline{Z_1} + \overline{Z_0} + \overline{Z_{m0}} + 3R_f}$$

(Equation 58)

If the real and imaginary components of the B constant are equal to:

$$Re(\bar{B}) = 2 \cdot R_1 + R_0 + R_{m0} + 3 \cdot R_f$$

(Equation 59)

$$Im(\bar{B}) = 2 \cdot X_1 + X_0 + X_{m0}$$

(Equation 60)

The real and the imaginary value of the reach reduction factor for the overreaching zones are equal to:

$$Re(\overline{K_0}) = 1 - \frac{X_{m0} \cdot Im(\bar{B})}{[Re(\bar{B})]^2 + [Im(\bar{B})]^2}$$

(Equation 61)

$$Im(\overline{K_0}) = \frac{-X_{m0} \cdot Re(\overline{B})}{[Re(\overline{B})]^2 + [Im(\overline{B})]^2}$$

(Equation 62)

Use of different setting groups on double circuit lines

Each of the REx 5xx line-protection terminals has a built-in possibility for setting and activating four different groups of setting parameters according to the system conditions. Different setting groups can also suit different operating conditions of a multicircuit, parallel operating line.

The advantage of such an approach is a better coverage of the line during normal and abnormal operating conditions.

The parallel circuit out of operation with both ends earthed

Apply the same measures as in the case with a single set of setting parameters. This means that an underreaching zone must not overreach the end of a protected circuit for the single-phase-to-earth faults. Set the values of the corresponding zone (zero-sequence resistance and reactance) equal to:

$$R_{0E} = R_0 \cdot \left(1 + \frac{X_{m0}^2}{R_0^2 + X_0^2}\right)$$

(Equation 63)

$$X_{0E} = X_0 \cdot \left(1 - \frac{X_{m0}^2}{R_0^2 + X_0^2}\right)$$

(Equation 64)

Double-circuit parallel line in normal operation

Normally, the underreaching zone of distance protection underreaches for the single-phase-to-earth faults located closer to the opposite end of the circuit. To overcome this underreaching and trip without a sequential tripping for the faults along the greatest possible percentage of a line, increase the value of the equivalent zero-sequence impedance to the one also recommended for the overreaching zones. This means that the values of the equivalent zero-sequence resistance and reactance are equal to:

$$R_{0E} = R_0 + R_{m0}$$

(Equation 65)

$$X_{0E} = X_0 + X_{m0}$$

(Equation 66)

Overreaching distance protection zones

The same rules apply to the overreaching zones as in cases with a single set of setting parameters. Ensure that they will always overreach. So increase the setting of the zero-sequence resistance and reactance to the values that correspond to at least:

$$R_{0E} = R_0 + R_{m0}$$

(Equation 67)

$$X_{0E} = X_0 + X_{m0}$$

(Equation 68)

In many cases, it is sufficient if the influence of the zero-sequence mutual impedance is compensated only in the first overreaching zone (generally, zone 2). The setting of the back-up overreaching zones (zone 3 and higher) is usually so high that no such compensation is necessary.

Instructions for overreaching zones are applicable for normal network configurations. Always reconsider their settings if any special lines or other elements (cables, power transformers, etc.) follow the double-circuit, parallel operating line.

Pay special attention to the distance protection of double-circuit, parallel operating multiterminal or tapped lines.

Setting of the reach in resistive direction

Set the resistive reach independently for each zone, and separately for phase-to-phase, and phase-to-earth loop measurement.

Set separately the expected fault resistance for phase-to-phase faults (RFPP) and for the phase-to-earth faults (RFPE) for each zone. Set all remaining reach setting parameters independently of each other for each distance zone.

The final reach in resistive direction for phase-to-earth fault loop measurement automatically follows the values of the line-positive and zero-sequence resistance, and at the end of the protected zone is equal to:

$$R = \frac{1}{3}(2 \cdot R1Zn + R0Zn) + RFNZn$$

(Equation 69)

The blinder in the resistive direction forms an angle with the R-axis equal to:

$$\varphi_{loop} = \arctan\frac{2 \cdot X_1 + X_0}{2 \cdot R_1 + R_0}$$

(Equation 70)

Setting of the resistive reach for the underreaching zone 1 should follow the condition:

$$RFPE \leq 4.5 \cdot X1PE$$

(Equation 71)

The fault resistance for phase-to-phase faults is normally quite low, compared to the fault resistance for phase-to-earth faults. Limit the setting of the zone 1 reach in resistive direction for phase-to-phase loop measurement to:

$$RFZ1 \leq 3 \cdot X1Z1$$

(Equation 72)

Load impedance limitation

Check the maximum permissible resistive reach for any zone to ensure that there is a sufficient setting margin between the relay boundary and the minimum load impedance.

The minimum load impedance [Ω/phase] is calculated as:

$$Z_{loadmin} = \frac{U^2}{S}$$

(Equation 73)

Where:

U	is the minimum phase-to-phase voltage in kV
S	is the maximum apparent power in MVA

The load impedance [Ω/phase] is a function of the minimum operation voltage and the maximum load current:

$$Z_{load} = \frac{U_{min}}{\sqrt{3} \cdot I_{max}}$$

(Equation 74)

Minimum voltage U_{min} and maximum current I_{max} are related to the same operating conditions. Minimum load impedance occurs normally under emergency conditions.

Note!

Because a safety margin is required to avoid load encroachment under three-phase conditions and to guarantee correct healthy phase relay operation under combined heavy three-phase load and earth faults, consider both: phase-to-phase and phase-to-earth fault operating characteristics.

To avoid load encroachment for the phase-to-earth measuring elements, the set resistive reach of any distance protection zone must be less than 80% of the minimum load impedance.

$$RFPE \leq 0.8 \cdot Z_{load}$$

(Equation 75)

This equation is applicable only when the loop characteristic angle for the single-phase-to-earth faults is more than three times as large as the maximum expected load-impedance angle. More accurate calculations are necessary according to the equation below:

$$RFPE \leq 0.8 \cdot Z_{loadmin} \cdot \left[\cos\vartheta - \frac{2 \cdot R1PE + R0PE}{2 \cdot X1PE + X0PE} \cdot \sin\vartheta\right]$$

(Equation 76)

Where

ϑ is a maximum load-impedance angle, related to the minimum load impedance conditions.

To avoid load encroachment for the phase-to-phase measuring elements, the set resistive reach of any distance protection zone must be less than 160% of the minimum load impedance.

$$RFPP \leq 1.6 \cdot Z_{loadr}$$

(Equation 77)

This equation is applicable only when the loop characteristic angle for the phase-to-phase faults is more than three times as large as the maximum expected load-impedance angle. More accurate calculations are necessary according to the equation below:

$$RFPP \leq 1.6 \cdot Z_{loadmin} \cdot \left[\cos\vartheta - \frac{R1PP}{X1PP} \cdot \sin\vartheta\right]$$

(Equation 78)

All this is applicable for all measuring zones when no power swing detection element is in the protection scheme. Use an additional safety margin in cases when a power-swing detection element is in the protection scheme; see document “Power swing detection”.

Setting of minimum operating current

Minimum operating fault current IMinOp defines the sensitivity of the distance protection as built in REx 5xx terminals. Default setting value, which is 20% of basic terminal current, proved in practice as the optimum value for the most of applications.

Sometimes it is necessary to increase the sensitivity by reducing the minimum operating current down to 10% of terminal basic current. This happens especially in cases, when the terminal serves as a remote back-up protection on series of very long transmission lines.

The minimum operating fault current is automatically reduced to 75% of its set value, if the distance protection zone has been set for the operation in reverse direction.

Setting of timers for the distance protection zones

The required time delays for different distance-protection zones are independent of each other. Distance protection zone 1 can also have a time delay, if so required for selectivity reasons. One can set the time delays for all zones (basic and optional) in a range of 0 to 60 seconds. The tripping function of each particular zone can be inhibited by setting the corresponding Operation parameter to Off. Different time delays are possible for the ph-E (tnPE, n = 1...5) and for the ph-ph (tnPP, n = 1...5) measuring loops in each distance protection zone separately, to further increase the total flexibility of a distance protection.

Setting the directional lines

ArgDir and ArgNegRes setting parameters define the position of the directional lines in impedance plane (see figure 43). Their default values are 15° and 25° respectively and should not be changed unless the simulation studies for the application on very long and heavilly loaded transmission lines show the need to change them accordingly.

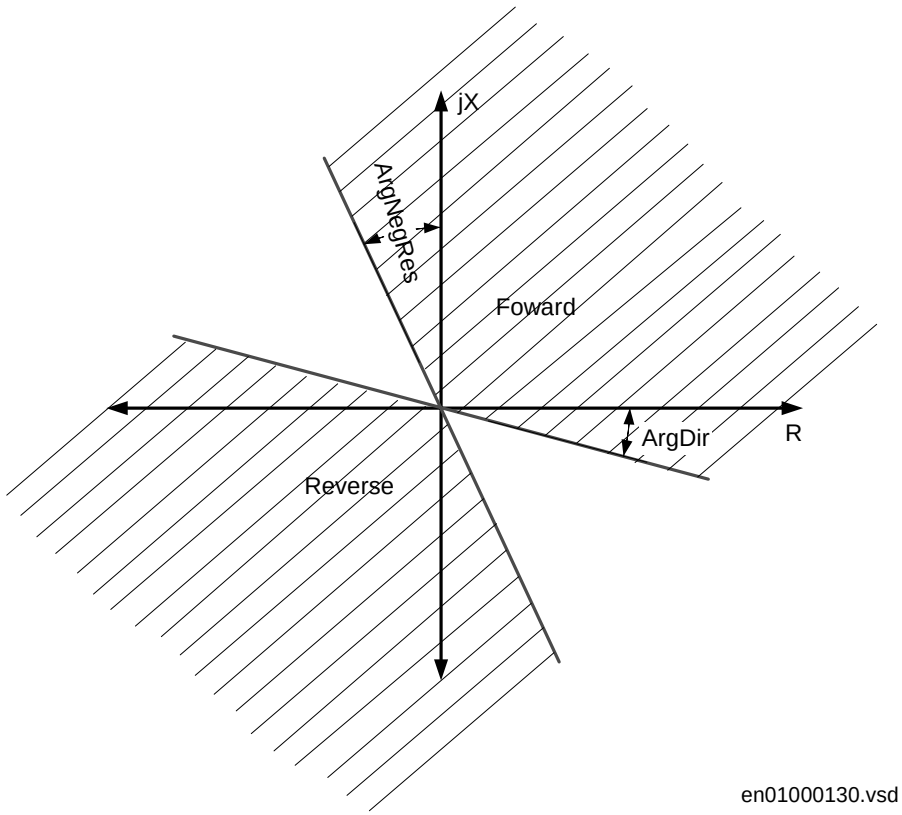

Figure 43: Directional lines define the forward and reverse operating area for each distance protection zone

Simplified operating characteristic

Distance protection operating characteristic follows with its reach in resisitive direction automatically the line charcateristic angle. The R1PP setting parameters influences the line characateristic angle for the phase-to-phase measurement while R1PE and R0PE influence the characteristics for the phase-to-earth faults.

The operating charatceristic for phase-to-phase faults becomes independent on line characteristic angle when RFPP is set to its minimum possible value (0.1 ohm for terminals with rated current Ir = 1A and 0.02 ohm for terminals with rated current Ir = 5A). Similarly becomes independent the operating characteristic for phase-to-earth faults, when R1PE and R0PE are set to their minimum values. In such case it is necessary to consider the reduction of a fault resistance coverage for the faults at the end of the protection zone. The simplified operating characteristic is schematically presented on

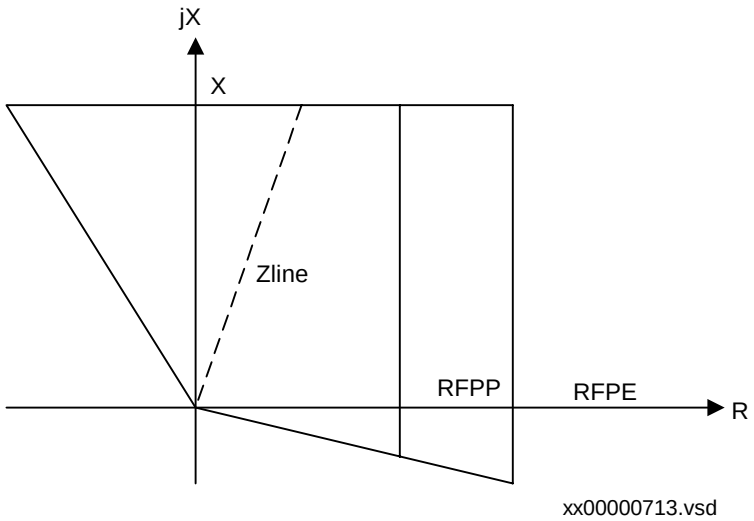

Figure 44: Simplified operating characteristic with R1PP or (R1PE and R0PE) or (R1 and R0 with simplified setting parameters) are set to their minimum values

Set of simplified setting parameters

All statements presented under this subject apply also in case when the set of simplified setting parameters has been ordered instead of a complete set. It is only necessary to consider the fact, that in this case the reactive reach setting is equal for the phase-to-phase as well as for the phase-to-earth measuring elements. This way the setting parameter X1 replaces the parameters X1PP and X1PE. Similarly replaces X0 the X0PE parameter.

1.5 Configuration

1.5.1 Basic configuration

Each distance protection zone comprises different functional inputs, which influence its operation in different ways.

ZMn--BLOCK functional input

Logical one on ZMn--BLOCK functional input blocks completely the operation of the distance protection zone. The input should be connected to the functional outputs of those protection and logic functions, which are supposed to block instantaneously and completely the operation of the zone. Functional output PSD--START of the power swing detection function is a typical example.

ZMn--VTSZ functional input

The operation of the distance protection function must be blocked in cases of different faults within the secondary voltage measuring circuits. The ZMn-VTSZ functional input should be configured to the functional output FUSE-VTSZ of the fuse-failure supervision function or to the binary inputs of a terminal, connected to the output contacts of external fuse-failure relays and MCBs.

ZMn--BLKTR functional input

The ZMn--BLKTR functional input blocks only the tripping function of each particular distance protection zone, but it does not block its measurement and starting output signals. It is possible to use it in different cases together with internal logic circuits for different application purposes.

ZMn--STCND functional input

The ZMn--STCND functional input brings into each distance protection zone information on external measuring conditions, which influence the zone operation. It is necessary to configure it to one of the following functional outputs within the terminal:

- PHS--STCNDI functional output of the phase selection function. The operation of the distance protection zone depends in this case only on the fault current conditions, as used for the operation of the phase selection elements (see the document “Phase selection for distance protection”).
- PHS--STCNDZ functional output of the phase selection function. The operation of the distance protection depends in this case on the operation of different phase selection elements for a particular fault. The fault must be seen by the phase selection impedance measuring elements, to release the operation of the distance protection zone (see the document “Phase selection for distance protection”).
- GFC--STCND functional output of the general fault criteria (GFC). The operation of a particular distance protection zone is released only, if the fault has been detected also within the operating characteristic of a GFC element (see the document “General fault criteria”).
- FIXD-INTONE functional integer output signal. The operation of a particular distance protection function does not depend in this case on any external current or impedance measuring condition. All measuring loops are permitted to operate only on the basis of the measured impedance for a particular fault conditions.

ZMn--START functional output

The ZMn--START functional output becomes logical one at any detection of the measured impedance within a particular distance protection zone. It is not time delayed. It is possible to configure it as an input signal to the scheme communication logic (as a carrier send signal) or for a signalling purposes.

Phase selective starting signals (ZMn--STL1, ZMn--STL2, and ZMn--STL3) are available in units with built-in single pole tripping function. They have the same functionality as the general starting signal ZMn--START with the addition, that they always relate to a specific faulty phase.

ZMn--TRIP functional output

The ZMn--TRIP functional output represents a time delayed operation of a particular distance protection zone. It is generally used for tripping purposes. It is also possible to configure the trip output signals of time-delayed distance protection zones to the inhibit conditions of the autoreclosing function, when used within the terminal.

Phase selective tripping signals (ZMn--TRL1, ZMn--TRL2, and ZMn--TRL3) are available in units with built-in single pole tripping function. They have the same functionality as the general tripping signal ZMn--TRIP with the addition, that they always relate to a specific faulty phase.

ZMn--STND functional output

Informs about the non-directional start of the distance protection zone (see figure in “Basic characteristics”). It is possible, among others, to configure it to the functional input SOTF-NDACC functional input of the switch-onto-fault function.

2 Automatic switch onto fault logic (SOTF)

2.1 Application

The switch-onto-fault function is a complementary function to the distance protection function (ZMn--) and to the high-speed protection function (HS---).

With the switch-onto-fault (SOTF-) function, a fast trip is achieved for a fault on the whole line, when the line is being energized. The SOTF tripping is generally non-directional in order to secure a trip at a nearby three-phase fault when a line potential transformer is used.

Automatic activation can be used only when the potential transformer is situated on the line side of a circuit breaker.

2.2 Functionality

The switch-onto-fault function can be activated either externally or automatically, internally, by using the information from a dead-line-detection (DLD) function (see figure 45).

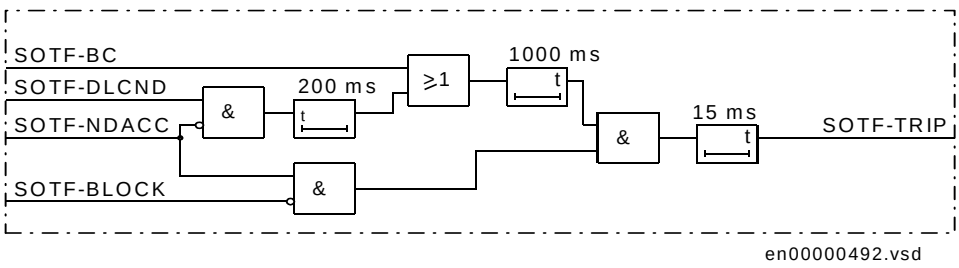

Figure 45: SOTF function - simplified logic diagram

After activation, a distance protection zone (usually its non-directional starting signal) is allowed to give an instantaneous trip. The functional output signal ZMn--STND (n represents the corresponding zone number) should be connected to the SOTF-NDACC functional input of the SOTF function, see figure 45. The distance protection zone used together with the switch-onto-fault function shall be set to cover the entire protected line. Always use distance protection zone 5 as a criteria for the SOTF function, if the high-speed protection function is used in the REx 5xx line protection terminal. It is also suggested to use the distance protection zone 5, when faster operation of SOTF function is required. The non-directional instantaneous condition is maintained for 1 s after closing the line circuit breaker.

The external activation is achieved by an input (SOTF-BC), which should be set high for activation, and low when the breaker has closed. This is carried out by an NC auxilliary contact of the circuit breaker or by the closing order to the breaker.

The internal automatic activation is controlled by the DLD function and its functional output DLD--START. The DLD--START functional output is activated when all three phase voltages and phase currents have been below their set operate values. The DLD--START functional output is usually configured to the SOTF-DLCND functional input. It activates the operation of the SOTF function, if present for more than 200 ms without the presence of a non-directional impedance starting signal SOTF-NDACC.

Operation of a SOTF function can be blocked by the activation of a SOTF-BLOCK functional input.

2.3 Calculations

2.3.1 Setting instructions

The operation of a switch-onto-fault function is set in the menu tree:

Settings
Functions
Group n (n=1-4)
Impedance
SwitchOntoFlt

The low voltage and low current criteria for automatic activation is settable under the DLD-- function under the menu tree:

Settings
Functions
Group n (n=1-4)
DeadLineDet

This setting is not critical as long as it is lower then the lowest operation voltage during normal and emergency conditions.

The distance protection zone used for a switch-onto-fault criterion (SOTF zone) have to be set to cover the entire protected line with a safety margin of minimum 20%.

3 Local acceleration logic (ZCLC)

3.1 Application

To achieve fast clearing of faults on the whole line, also in cases where no communication channel is available, local acceleration logic is used. This logic enables fast fault clearing during certain conditions, but naturally, it can not fully replace a communication channel.

The logic can be controlled either by the auto-recloser (zone extension) or by the loss of load current (loss-of-load acceleration).

3.2 Functionality

Zone extension

When the auto-recloser controls the function, a signal “auto-recloser ready” (ZCLC-ARREADY) allows an overreaching zone (ZCLC-EXACC) to trip instantaneously (see figure 46). For this reason, configure the ZCLC-ARREADY functional input to a AR0n-READY functional output of a used auto-reclosing function or via the selected binary input to an external autoreclosing device.

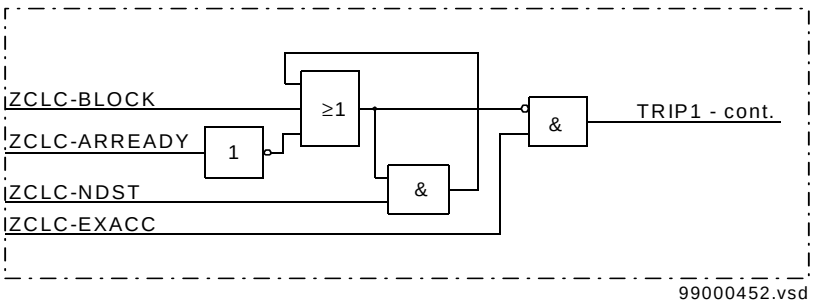

Figure 46: Simplified logic diagram for the local acceleration logic

After the auto-recloser initiates the close command and remains in the reclaim state, there will be no ZCLC-ARREADY signal, and the protection will trip normally with step distance time functions. In case of a fault on the adjacent line within the overreaching zone range, an unwanted auto-reclosing cycle will occur. The step distance function at the reclosing attempt will prevent an unwanted retrip when the breaker is reclosed. On the other hand, at a persistent line fault on line section not covered by instantaneous zone (normally zone 1) or on adjacent line, only the first trip will be “instantaneous”.

Loss-of-load acceleration

When the “acceleration” is controlled by a loss of load, the overreaching zone used for “acceleration” (ZCLC-LLACC) is not allowed to trip “instantaneously” during normal non-fault system conditions. When all three-phase currents have been >10% of Ir for more than 35 ms, an overreaching zone will be allowed to trip “instantaneously” during a fault condition when one or two of the phase currents will become low due to a three-phase trip at the opposite terminal, see figure 47. The current measurement is performed internally in one of the built-in digital signal processors and the STILL signal becomes logical one under the described conditions. The load current in a healthy phase is in this way used to indicate the tripping at the opposite terminal. Note that this function will not operate in case of three-phase faults, because none of the phase currents will be low when the opposite terminal is tripped.

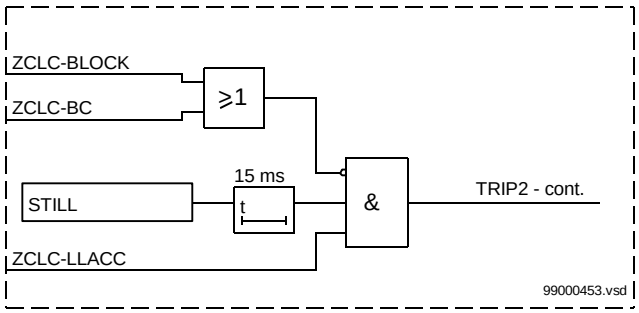

Figure 47: Loss-of-load acceleration - simplified logic diagram

3.3 Calculations

3.3.1 Setting instructions

The operation of the local acceleration functions is set in the menu under:

Setting
Functions
Group n (n=1-4)
Impedance
ComLocal

To allow the “overreaching” trip controlled by the auto-recloser at earth-faults only, the zone used for this function can be set with a normal reach of 85% for phase-to-phase faults, but with an increased X1PE and X0PE setting that gives an overreach for earth-faults. This setting generally excludes the use of this zone for any purpose other than local acceleration logic.

4 General fault criteria (GFC)

4.1 Application

General fault criterion is a basic function in line protection terminals REL 501 and REL 511 as well as in their C-series variants. The following description is relevant for all of them, with the exception of all functionality for the earth-faults related to REL 501 and its C-series variants. It is also possible to apply it to different other, customer specific REx 5xx terminals. Please, check the ordering details for each specific terminal.

The distance protection function remains the most widely used protection function in all networks. It is a common practice to have two line protection units installed on the transmission, and in many cases also on the subtransmission lines, to achieve a sufficient degree of availability for the selected protection system. The remote back-up protection systems play an important, but not essential role.

A different type of practice is applied in distribution and in certain subtransmission networks. Here, the economical reasons dictate the use of a single line protection at each line end. If it is a line differential protection, which depends very much on the availability of a communication link, it is necessary to add a relative selective protection scheme (distance protection), either locally as a local backup, or also on all the adjacent lines, as a remote back-up.

Therefore, the security of the used protection schemes is very important. Many utilities require that two different measuring elements - which must operate for the same fault - are built into the existing distance relays.

- The first one is generally an overall impedance measuring element with a very high reach and a long time delay for its tripping function. Since many older distance relays used for these purposes are switched scheme relays and these overall measuring elements are used for the course detection of a fault type and starting the zone measurement and related timers, they are called starting elements.
- The second measuring element must measure impedance in the fault loop more precisely, according to the selectivity planning in the network. In the existing protection schemes, these measuring relays are called measuring elements, and usually only one of them is built into each of the conventional distance relays.

The distance protection, as built into the REx 5xx line protection terminals, is a full scheme distance protection (see the document “Distance protection”. This means that it has separate and independent measurement for each separate fault loop in each respective distance protection zone. Besides the full scheme design, separate measuring elements can be added to perform the functions of the overall measuring elements in the existing protection schemes. They determine only whether there is a fault in the bigger part of a network around the terminal. They are therefore called “General fault criteria” elements (GFC).

The underimpedance based GFC function has an advanced operate characteristic as presented principally in figure 48. The overcurrent based GFC function has built-in separate phase and residual current measuring elements. It is also possible to use both the underimpedance and overcurrent criteria at the same time. Please, refer to the ordering particulars for each terminal separately for more details about the included options.

Settings of the reach for impedance based GFC elements are independent of each other to the greatest possible extent. It is therefore possible to set the reactive reach in reverse direction independent of the one in forward direction. It is also possible to set different reactive reach for the phase-to-phase and for the phase-to-earth measurement. The zero-sequence reactance for the setting of the reach in forward and reverse direction can differ from one another. The algorithm calculates automatically the earth return compensation according to the set values.

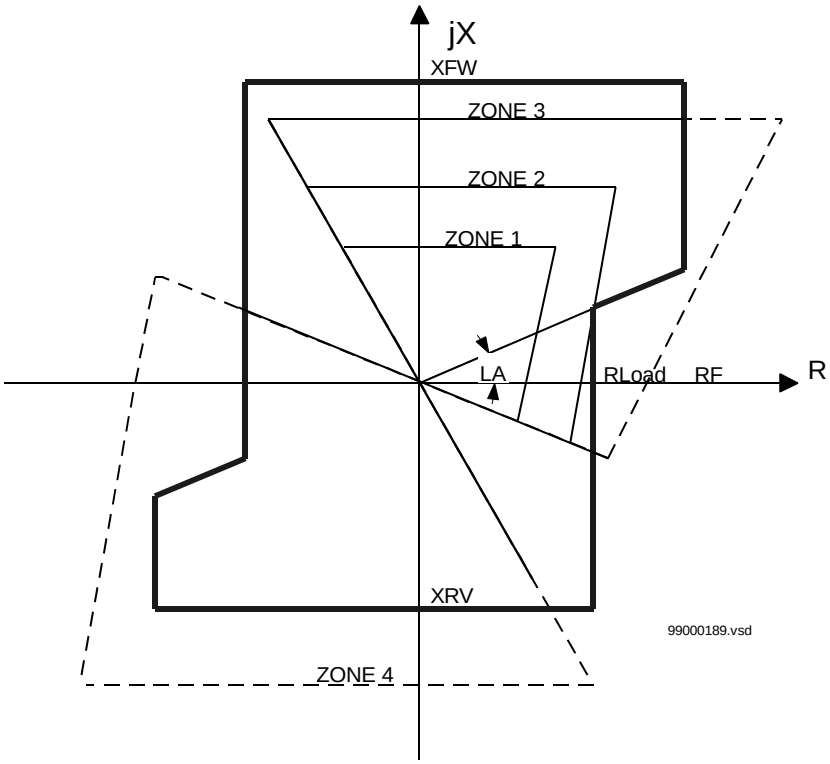

Figure 48: Operating characteristics of the GFC (impedance measuring principle) and zone measuring elements

Figure 48 presents principally a shaped operate characteristic for an impedance based GFC function. Different designations have the following meaning:

- XFW: reactive reach in forward direction
- XRV: reactive reach in reverse direction
- RF: resistive reach within the unlimited area
- RLoad: resistive reach restricted by the minimum load impedance
- LA: expected load impedance angle

The setting of the resistive reaches is independent of that of the reactive reaches. It is possible to have the resistive reach different for phase-to-earth (ph - E) and phase-to-phase (ph-ph) or three-phase faults. To make the GFC function as sensitive as possible to faults with higher fault resistances, a separate setting of the reach in resistive direction in the possible load impedance area has been introduced. In addition to this, a characteristic is also adaptable to the possible load impedance with a settable load impedance angle.

4.2 Functionality

Impedance measuring elements

The basic algorithm for the operation of the impedance based GFC is the same as that for the distance protection measuring function (see section “Distance protection”.) The difference, compared to the zone-measuring elements, is in the combination of the measuring quantities (currents and voltages) for different types of faults.

Measuring elements for the ph-E faults

The GFC elements for the ph-E faults measure the impedance according to the following equation:

$$\overline{Z_{MLn}} = \frac{\overline{U_{Ln}}}{\overline{I_{Ln}} \cdot (1 + K_{NF})}$$

(Equation 79)

Where:

U_{LN} is a phasor of measured voltage in phase Ln

I_{LN} is a phasor of measured current in phase Ln

K_{NF} is an earth return compensation factor, calculated automatically according to the equation:

$$K_{NF} = \frac{X0FwPE - X1FwPE}{3 \cdot X1FwPE}$$

(Equation 80)

Where:

X1FwPE and X0FwPE — are the reactive reach setting parameters for forward direction.

A separate earth return compensation is calculated according to similar formula with the reactive reach setting parameters for reverse direction, X1RvPE and X0FwRv respectively.

The operation of the corresponding measuring loop occurs, when the following conditions are satisfied.

$$Im(\overline{Z_{MLn}}) < X1FwPE$$

(Equation 81)

and

$$X1RvPE < Im(\overline{Z_{MLn}})$$

(Equation 82)

as well as:

$$\left|Re(\overline{Z_{MLmLn}})\right| < \frac{RFPE}{1+K_{NF}}$$

(Equation 83)

The resistive reach is limited within the load impedance area, which is defined by the load angle ARGLd. The resistive reach conditional equation changes in this case to:

$$\left|Re(\overline{Z_{MLn}})\right| < \frac{RLd}{1+K_{NF}}$$

(Equation 84)

Where:

RLd	is a set resistive reach within the load impedance area.

Besides this, the relation between the measured currents must correspond to the following conditions:

$$I_{ph} > 0.5 \cdot IMinOp$$

(Equation 85)

and

$$3 \cdot I_0 > 0.5 \cdot IMinOp$$

(Equation 86)

and

$$3 \cdot I_0 > \frac{INReleasePE}{100} \cdot I_{phmax} \Rightarrow IN1$$

(Equation 87)

Where:

IMinOp	is the set value of a minimum operating current for the distance protection
I_{phmax}	is a maximum current among all three phase currents.
INReleasePE	is the setting for the minimum residual current needed to enable operation in the ph-E fault loops (in %)
IN1	is a corresponding logic signal.

Measuring elements for ph-ph and three-phase faults

The GFC elements for the ph-ph faults measure the impedance according to the equation

$$\overline{Z_{MLmLn}} = \frac{\overline{U_{Lm}} - \overline{U_{Ln}}}{\overline{I_{Lm}} - \overline{I_{Ln}}}$$

(Equation 88)

The operation occurs under the following conditions:

$$Im(\overline{Z_{MLmLn}}) < X1FwPP$$

(Equation 89)

and

$$X1RvPP < Im(\overline{Z_{MLmLn}})$$

(Equation 90)

as well as:

$$\left|Re(\overline{Z_{MLmLn}})\right| < \frac{RFPE}{1+K_{NF}}$$

(Equation 91)

Where:

X1FwPP	is a forward reactive reach for the phase-to-phase measurement
X1RvPP	is a reverse reactive reach for the phase-to-phase measurement
RFPP	is an unlimited resistive reach for the phase-to-phase measurement

The resistive reach is limited within the load impedance area, which is defined by the load angle ARGLd. The resistive reach conditional equation changes in this case to:

$$\left|Re(\overline{Z_{MLmLn}})\right| < \frac{RLd}{2}$$

(Equation 92)

Besides this, the relation between the measured currents must correspond to the following conditions:

$$I_{ph-ph} > IMinOp$$

(Equation 93)

and

$$3 \cdot I_0 < (0,2 \cdot I_r)$$

(Equation 94)

or

$$3 \cdot I_0 < \frac{INBlockPP}{100} \cdot I_{phmax} \Rightarrow IN2$$

(Equation 95)

I_r is the rated current of the terminal and IN2 is a corresponding logic signal. $I_{phmax}$is the maximum current of all three phase currents. INBlockPP is the setting for the residual current level below which operation of the ph-ph fault loops is allowed. I_{ph-ph} is a difference of phase currents in observed faulty phases.

Current-based GFC elements

The current-based GFC measuring elements measure continuously three phase currents and the residual current, comparing them with the set values. Fourier's recursive filter filters the current signals, and a separate trip counter prevents too high overreaching of the measuring elements.

If I_{lim} is a set value of the operating current for the phase measuring elements (designated by I> in the terminal), and I_{Nlim} for the measuring element that measures the residual current (designated by IN> in the terminal), the operating conditions are as follows:

$$I_{L1} > I_{lim} \Rightarrow IL1$$

(Equation 96)

for the phase L1 current measuring element

$$I_{L2} > I_{lim} \Rightarrow IL2$$

(Equation 97)

for the phase L2 current measuring element

$$I_{L3} > I_{lim} \Rightarrow IL3$$

(Equation 98)

for the phase L3 current measuring element

$$3 \cdot I_0 > I_{Nlim} \Rightarrow IN$$

(Equation 99)

for the residual current measuring element

where ILn and IN are corresponding logical signals.

4.3 Design

A separate digital signal processor, independent of the zone measuring elements, performs the measurement for the general fault criteria. The built-in logic follows the following Boolean equations:

$$GFCL1 = I> \cdot IL1 + Z< \cdot IN1 \cdot ZML1 + Z< \cdot IN2 \cdot (ZML1L2 + ZML1L3)$$

(Equation 100)

$$GFCL2 = I> \cdot IL2 + Z< \cdot IN1 \cdot ZML2 + Z< \cdot IN2 \cdot (ZML2L3 + ZML1L2)$$

(Equation 101)

$$GFCL3 = I> \cdot IL3 + Z< \cdot IN1 \cdot ZML3 + Z< \cdot IN2 \cdot (ZML3L1 + ZML2L3)$$

(Equation 102)

GFCN = I> · IN + Z< · IN1 · ZML1 + ZML2 + ZML3

(Equation 103)

Where:

Z< represents active underimpedance mode of operation (setting)

I> represents active overcurrent mode of operation (setting)

Later on, the signals produced by the GFC measuring elements serve for different parts of the distance protection. These are:

- indication of the faulty phases
- phase selection for the zone measuring elements
- general criteria for the operation of the trip logic
- time delayed trip as a backup function to the zone measuring elements
- phase preference logic, when included in a terminal

Figure 49 presents basic logic circuits dealing with current conditions for the detection of ph-E and ph-ph faults (consider only the parts and signals, which correspond to the actual functionality of a used terminal)

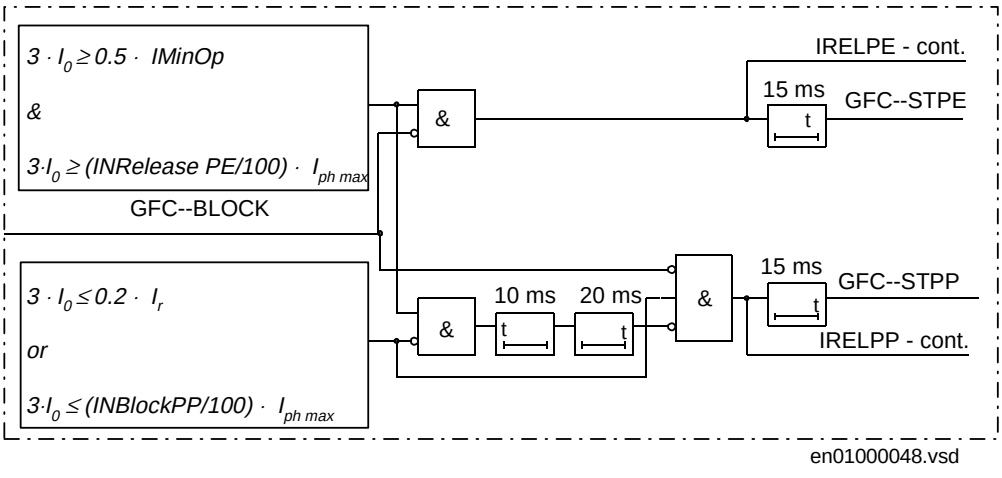

Figure 49: Detection of ph-E and ph-ph fault conditions

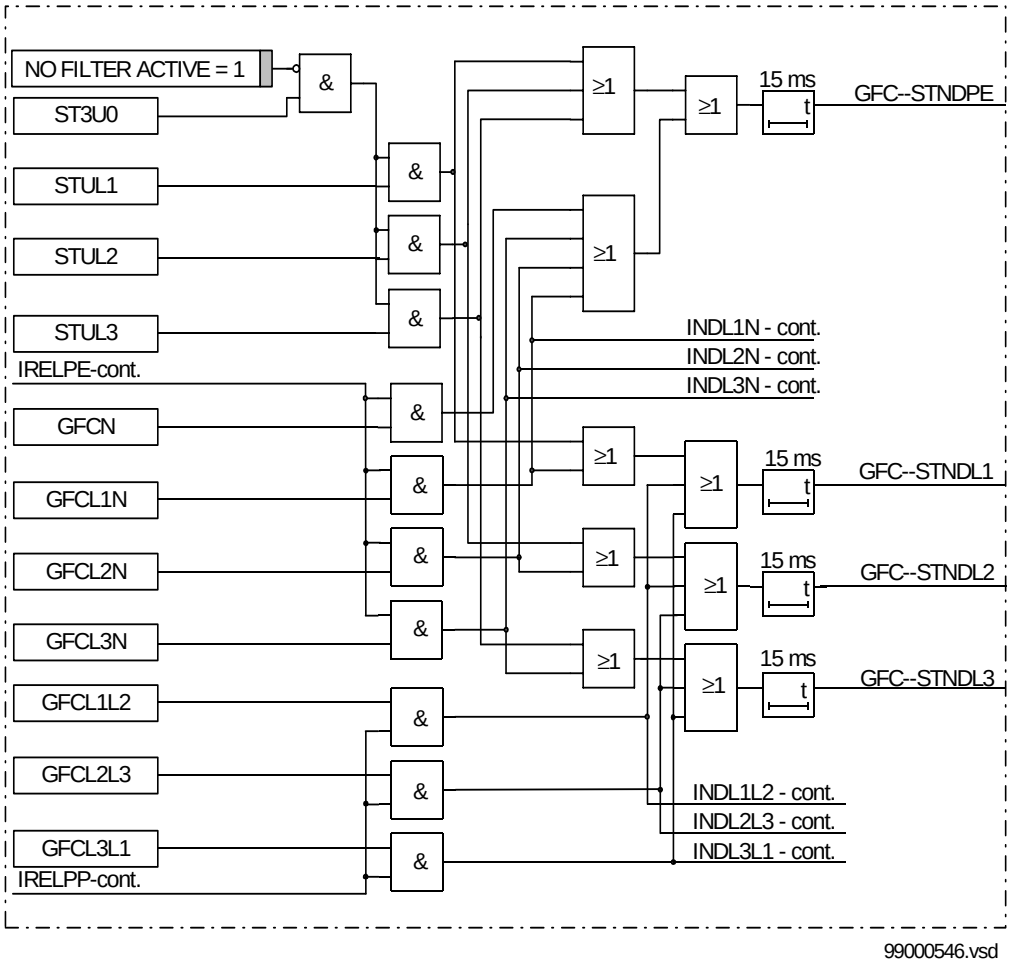

Figure 50: Composition of non-directional GFC signals

Figure 50 presents schematically the composition of non-directional general criteria signals GFC--STNDLn, where n presents the corresponding phase number. Signals GFCLnN and GFCLmLn (m and n change between 1 and 3 according to the phase number) represent the fulfilled operating criteria for each separate loop measuring element.

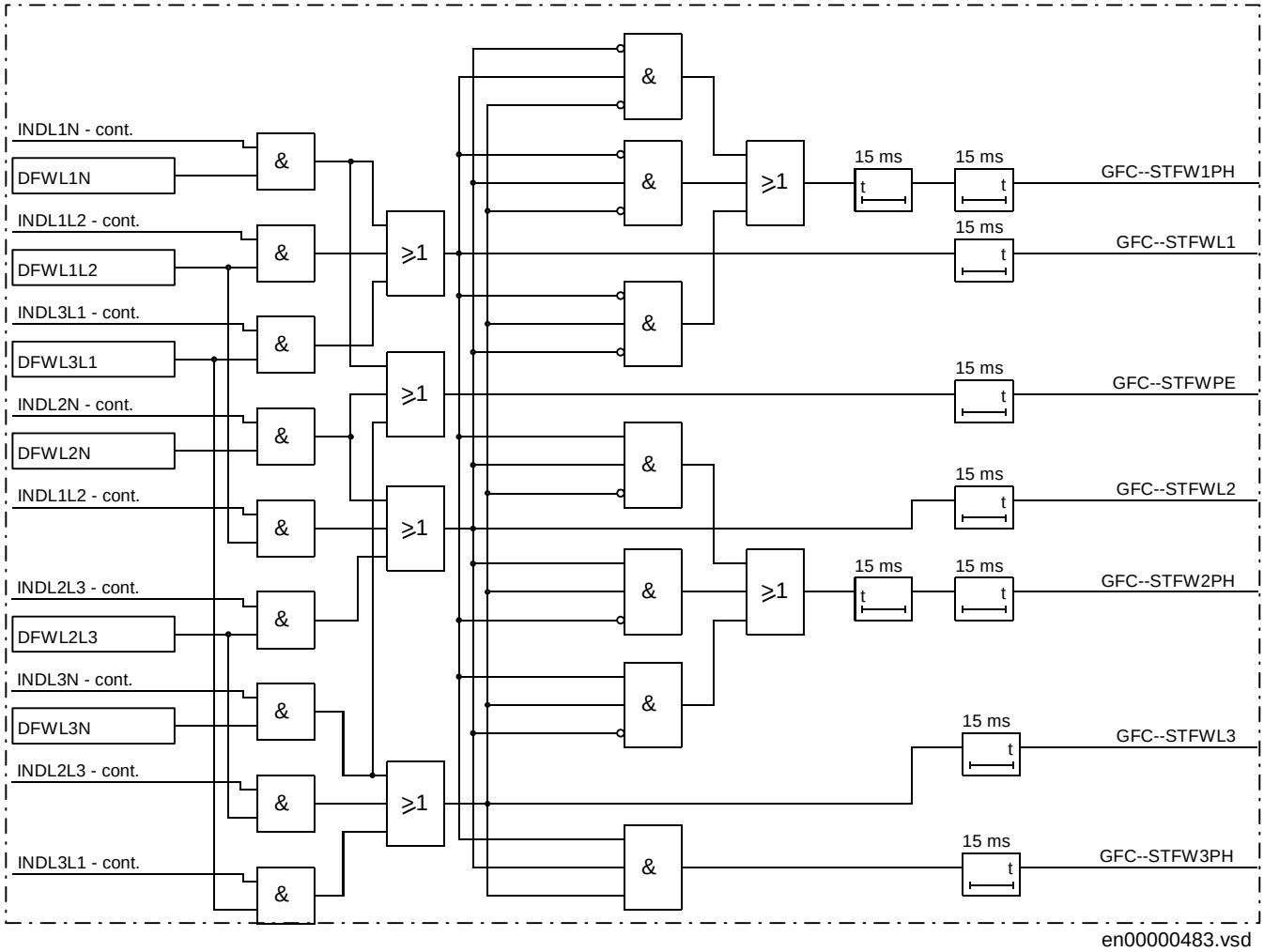

Figure 51: Composition of forward directed GFC signals.

Composition of the directional (forward and reverse) phase selective signals is presented schematically in figure 51 and figure 52. The directional criteria appears as a condition for the correct phase selection in order to secure a high phase selectivity for simultaneous and evolving faults on lines within the complex network configurations.

Signals DFWLn and DFWLnLm present the corresponding directional signals for measuring loops with phases Ln and Lm (m and n are running between 1 and 3). Designation FW (figure 51) represents the forward direction as well as the designation RV (figure 52) represents the reverse direction. All directional signals are derived within the corresponding digital signal processor.

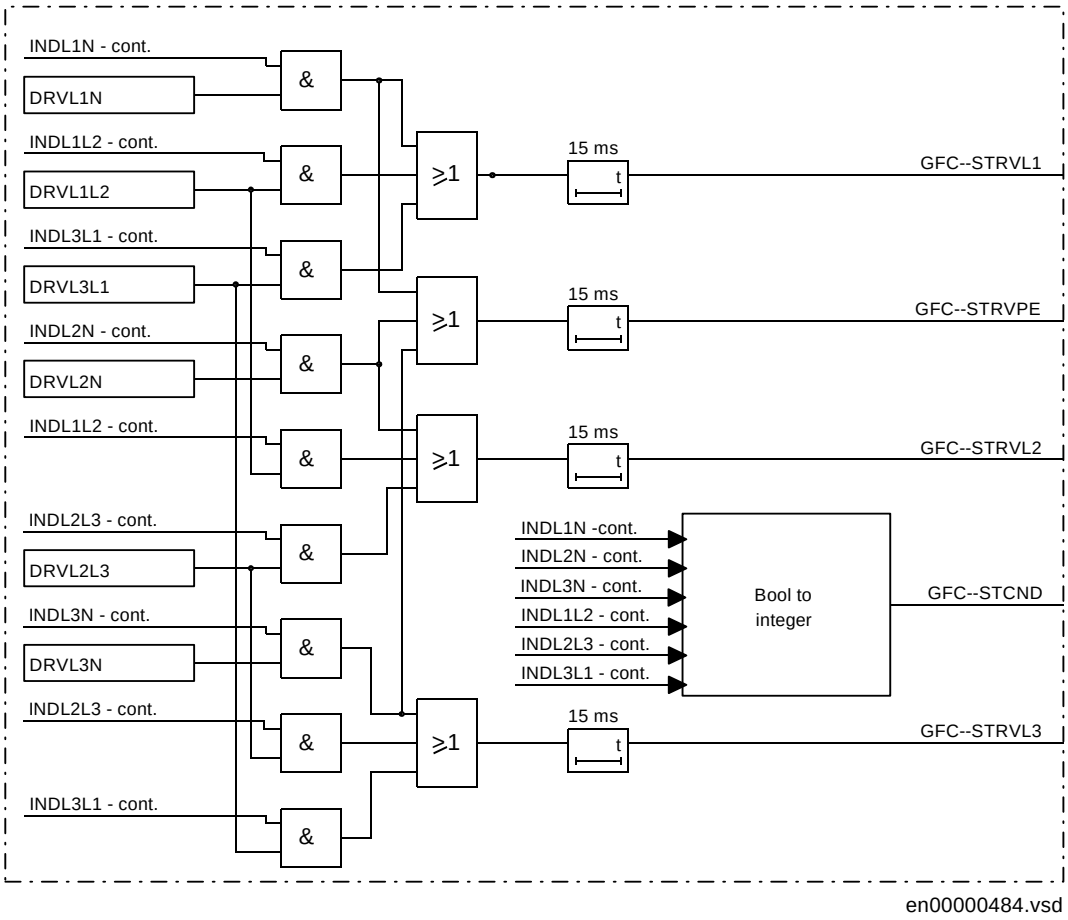

Figure 52: Composition of reverse directed GFC signals and measured impedance related zone starting conditions

Figure 53 presents a composition of a GFC tripping signal, which consists of two different conditions: earth fault and phase-to-phase fault operating conditions. Each path has its own timer (tPE and tPP), to further increase the flexibility of a complete function

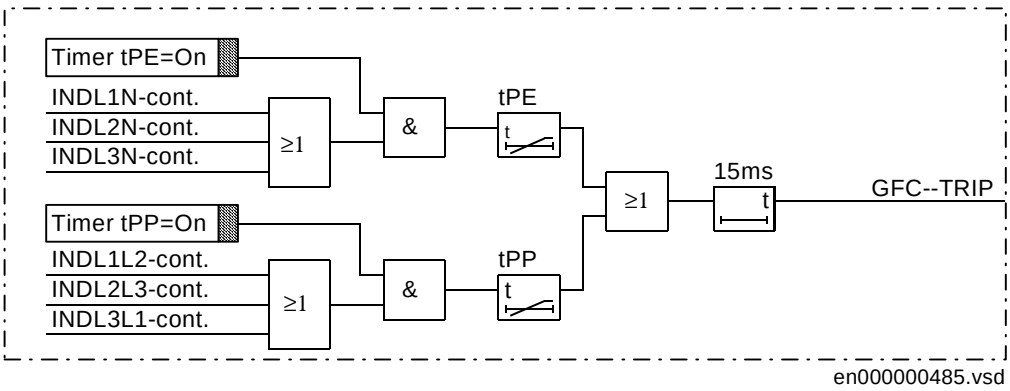

Figure 53: Composition of time-delayed tripping signal

Figure 54 presents a composition of a starting condition integer signal, which is supposed to be configured to the distance protection zones and their starting condition inputs (ZMn--STCND). The signal controls the operation of different measuring loops in each distance protection separately.

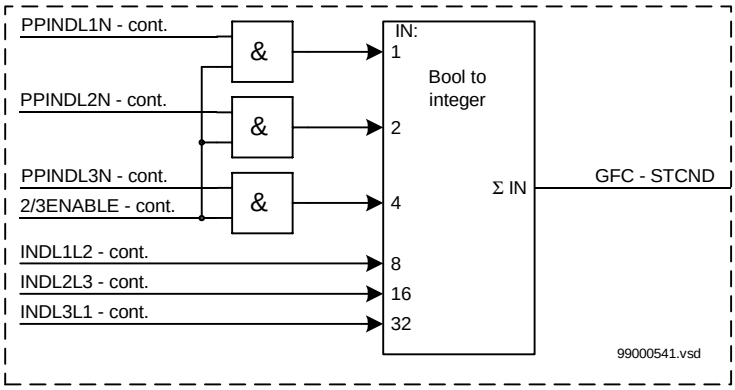

Figure 54: GFC start condition with phase preference

4.4 Calculations

4.4.1 Setting instructions

All the setting parameters for the GFC are available in the menu tree of the local HMI unit under the menu:

Settings
Functions
Group n
Impedance
GenFltCriteria

For the remote setting facilities and local HMI via a personal computer, please refer to the corresponding SMS or SCS documents.

The first parameter under the GFC is the operating mode, which is selectable among two different possibilities:

Operation Z< = On	the GFC will operate on an underimpedance basis
Operation I> = On	the GFC will operate on an over current basis

It is also possible to have active both operating modes at the same time. The available operating mode depends on the functions available within the terminal. Only one of two or both operating modes are available depending on ordering. Please, refer to ordering particulars for each terminal separately.

General setting parameters

Operation of the GFC measurement is enabled or disabled by setting the Operation = On or Off respectively. Setting the parameters Timer tPP and Timer tPE On or Off enables or disables the time delayed tripping, caused by the GFC measurement for the ph-ph and ph-E faults respectively.

If not the 2 out of 3 logic is active it is recommend to set Timer tPP and Timer tPE to Off in isolated or high-impedance earthed networks, if the distance protection is not intended or permitted to operate at single-phase-to-earth faults.

Setting of tPP and tPE timers define the tripping time delay of the GFC function, if activated.

Setting parameters for the I> mode of operation

The setting of the operating value for the overcurrent GFC phase measuring elements IP> must be higher than the maximum expected load current in the protected feeder. It is necessary to consider an additional margin of at least 10% to the declared inaccuracy of the current instrument transformers and measuring elements.

There will always be a certain low value of measured residual current 3I0 in the measuring circuits due to the differences in the current instrument transformers. Higher values can be expected on longer lines with a higher operating voltage. The presence of the close untransposed lines, where the zero-sequence mutual coupling effect is significant, will additionally increase the apparent residual current measured by the terminal.

Therefore, it is usually necessary to set the operating value of the earth-fault current measuring element IN> at a minimum of 10% of the line nominal current. The setting value must be increased on the longer, untransposed lines and in cases where the zero-sequence mutual coupling effect is significant.

Setting parameters for the Z< mode of operation

The setting instructions refer to the operating characteristic of the GFC elements as shown principally in a figure in “Application”. The GFC characteristic should, in general, cover all the impedance measuring zones used for the distance protection, regardless of their directionality.

The following parameters should be set for the GFC, operating in the underimpedance mode:

- X1FwPP is a positive-sequence reactance that corresponds to the reactive reach of the GFC elements in forward direction for ph-ph faults.
- X1FwPE is a positive-sequence reactance that corresponds to the reactive reach of the GFC elements in forward direction for ph-E fault (not available in REL 501).
- X0FwPE is a zero-sequence reactance that defines the total reactive reach of the GFC earth-fault loop measuring elements in forward direction (not available in REL 501) for the ph-E faults.
- X1RvPP is a positive-sequence reactance that corresponds to the reactive reach of the GFC elements in reverse direction for the ph-ph faults. We recommend having X1RvPP > =10% of X1FwPP in order to guaranty a correct measurement for close up faults.
- X1RvPE is a positive-sequence reactance that corresponds to the reactive reach of the GFC elements in reverse direction for the ph-E faults. We recommend having X1RvPE > = 10% of X1FwPE in order to guaranty a correct measurement for close up faults.
- X0RvPE is a zero-sequence reactance that defines the complete reactive reach of the GFC earth-fault loop measuring elements in reverse direction (not available in REL 501) for ph-E faults. We recommend having X0RvPE > =10% of X0FwPE in order to guaranty a correct measurement for close up faults.
- RFPP is the resistive reach of the GFC elements for multi-phase faults. It should be set as a loop value of the measured resistances, according to the formula:

$$RFPP > 2 \cdot R1PP + RF$$

(Equation 104)

Where:

R1PP	is a corresponding line positive sequence resistance
RF	is the expected fault resistance between two faulty phases.

- RFPE is the resistive reach of the GFC elements for the phase-to-earth-faults (not available in REL 501). It should be set as a loop value of the measured resistances, according to the formula:

$$RFPE > \frac{1}{3} \cdot (2 \cdot R1PE + R0PE) + RF$$

(Equation 105)

Where:

R1PE	is a corresponding line positive-sequence resistance
R0PE	is a corresponding line zero-sequence resistance
RF	is a fault resistance as expected for the single-phase-to-earth-faults.

- RLd is the resistive reach in the load impedance area. For the corresponding instructions, please refer to the “Setting instructions” for the distance protection function (document *Distance protection*). Observe the loop character of this setting parameter. It should be set generally to:

$$RLd < 1.6 \cdot R_{Lmin}$$

(Equation 106)

Where:

R_{Lmin} represents the minimum expected load resistance

- ARGLd is the maximum expected load angle that could appear under the maximum load conditions on a protected line. One of the following expressions can be used for its calculation:

$$ARGLd = acos\frac{P}{S} = asin\frac{Q}{S} = atan\frac{Q}{P}$$

(Equation 107)

Where:

S is the apparent power

P is the active power

Q is the reactive power

- Setting parameters INReleasePE and INBlockPP (both are settable in percentage of the terminal rated current Ir) control the operation of the phase-to-earth and the phase-to-phase measuring elements. They should in general be set to the default values, which are INReleasePE = 20%, and INBlockPP = 40%. Special system studies and calculations of fault currents are necessary in cases, when the remote end positive sequence source impedance is much higher than the zero sequence source impedance. The results of these studies may require in some special cases to set these parameters different from their default values.

5 Power swing detection (PSD)

5.1 Application

General

Various changes in power system may cause oscillations of rotating units. The most typical reasons for these oscillations are big changes in load or changes in power system configuration caused by different faults and their clearance. As the rotating masses strive to find a stable operate condition, they oscillate with damped oscillations until they reach the final stability.

The extent of the oscillations depends on the extent of the disturbances and on the natural stability of the system. The oscillation rate depends also on the inertia of the system and on the impedance between different generating units.

These oscillations cause changes in phase and amplitude of the voltage difference between the oscillating parts of the power system. This causes changes in power flow between two oscillating parts of the system - the power swings from one part to another - and vice-versa.

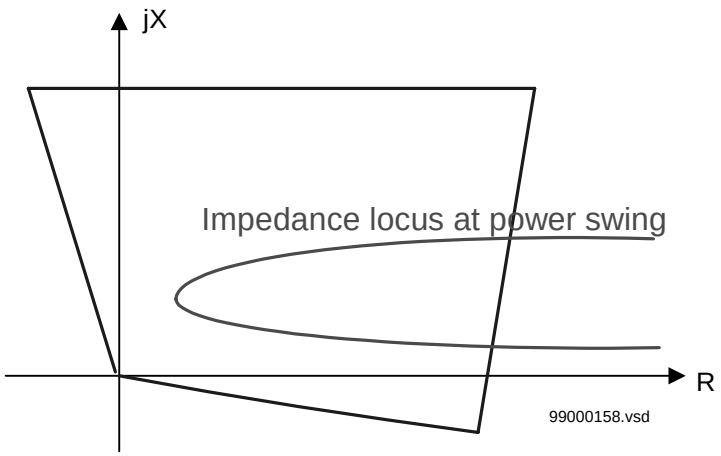

Figure 55: Impedance plane with the locus of the measured impedance and operate characteristics of the zone measuring elements.

Distance relays see these power swings as the swinging of the measured impedance in relay points. The measured impedance varies with time along a locus in an impedance plane (see figure 55). This locus can enter the operate characteristic of a distance protection and causes, if no preventive measures have been considered, its unwanted operation.

Basic characteristics

The power swing detection function (PSD) is optionally available in most of the REx 5xx terminals, which include also the line distance protection function. Please, refer to the ordering information for each terminal separately.

The PSD function detects reliably power swings with periodic time of swinging as low as 200 ms (i.e. slip frequency as high as 10% of the rated frequency on the 50 Hz basis). It detects the swings under normal system operate conditions as well as during dead-time of a single-pole reclosing cycle.

The function is able to secure selective operation for internal faults during power swings, when used together with optional power swing logic (PSL) and some additional functions, available within the REx 5xx terminals. The operation of the distance protection function remains stable for external faults during the power swing condition, even with the swing (electrical) centre on the protected line.

5.2 Functionality

5.2.1 Theory of operation

The operation of the PSD function is based on the measurement of the transition time needed for the transient impedance to pass the area between the outer and the inner impedance characteristic of the PSD function, see figure 56.

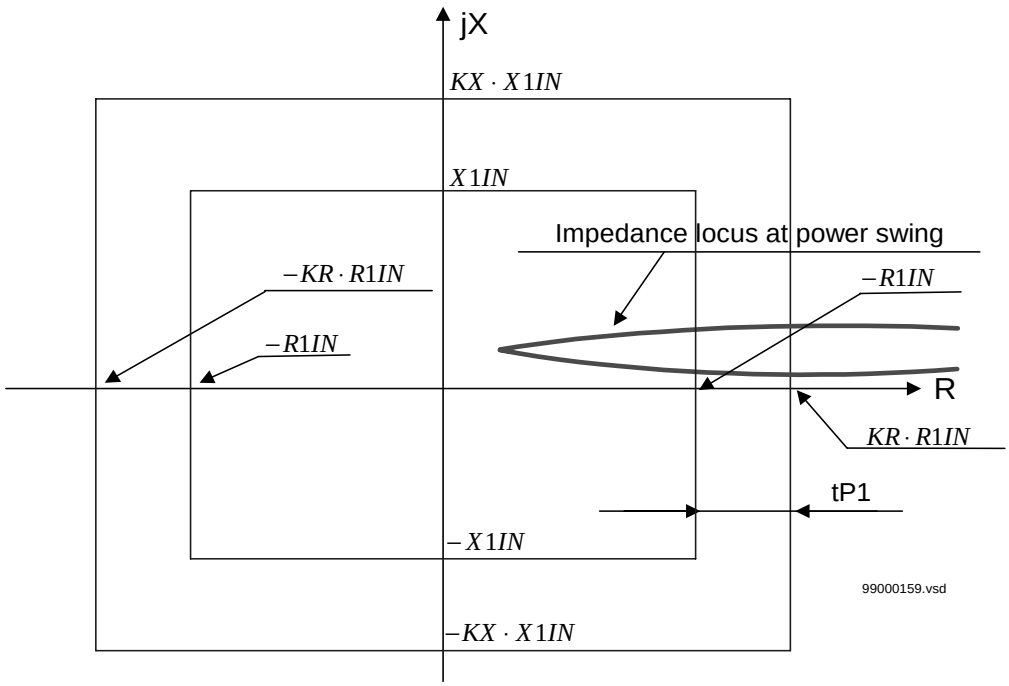

Figure 56: Operating principle and characteristic of the PSD function.

The impedance measuring principle is based on the same impedance measuring algorithm as used by the distance protection zone measuring elements (see the document “Distance protection”).

The impedance measurement within the PSD function is performed by solving the following equations (n = 1, 2, 3 for each corresponding phase):

$$\mathrm{Re}\left(\frac{\overline{U_{L1}}}{\overline{I_{L1}}}\right) \leq R_{set}$$

(Equation 108)

and

$$\mathrm{Im}\left(\frac{\overline{U_{L1}}}{\overline{I_{L1}}}\right) \leq X_{set}$$

Where:

X_{set} corresponds to the reactive reach setting values X1IN for the internal and (KX . X1IN) for the external operate characteristic of the PSD function and

R_{set} corresponds to the resistive reach setting values R1IN for the internal and (KR . R1IN) for the external operate characteristic.

5.3 Design

Basic detection logic

The PSD function can operate in two operating modes:

- The “1-of-3” operating mode is based on detection of power swing in any of three phases. Figure 57 presents a composition of a detection signal PSD-DET-L1 in this particular phase. The internal signal PSD-CONS.-int. is related to the same signal in figure
- The “2-of-3” operating mode is based on detection of power swing in at least two out of three phases. Figure 58 presents a composition of the detection signals DET1of3 and DET2of3.

Signals ZOUTLn (external boundary) and ZINLn (internal boundary) are related to the operation of the impedance measuring elements in each phase separately (Ln represents the corresponding phase L1, L2, and L3) They are internal signals, produced by the corresponding digital signal processors (DSPs).

All tP1 timers in figure 57 have the same settings. They serve the detection of initial power swings, which are usually not as fast as the later swings are. The tP2 timers become activated for the detection of the consecutive swings if the measured impedance exits the operate area and returns within the time delay, set on the tW waiting timer. All tP2 timers in figure 57 have the same setting.

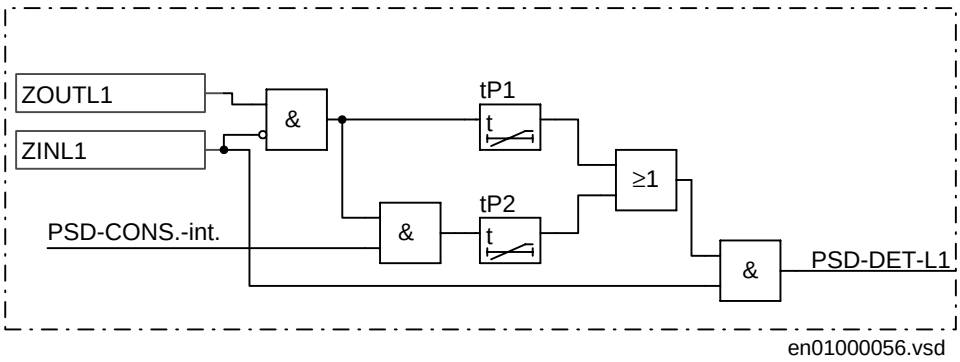

Figure 57: Detection of power-swing in phase L1.

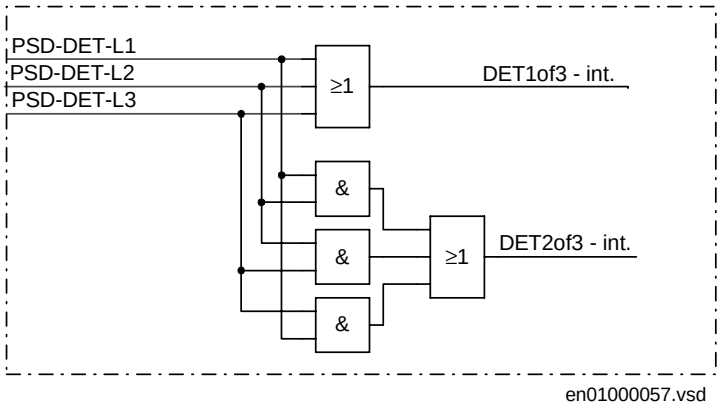

Figure 58: Detection of power-swing for 1-of-3 and 2-of-3 operating mode.

Operating and inhibit conditions

Figure 59 presents a simplified logic diagram for a PSD function. The internal signals DET1of3 and DET2of3 relate to the detailed logic diagrams in figure 57 and figure 58 respectively.

Selection of the operating mode is possible by the proper configuration of the functional input signals PSD--REL1PH, PSD--BLK1PH, PSD--REL2PH, and PSD--BLK2PH (see the signal list in the appendix to this document).

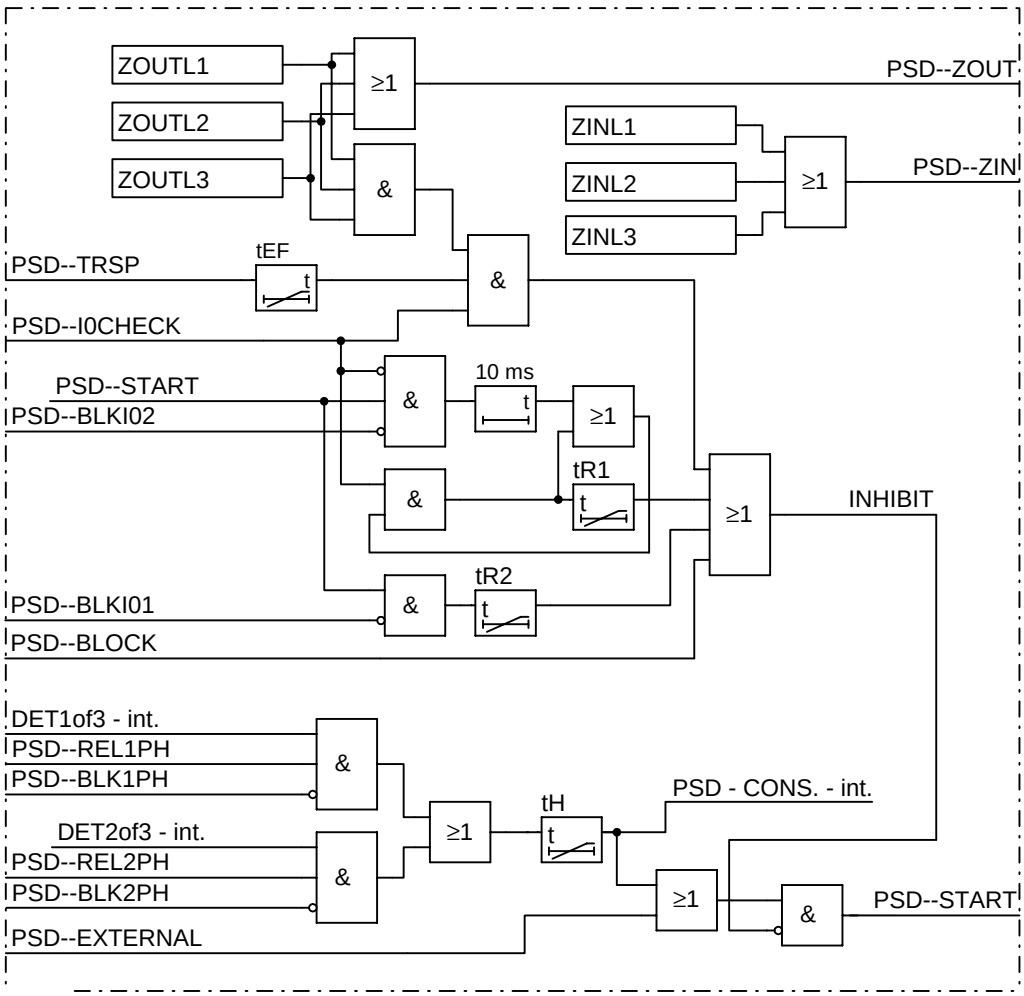

Figure 59: PSD function - simplified block diagram.

There are four different ways to form the internal INHIBIT signal:

- Logical 1 on functional input PSD--BLOCK inhibits the output PSD--START signal instantaneously.
- The INHIBIT internal signal becomes logical 1, if the power swing has been detected and the measured impedance remains within its operate characteristic for the time, which is longer than the time delay set on tR2 timer. It is possible to disable this condition by connecting the logical 1 signal to the PSD--BLKI01 functional input.
- The INHIBIT internal signal becomes logical 1 after the time delay, set on tR1 timer, if the power swing appears before the functional PSD--I0CHECK becomes logical 1. It is possible to disable this condition by connecting the logical 1 signal to the BLKI02 functional input.
- The INHIBIT logical signals becomes logical 1, if the functional input PSD--I0CHECK appears within the time delay, set on tEF timer and the impedance has been seen within the outer characteristic of the PSD operate characteristic in all three phases. This function prevents the operation of the PSD function in cases, when the circuit breaker closes on persistent single-phase fault after single-pole auto-reclosing dead time, if the initial single-phase fault and single-pole opening of the circuit breaker causes the power swing in the remaining two phases.

5.4 Calculations

5.4.1 Setting instructions

The operation and the reach of the PSD function can locally be set under the menu:

Settings
Functions
Group n
Impedance
PowerSwingDet

Setting the reach of the inner characteristic

Set the reach of the inner characteristic R1IN in the resistive direction (see figure 60) as well as X1IN in the reactive direction, so that the inner operate characteristic completely covers all distance protection zones, which are supposed to be blocked by the PSD function. It is recommended to consider at least 10% of additional safety margin.

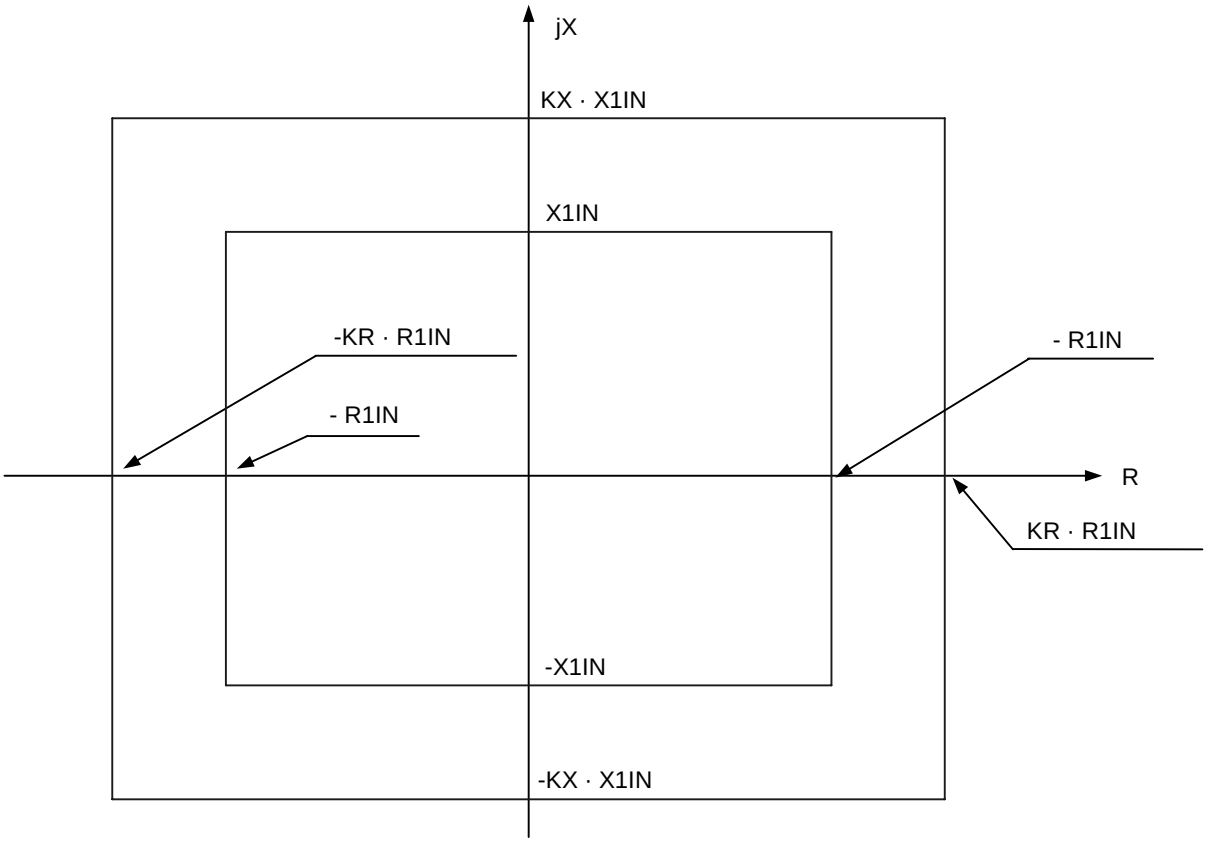

Figure 60: Operating characteristic of the PSD function

Setting the reach of the outer characteristic

Set the reach of the outer characteristic as a multiple of a reach for the inner characteristic. KR and KX are the setting parameters, expressed in percentages of the set reaches in resistive (R1IN) and reactive (X1IN) direction for the inner operate characteristic.

$$KR = 100 \cdot \frac{R1OUT}{R1IN}$$

(Equation 109)

and

$$KX = 100 \cdot \frac{X1OUT}{X1IN}$$

(Equation 110)

R1OUT and X1OUT are the calculated values of the reach for the outer characteristic. Also observe the fact, that the minimum values for KR and KX are equal to 120%.

Limitation of the resistive reach

The reach in the resistive direction should not exceed more than 80% of the minimum load resistance R_{Lmin}. This stands for both the reach of the inner as well as for the reach of the outer characteristic.

$$R1IN \leq 0.8 \cdot R_{Lmin}$$

(Equation 111)

and

$$KR \leq 80 \cdot \frac{R_{Lmin}}{R1IN}$$

(Equation 112)

Determination of the impedance difference and speed

The resistive transition area, which is equal to:

$$\Delta R = R1OUT - R1IN$$

(Equation 113)

should be set as wide as possible, considering the limitations for covering the desired distance protection zones and not entering the load impedance area. At the same time, it depends on the maximum required initial speed of the impedance, which should still be recognised as a power swing and not as a fault. The initial speed of impedance must be determined by the system studies. It is recommended to try the first iteration with the default time delay for the tP1 timer, which is 45 ms, and calculate, if the set speed of the transition impedance corresponds to the condition:

$$\frac{R1OUT - R1IN}{tP1} > \left(\frac{\Delta Z}{\Delta t}\right)_{req}$$

(Equation 114)

The expression:

$$(\Delta Z/\Delta t)_{req}$$

(Equation 115)

represents the maximum required speed of impedance, which should still be recognised as an initial power swing. Reduce the setting of the tP1 time delay only, if the upper condition can not be satisfied with the resistance settings on their specified minimum and maximum possible values.

System studies also determine the maximum possible speed of the transition impedance. Set the tP2 timer so, that the maximum detectable speed of the transition impedance satisfies the condition:

$$\frac{R1OUT - R1IN}{tP2} > \left(\frac{\Delta Z}{\Delta t}\right)_{max}$$

(Equation 116)

The expression :

$$(\Delta Z/\Delta t)_{max}$$

(Equation 117)

represents the maximum required speed of impedance, which should still be recognised as a power swing within the developed stage.

Reactive reach

The reactive transition area should generally be equal to the resistive transition area. If supposed, that the reactive reach of the inner characteristic is determined by the distance protection zone reach and equal to X1IN, then the reactive multiplication factor must be equal to:

$$KX = 100 \cdot \left[\frac{R1IN}{X1IN} \cdot \left(\frac{KR}{100} - 1\right) + 1\right]$$

(Equation 118)

Set the KX to 120%, if the calculation requires a value less than 120%.

tH hold timer

System studies should determine the settings for the hold timer tH (see “Functionality”). The purpose of this timer is, to secure continuous output signal from the PSD function during the power swing, even after the transient impedance leaves the PSD operate characteristic and is expected to return within a certain time due to continuous swinging. Consider the minimum possible speed of power swinging in a particular system.

tR1 inhibit timer

The tR1 inhibit timer delays the influence of the detected residual current on the inhibit criteria for the PSD function. It prevents operation of the function for short transients in the residual current measured by the terminal.

tR2 inhibit timer

The tR2 inhibit timer disables the output PSD--START signal from the PSD function, if the measured impedance remains within the PSD operate area for a time, longer than the set tR2 value. This time delay was usually set to approximately two seconds in older power-swing devices.

tEF timer for reclosing on persistent single-phase faults

The setting of the tEF timer must cover, with sufficient margin, the opening time of a circuit breaker and the dead-time of a single-phase auto-reclosing together with the breaker closing time.

6 Scheme communication logic for distance protection (ZCOM)

6.1 Application

To achieve fast fault clearing for a fault on the part of the line not covered by the instantaneous zone 1, the stepped distance protection function can be supported with logic, that uses communication channels.

One communication channel in each direction, which can transmit an on/off signal is required. The performance and security of this function is directly related to the transmission channel speed, and security against false or lost signals. For this reason special channels are used for this purpose. When power line carrier is used for communication, these special channels are strongly recommended due to the communication disturbance caused by the primary fault.

The logic supports the following communications schemes; blocking scheme, permissive schemes (overreach and underreach) and direct intertrip.

6.2 Functionality

6.2.1 Theory of operation

Depending on whether a reverse or forward directed impedance zone is used to issue the send signal (ZCOM-CS), the communication schemes are divided into Blocking and Permissive schemes, respectively.

Blocking communication scheme

In a blocking scheme, the received signal (ZCOM-CR) carries information about the fault position, which specifies that it is outside the protected line, on the bus or on adjacent lines. Do not prolong the sent signal, so set tSendMin to zero. The sending might be interrupted by operation of a forward zone if it is connected to ZCOM-CSNBLK.

An overreaching zone is allowed to trip after a co-ordination time (tCoord), when no signal is received from the remote terminal. The tCoord time must allow for the transmission of the blocking signal with a certain margin.

In case of external faults, the blocking signal (ZCOM-CR) must be received before the tCoord elapses, to prevent a false trip.

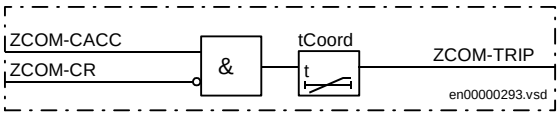

Figure 61: Basic logic for trip carrier in blocking scheme.

Table 6: Input and output signals for ZCOM

ZCOM-CACC	Forward overreaching zone used for the communication scheme.
ZCOM-CR	Carrier receive signal.
ZCOM-TRIP	Trip from the communication scheme.

Permissive communication scheme

In a permissive scheme, the received signal (ZCOM-CR) carries information from the protection terminal at the opposite end of the line. It indicates detected faults in the forward direction out on the line. The received information is used to allow an overreaching zone to trip almost instantaneously for faults on the protected line.

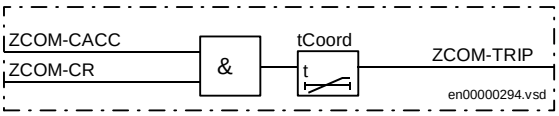

Figure 62: Logic for trip carrier in permissive scheme.

The permissive scheme principle is further subdivided into two types, underreaching and overreaching, where the names indicate that the send signal (ZCOM-CS) is issued by an underreaching or an overreaching zone, respectively.

The signal (ZCOM-CR) must be received when the overreaching zone is still activated to achieve an instantaneous trip. In some cases, due to the fault current distribution, the overreaching zone can operate only after the fault has been cleared at the terminal nearest to the fault. There is a certain risk that in case of a trip from an independent tripping zone, the zone issuing the carrier send signal (ZCOM-CS) resets before the overreaching zone has operated at the remote terminal. To assure a sufficient duration of the received signal (ZCOM-CR), the send signal (ZCOM-CS), can be prolonged by a

tSendMin reset timer. The recommended setting of tSendMin is 100 ms. A ZCOM-CS signal from an underreaching zone can be prolonged during all circumstances without drawbacks, but a ZCOM-CS signal from an overreaching zone must never be prolonged in case of paralllel lines, to secure correct operation of current reversal logic, when applied.

At the permissive overreaching scheme, the carrier send signal (ZCOM-CS) might be issued in parallel both from an overreaching zone and an underreaching, independent tripping zone. The ZCOM-CS signal from the overreaching zone must not be prolonged while the ZCOM-CS signal from zone 1 can be prolonged.

There is no race between the ZCOM-CR signal and the operation of the zone in a permissive scheme. So set the tCoord to zero. A permissive scheme is inherently faster and has better security against false tripping than a blocking scheme. On the other hand, a permissive scheme depends on a received ZCOM-CR signal for a fast trip, so its dependability is lower than that of a blocking scheme.

To overcome this lower dependability in permissive schemes, an *Unblocking* function can be used. Use this function at power-line carrier (PLC) communication, where the signal has to be sent through the primary fault. The unblocking function uses a carrier guard signal (ZCOM-CRG), which must always be present, even when no ZCOM-CR signal is received. The absence of the ZCOM-CRG signal during the security time is used as a CR signal. See figure 63. This also enables a permissive scheme to operate when the line fault blocks the signal transmission. Set the tSecurity at 35 ms.

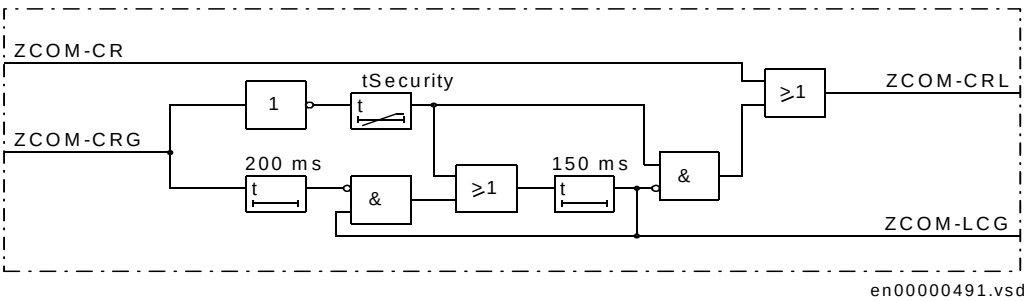

Figure 63: Carrier guard logic with unblock logic.

The ZCOM-CR signals are always transferred directly to ZCOM-CRL without any delay.

Table 7: Input and output signals for carrier guard

ZCOM-CR	Received signal from the communication equipment
ZCOM-CRG	Carrier guard signal from the communication equipment.
ZCOM-CRL	Signal to the communication scheme.
ZCOM-LCG	Alarm signal line-check guard

Direct inter-trip scheme

In the direct inter-trip scheme, the carrier send signal (ZCOM-CS) is sent from an underreaching zone that is tripping the line.

The received signal (ZCOM-CR) is directly transferred to a ZCOM-TRIP for tripping without local criteria. The signal is further processed in the tripping logic. In case of single-pole tripping, a phase selection is performed.

6.3 Calculations

6.3.1 Settings

The scheme type and the timers are set under:

Settings
Functions
Group n (n=1-4)
Impedance
ZCommunication
SchemeType

Configure the zones used for the ZCOM-CS carrier send and for scheme communication tripping under:

Configuration
Functions
Impedance
ZCom

7 Current reversal and WEI logic for distance protection (ZCAL)

7.1 Application

To achieve fast fault clearing for a fault on the part of the line not covered by the instantaneous zone 1, the stepped distance protection function can be supported with logic, that uses communication channels. REx 5xx line distance protection terminals have for this reason available a scheme communication logic (ZCOM - see the document “Scheme communication logic for distance protection”) and a phase segregated scheme communication logic (ZC1P - see the document “Phase segregated communication logic for distance protection”).

Different system conditions, in many cases, require additional special logic circuits, like current reversal logic and WEI, weak end infeed logic. Both functions are available within the additional communication logic for the distance protection function (ZCAL).

The contents of the additional communication logic is always adjusted to the needs of each communication logic, ZCOM or ZC1P respectively, whichever included in REx 5xx terminal.

Current reversal logic

If parallel lines are connected to common buses at both terminals, overreaching permissive communication schemes can trip unselectively due to current reversal. This unwanted tripping affects the healthy line when a fault is cleared on the other line. This lack of security results in a total loss of inter-connection between the two buses.

To avoid this kind of disturbance, a fault current reversal logic (transient blocking logic) can be used.

Weak end infeed (WEI) logic

Permissive communication schemes can basically operate only when the protection in the remote terminal can detect the fault. The detection requires a sufficient minimum fault current, normally >20% of I_r . The fault current can be too low due to an open breaker or low short-circuit power of the source. To overcome these conditions, weak end infeed echo logic is used.

The fault current can also be initially too low due to the fault current distribution. Here, the fault current increases when the breaker opens in the strong terminal, and a sequential tripping is achieved. This requires a detection of the fault by an independent-tripping zone 1. To avoid sequential tripping as described, and when zone 1 is not available, weak end infeed tripping logic is used.

7.2 Functionality

Current reversal logic

Figure 64 and figure 65 show a typical system condition, which can result in a fault current reversal. Note that the fault current is reversed in line L2 after the breaker opening.

In terminal A:2, where the forward zone was initially activated, this zone must reset before the carrier signal ZCOM-CRLn, initiated from B:2, arrives. The carrier send ZCOM-CS or ZC1P-CSLn from B:2 is therefore held back until the reverse zone ZCAL-IRVLn has reset and the tDelay time has elapsed; see figure in Design, Current reversal logic .

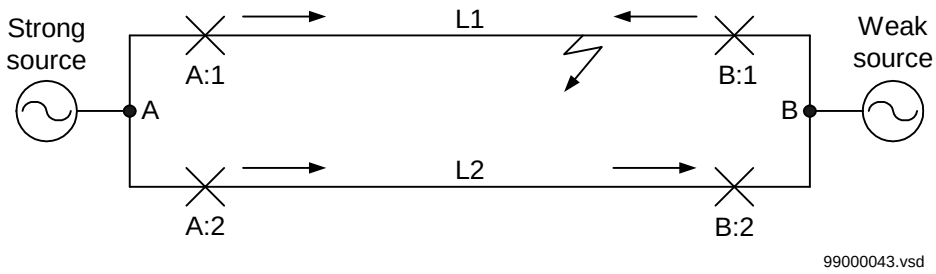

Figure 64: Initial system condition.

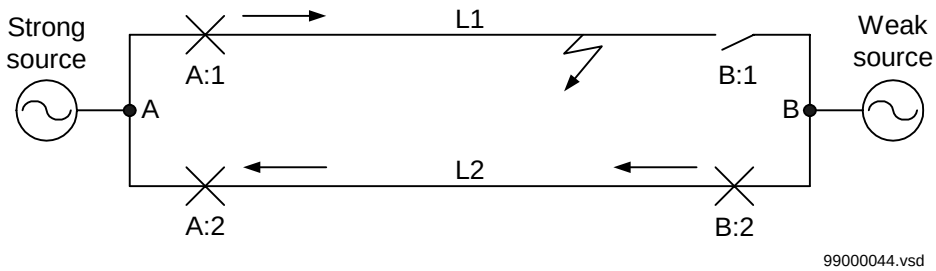

Figure 65: Current distribution after the breaker B:1 is opened.

Weak end infeed logic

The WEI function sends back (echoes) the received carrier signal under the condition that no fault has been detected on the weak end by different fault detection elements (distance protection in forward and reverse direction).

The weak end infeed logic function can be extended to trip also the breaker in the weak terminal. The trip is achieved when one or more phase voltages are low during an echo function. In case of single-pole tripping, the phase voltages are used as phase selectors.

Weak end infeed logic is generally used in permissive schemes only. It is also possible to use it together with the blocking teleprotection scheme. Some limitations apply in this case:

- Only the trip part of the function can be used together with the blocking scheme. It is not possible to use the echo function to send the echo carrier signal to the remote line terminal. The echo signal would block the operation of the distance protection at the remote line end and in this way prevent the correct operation of a complete protection scheme.
- It is not possible to use the carrier receive signal from the remote end to start the WEI function. Start the operation of the WEI function by connecting the TUV--START output signal of the time delayed undervoltage function to the ZCAL-CRL functional input. In this way, the operation of the undervoltage protection will start the WEI logic.
- Configure the carrier receive signal from the remote end to the ZCAL-WEIBLK functional input together with an OR combination of all fault detection signals, used within the terminal to detect the fault in forward or reverse direction. Do not use the undervoltage protection signals for this purpose.

7.3 Design

Current reversal logic

The current reversal logic (IREV) uses a reverse zone (connected to the ZCAL-IRVLn input signal), which in terminal B:2 recognises the fault on the L1 line (see figure in Functionality, Current reversal logic. When the reverse zone is activated during the tPickUp time (see figure 66), the logic is ready to issue a ZCAL-IRVLLn output signal. This signal prevents sending of a ZCOM-CS (or ZC1P-CSLn) signal and activation of the ZCOM-TRIP (or ZC1P-TRLn) signal for a time as set on a tDelay timer, when connected to the ZCOM-BLOCK (or ZC1P-BLOCK) functional input of the ZCOM (or ZC1P) function.

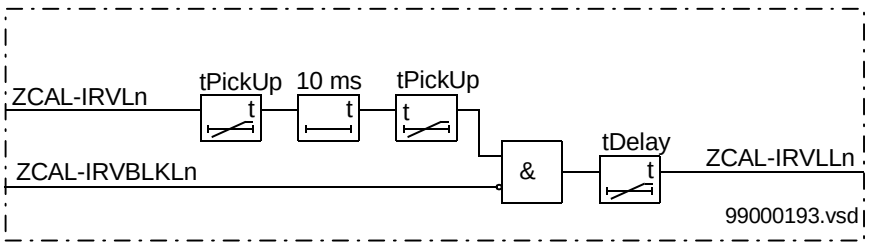

Figure 66: Current reversal logic.

The tDelay timer makes it possible for the carrier receive signal, connected to the ZCOM-CR (or ZC1P-CRLn) functional input, to reset before the ZCOM-TRIP (or the ZC1P-TRLn) signal is activated due to the current reversal by the forward directed zone, connected to the ZCOM-CACC (or the ZC1P-CACCLn) functional input.

Weak end infeed logic

The WEI function returns the received carrier signal (see figure 67), when:

- The functional input ZCAL-CRLLn is active. This input is usually connected to the ZCOM-CRL or to the ZC1P-CRLLn functional output.
- The WEI function is not blocked by the active signal connected to the ZCAL-BLOCK functional input or to the ZCAL-VTSZ functional input. The latest is usually configured to the FUSE-VTSZ functional output of the fuse-failure function.
- No active signal has been present for at least 200 ms on the ZCAL-WEIBLKLn functional input. An OR combination of all fault detection functions (not undervoltage) as present within the terminal is usually used for this purpose.

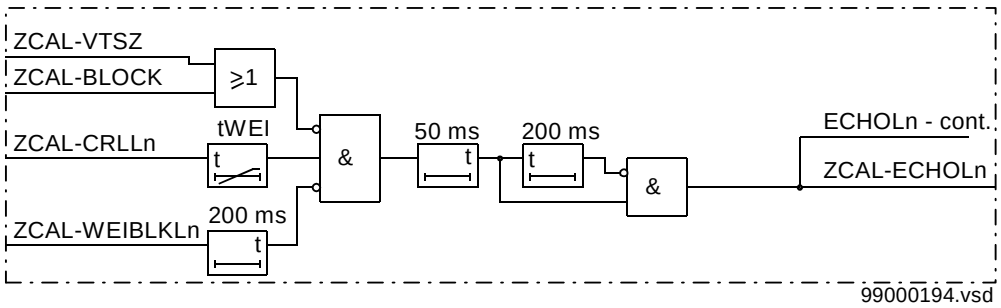

Figure 67: Echo of a received carrier signal by the WEI function.

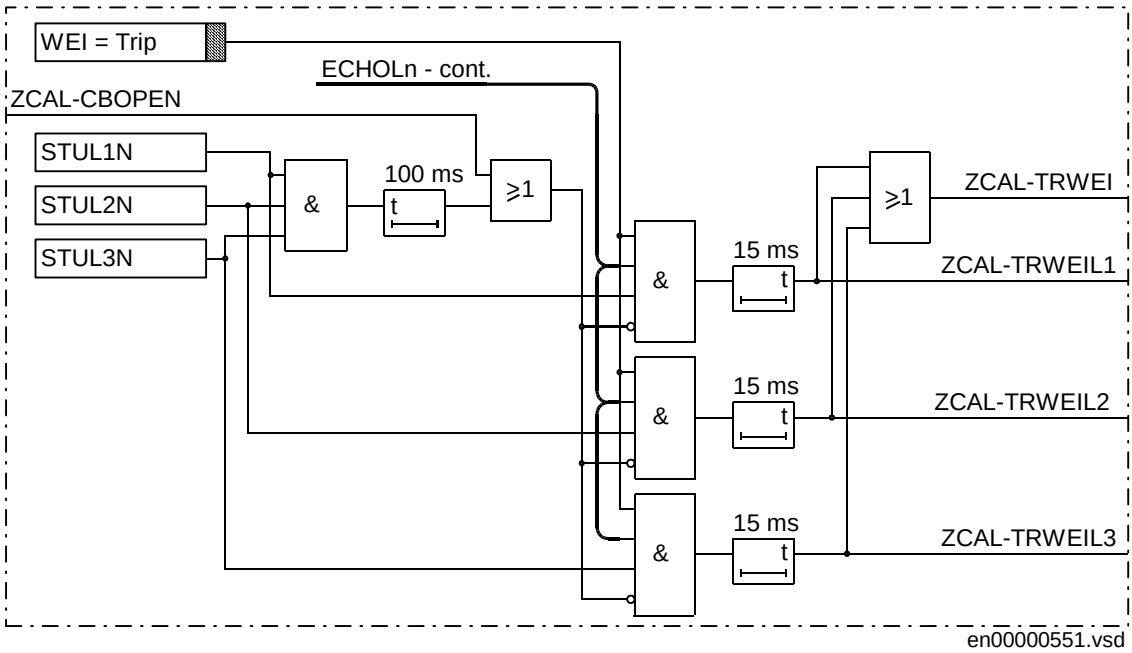

Figure 68: Tripping part of the WEI logic - simplified logic diagram.

When an echo function is used in both terminals, a spurious signal can be looped round by the echo logics. To avoid a continuous lock-up of the system, the duration of the echoed signal is limited to 200 ms.

An undervoltage criteria is used as an additional tripping criteria, when the tripping of the local breaker is selected together with the WEI function and ECHO signal has been issued by the echo logic, see figure 68.

7.4 Calculations

7.4.1 Setting

The current reversal logic and the WEI function are set in the menu under:

Setting
Functions
Group n (n=1-4)
Impedance
ComIRevWei

Current reversal logic

Set the tDelay time in relation to the reset time in the communication equipment for the ZCOM-CR (ZC1P-CRLn) signal. Set the tDelay at the maximum carrier reset time plus 30 ms. A minimum tDelay setting of 40 ms is recommended. A long tDelay setting increases security against unwanted tripping, but delay the fault clearing in case of a fault developing from one line to involve the other one. The probability of this type of fault is small. So set the tDelay with a good margin.

Set the pick-up delay tPickUp to <80% of the breaker operate time, but with a minimum of 20 ms.

Weak end infeed logic

Set WEI = Echo to activate the weak end infeed function. Set WEI = Trip to obtain echo with trip.

Set the voltage criterion for the weak end trip to 90% of the minimum operation voltage and consider also the emergency conditions.

Chapter 5 Current

About this chapter

This chapter describes the current protection functions.

1 Instantaneous overcurrent protection (IOC)

1.1 Application

The conventional distance protection can manage the fault clearance of earth-faults in most of the cases. In some applications, especially applications with long lines, the clearance can be improved by use of an instantaneous earth-fault protection. Those are for instance:

- In the case of high infeed of fault current from the opposite end of the line, this might increase the fault resistance seen by the distance relay to such a value that the instantaneous step of the distance protection will not operate.
- In applications with series compensated lines, where the capacitor is located at the end of the line and very strong infeed of fault current from that end, will result in a difficult problem for the distance protection to perform a selective fault clearance. This due to the voltage reversal that might occur.

The use of instantaneous overcurrent earth-fault protection is most suitable for long lines in meshed transmission systems. It can also be used for radial lines with low fault current infeed from the opposite end of the line.

The instantaneous residual overcurrent function is very suitable as back-up protection for phase to earth faults close to the terminal. This enables a short back-up faults clearance time for the phase to earth faults with high fault current.

The instantaneous, non-directional, earth-fault overcurrent protection (IOC), which can operate in 15 ms (50 Hz nominal system frequency) for faults characterized by very high currents, is included in some of the REx 5xx terminals. Refer to the ordering information for more details.

1.2 Functionality

The measuring technic is based on measuring of the incoming residual current to the terminal.

The current-measuring elements within one of the built-in digital signal processors continuously measure the zero sequence current, and compare it with the IN>> set value. A recursive Fourier filter filters the current signals, and a separate trip counter prevents high overreaching of the measuring elements. The logical value of the signal on the output of the digital signal processor (IOC--STIN) is equal to 1 if the measured zero sequence current exceeds the pre-set value.

1.3 Design

The simplified logic diagram of the instantaneous phase overcurrent function is shown in figure 69.

The overcurrent function is disabled if:

- The terminal is in TEST status (TEST-ACTIVE is high) and the function has been blocked from the HMI (BlockIOC=Yes)
- The input signal IOC--BLOCK is high.

The IOC--BLOCK signal is a blocking signal of the overcurrent function. It can be connected to a binary input in order to receive a block command from external devices or it can be configured (software connection) to other internal functions within the terminal itself, in order to receive a block command from internal functions. Through OR gates it can be connected to both binary inputs and internal function outputs.

When the overcurrent function is enabled, the output tripping signals IOC--TRN and IOC--TRIP can operate. The duration of each output signal is at least 15 ms. This enables continuous output signals for currents, which go just beyond the set operating value.

The IOC--TRN signal is related to the residual overcurrent trip.

The IOC--TRIP output signal behaves as general instantaneous overcurrent trip when in the REx 5xx terminal also the instantaneous phase overcurrent function is implemented. I.e. this signal will be activated in case of residual overcurrent detection or in case of any single-phase overcurrent detection (IOC--STIL_: IOC--STIL1 or IOC--STIL2 or IOC--STIL3). If only the residual overcurrent function is implemented in the terminal, then this signal behaves exactly as the signal IOC--TRN and can be used for signalising.

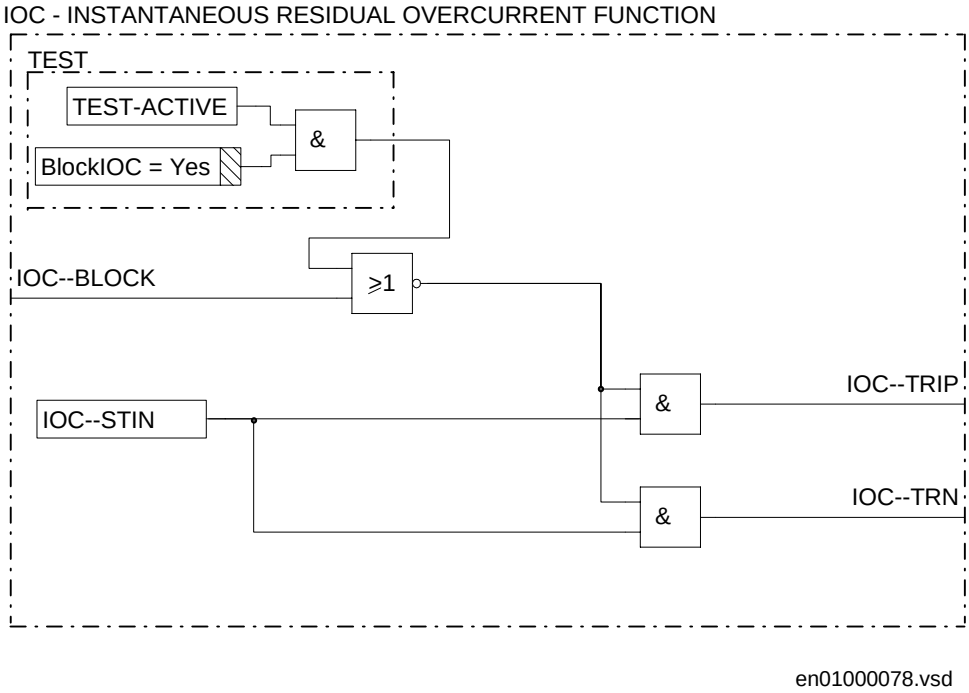

Figure 69: Simplified logic diagram of instantaneous residual overcurrent protection.

1.4 Calculations

1.4.1 Setting instructions

The residual overcurrent protection is very sensitive to the change of zero source impedance. Since it must operate only in a selective way, it is necessary to check all system and transient conditions that can cause unwanted operation.

Only detailed network studies can determine the operating conditions under which the highest possible fault current is expected on the line. In most cases, this current appears during single-phase fault conditions. But also examine two-phase-to-earth conditions, since this type of fault can be higher than single-phase to earth fault in some cases.

Also study transients that can cause a high increase of the line current for short times. A typical example is a transmission line with a power transformer at the remote end, which can cause high inrush current when connected to the network and can thus also cause the operation of the built-in, instantaneous, earth-fault protection.

Meshed network without parallel line

The following fault calculations have to be done for single-phase-to-earth and two-phase-to-earth faults. With reference to figure 70, apply a fault in B and then calculate the relay through fault residual current I_{fB}. The calculation should be done using the minimum source impedance values for Z_A and the maximum source impedance values for Z_B in order to get the maximum through fault current from A to B. The zero sequence source impedances are of great importance.

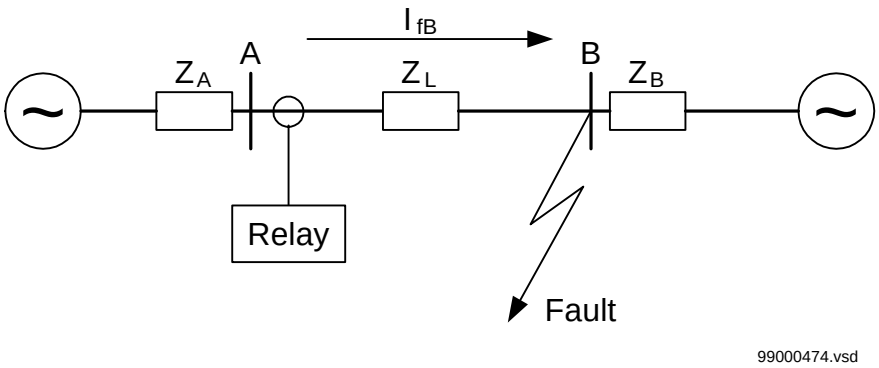

Figure 70: Through fault current from A to B: I_{fB}

Then a fault in A has to be applied and the through fault residual current I_{fA} has to be calculated (Figure 71). In order to get the maximum through fault current, the minimum value for Z_B and the maximum value for Z_A have to be considered.

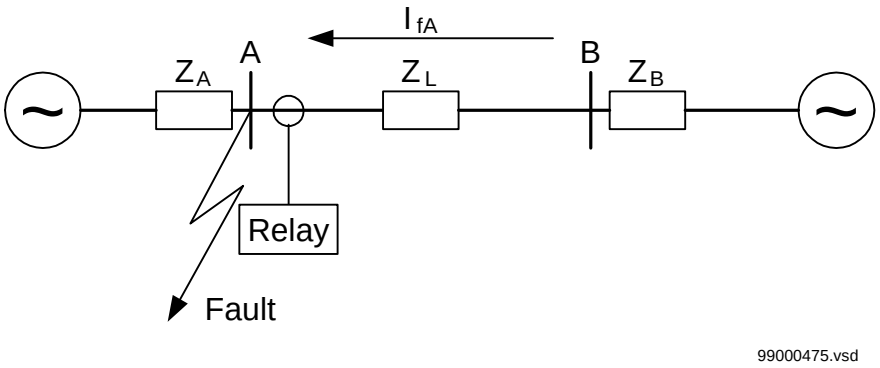

Figure 71: Through fault current from B to A: I_{fA}

The relay must not trip for any of the two trough fault currents. Hence the minimum theoretical current setting (*Imin*) will be:

$$Imin \geq MAX(I_{fA}, I_{fA})$$

(Equation 119)

A safety margin of 5% for the maximum protection static inaccuracy and a safety margin of 5% for the maximum possible transient overreach have to be introduced. An additional 20% is suggested due to the inaccuracy of the instrument transformers under transient conditions and inaccuracy in the system data.

The minimum setting (Is) for the instantaneous residual overcurrent protection is then:

$$Is \geq 1,3 \cdot Imin$$

(Equation 120)

The protection function can be used for the specific application only if this setting value is equal or less than the maximum fault current that the relay has to clear (I_F in Figure 72).

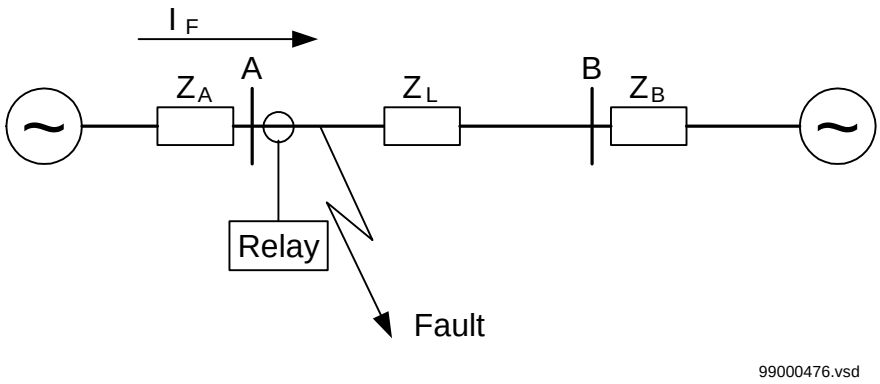

Figure 72: Fault current: I_F

The current transformer secondary setting current (Is_{SEC}) is:

$$Is_{SEC} = \frac{I_{SEC}}{I_{PRIM}} \cdot Is$$

(Equation 121)

Set this value under the setting menu:

Settings
Functions
Group*n*
InstantOC

Note: *n*=1,2,3 or 4, depending on which group to set.

Meshed network with parallel line

In case of parallel lines, the influence of the induced current from the parallel line to the protected line has to be considered. One example is given in figure 73, where the two lines are connected to the same busbar. In this case the influence of the induced residual fault current from the faulty line (line 1) to the healthy line (line 2) is considered together with the two through fault currents I_{fA} and I_{fB} mentioned previously. The maximal influence from the parallel line for the relay in Figure 73 will be with a fault at the C point with the C breaker open.

A fault in C has to be applied, and then the maximum current seen from the relay (I_M) on the healthy line (this applies for single-phase-to-earth and two-phase-to-earth faults) is calculated.

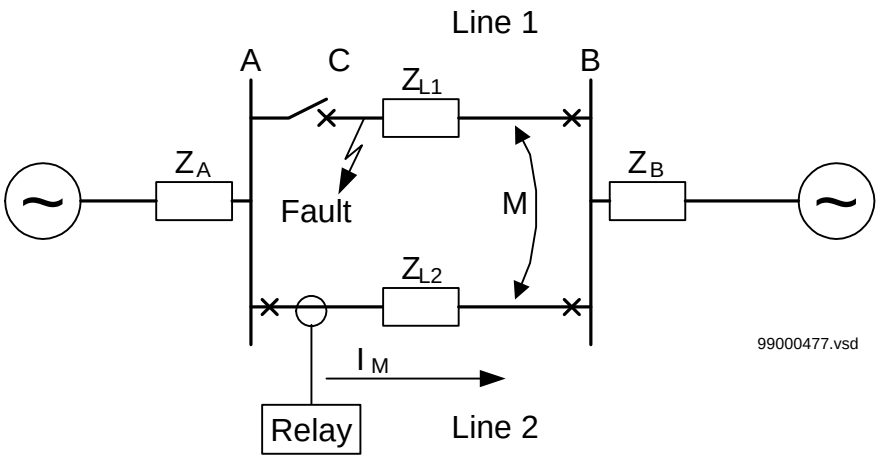

Figure 73: Two parallel lines. Influence from parallel line to the through fault current: I_M.

The minimum theoretical current setting for the residual overcurrent protection function (*Imin*) will be:

$$Imin \geq MAX(I_{fA}, I_{fB}, I_M)$$

(Equation 122)

Where I_{fA} and I_{fB} have been described in the previous paragraph. Considering the safety margins mentioned previously, the minimum setting (Is) for the instantaneous phase overcurrent protection is then:

$$Is \geq 1,3 \cdot Imin$$

(Equation 123)

The protection function can be used for the specific application only if this setting value is equal or less than the maximum residual fault current that the relay has to clear.

The current transformer secondary setting current (Is_{SEC}) is:

$$Is_{SEC} = \frac{I_{SEC}}{I_{PRIM}} \cdot Is$$

(Equation 124)

Set this value under the setting menu:

Settings
Functions
Group*n*
InstantOC

Note: *n*=1,2,3 or 4, depending on which group to set.

2 Time delayed overcurrent protection (TOC)

2.1 Application

The time delayed residual overcurrent protection (TOC) which is an earth-fault protection, serves as a built-in local back-up function to the main protection function. In most cases, it is used as a back-up for the earth-fault measuring in distance protection.

The function is intended to be used in solidly earthed systems.

The time delay makes it possible to set the relay to detect high resistance faults and still perform selective trip.

The protection, which is non-directional, is included in some of the REx 5xx terminals. Refer to the ordering information for more details.

2.2 Functionality

The current-measuring element within one of the built-in digital signal processors continuously measures the residual current (3I0), and compares it with the IN> set value. A recursive Fourier filter filters the current signal, and a separate trip counter prevents high overreaching of the measuring element. The logical value of the signal on the output of the digital signal processor (TOC--STIN) is equal to 1 if the measured residual current exceeds the pre-set value. This signal will instantaneously set the output start signal (TOC--STN), unless the function is blocked (see “Design”).

The function trip signal (TOC--TRN) can be delayed 0-60 s.

If the residual current exceeds the set value for a period longer than the set value, then a three phase trip is generated from the output signal TOC--TRN.

2.3 Design

The simplified logic diagram of the time delayed earth-fault protection is shown in figure 74.

The time delayed residual function is disabled if:

- The terminal is in TEST status (TEST-ACTIVE is high) and the function has been blocked from the HMI (BlockTOC=Yes).
- The input signal TOC--BLOCK is high.

The TOC--BLOCK signal is a blocking signal of the earth-fault function. It blocks the whole function and prevents the activation of any trip or starting output signals.

It can be connected to a binary input in order to receive a block command from external devices or it can be configured (software connection) to other internal functions within the terminal itself, in order to receive a block command from internal functions. Through OR gates it can be connected to both binary inputs and internal function outputs.

When the residual overcurrent protection is enabled, there is still a possibility to block the trip output only, without affecting the start signals, which always will be active. The input which provides this function is TOC--BLKTR.

The duration of each output signal is at least 15 ms. This enables continuous output signals for currents, which go just a little beyond the set operating value.

The TOC--TRN signal is related to the residual overcurrent trip.

The TOC--TRIP output signal behaves as general time delayed overcurrent trip when in the REx 5xx terminal also the time delayed phase overcurrent function is implemented. I.e. this signal will be activated in case of delayed residual overcurrent trip or in case of time delayed phase overcurrent trip. If only the residual overcurrent function is implemented in the terminal, then this signal behaves exactly as the signal TOC--TRN and can be used for signalization.

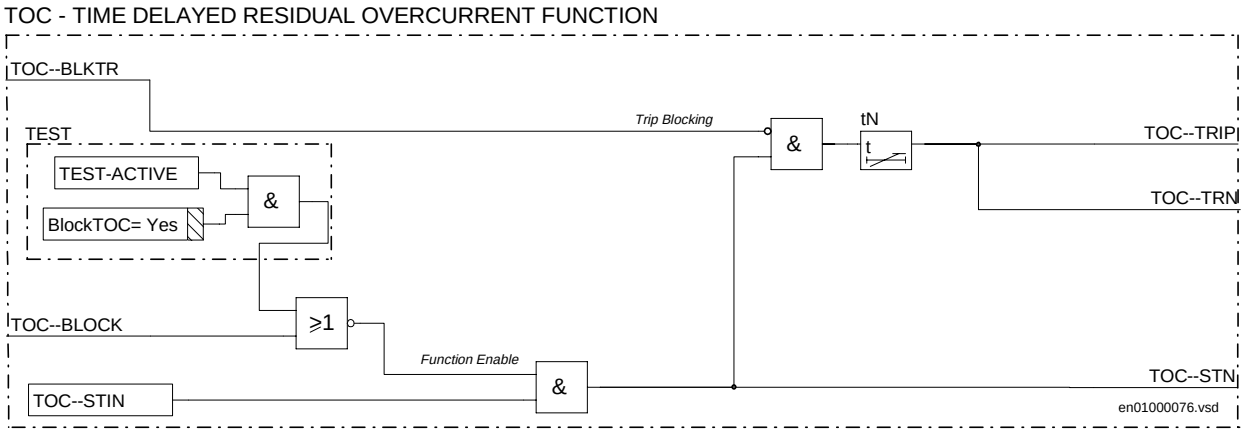

Figure 74: Simplified logic diagram of the TOC-- protection function.

2.4 Calculations

2.4.1 Setting instructions

The residual overcurrent protection is very sensitive to the change of zero source impedance. Since it must operate only in a selective way, it is necessary to check all system and transient conditions that can cause unwanted operation.

The settings should be chosen in such a way that it can detect high resistance faults on the protected line and still be selective to other residual time delayed protections in both forward and reverse directions. The time setting value should also consider transients that can cause a high increase of the residual line current for short times.

A typical example is a transmission line with a power transformer at the remote end, which can cause high inrush current when being energised.

In well transposed system, the false earth-fault current is normally lower than 5% of the line current. For non transposed lines a considerably higher false residual current may be found.

In case of extremely short or not fully transposed parallel lines, the false residual current must be measured or calculated when maximum sensitivity is desired. Generally, 80 A is recommended as a minimum primary operation value for the residual overcurrent protection.

General criteria for the primary current setting value of the time delayed residual overcurrent protection is given in the formula below:

$$1.3 \cdot IRmax < Is < 0.7 \cdot IFmin$$

(Equation 125)

Where:

IRmax	is the maximum permissive residual current flowing in the protection unit during normal service conditions and
IFmin	is the minimum residual fault current that the relay has to clear.
1.3	and
0.7	are safety factor values.

Setting of operating current IN>

If Is is the primary setting operating value of the function, then the secondary setting current (Is_{SEC}) is:

$$Is_{SEC} = \frac{I_{SEC}}{I_{PRIM}} \cdot Is$$

(Equation 126)

where I_{SEC} is the secondary rated current of the main CT and I_{PRIM} is the primary rated current of the main CT.

The relay setting value IN> is given in percentage of the secondary base current value, I4b, associated to the current transformer on input I4. The value for IN> is given from the formula:

$$IN> = \frac{Is_{SEC}}{I4b} \cdot 100$$

(Equation 127)

and this is the value that has to be set in the relay.

Set the value under the setting menu:

Settings
Functions
Group n (n=1-4)
TimeDelayOC

For the parameter IN>.

Setting of time delay tN

Set the time delay of the function, tN, under the setting menu:

Settings
Functions
Group n (n=1-4)
TimeDelayOC

3 Two step time delayed phase overcurrent protection (TOC2)

3.1 Application

The time delayed phase overcurrent function is to be used as short-circuit protection in three phase networks operating at 50 or 60 Hz. It is intended to be used either as primary protection or back-up protection for differential functions or impedance measuring functions.

In radial networks it is often sufficient to use phase overcurrent relays as short circuit protection for lines, transformers and other equipment. The current time characteristic should be chosen according to common practice in the network. It is strongly recommended to use the same current time characteristic for all overcurrent relays in the network. This includes overcurrent protection for transformers and other equipment.

There is a possibility to use phase overcurrent protection in meshed systems as short circuit protection. It must however be realized that the setting of a phase overcurrent protection system in meshed networks, can be very complicated and a large number of fault current calculations are needed. There are situations where there is no possibility to have selectivity with a protection system based on overcurrent relays in a meshed system.

The measuring function contains one current measuring element for each phase, each of them with a low set and a high set measuring step. The low set step can have either definite time or inverse time characteristic. The characteristics available are extremely inverse, very inverse, normal inverse or RI inverse. The high set step has definite time delay.

The settings are common for all phases but both the low and high set step can be set On/Off individually and also have individual inputs for blocking.

3.2 Functionality

The time delayed overcurrent protection is used as short-circuit protection in power systems, either as the primary protection or as a back-up function for selective differential protection or impedance measuring protection.The protection function comprises of measuring circuits for the three phase currents, each with a low and high current setting. The low current setting has definite or inverse time-delay while the high current setting has only definite time-delay. The measuring circuits share common settings for all phases, however, both the low and high current settings can be blocked or enabled independent of the other setting.

Figure 75 shows a simplified logic diagram for the two step phase overcurrent protection.

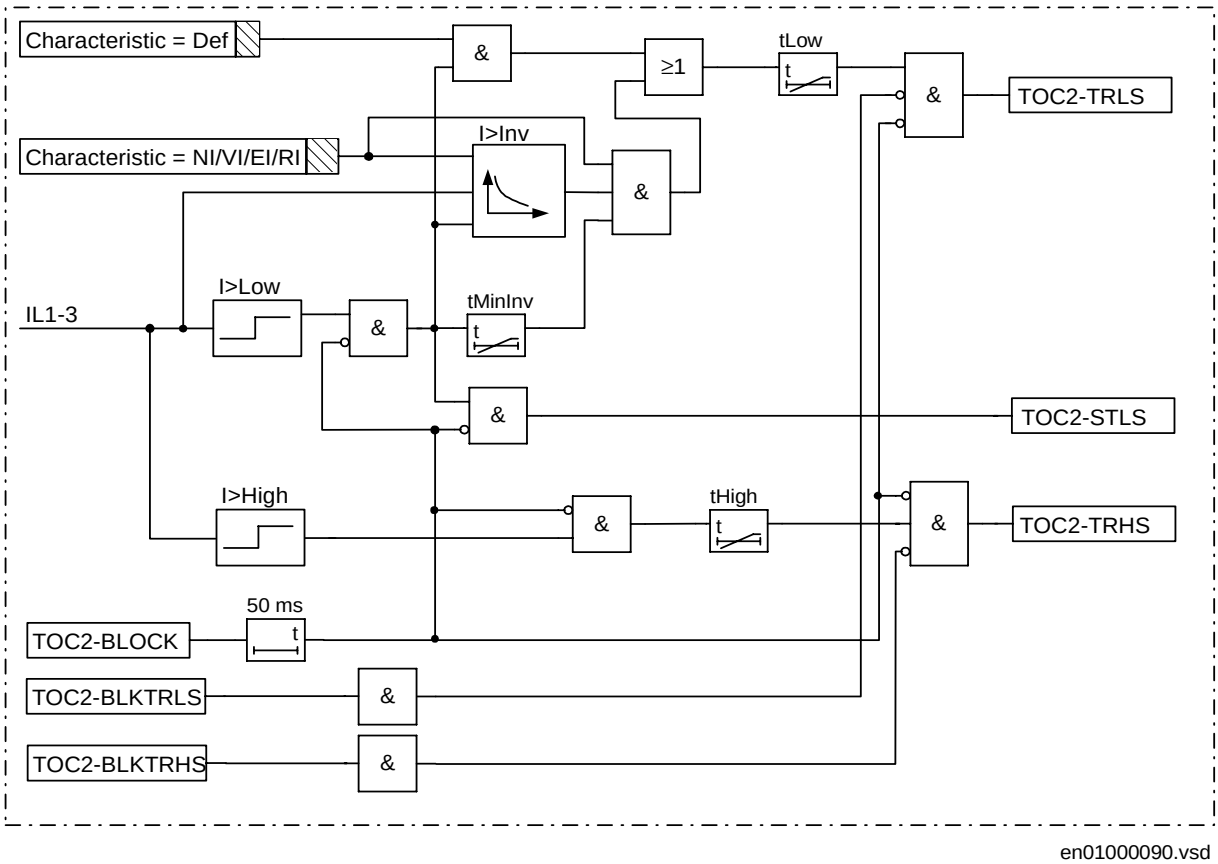

Figure 75: Two step time delayed phase overcurrent protection, simplified logic diagram

3.3 Calculations

3.3.1 Setting instructions

The phase overcurrent protection can be used in different applications. In most applications it is required that all short circuits within a protected zone shall be detected and cleared and the fault clearance shall be selective. As the protection can be used in several applications only some examples are discussed.

Line protection in radial network

The phase overcurrent protection is suitable to use in radial systems without any fault current infeed from the radial feeders.

The pick up current setting (inverse time relays) or the lowest current step (constant time relays) must be given a current setting so that the highest possible load current does not cause relay operation. Here consideration also has to be taken to the relay reset current, so that a short peak of overcurrent does not cause operation of the relay even when the overcurrent has ceased.

The lowest setting value can be written:

$$I_{pu} \geq 1.2 \cdot \frac{I_{max}}{k}$$

(Equation 128)

Where:

1.2 is a safety factor due to load estimation uncertainty etc.,

k the resetting ratio of the relay (about 0.95) and

I_{max} the maximum load current.

The maximum load current on the line has to be estimated. From operation statistics the load current up to the present situation can be found. Also emergency situations must be considered. The current setting must be valid also for some years ahead.

There is also a demand that all faults, within the zone that the protection shall cover, must be detected by the phase overcurrent relay. The minimum fault current Iscmin, to be detected by the relay, must be calculated. Taking this value as a base, the highest pick up current setting can be written:

$$I_{pu} \leq 0.7 \cdot I_{scmin}$$

(Equation 129)

Where:

0.7 is a safety factor, due to calculation uncertainty and

I_{scmin} the smallest fault current to be detected by the overcurrent protection.

As a summary the pick up current shall be chosen within the interval:

$$1.2 \cdot \frac{I_{max}}{k} \leq I_{pu} \leq 0.7 \cdot I_{scmin}$$

(Equation 130)

The high current function of the overcurrent relay, which only has a short or no delay of the operation, must be given a current setting so that the relay is selective to other relays in the power system. It is desirable to have a rapid tripping of faults within as large portion as possible of the part of the power system to be protected by the relay (primary protected zone). A fault current calculation gives the largest current of faults, Iscmax, at the most remote part of the primary protected zone. Considerations have to be made to the risk of transient overreach, due to a possible DC component of the short circuit current. The lowest current setting of the most rapid stage, of the phase overcurrent relay, can be written:

$$I_{high} \geq 1.2 \cdot k_t \cdot I_{scmax}$$

(Equation 131)

Where:

1.2 is a safety factor, due to calculation uncertainty

k_t is a factor that takes care of the transient overreach due to the DC component of the fault current. kt is less than 1.05 if the power system time constant is less than 100 ms.

I_{scmax} is the largest fault current at a fault at the most remote point of the primary protection zone.

The operate times of the phase-overcurrent protection have to be chosen so that the fault time is so short that equipment will not be damaged due to thermal overload, at the same time selectivity is assured. For overcurrent protection, in a radial fed network, the time setting can be chosen in a graphical way. This is mostly used in the case of inverse time overcurrent protections.

Line protection in meshed network

The current setting can be made in the same way as for radial networks.

If inverse time characteristics are used with equal current and time setting for all phase current protections in the system the selectivity is assured as long as there are more than two bays carrying fault current to each substation. Sometimes this is however impossible due to the fault current distribution between the different lines.

If definite time characteristic is used the co-ordination between the different phase overcurrent line protections is done by means of current setting.

As the phase overcurrent protection often is used as a back-up protection of lines, where a distance protection is the main protection, relatively long operation times are acceptable for the phase overcurrent protection.

Setting characteristics

Following formulas are valid for the inverse time characteristic:

Table 8: Formulas for the inverse time characteristic

Characteristic:	Time delay(s):
Normal inverse	$t = \frac{0,14}{I^{0,02} - 1} \cdot k$ (Equation 132)
Very inverse	$t = \frac{13,5}{I - 1} \cdot k$ (Equation 133)
Extremely inverse	$t = \frac{80}{I^2 - 1} \cdot k$ (Equation 134)
RI inverse	$t = \frac{1}{0,339 - \langle (0,236) / I \rangle} \cdot k$ (Equation 135)

Where:

I	denotes (measured current)/ I>Inv and
k	is a time multiplier with setting range 0,05 - 1,10.

The decisive factors for the setting of inverse time characteristic are the allowable time for disconnection of fault at minimum fault current that the function shall operate for together with selectivity at maximum fault current.

The settings are given in Setting table. Setting of parameters are found in the menu under:

Settings
Functions
Group n (n=1-4)
InvTDelay

4 Two step time delayed directional phase overcurrent protection (TOC3)

4.1 Application

The time delayed phase overcurrent function is to be used as short-circuit protection in three phase networks operating at 50 or 60 Hz. It is intended to be used either as primary protection or back-up protection for differential functions or impedance measuring functions.

In radial networks it is often sufficient to use phase overcurrent relays as short circuit protection for lines, transformers and other equipment. The current time characteristic should be chosen according to common practice in the network. It is strongly recommended to use the same current time characteristic for all overcurrent relays in the network. This includes overcurrent protection for transformers and other equipment.

There is a possibility to use phase overcurrent protection in meshed systems, as short circuit protection. It must however be realized that the setting of a phase overcurrent protection system in meshed networks, can be very complicated and a large number of fault current calculations are needed. There are situations where there is no possibility to have selectivity with a protection system based on overcurrent relays in a meshed system.

In some applications the possibility of obtaining selectivity can be improved significantly if a directional phase overcurrent function is used. This can be the case in meshed networks and in radial networks with generation connected remote in the system, thus giving fault current infeed in “reverse” direction.

The measuring function contains one current measuring element for each phase, each of them with a low set and a high set measuring step. The low set step can have either definite time or inverse time characteristic. The characteristics available are extremely inverse, very inverse, normal inverse or RI inverse. The high set step has definite time delay.

The settings are common for all phases but both the low and high set step can be set On/Off individually and also got individual inputs for blocking.

4.2 Functionality

4.2.1 Theory of operation and design

Current measuring element

The current measuring element continuously measures the current in all phases and compares it to the set operating values for the two steps. If the current is above set value the corresponding output signal will be set. If the current is above both the setting I>Low and I>Inv the inverse time evaluation according to choosen characteristic starts and the INV signal sets after corresponding time. A filter ensures immunity to disturbances and DC-components and minimizes the transient overreach. A simplified block diagram is found in figure 76. The function is true phase segregated. This means that there are identical measuring elements in each phase.

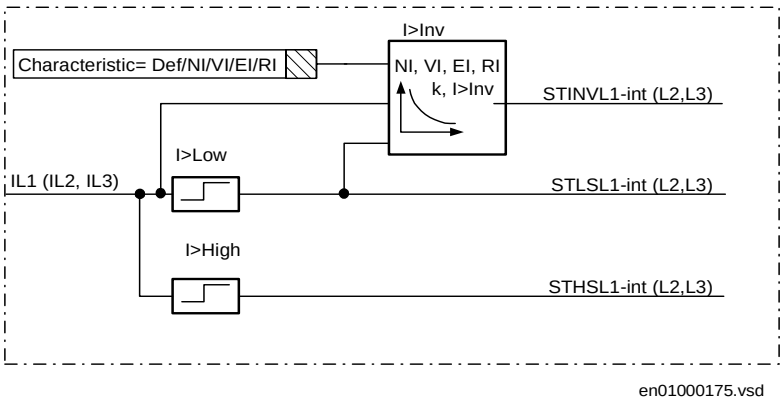

Figure 76: Simplified block diagram for definite and inverse time delayed phase overcurrent function

The inverse time delay can be set for different characteristics by the setting Characteristic = x, the x is choosen from the following:

1. Def (Definite time)
2. NI (Normal inverse)
3. VI (Very inverse)
4. EI (Extremely inverse)
5. RI (Inverse time corresponding to relays of type RI)

With setting Characteristic = Def the signal INV will be set to zero.

The different inverse time characteristics are defined in the “Technical reference manual”.

Directional overcurrent function

The directional overcurrent function uses the information from the current measuring elements as described in "Current measuring element" and the directional impedance measuring element as described for the distance protection function, to create the directional overcurrent function.

Directional phase selection

In order to use correct directional information during all types of faults the function is provided with a simple phase selection. The phase selection is assigned to distinguish between phase to earth faults and phase to phase faults.

The criteria for the two indications that are regarded in the function are:

Phase to earth fault (PE FAULT):

$$3 \cdot I_0 \geq 0.5 \cdot IMinOp$$

(Equation 136)

and

$$3 \cdot I_0 \geq INReleasePE / 100 \cdot I_{phmax}$$

(Equation 137)

Phase to phase fault (PP FAULT):

$$3 \cdot I_0 < 0.2 \cdot I_r$$

(Equation 138)

OR

$$3 \cdot I_0 < INBlockPP / 100 \cdot I_{phmax}$$

(Equation 139)

If the criteria for PE FAULT are fulfilled the phase to earth directional indications are used and if the criteria for PP FAULT are fulfilled the phase to phase directional indications are used. If all criteria are met, then only the directional indications for phase to phase are released. The aim is to preserve the phase to phase measurement also during two-phase to ground faults with high residual current (at least as long as the criteria allows, see equations above). However, the directional indications will appear also for healthy phases and in the phase to phase case the indications would overlap in an unwanted manner because the overcurrent evaluation is performed per phase only (both forward and reverse can be indicated for one phase, simultaneously). So in order to establish a complete directional phase selection the one and only faulty loop must be singled out. This is done by means of releasing the directional indication with the corresponding overcurrent indications (overcurrent in two phases is required, see figure 77).

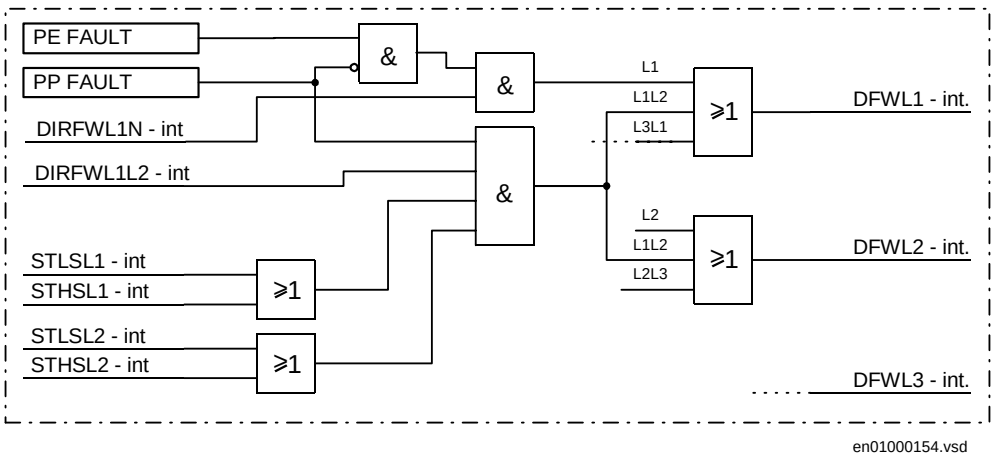

Figure 77: Excerpt from directional phase selection

Consider the case where a reverse fault is cleared and the prefault forward load conditions are retrieved. So, in order not to issue a false trip if the reversal indication is deactivated (or the forward indication becomes active) before the overcurrent indication drops, the reversal of direction is actually held back during 50 ms according to the logic of figure 78. Each phase and each set stage is provided with an individual logic circuit (six circuits in all) to allow operation during simultaneous earth faults (one forward, one reverse).

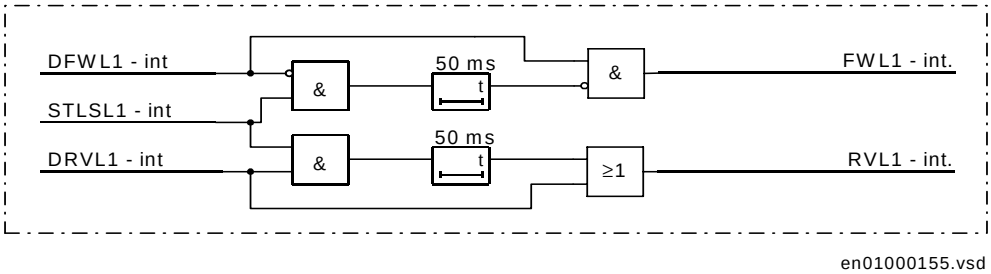

Figure 78: Current reversal logic for one phase and one set step

General overcurrent operating principles

The low and high set steps can individually be set directional or non-directional. If set in non-directional mode the overcurrent function only uses the signals from the current measuring elements as seen from figure 76. In directional mode there are two modes of operation, forward release and reverse block denoted ForwRelease and RevBlock respectively. The principles of these three modes of operation are illustrated in figure 79, below.

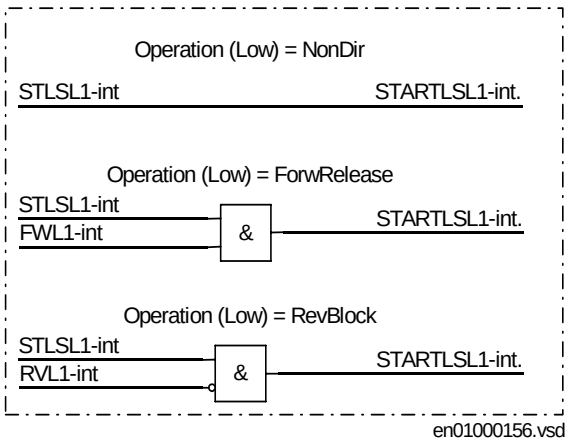

Figure 79: Directional operation modes of TOC3

In forward release operation mode a criteria that indicates that the fault is in forward direction is needed for tripping. Since the directional function needs voltage for the directional check it will not be able to operate when switching in a line against a persistent close-up three phase fault if voltage is measured on the line side of the breaker. A solution to this might be to use the SOTF function for the distance protection, with output TOC3-STND as acceleration signal.

In reverse block operation mode a criteria that indicates that the fault is in reverse direction is used for blocking the function. In this case there is no problem switching in a line against a persistent close-up three phase fault even if voltage is measured on the line side of the breaker since the directional function will not issue any reverse signal.

The general principles of time delay for the two steps of the overcurrent function is displayed in the following figure 80.

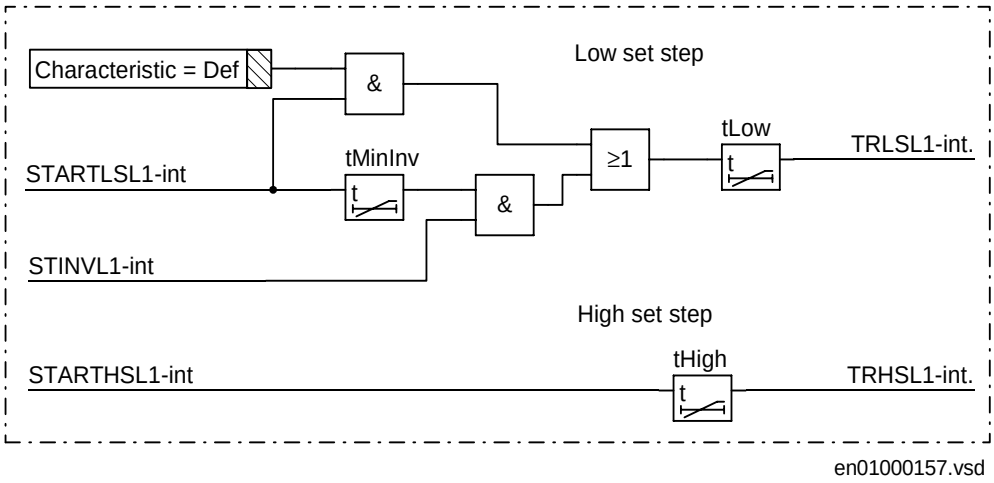

Figure 80: Delayed time operation for low set step and general time delay

General trip signals are derived from the phase segregated starts according to figure 81.

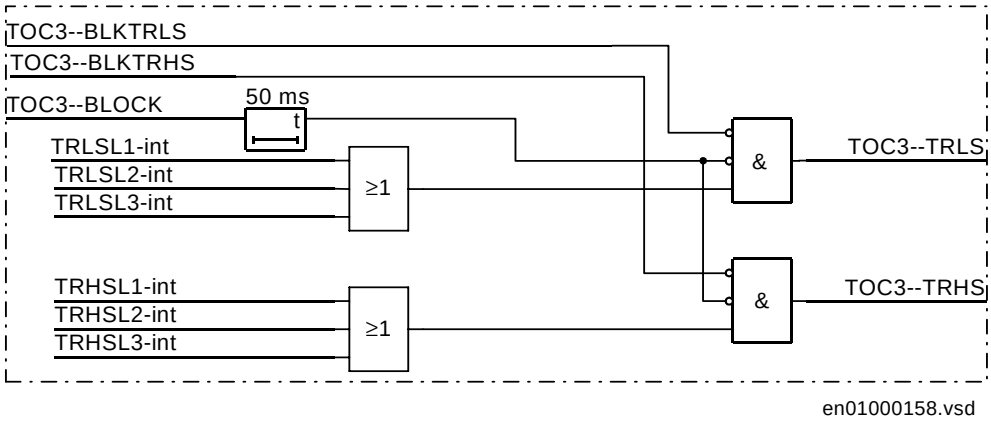

Figure 81: General trip

With setting Characteristic = Def (figure 80) the signal TOC3-TRLS will be active if, at least, one of the phase currents exceeds the set value I>Low for the low set step, and if the directional criterion is fulfilled for a longer time than the set delay tLow.

With setting Characteristic = NI/VI/EI or RI (figure 80) we have the following: If, at least one of the phase currents exceeds the set value I>Low, the timer circuit tMinInv is activated together with the inverse time measuring circuit (figure 76) in order to calculate the operating time. The operating time is determined by the magnitude of the current, characteristic choosen, set characteristic current I>Inv and time multiplier k. When both the inverse time and tMinInv have elapsed the timer tLow will be activated and after its time is elapsed the signal TOC3-TRLS is activated. It must be observed that the time delay of operation, if inverse time characteristics is used, will be the sum of the inverse time delay and the tLow setting.

The timer circuit tMinInv (figure 80) can be used to achieve a defined minimum operating time at high fault currents. The timer circuit tLow can be used for adding an additional time delay to the inverse time characteristic.

The signal TOC3-TRHS will be active if one of the phase currents exceeds the set value I>High for a longer time than the set delay tHigh at the same time as TOC--BLKTRSH and TOC--BLOCK are not present.

An external signal connected to TOC3_BLKTRLS will block tripping from low set step. The step can also be blocked with the setting Operation Low= Off.

An external signal connected to TOC3_BLKTRHS will block tripping from high set step. The step can also be blocked with the setting Operation High= Off.

An external signal connected to TOC3_BLOCK will block both low and high set steps.

Figure 82 illustrates how the start signals are formed.

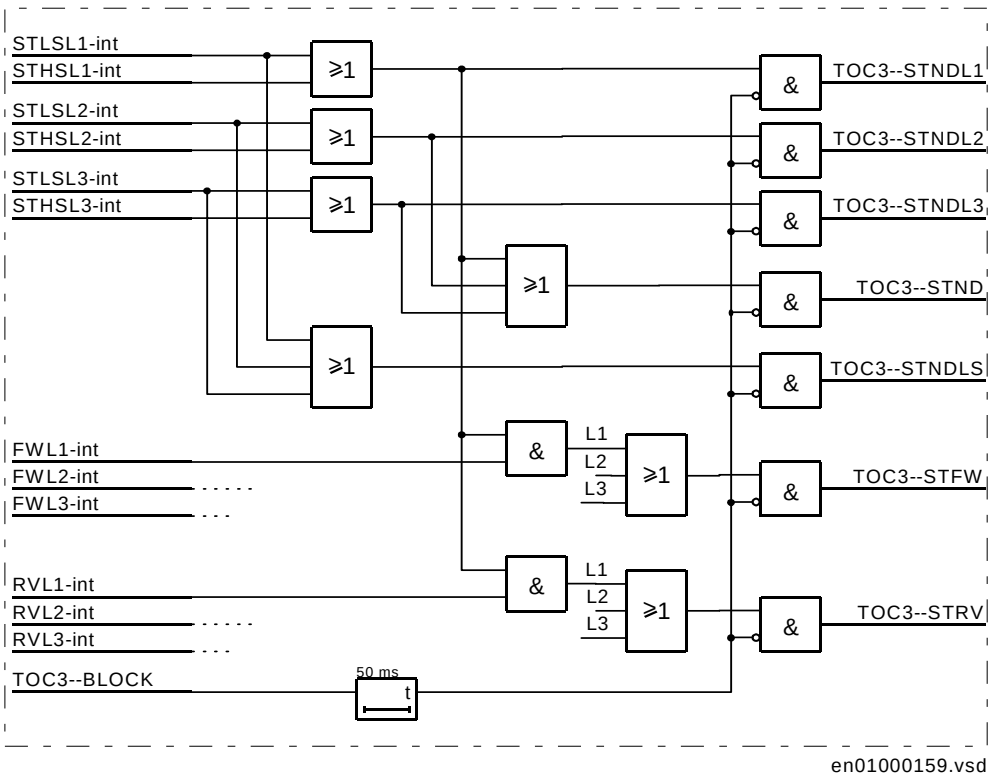

Figure 82: Start signals

As the phase segregated start signals are non directional, and used for indication only, there is no possibility to use a phase segregated transfer trip scheme. A three-phase transfer trip scheme will be applicable using the output TOC3-STFW or TOC3-STRV, keeping in mind the performance expected during simultaneous faults on parallel lines.

4.3 Calculations

4.3.1 Setting instructions

The directional phase overcurrent protection can be used in different applications. In most applications it is required that all short circuits within a protected zone shall be detected and cleared and the fault clearance shall be selective. As the protection can be used in several applications only some examples are discussed.

Line protection in a radial network

The directional phase overcurrent protection is suitable to use in radial systems with generation connected out in the system. In such a network the fault current can be fed both in the forward and reverse direction. Normally the protection will detect and trip faults in the forward direction.

The pick up current setting (inverse time functions) or the lowest current step (constant time functions) must be given a current setting so that the highest possible load current does not cause operation of the function. The reset ratio of the function has to be taken into consideration, so that a short peak of overcurrent does not cause operation of the protection even when the overcurrent has ceased.

The lowest setting value can be written:

$$I_{pu} \geq 1.2 \cdot \frac{I_{max}}{k}$$

(Equation 140)

Where:

1.2 is a safety factor due to load estimation uncertainty etc.,

k the resetting ratio of the relay (about 0.95) and

I_{max} the maximum load current.

The maximum load current on the line has to be estimated. From operation statistics the load current up to the present situation can be found. Also emergency situations must be considered. The current setting must be valid also for some years ahead.

There is also a demand that all faults, within the zone that the protection shall cover, must be detected by the phase overcurrent relay. The minimum fault current Iscmin, to be detected by the relay, must be calculated. Taking this value as a base, the highest pick up current setting can be written:

$$I_{pu} \leq 0.7 \cdot I_{scmin}$$

(Equation 141)

Where:

0.7 is a safety factor, due to calculation unsertainty and

I_{scmin} the smallest fault current to be detected by the overcurrent protection.

As a summary the pick up current shall be chosen within the interval:

$$1.2 \cdot \frac{I_{max}}{k} \leq I_{pu} \leq 0.7 \cdot I_{scmin}$$

(Equation 142)

The high current function of the overcurrent protection, which only has a short or no delay of the operation, must be given a current setting so that the protection is selective to other protections in the power system. It is desirable to have a rapid tripping of faults within as large portion as possible of the part of the power system to be protected by the relay (primary protected zone). A fault current calculation gives the largest current of faults, Iscmax, at the most remote part of the primary protected zone. The risk of transient overreach, due to a possible DC component of the short circuit current has to be taken into consideration. The lowest current setting of the most rapid stage, of the phase overcurrent relay, can be written:

$$I_{high} \geq 1.2 \cdot k_t \cdot I_{scmax}$$

(Equation 143)

Where:

1.2 is a safety factor, due to calculation unsertainty

k_t is a factor that takes care of the transient overreach due to the DC component of the fault current. kt is less than 1.05 if the power system time constant is less than 100 ms.

I_{scmax} is the largest fault current at a fault at the most remote point of the primary protection zone.

The operate times of the phase overcurrent relay have to be chosen so that the fault time is so short that equipment will not be damaged due to thermal overload, at the same time selectivity is assured. For overcurrent protection in a radial fed network, the time setting can be chosen in a graphical way. This is mostly used in the case of inverse time overcurrent protection.

Line protection in meshed network

The current setting can be made in the same way as for radial networks.

If inverse time characteristics are used with equal current and time setting for all phase current protections in the system the selectivity is assured as long as there are more than two bays carrying fault current to each substation. Sometimes this is however impossible due to the fault current distribution between the different lines.

If definite time characteristic is used the coordination between the different phase overcurrent line protections are done by means of current setting.

As the phase overcurrent protection often is used as a back-up protection of lines, where a distance protection is the main protection, relatively long operation times are acceptable for the phase overcurrent protection.

Setting characteristics

The setting parameters and ranges are shown in the setting table.

Following formulas are valid for the inverse time characteristic:

Table 9: Formulas for the inverse time characteristic

Characteristic:	Time delay(s):
Normal inverse	$t = \frac{0,14}{I^{0,02} - 1} \cdot k$ (Equation 144)
Very inverse	$t = \frac{13,5}{I - 1} \cdot k$ (Equation 145)
Extremely inverse	$t = \frac{80}{I^{2} - 1} \cdot k$ (Equation 146)
RI inverse	$t = \frac{1}{0,339 - \langle (0,236) / I \rangle} \cdot k$ (Equation 147)

Where:

I	denotes (measured current)/ I>Inv and
k	is a time multiplier with setting range 0,05 - 1,10.

The decisive factors for the setting of inverse time characteristic are the allowable time for disconnection of fault at minimum fault current that the function shall operate for together with selectivity at maximum fault current.

The settings are given in Setting table. Setting of parameters are found in the menu under:

Settings
Functions
Group n (n=1-4)
DirInvTDelay

5 Definite and inverse time-delayed residual overcurrent protection (TEF)

5.1 Application

This earth-fault overcurrent protection is intended for solidly earthed networks.

Earth-fault overcurrent protection

In case of single-phase earth-faults, the primary fault resistance varies with the network conditions, the type of fault and location of the fault. In many cases, the fault resistance is much higher than the resistance that can be covered by an impedance-measuring distance protections. This can be the case with a phase to earth fault to a tower with large tower footing resistance.

Earth-faults with high fault resistances can be detected by measuring the residual current ($3I_0$).

The inrush current can cause unwanted tripping of the earth-fault overcurrent relay when energizing a directly earthed power transformer. The earth-fault overcurrent protection is therefore provided with second harmonic restraint, which blocks the operation if the residual current ($3I_0$) contains 20% or more of the second harmonic component.

In some cases, it is possible to improve the selectivity by adding a settable minimum operate current (IMin) and a minimum operate time (tMin) to the inverse characteristic. These functions are included in the earth-fault protection modules.

To minimize the operate time, in case of closing the circuit breaker to a fault, the residual overcurrent protection module is provided with a switch-onto-fault logic, which can be activated at breaker closure. The tripping time will temporarily be reduced to 300 ms.

Directional earth-fault protection is obtained by measuring the residual current and the angle between this current and the zero-sequence voltage ($3U_0$).

It is possible to obtain the polarizing voltage ($-3U_0$) from an open delta winding in the voltage transformer or via summation of the three phase voltages supplied to the terminal.

The $3I_0$ current lags the polarizing voltage ($-3U_0$) by a phase angle equal to the angle of the zero-sequence source impedance. In solidly earthed networks, this angle is in the range of 40° to nearly 90°. The high value refers to stations with directly earthed transformers with delta winding. To obtain maximum sensitivity at all conditions, the forward measuring element should have a characteristic angle of 65°.

As a general rule, it is easier to obtain selectivity by using directional instead of non-directional earth-fault overcurrent protection, but sufficient polarizing voltage must be available.

It is not possible to measure the distance to the fault by using the zero-sequence components of the current and voltage, because the zero-sequence voltage is a product of the zero-sequence components of current and source impedance. It is possible to obtain selectivity by the use of a directional comparison scheme, which uses communication between the line ends.

If a communication scheme can not be used, the best selectivity is generally obtained by using inverse time delay. All relays, in the network, must have the same type of inverse characteristic. An earth-fault on a line is selectively tripped if the difference between the residual current ($3I_0$) out on the faulted line and the residual current ($3I_0$) out on the other lines gives a time difference of 0.3-0.4 seconds. A logarithmic characteristic is generally the most suitable for this purpose, because the time difference is constant for a given ratio between the currents.

Directional comparison logic function

In the directional comparison scheme, information of the fault current direction must be transmitted to the other line end. A short operate time enables auto-reclosing after the fault. During a single-phase reclosing cycle, the auto-reclosing device must block the directional comparison earth-fault scheme.

A communication logic block for residual overcurrent protection can be included in the REx 5xx terminal to provide this feature. The function contains circuits for blocking overreach and permissive overreach schemes. See the section *"Communication logic for residual overcurrent protection"*.

Also an additional communication logic block for the communication can be included. It contains logic for the weak-end-infeed and current-reversal functions, which are used only in the permissive overreach scheme. See the section *"Current reversal and weak end infeed logic for residual overcurrent protection*.

5.2 Functionality

5.2.1 Theory of operation

Directional earth-fault overcurrent protection

This protection measures the residual current ($3I_0$) and the residual voltage ($3U_0$). Figure 83 shows the current measuring, time delay and logic circuits (both with and without directional check) of this protection function.

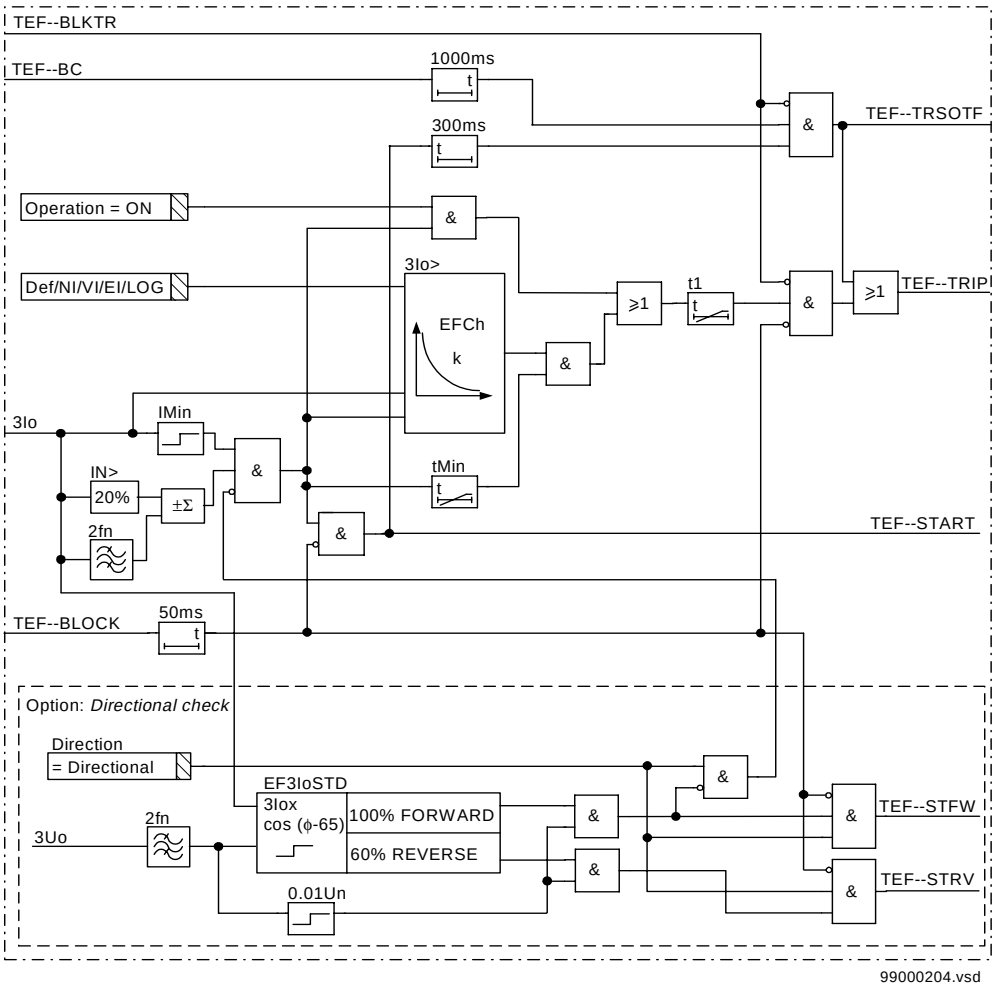

Figure 83: Simplified logic diagram for the residual overcurrent protection

Activate the independent time-delay function by setting *Characteristic*= Def (or inverse time delay according to the setting table). The t1 timer starts when both the definite/inverse time characteristic and the tMin timer operate. The tMin timer starts when the $3I_0$ current to the relay is equal to or higher than the set operate value for IMin and the content of the second harmonic in $3I_0$ is less than 20%.

The inverse time calculation starts when $3I_0$ is equal to or higher than the set operate value for IMin and the content of the second harmonic in $3I_0$ is less than 20%. The inverse time delay is determined by the selection of the characteristic (NI, VI etc.) in the Characteristic setting and the setting of the characteristic IN> current.

The t1 timer is normally set to zero. Use it to add a constant time to the inverse time delay. Figure 84 shows the effect of the IMin and tMin settings on the inverse characteristic.

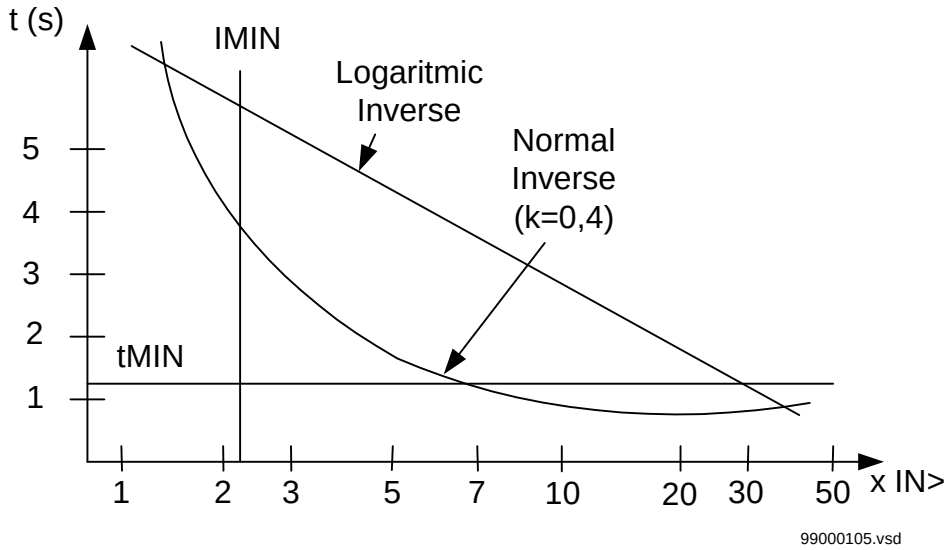

Figure 84: Normal inverse and logarithmic inverse time characteristics.

The switch-onto-fault function is used to minimise the operate time in case of pole discrepancy at breaker closing and in cased of closing on to a fault. The function is released by activating the TEF--BC binary input. The function is activated for 1 second after the reset of the TEF--BC binary input.

The function is blocked by activating the TEF--BLOCK binary input.

Activating the TEF--BLKTR blocks the definite/inverse delay trip outputs TEF--TRIP and the switch-on-to-fault trip TEF-TRSOTF.

The $3I_0$ current lags the polarising voltage ($3U_0$) by a phase angle equal to the angle of the zero-sequence source impedance. The forward measuring element operates when:

$$3I_0 \cdot \cos(\varphi - 65°) \geq IN>Dir$$

(Equation 148)

Where:

φ	is the angle between $3I_0$ and $3U_0$ (positive if $3I_0$ lags $3U_0$)
IN>Dir	is the set operate value

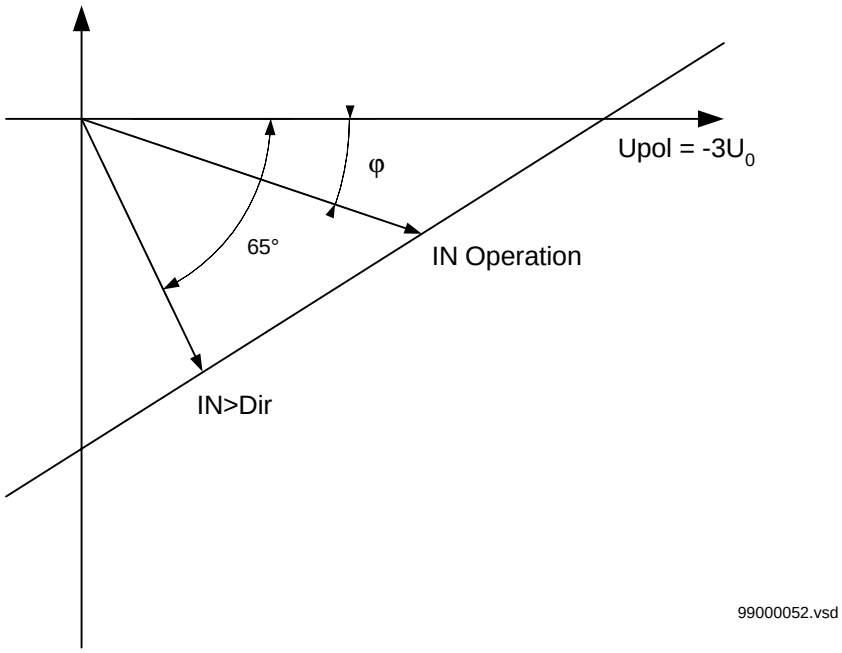

Figure 85: Measuring characteristic of the directional element

The change in operate value is small when the phase angle deviates moderately from 65°. A deviation of 20° increases the operate value by only 6.5%.

The polarising voltage, normally obtained from the broken delta windings of the VTs, can have a high content of harmonics relative to the fundamental frequency when the output voltage is low, particularly when capacitive VTs are used. To secure a correct measurement, the directional function must have an effective bandpass filtering of the voltage. In the module, the filtering secures a correct function for fundamental frequency polarising voltages down to 1% of the rated voltage.

In case of an external fault, the capacitive current generated on the line decreases the current to the earth-fault relay situated at the line end towards the fault. So the reverse direction comparator must have an increased sensitivity to secure reliable blocking in case of external faults when a directional comparison or a blocking communication scheme is used. The operate current of the reverse direction measuring element in the module is, as a fixed ratio, set at 0.6 IN> Dir.

5.3 Calculations

5.3.1 Setting instructions

To detect high resistive earth-faults, a low operate current is required. On the other hand, a low setting increases the risk for unwanted operation due to imbalance in the network and the current transformer circuits. Set the minimum operate current (IN> *IMin) of the earth-fault overcurrent protection higher than the maximum false earth-fault current. If the directional function is chosen, set the start level of the directional function (IN> Dir) higher than the maximum false earth-fault current.

The imbalance in the network that causes false earth-fault currents is caused mainly by untransposed or not fully transposed parallel lines with strong zero-sequence mutual coupling. There might also be high imbalance currents for non-transposed single circuit lines if the zero sequence source impedance is low at both line ends. This false earth-fault current is directly proportional to the load current.

In a well-transposed system, the false earth-fault current is normally lower than 5% of the line current.

In case of not fully transposed parallel lines, measure or calculate the false earth-fault current at maximum load.

The choice of time delay characteristics - definite time, normal inverse, very inverse, extremely inverse or logarithmic inverse - depends on the network. To achieve optimum selectivity, use the same type of characteristic for all earth-fault overcurrent protections in the network. This means that in networks already equipped with earth-fault overcurrent relays, the best selectivity is normally achieved by using the same type of characteristic as in the existing relays.

The following formulas for the operate time (in seconds) apply to the characteristic used within the REx 5xx terminal with line protection, see table 10.

Table 10: Operate time formulas

Characteristics	Operate time (s)
Normal inverse	$t = \frac{0.14}{I^{0.02} - 1} \cdot k$ (Equation 149)
Very inverse	$t = \frac{13.5}{I - 1} \cdot k$ (Equation 150)
Extremely inverse	$t = \frac{80}{I^{2} - 1} \cdot k$ (Equation 151)
Logarithmic inverse	$t = 5.8 - (1.35 \cdot \ln I)$ (Equation 152)

Where:

I is a multiple of set current $3I_0$>

k is a time multiplying factor, settable in the range of 0.05 to 1.10

All inverse time characteristic settings are a compromise between short fault clearing time and selective operation in a large current range. The main determining factors are the maximum allowed fault-clearing time at the maximum fault resistance to be covered and the selectivity at maximum fault current.

Set the minimum operate current (IMin) of the earth-fault overcurrent protection to one to four times the set characteristic quantity (IN>) of the inverse time delay. So an inverse characteristic with a low set IN> set to get a short operate time at minimum fault current can be combined with a higher set IMin minimum operate current, to avoid unwanted operation due to false earth-fault currents.

Set the minimum operate time independent of the inverse time characteristic. Normally, set this time longer than the time delay of distance zone 2 in REx 5xx to avoid interference with the impedance measuring system in case of earth-faults with moderate fault resistance within zone 2.

When a solidly earthed, power transformer is energized, an inrush current normally flows in the neutral-to-earth connection of the transformer. This current is divided among other earthed transformers and lines connected to the same bus, inversely proportional to their zero-sequence impedance. The amplitude and time duration of this current can be sufficiently large to cause the unwanted operation of a sensitive earth-fault overcurrent protection.

The earth-fault overcurrent protection has a built-in second harmonic current stabilization, which prevents unwanted operation if the inrush current has a second harmonic content of 20% or more. This is normally the case. On rare occasions, it may be necessary to increase the setting of the operate value for the residual earth-fault overcurrent protection to avoid unwanted operation due to transformer inrush current.

When single-phase auto-reclosing is used, the minimum time of the inverse time delayed residual overcurrent protection (tMin) should be set to be longer than the time from the occurrence of the fault to the reclosing of the breaker at both line terminals. An alternative method is to block the earth fault protection by the autorecloser during the dead time. This avoids unwanted three-phase tripping during a single-phase autoreclosing cycle controlled by the distance protection.

The polarizing voltage for directional earth-fault overcurrent protection is normally obtained from the broken delta windings of instrument voltage transformers or by internal calculation. The voltage contains a certain amount of harmonics, especially when the protection is connected to CVTs.

Due to the bandpass filtering a polarizing voltage down to 1 percent of the rated voltage will provide correct directional functionality. This is also valid when the protection is connected to CVTs.

The minimum polarizing voltage to the protection (Umin) is calculated from the formula:

$$U_{min} = I_{F\,min} \cdot Z_{0\,min} \cdot \frac{U_{sec}}{U_{prim}}$$

(Equation 153)

Where:

I_{Fmin}	is the minimum primary operate fault current
Z_{0min}	is the minimum zero-sequence impedance seen from the relay
U_{sec}, U_{prim}	are the rated phase voltages of the broken delta connected CVTs (VTs)

Observe that when a blocking scheme or a permissive scheme with current reversal or weak-end-infeed logic is used, IFmin represents the primary operate current of the reverse-looking directional element which is 60% of the forward element.

To even secure operation in unfavorable cases, Umin must be equal to at least 1 volt plus the maximum network frequency false voltage, due to measuring errors in the VT circuits.

If not blocked, the directional comparator operates during the dead time in case of a single-phase auto-reclosure. So the TEF--BLOCK blocking input must be activated during the single-phase auto-reclosing cycle.

6 Scheme communication logic for residual overcurrent protection (EFC)

6.1 Application

This communication logic is intended for residual overcurrent protections.

To achieve fast fault clearing for a fault on the part of the line not covered by the instantaneous zone 1, the directional residual overcurrent protection function can be supported with logic, that uses communication channels.

One communication channel in each direction, which can transmit an on/off signal is required. The performance and security of this function is directly related to the transmission channel speed and security against false or lost signals. So special channels are used for this purpose. When power line carrier is used for communication, these special channels are strongly recommended due to the communication disturbance caused by the primary fault.

In the directional comparison scheme, information of the fault current direction must be transmitted to the other line end.

With directional comparison, an operate time of 50-60 ms, including a channel transmission time of 20 ms, can be achieved. This short operate time enables rapid automatic reclosing function after the fault.

During a single-phase reclosing cycle, the auto-reclosing device must block the directional comparison earth-fault scheme.

The communication logic module for the REx 5xx terminal contains circuits for blocking overreach and permissive overreach schemes. The module also contains logic for the weak-end-infeed and current-reversal functions, which are used only in the permissive overreach scheme.

6.2 Functionality

6.2.1 Theory of operation

Directional comparison logic function

The directional comparison function contains logic for blocking overreach and permissive overreach schemes.

The circuits for the permissive overreach scheme contain logic for current reversal and weak-end-infeed functions. These functions are not required for the blocking overreach scheme.

Use the independent or inverse time functions in the directional earth-fault protection module to get back-up tripping in case the communication equipment malfunctions and prevents operation of the directional comparison logic.

Connect the necessary signal from the auto-recloser for blocking of the directional comparison scheme, during a single-phase auto-reclosing cycle, to the EFC--BLOCK input of the directional comparison module.

Blocking scheme

In the blocking overreach scheme, a signal is sent to the other line end if the directional element detects a fault in the reverse direction. When the forward directional element operates, it trips the line after a short time delay if no blocking signal is received from the other line end. The time delay, normally 30-40 ms, depends on the communication transmission time and the chosen safety margin.

One advantage of the blocking scheme is that only one channel (carrier frequency) is needed and the channel can be shared with the impedance-measuring system, if that also works in the blocking mode. The communication signal is also transmitted on a healthy line and no signal attenuation will occur due to the fault.

Blocking schemes are particularly favourable for three-terminal applications if there is no zero-sequence current outfeed from the tapping. The blocking scheme is immune to current reversals because the received carrier signal is maintained long enough to avoid unwanted operation due to current reversal. There is neither any need for weak-end-infeed logic, because the strong end trips for an internal fault when no blocking signal is received from the weak end. But the fault clearing time is generally longer for a blocking scheme than for a permissive one.

If the fault is on the line, the forward direction measuring element operates. If no blocking signal comes from the other line end via the EFC--CR binary input (carrier receive) the EFC--TRIP output is activated after the tCoord set time delay.

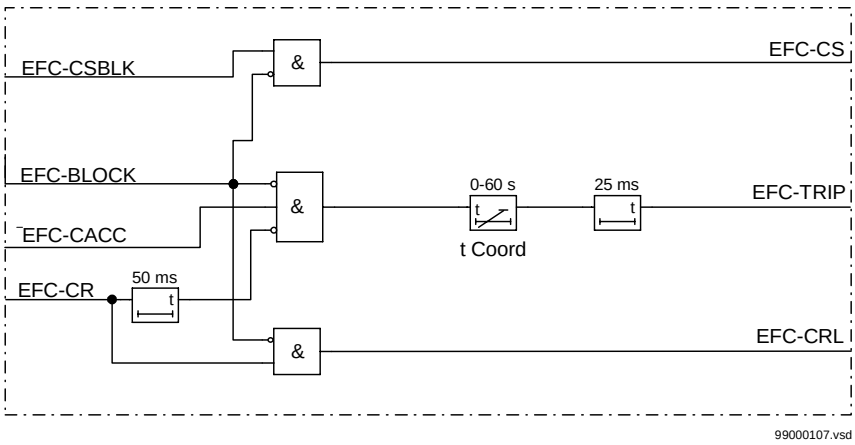

Figure 86: Simplified logic diagram, Scheme type = blocking

Permissive overreach scheme

In the permissive scheme, the forward directed measuring element sends a permissive signal to the other line end if a fault is detected in the forward direction. The directional element at the other line end must wait for a permissive signal before giving a trip signal. Independent channels (frequencies) must be available for the communication in each direction.

An impedance-measuring relay which works in an underreach permissive mode with one channel in each direction can share the channels with the earth-fault overcurrent protection. If the impedance measuring relay works in the permissive overreach mode, common channels can be used in single-line applications. In case of double lines connected to a common bus at both ends, use common channels only if the ratio Z_{1S} / Z_{0S} (positive through zero-sequence source impedance) is about equal at both line ends. If the ratio is different, the impedance measuring and the directional earth-fault current system of the healthy line may detect a fault in different directions, which could result in unwanted tripping.

Common channels can not be used when the weak-end-infeed function is used in the distance or earth-fault protection.

In case of an internal fault, the forward directed measuring element operates and sends a permissive signal to the remote end via the EFC--CS output (carrier send). Local tripping is permitted when the forward direction measuring element operates and a permissive signal is received via the EFC--CR binary input (carrier receive).

The total operate-time for the system is the sum of the Pick-up time (of the measuring element) and the Transmission time (of the permissive signal)

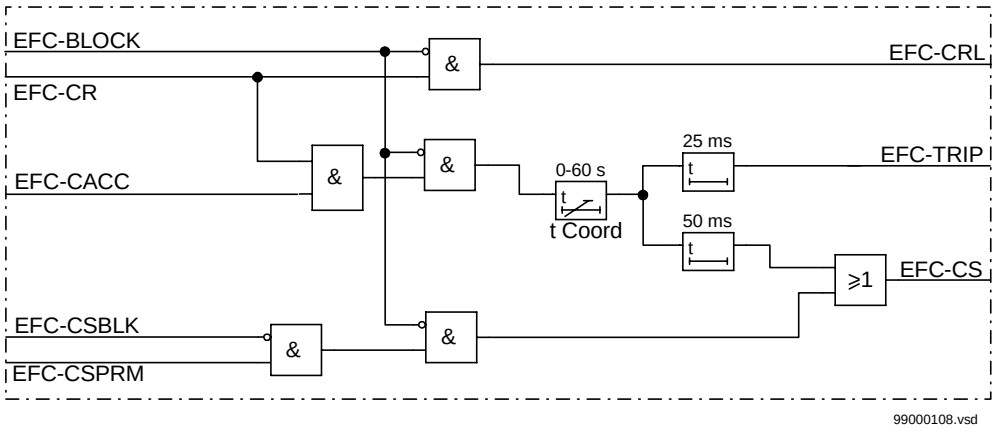

Figure 87: Simplified logic diagram, Scheme type = permissive

6.3 Design

Blocking scheme

In the blocking scheme, a signal is sent to the other line end if the directional element in TEF function, connected to the EFC--CSBLK input signal, detects a fault in the reverse direction. When the forward directional element operates, it trips the line after a short time delay if no blocking signal is received from the other line end. The time delay, normally 30-40 ms, depends on the communication transmission time and the chosen safety margin.

Permissive overreaching scheme

In the permissive scheme, the forward direction measuring element in TEF function, connected to the EFC--CSPRM input, sends a permissive signal to the other line end if a fault is detected in the forward direction. The directional element at the other line end must wait for a permissive signal before giving a trip signal. Independent channels (frequencies) must be available for the communication in each direction.

6.4 Calculations

6.4.1 Setting

The settings are done from the local HMI under the menu:

Settings
Functions
Group n (n = 1.4)
Earth Fault
EFCom

Blocking scheme

In the blocking scheme, set the tCoord timer to the channel transmission time during disturbance conditions. Add a margin of 20-30 ms. Two times the nominal value of the channel transmission time is recommended when a power line carrier is used.

Permissive communication scheme

In the permissive communication scheme, the security against unwanted operation caused by spurious carrier receive signals can be increased by delaying the tripping output with the tCoord timer. Set the timer in the range of 0.000 to 60.000 s. In most cases, a time delay of 30 ms is sufficient.

7 Current reversal and weak end infeed logic for residual overcurrent protection (EFCA)

7.1 Application

This additional communication logic is intended for the Communication logic for residual overcurrent protections.

To achieve fast fault clearing for a fault on the part of the line not covered by the instantaneous zone 1, the earth-fault protection functions can be supported with logic, that uses communication channels. REx 5xx terminals have for this reason available a scheme communication logic. Different system conditions require in many cases additional special logic circuits, like current reversal logic and weak-end-infeed logic. Both functions are available within the additional communication logic for earth-fault protection.

Current reversal logic

If parallel lines are connected to common buses at both terminals, overreaching permissive communication schemes can trip unselectively due to fault current reversal. This unwanted tripping affects the healthy line when a fault is cleared on the other line. This lack of security can result in a total loss of interconnection between the two buses.

To avoid this type of disturbance, a fault current-reversal logic (transient blocking logic) can be used.

Weak end infeed logic

Permissive communication schemes can basically operate only when the protection in the remote terminal can detect the fault. The detection requires a sufficient minimum fault current. The fault current can be too low due to an opened breaker or low short-circuit power of the source. To overcome these conditions, weak end infeed (WEI) echo logic is used.

The fault current can also be initially too low due to the fault current distribution. Here, the fault current increases when the breaker opens in the strong terminal and a sequential tripping is achieved. This requires a detection of the fault by an independent-tripping zone 1. To avoid sequential tripping as described and when zone 1 is not available, weak end infeed tripping logic is used.

7.2 Functionality

7.2.1 Theory of operation

Directional comparison logic function

The directional comparison function contains logic for blocking overreach and permissive overreach schemes.

The circuits for the permissive overreach scheme contain logic for current reversal and weak end infeed functions. These functions are not required for the blocking overreach scheme.

Use the independent or inverse time functions in the directional earth-fault protection module to get back-up tripping in case the communication equipment malfunctions and prevents operation of the directional comparison logic.

Figures 90, 91 and 92 shows the logic circuits.

Connect the necessary signal from the auto-recloser for blocking of the directional comparison scheme, during a single-phase auto-reclosing cycle, to the EFCA-BLOCK input of the directional comparison module.

Fault current reversal logic

Figures 88 and 89 show a typical system condition, which can result in a fault current reversal; note that the fault current is reversed in line L2 after the breaker opening. This can cause an unselectiv trip on line L2 if the current reversal logic does not block the permissive overreach scheme in the terminal at B:2.

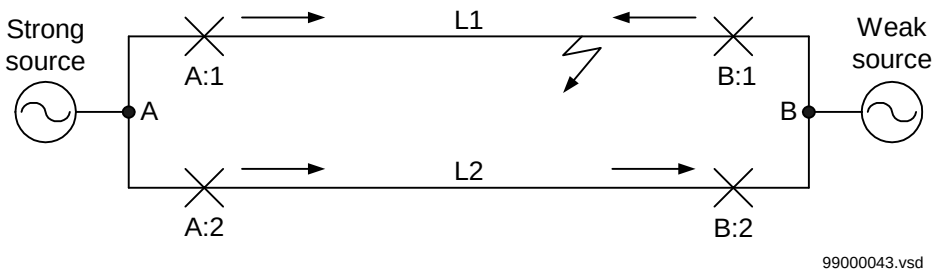

Figure 88: Initial condition

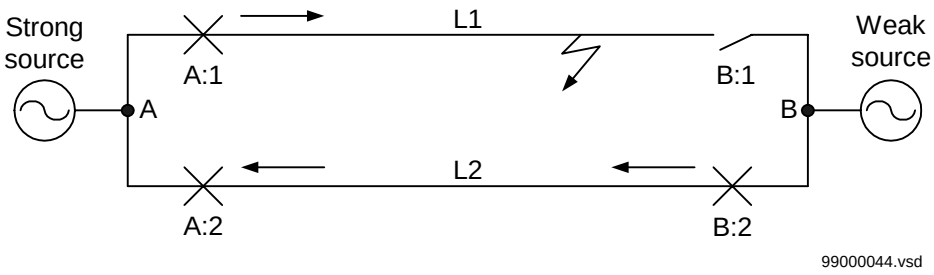

Figure 89: Current distribution after the breaker at B:1 is opened

The fault current reversal logic uses a reverse directed element, connected to EFCA-IRV, which in terminal at B:2 recognises the fault on the L1 line. See Figure 88. When the reverse direction element is activated during the tPickUp time, the EFCA-IRVL signal is activated, see figure 90. The logic is now ready to handle a current reversal without tripping. EFCA-IRVL will be connected to the block input on the permissive overreach scheme.

When breaker in B:1 operate, the fault current is reversed in line L2. The terminal at B:2 recognises now the fault in forward direction. Together with the remaining carrier received signal it will trip the breaker in B:2. To ensure that this does not occur, the permissive overreach function need to be blocked by EFCA-IRVL, until the carrier receive signal is reset.

When the fault current is reversed in line L2, EFCA-IRV is deactived and EFCA-IRVBLK is actived. The reset of EFCA-IRVL is delayed by the tDelay time, see figure 90. This ensures the reset of the carrier receive EFCA-CR signal in terminal B:2.

In terminal A:2, where the forward direction element was initially activated. This direction element must reset before the carrier send signal is initiated from B:2. The delayed reset of EFCA-IRVL also ensures the carrier send signal from terminal B:2 is held back until the forward direction element is reset in terminal A:2.

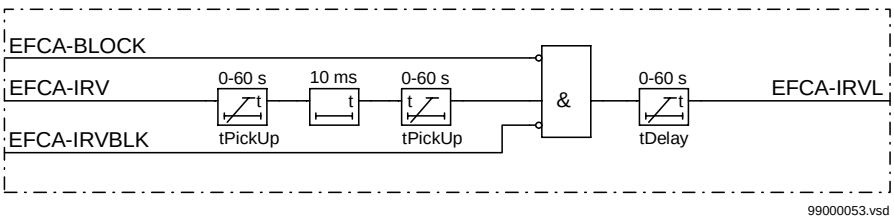

Figure 90: Simplified logic diagram, current reversal

Weak and infeed logic

Figure 91 shows a typical system condition, which can result in a missing operation; note that there is no fault current from node B. This cause that terminal at B cannot detect the fault and trip the breaker in B. To cope with this situation, a selectable weak end infeed logic is provided for the permissive overreach scheme.

The weak end infeed function can be set to send only an echo signal (WEI=Echo) or an echo signal and a trip signal (WEI=Trip). See figures 92 and 93.

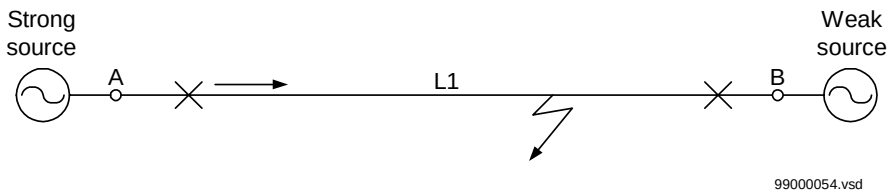

Figure 91: Initial condition

The weak end infeed logic uses normally a reverse and a forward direction element, connected to EFCA-WEIBLK via an OR-gate. See figure 92. If neither the forward nor the reverse directional measuring element is activated during the last 200 ms. The weak-end-infeed logic echoes back the received permissive signal. See figure 92.

If the forward or the reverse directional measuring element is activated during the last 200 ms, the fault current is sufficient for the terminal in B to detect the fault with the earth-fault function that is in operation.

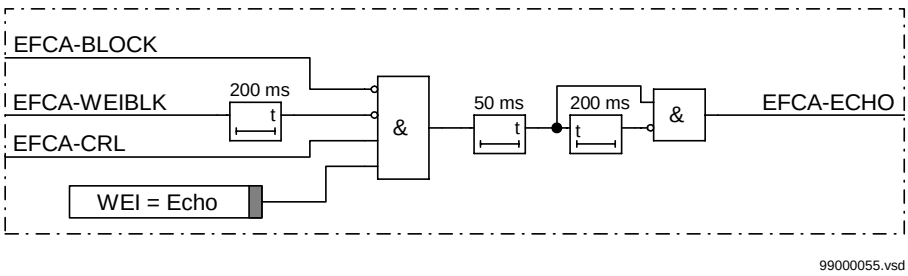

Figure 92: Simplified logic diagram, weak end infeed - echo.

With the Trip setting, the logic sends an echo according to above. Further, it activates the EFCA-TRWEI signal to trip the breaker if the echo conditions are fulfilled and the neutral point voltage is above the set operate value for $3U_0$.

The voltage signal that is used to calculate the zero sequence voltage is set in the earth-fault function that is in operation.

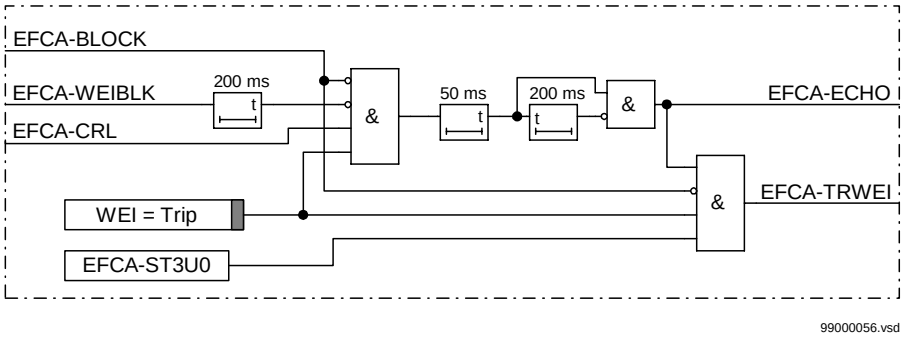

Figure 93: Simplified logic diagram, weak end infeed - Trip.

The weak end infeed echo sent to the strong line end has a maximum duration of 200 ms. When this time period has elapsed, the conditions that enable the echo signal to be sent are set to zero for a time period of 50 ms. This avoids ringing action if the weak end echo is selected for both line ends.

7.3 Design

The complete EFCA additional logic for the directional residual OC protection is consisting of two parts: Current reversal logic and weak end infeed logic. Each of them has its own setting parameters and possibility for its own configuration.

Figure 94 presents a simplified logic diagram for the current reversal function. The reverse directed signal from the TEF directional residual OC function should be connected to the EFCA-IRV functional input, to start the operation of a logic. The EFCA-IRVL signal will be activated, if the fault has been detected in reverse direction for more than the tPickUp time set on the corresponding timers.

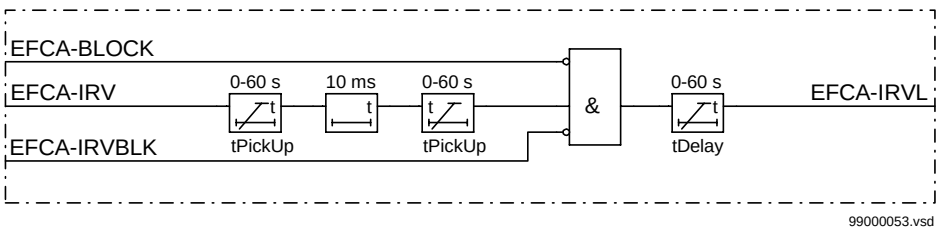

Figure 94: Simplified logic diagram, current reversal

The tDelay timer delays the reset of the output signal, when the current reversal occurs and the fault is detected in the forward direction. This prevents the TEF function to operates unnecessarily during the current reversal conditions.

The weak end infeed function can be set to send only an echo signal (WEI=Echo) or an echo signal and a trip signal (WEI=Trip). The function is released with either of the WEI=Echo or WEI=Trip settings in the menu.

The weak end infeed logic uses normally a reverse and a forward directional element, connected to EFCA-WEIBLK via an OR-gate. The weak-end-infeed logic echoes back the received permissive signal, if neither the forward nor the reverse directional measuring element is activated during the last 200 ms.

With the Trip setting, the logic sends an echo according to above. Further, it activates the EFCA-TRWEI signal to trip the breaker if the echo conditions are fulfilled and the residual voltage is above the set operate value for $3U_0>$.

7.4 Calculations

7.4.1 Setting

The settings are done from the local HMI under the menu:

Settings
Functions
Group n (n = 1..4)
Earth Fault
ComIRevWeiEF

Current reversal

The Current-reversal function is set on and off by setting the parameter CurrRev = On/Off. Time delays shall be set for the timers tPickUp and tDelay.

tPickUp is chosen shorter (<80%) than the breaker opening time, but minimum 20 ms.

tDelay is chosen at a minimum to the sum of protection reset time and the communication reset time. A minimum tDelay setting of 40 ms is recommended.

Weak end infeed

The weak end infeed can either be set off or to echo or trip by setting the parameter WEI = Off/Echo/Trip. (Echo = Echo, Trip = Echo + Trip). Operate zero sequence voltage for WEI trip is set with Ugr = xx % of Ub.

The zero sequence voltage for a fault at the remote line end and appropriate fault resistance is calculated.

To avoid unwanted trip from the weak end infeed logic (if spurious carrier signals should occur), set the operate value of the broken delta voltage level detector ($3U_0$) higher than the maximum false network frequency residual voltage that can occur during normal service conditions. The recommended minimum setting is two times the false zero-sequence voltage during normal service conditions.

Chapter 6 Voltage

About this chapter

This chapter describes the voltage protection functions.

1 Time delayed undervoltage protection (TUV)

1.1 Application

Undervoltage protection prevents the sensitive elements from running under conditions that could cause their overheating and thus shorten their life expectancy below the economical limits. In many cases, it is a useful tool in circuits for local or remote automation processes in the power system.

1.2 Design

The voltage measuring elements within one of the built-in digital signal processors continuously measure the phase-to-neutral voltages in all three phases. Recursive Fourier filter filters the input voltage signals and a separate trip counter prevents high overreaching or underreaching of the measuring elements.

1.3 Calculations

The parameters for the undervoltage protection are set on the local HMI under the menu:

Settings
Functions
Group n (n = 1...4)
TimeDelayUV

All the voltage conditions in the system where the undervoltage protection performs its functions should be considered. The same also applies to the associated equipment, its voltage and time characteristic.

2 Time delayed overvoltage protection (TOV)

2.1 Application

The application areas of the overvoltage protection functions are different in distribution and transmission networks.

The overvoltage protection is used to protect the equipment and its insulation against overvoltage. In this way it prevents damage to the equipment in the power system and shortening of their life time.

2.2 Functionality

The phase overvoltage protection function continuously measures the three phase voltages and initiates the corresponding output signals if the measured phase voltages exceed the preset value (starting) and remain high longer than the time delay setting on the timers (trip). This function also detects the phases which caused the operation.

2.3 Design

Figure 95 shows a simplified logic diagram of the overvoltage protection function. The time delayed residual overvoltage protection and the time delayed overvoltage protection share some input signals and logical elements. For this reason and for the sake of better overview both the protections are shown in the figure.

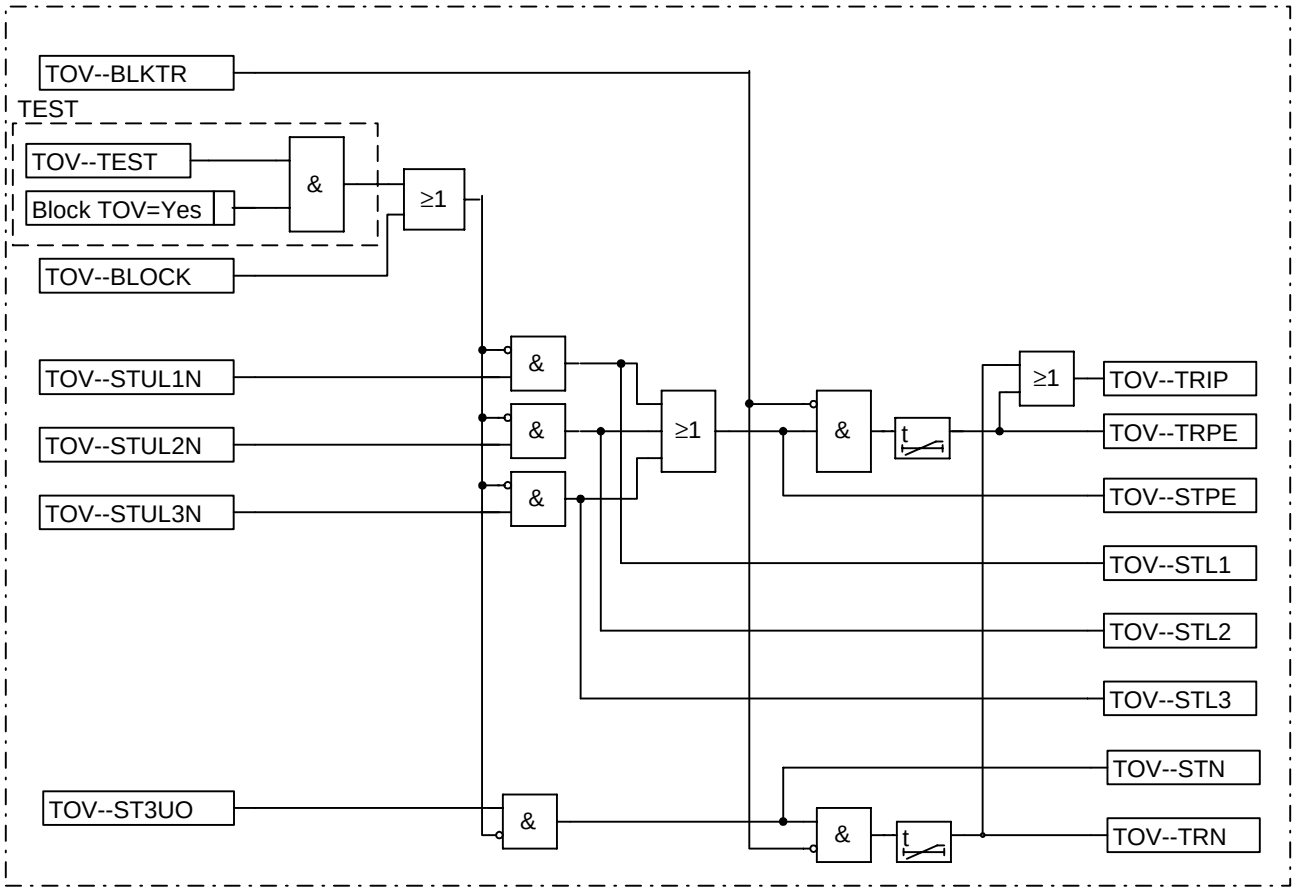

Figure 95: Time delayed overvoltage protection - simplified logic diagram

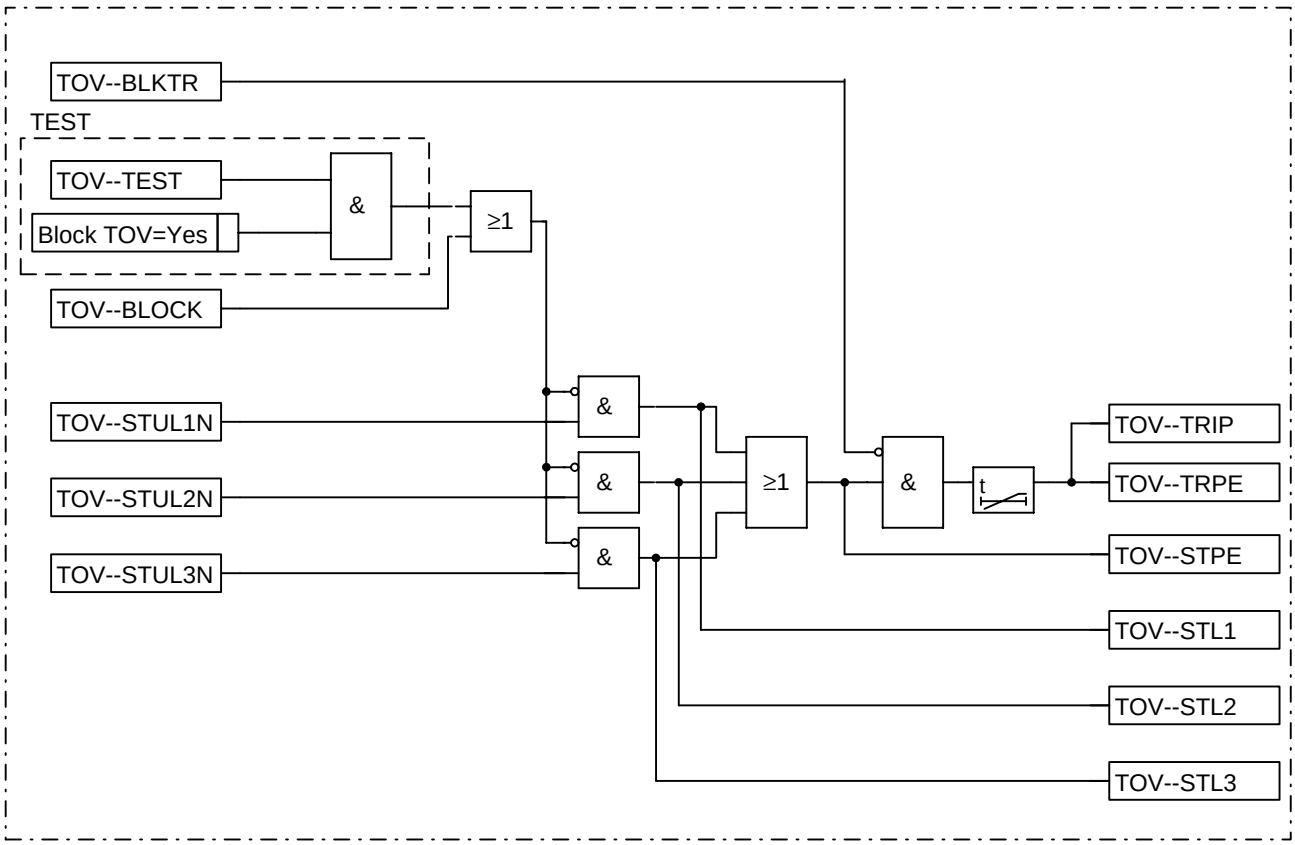

Figure 96: Logic diagram, time delayed overvoltage protection, phase wise

The TOV--TRIP and TOV--TRPE output signals changes from logical 0 to logical 1 if at least one of the logical signals TOV--STUL1N, TOV--STUL2N, TOV--STUL3N remains equal to logical 1 for a time longer than the set value on the corresponding timer. The signal TOV--TRPE will be high, to indicate that the overvoltage protection caused the trip

Any signal connected to the TOV--BLOCK input blocks the operation of the time delayed overvoltage protection. Similarly any signal connected to TOV--BLKTR will block the trip output from the time delayed overvoltage protection.

2.4 Calculations

2.4.1 Setting

The time delayed overvoltage protection parameters can be set on the local HMI under the menu:

Settings
Functions
Group n (n = 1...4)
TimeDelayOV

All the voltage conditions in the system where the overvoltage protection performs its functions must be considered. The same also applies to the associated equipment, its voltage-time characteristic.

The overvoltage protection should be set higher than the expected maximum system operate voltage that is in a particular part of a network. A safety margin of at least 10% should also be considered due to the inaccuracies in the instrument transformers, calculation methods, and the inaccuracy of the measuring elements in the terminal.

Chapter 7 Secondary system supervision

About this chapter

This chapter describes the secondary system supervision functions.

1 Fuse failure supervision (FUSE)

1.1 Application

Different protection functions within the REx 5xx protection, control and monitoring terminals operate on the basis of the measured voltage in the relay point. Examples are: distance protection function, undervoltage measuring function and voltage check for the weak infeed logic.

These functions can operate unnecessarily if a fault occurs in the secondary circuits between the voltage instrument transformers and the terminal.

It is possible to use different measures to prevent such unwanted operations. Miniature circuit breakers in the voltage measuring circuits, located as close as possible to the voltage instrument transformers, are one of them. Separate fuse-failure monitoring relays or elements within the protection and monitoring devices are another possibilities. These solutions are combined to get the best possible effect in the fuse failure supervision function (FUSE) of REx 5xx terminals.

The fuse-failure supervision function as built into the REx 5xx terminals can operate on the basis of external binary signals from the miniature circuit breaker or from the line disconnector. The first case influences the operation of all voltage-dependent functions while the second one does not affect the impedance measuring functions.

The zero sequence detection algorithm, based on the zero sequence measuring quantities, a high value of voltage $3 \cdot U_0$ without the presence of the residual current $3 \cdot I_0$, is recommended for terminals used in directly or low impedance earthed networks.

1.2 Functionality

Zero sequence

The current and voltage measuring elements within one of the built-in digital signal processors continuously measure the currents and voltages in all three phases and calculate:

- The zero-sequence current 3·I0
- The zero-sequence voltage 3·U0

comparing them with their respective set values 3I0< and 3U0>.

Fourier’s recursive filter filters the current and voltage signals, and a separate trip counter prevents high overreaching of the measuring elements. The signal STZERO is set to 1, if the zero sequence measured voltage exceeds its set value 3U0> and if the zero sequence measured current does not exceed its pre-set value 3I0<.

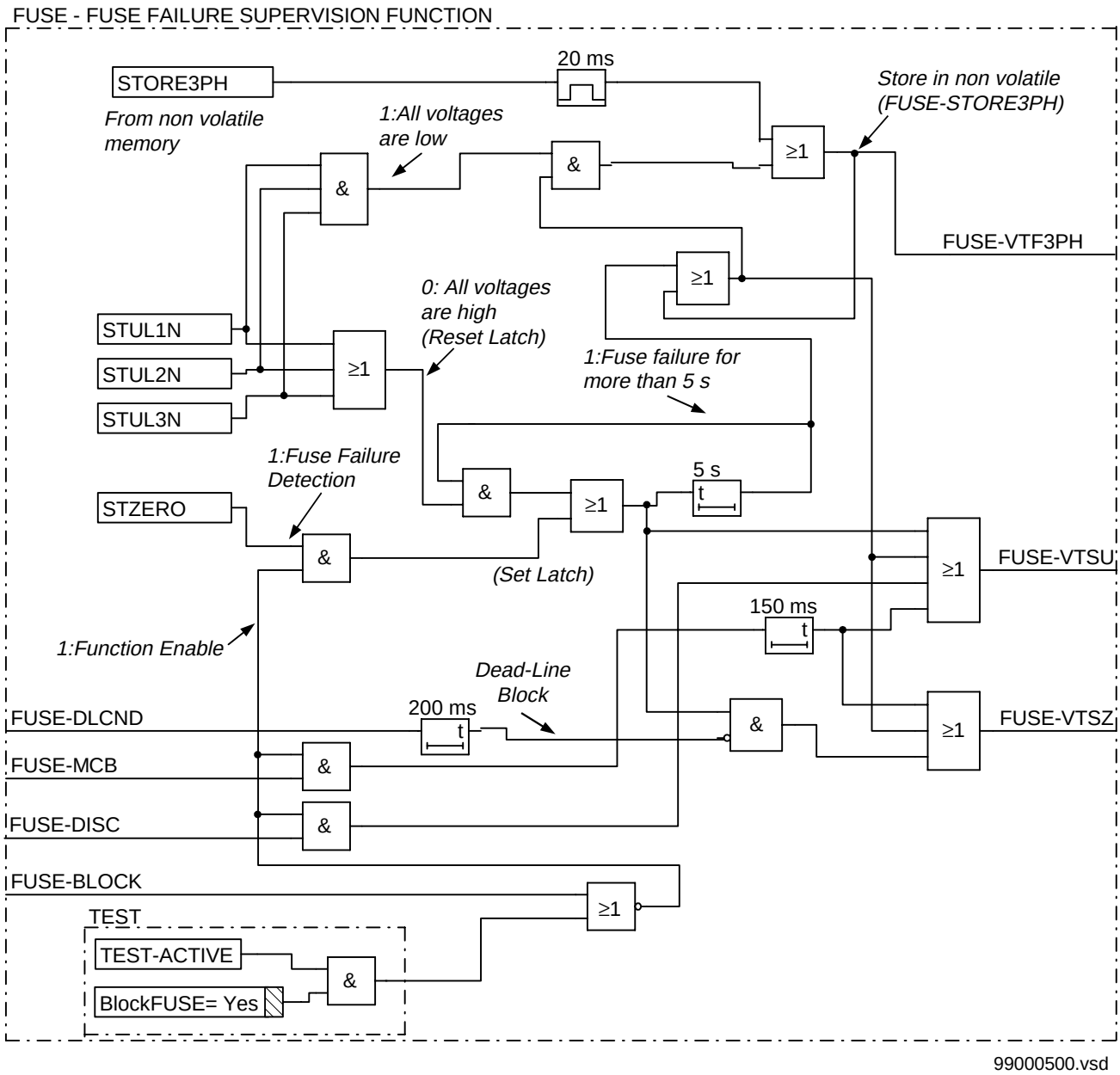

Figure 97: Simplified logic diagram for fuse failure supervisione function, zero sequence based

Logic

Signals STUL1N, STUL2N and STUL3N are related to phase to earth voltages and become 1 when the respective phase voltage is lower than the set value. The set value (U<) is chosen in the dead line detection function, that is always present in the terminal when the fuse failure supervision is present.

The fuse failure supervision function is disabled (blocked) if:

- The terminal is in TEST status (TEST-ACTIVE is high) and the function has been blocked from the HMI (BlockFUSE=Yes)
- The input signal FUSE-BLOCK is high

The FUSE-BLOCK signal is a general purpose blocking signal of the fuse failure supervision function. It can be connected to a binary input of the terminal in order to receive a block command from external devices or can be software connected to other internal functions of the terminal itself in order to receive a block command from internal functions. Through OR gate it can be connected to both binary inputs and internal function outputs.

Function input signal FUSE-MCB is to be connected via a terminal binary input to the N.C. auxiliary contact of the miniature circuit breaker protecting the VT secondary circuit.

Function input signal FUSE-DISC is to be connected via a terminal binary input to the N.C. auxiliary contact of the line disconnector.

The function output FUSE-VTSU can be used for blocking the voltage related measuring functions (undervoltage protection, synchrocheck etc.) except for the impedance protection.

Function output FUSE-VTSZ can be used for blocking the impedance protection function.

The FUSE-MCB signal sets the output signals FUSE-VTSU and FUSE-VTSZ in order to block all the voltage related functions when the MCB is open. The additional drop-off timer of 150 ms prolongs the presence of FUSE-MCB signal to prevent the unwanted operation of voltage dependent function due to non simultaneous closing of the main contacts of the miniature circuit breaker.

The FUSE-DISC signal sets the output signal FUSE-VTSU in order to block the voltage related functions when the line disconnector is open. The impedance protection function is not affected by the position of the line disconnector.

The function input signal FUSE-DLCND is related to the dead line condition detection. It has to be connected to the output signal of the dead line condition function DLD-STPH (dead phase condition detected). This signal is activated from the dead line condition function when the voltage and the current in at least one phase are below their respective setting values. It prevents the blocking of the impedance protection by a fuse failure detection during dead line condition (that occurs also during single pole auto-reclosing). The 200 ms drop-off timer prolongs the dead line condition after the line-energization in order to prevent the blocking of the impedance protection for unequal pole closing.

If a fuse failure condition is detected, the signal FUSE-VTSU is turned high, and if there is no dead line condition also FUSE-VTSZ is high. If the fuse failure condition remains for more then five seconds and at least one of the phases has a low phase to earth voltage, then the fuse failure condition is latched.

The output signal FUSE-VTF3PH is high if the fuse failure condition is detected for 5 seconds and all the three measured voltages are low (STUL1N = STUL2N = STUL3N = 1).

Fuse failure condition is unlatched when the normal voltage conditions are restored (STUL1N = STUL2N = STUL3N = 0).

Fuse failure condition is stored in the non volatile memory of the terminal. In the new start-up procedure the terminal checks the VTF3PH (STORE3PH) value in its non volatile memory and establishes the corresponding starting conditions.

1.3 Calculations

The operating value for the voltage check function (signals STUL1N, STUL2N, STUL3N) is the same as the operating value of the dead line detection function. The setting of the voltage minimum operating value U< occurs under the submenu:

Settings
Functions
Group n
DeadLineDet

Zero sequence function

The zero sequence voltages and currents always exist due to different non-symmetries in the primary system and differences in the current and voltage instrument transformers. The minimum value for the operation of the current and voltage measuring elements must always be set with a safety margin of 10 to 15%, depending on the system operating conditions.

Pay special attention to the dissymmetry of the measuring quantities when the function is used on longer untransposed lines, on multi circuit lines and so on.

Setting of zero sequence voltage 3U0>

The relay setting value 3U0> is given in percentage of the secondary base voltage value, U1b, associated to the voltage transformer input U1. If Us_{SEC} is the secondary setting value of the relay, then the value for 3U0> is given from equation 154.

$$3U0> = \frac{Us_{SEC}}{U1b} \cdot 100$$

(Equation 154)

Set this value under the setting menu:

Settings
Functions
Group n
FuseFailure

on the value 3U0>.

Setting of zero sequence current 3I0<

The relay setting value 3I0< is given in percentage of the secondary base current value, I1b, associated to the current transformer input I1. If Is_{SEC} is the secondary setting value of the relay, then the value for 3I0< is given from equation 155.

$$3I0< = \frac{Is_{SEC}}{I1b} \cdot 100$$

(Equation 155)

Set this value under the setting menu:

Settings
Functions
Group n
FuseFailure

on the value 3I0<.

Chapter 8 Control

About this chapter

This chapter describes the control functions.

1 Synchrocheck (SYN)

1.1 Application

Synchrocheck, general

The synchrocheck function is used for controlled closing of a circuit in an interconnected network. When used, the function gives an enable signal at satisfied voltage conditions across the breaker to be closed. When there is a parallel circuit established, the frequency is normally the same at the two sides of the open breaker. At power swings, e.g. after a line fault, an oscillating difference can appear. Across the open breaker, there can be a phase angle and a voltage amplitude difference due to voltage drop across the parallel circuit or circuits. The synchro-check function measures the difference between the U-line and the U-bus, regarding voltage (UDiff), phase angle (PhaseDiff), and frequency (FreqDiff). It operates and permits closing of the circuit breaker when the following conditions are simultaneously fulfilled:

- The voltages U-line and U-bus are higher than the set value for UHigh of the base voltage U1b.
- The differences in the voltage and phase angles are smaller than the set values of UDiff and PhaseDiff.
- The difference in frequency is less than the set value of FreqDiff. The bus frequency must also be within a range of +/-5 Hz from the rated frequency.

Note!

Phase-phase volage (100 V or 220 V) can not be connected directly to an individual input voltage transformer. The individual transformer is designed for phase-neutral voltage (U_r = 63.5 V or U_r = 127 V.

The function can be used as a condition to be fulfilled before the breaker is closed at manual closing and/or together with the auto-recloser function.

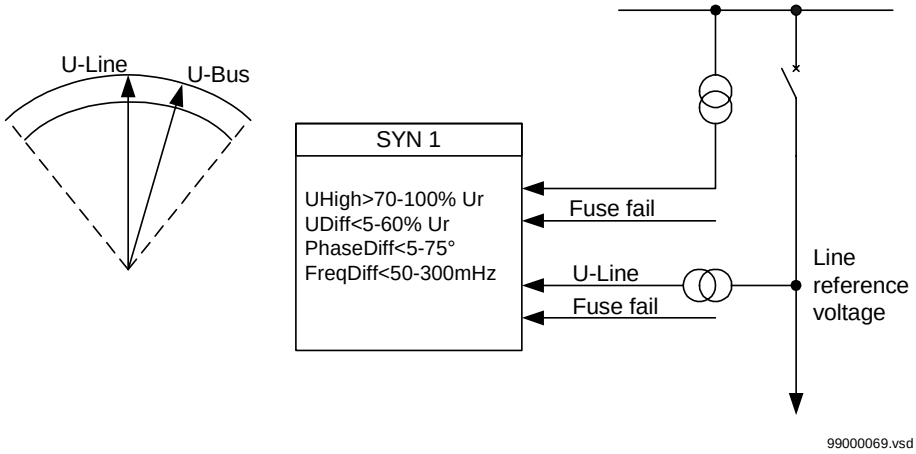

Figure 98: Synchrocheck.

Synchrocheck, single circuit breaker

The voltage circuits are arranged differently depending on the number of synchrocheck functions that are included in the terminal.

In terminals intended for one bay the U-line voltage reference phase is selected on the human-machine interface (HMI). The reference voltage can be phase-neutral L1, L2, L3 or phase-phase voltage L1-L2, L2-L3, L3-L1. The U-bus voltage must then be connected to the same phase or phases as are chosen on the HMI. Figure 99 shows the voltage connection.

In terminals intended for several bays, all voltage inputs are single phase circuits. The voltage can be selected for single phase or phase-to-phase measurement on the HMI. All voltage inputs must be connected to the same phase or phases.

The circuit breaker can be closed when the conditions for FreqDiff, PhaseDiff, and UDiff are fulfilled with the UHigh condition.

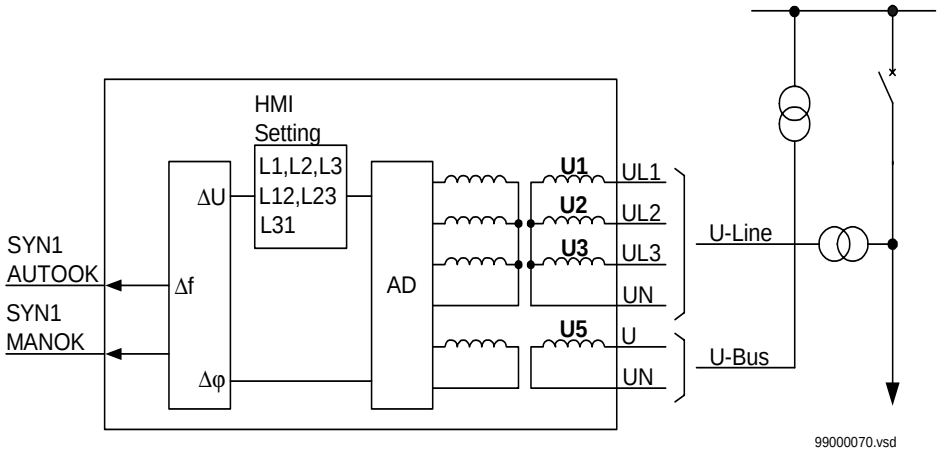

Figure 99: Connection of the synchrocheck function for one bay.

Energizing check, general

The energizing check is made when a disconnected line is to be connected to an energized section of a network, see figure 100. The check can also be set to allow energization of the busbar or in both directions.

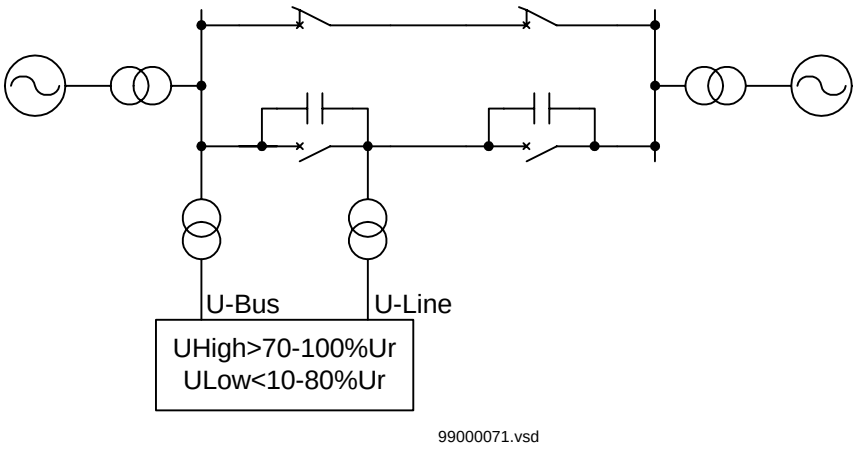

Figure 100: Principle for energizing check.

The voltage level considered to be a non-energized bus or line is set on the HMI. An energizing can occur — depending on:

- the set direction of the energizing function
- the set limit for energized (live - UHigh) condition
- the set limit for non-energized (dead - Ulow) condition

The equipment is considered energized if the voltage is above the set value UHigh (e.g. 80% of the base voltage), and non-energized if it is below the set value, ULow (e.g. 30% of the base voltage). The user can set the UHigh condition between 70-100% U1b and the ULow condition between 10-80% U1b.

A disconnected line can have a considerable potential due to, for instance, induction from a line running in parallel, or by being fed via the extinguishing capacitors in the circuit breakers. This voltage can be as high as 30% or more of the rated voltage of the line.

The energizing operation can be set to operate in either direction over the circuit breaker, or it can be permitted to operate in both directions. Use the AutoEnerg and ManEnerg HMI setting to select the energizing operation in:

- Both directions (Both)
- Dead line live bus (DLLB)
- Dead bus live line (DBLL)

The voltage check can also be set Off. A closing impulse is issued to the circuit breaker if one of the U-line or U-bus voltages is High and the other is Low, that is, when only one side is energized. The user can set AutoEnerg and ManEnerg to enable different conditions during automatic and manual closing of the circuit breaker.

In the manual mode it is also possible to allow closing when both sides of the breaker are dead. This is done by setting the parameter ManDBDL = “On” and ManEnerg to “DLLB”, “DBLL” or “Both”.

Voltage selection, single circuit breaker

The voltage selection function is used for the synchrocheck and energizing check functions. When the terminal is used in a double bus, the voltage that should be selected depends on the status of the breakers and/or disconnectors. By checking the status of the disconnectors and/or breakers auxiliary contacts, the terminal can select the right voltage for the synchrocheck and energizing check functions. Select the type of voltage selection from the synchrocheck, Uselection, SingleBus or DbleBus on the HMI. When using voltage selection, some extra binary inputs are required.

The configuration of internal signal inputs and outputs may be different for different busbar systems, and the actual configuration for the substation must be done during engineering of the terminal.

Voltage connection for a single bus and single bay

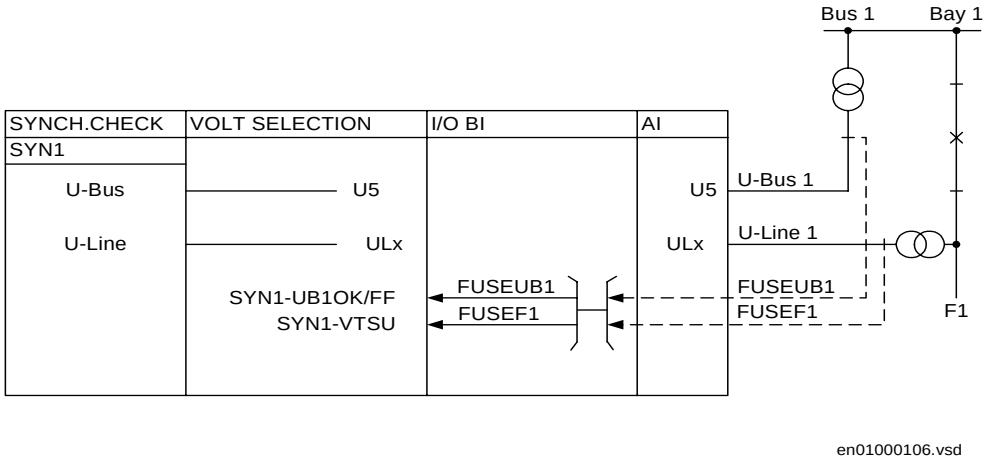

Figure 101: Voltage connection in a single busbar arrangement.

Single bus is selected on the HMI. Figure 101 shows the principle for the connection arrangement. One terminal unit is used for one bay. For the synchrocheck (SYN1) and energizing check function, there is one voltage transformer at each side of the circuit breaker. The voltage transformer circuit connections are straight forward, no special voltage selection is needed.

For the synchrocheck and energizing check, the voltage from Bus 1 (U-Bus 1) is connected to the single phase analogue input (U5) on the terminal unit.

The line voltage (U-line 1) is connected as a three-phase voltage to the analog inputs UL1, UL2, UL3 (ULx).

Fuse failure and Voltage OK signals, single bus and single bay

The external fuse-failure signals or signals from a tripped fuse switch/MCB are connected to binary inputs that are configured to inputs of the synchrocheck functions in the terminal. There are two alternative connection possibilities. Inputs named OK must be supplied if the voltage circuit is healthy. Inputs named FF must be supplied if the voltage circuit is faulty.

The SYN1-UB1OK and SYN1-UB1FF inputs are related to the busbar voltage. Configure them to the binary inputs that indicate the status of the external fuse failure of the busbar voltage. The SYN1-VTSU input is related to the line voltage.

The user can use the FUSE-VTSU signal from the built-in optional fuse-failure function as an alternative to the external fuse-failure signals.

In case of a fuse failure, the energizing check (dead line-check) is blocked via the inputs (SYN1-UB1OK/FF or SYN1-VTSU).

Voltage selection for a double bus and single bay

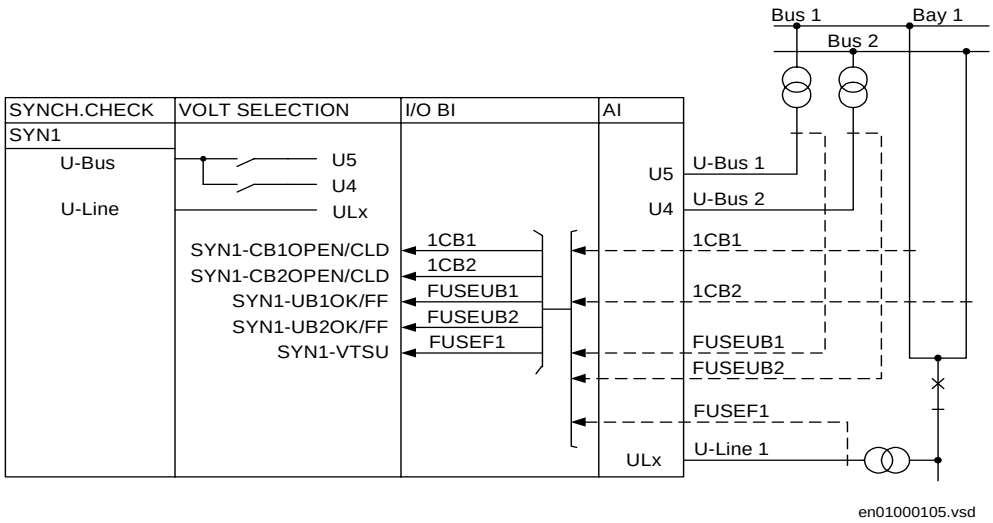

Figure 102: Voltage selection in a double bus arrangement.

Select DbleBus on the HMI. Figure 102 shows the principle for the connection arrangement. One terminal is used for one bay. For the synchrocheck (SYN1) and energizing check function, the voltages on the two busbars are selected by the voltage selection in the terminal unit. The bus voltage from Bus 1 is fed to the U5 analog single-phase input, and the bus voltage from Bus 2 is fed to the U4 analog single-phase input. The line voltage transformers are connected as a three-phase voltage UL1, UL2, UL3 (ULx) to the input U-line 1.

The selection of the bus voltage is made by checking the position of the disconnectors' auxiliary contacts connected via binary inputs of the voltage selection logic inputs, SYN1-CB1OPEN (Disconnector section 1 open), SYN1-CB1CLD (Disconnector section 1 closed) and SYN1-CB2OPEN (Disconnector section 2 open), SYN1-CB2CLD (Disconnector section 2 closed).

Fuse failure and Voltage OK signals, double bus and single bay

The external fuse-failure signals or signals from a tripped fuse switch/MCB are connected to binary inputs configured to inputs of the synchro-check functions in the terminal. There are two alternative connection possibilities. Inputs named OK must be supplied if the voltage circuit is healthy. Inputs named FF must be supplied if the voltage circuit is faulty.

The SYN1-UB1(2)OK and SYN1-UB1(2)FF inputs are related to each busbar voltage. The SYN1-VTSU input is related to the line voltage. Configure them to the binary inputs that indicate the status of the external fuse failure of the busbar respectively the line voltage. Only the fuse failure of a selected voltage causes a blocking of the relevant energizing check unit.

The user can use the FUSE-VTSU signal from the built-in optional selectable fuse-failure function as an alternative to the external fuse-failure signals.

In case of a fuse failure, the energizing check (dead line-check) is blocked via the inputs (SYN1-UB1OK/FF, SYN1-UB2OK/FF or SYN1-VTSU).

1.2 Functionality

Single circuit breaker

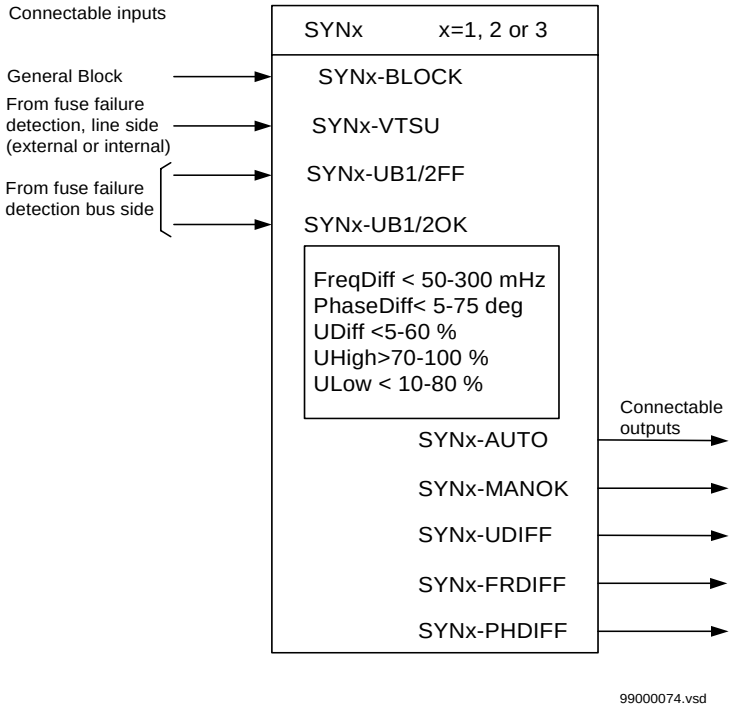

Figure 103: Input and output signals.

Synchrocheck

Description of input and output signals for the synchrocheck function.

Input signals	Description
SYNx-BLOCK	General block input from any external condition, that should block the synchrocheck.
SYNx-VTSU	The synchrocheck function cooperates with the FUSE-VTSU connected signal, which is the built-in optional fuse failure detection. It can also be connected to external condition for fuse failure. This is a blocking condition for the energizing function.
SYNx-UB1FF	External fuse failure input from busbar voltage Bus 1 (U5). This signal can come from a tripped fuse switch (MCB) on the secondary side of the voltage transformer. In case of a fuse failure the energizing check is blocked.
SYNx-UB1OK	No external voltage fuse failure (U5). Inverted signal.
SYNx-UB2FF	External fuse failure input from busbar voltage Bus 2 (U4). This signal can come from a tripped fuse switch (MCB) on the secondary side of the voltage transformer. In case of a fuse failure the energizing check is blocked.
SYNx-UB2OK	No external voltage fuse failure (U4). Inverted signal.

Output signals	Description
SYNx-AUTOOK	Synchrocheck/energizing OK. The output signal is high when the synchrocheck conditions set on the HMI are fulfilled. It can also include the energizing condition, if selected. The signal can be used to release the auto-recloser before closing attempt of the circuit breaker. It can also be used as a free signal.
SYNx-MANOK	Same as above but with alternative settings of the direction for energizing to be used during manual closing of the circuit breaker.
SYNx-UDIFF	Difference in voltage is less than the set difference limit.
SYNx-FRDIFF	Difference in frequency is less than the set difference limit.
SYNx-PHDIFF	Difference in phase angle is less than the set difference limit.

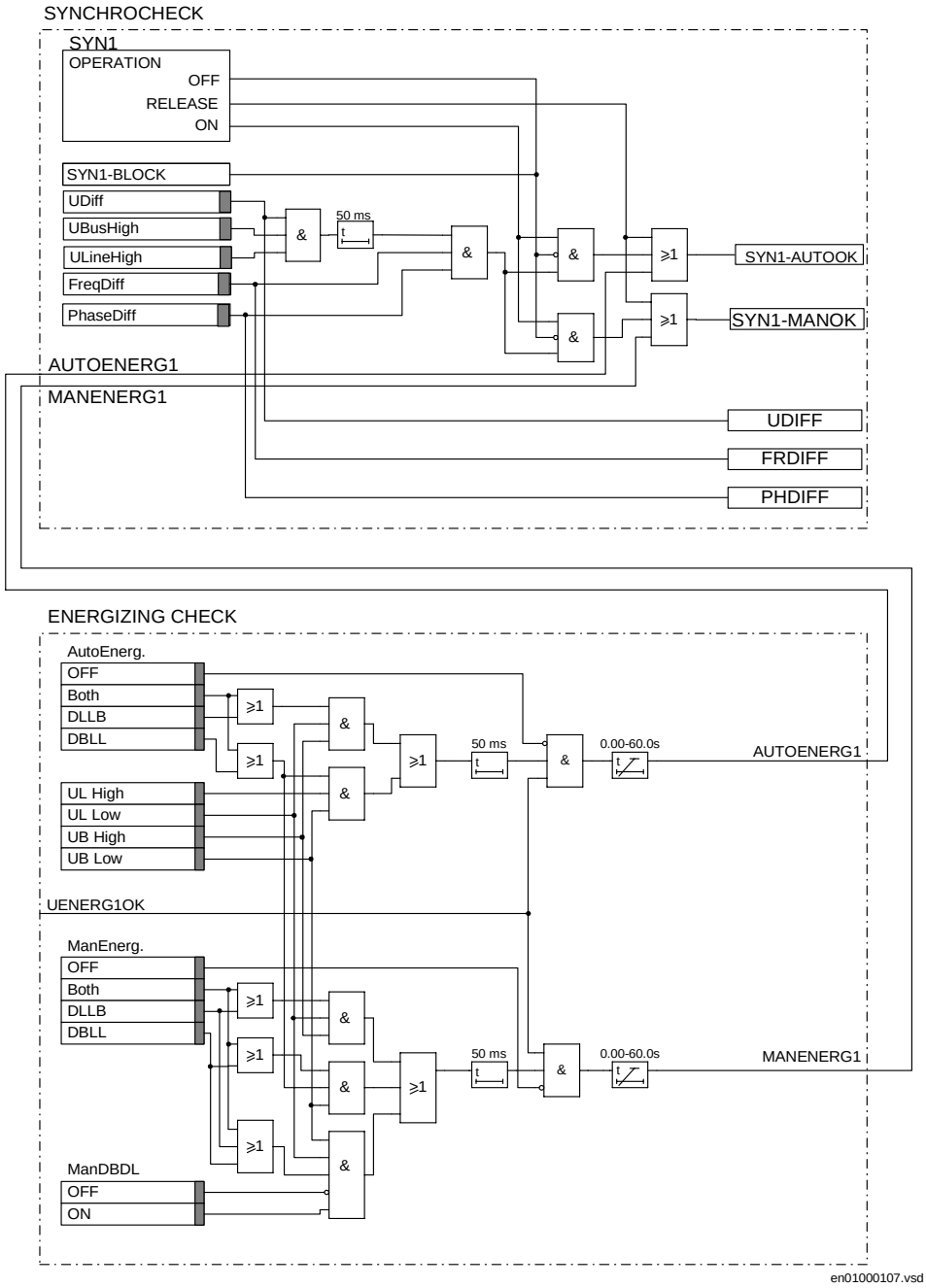

Figure 104: Simplified logic diagram - Synchrocheck and energizing check. The internal signal UENERG1OK refers to the voltage selection logic.

Voltage selection

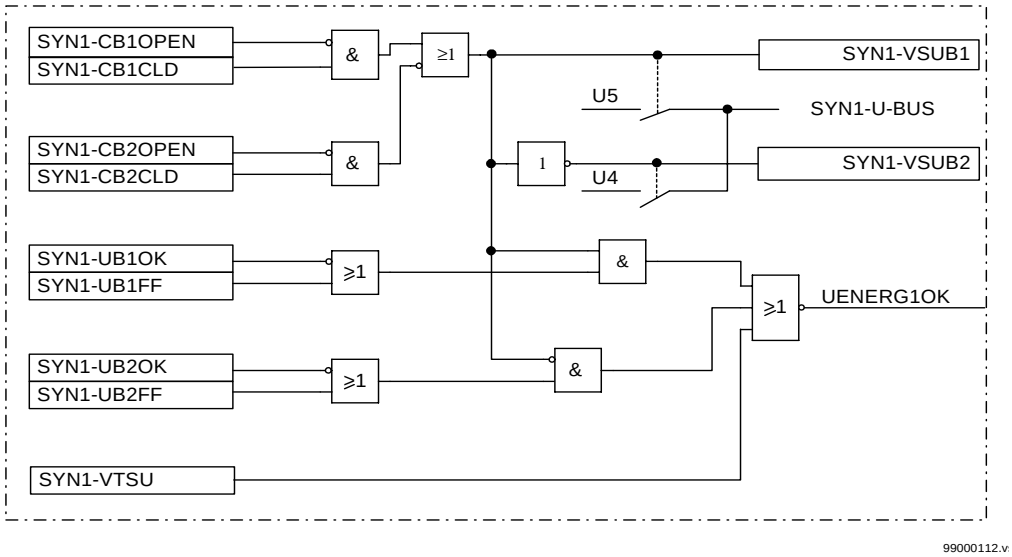

Figure 105: Voltage selection logic in a double bus, single breaker arrangement. In case of three bay arrangement the 1 in SYN1 and UENERG1OK are replaced by 2 and 3 in the logic.

Description of the input and output signals shown in the above simplified logic diagrams for voltage selection:

Input signal	Description
SYNx-CB1OPEN	Disconnector section of Bay x open. Connected to the auxiliary contacts of a disconnector section in a double-bus, single- breaker arrangement, to inform the voltage selection about the positions.
SYNx-CB1CLD	Disconnector section of Bay x closed. Connected to the auxiliary contacts of a disconnector section in a double-bus, single-breaker arrangement to inform the voltage selection about the positions.
SYNx-CB2OPEN	Same as above but for disconnector section 2.
SYNx-CB2CLD	Same as above but for disconnector section 2.
SYNx-UB1FF	External fuse failure input from busbar voltage Bus 1 (U5). This signal can come from a tripped fuse switch (MCB) on the secondary side of the voltage transformer. In case of a fuse failure, the energizing check is blocked.

Input signal	Description
SYNx-UB1OK	No external voltage fuse failure (U5). Inverted signal.
SYNx-UB2FF	External fuse failure input from busbar voltage Bus 2 (U4). This signal can come from a tripped fuse switch (MCB) on the secondary side of the voltage transformer. In case of fuse failure, the energizing check is blocked.
SYNx-UB2OK	No external voltage fuse failure (U4). Inverted signal.
SYNx-VTSU	Internal fuse failure detection or configured to a binary input indicating external fuse failure of the UL1, UL2, UL3 line-side voltage. Blocks the energizing function.

Output signals	Description
SYNx-VSUB1	Signal for indication of voltage selection from Bus 1 voltage.
SYNx-VSUB2	Signal for indication of voltage selection from Bus 1 voltage.

1.3 Calculations

The setting parameters are accessible through the HMI. The parameters for the synchrocheck function are found in the HMI tree under:

Settings
Functions
Group n
SynchroCheck
SynchroCheck n (n=1-3)

(The number of Synchro Check functions is dependent of the version)

Comments regarding settings.

Operation
Off/Release/On

Off	The synchrocheck function is disabled and the output is low.
Release	There are fixed, high output signals SYNx-AUTOOK = 1 and SYNx-MANOK = 1.
On	The function is in service and the output signal depends on the input conditions.

Input phase

The measuring phase of the UL1, UL2, UL3 line voltage, which can be of a single-phase (phase-neutral) or two-phases (phase-phase). (Only available in terminals intended for one bay).

UMeasure

Selection of single-phase (phase-neutral) or two-phase (phase-phase) measurement.(Only available in terminals intended for several bays).

PhaseShift

This setting is used to compensate for a phase shift caused by a line transformer between the two measurement points for UBus and ULine. The set value is added to the measured phase difference. The bus voltage is reference voltage.

URatio

The URatio is defined as URatio=UBus/ULine. A typical use of the setting is to compensate for the voltage difference caused if one wishes to connect the UBus phase-phase and ULine phase-neutral. The “Input phase”-setting should then be set to phase-phase and the “URatio”-setting to sqr3=1.732. This setting scales up the line voltage to equal level with the bus voltage.

USelection

Selection of single or double bus voltage-selection logic.

AutoEnerg and ManEnerg

Two different settings can be used for automatic and manual closing of the circuit breaker.

Off	The energizing function is disabled
DLLB	The line voltage U-line is low, below (10-80% U1b) and the bus voltage U-bus is high, above (70-100% U1b).
DBLL	The bus voltage U-bus is low, below (10-80% U1b) and the line voltage U-line is high, above (70-100% U1b).

Both	Energizing can be done in both directions, DLLB or DBLL.
tAutoEnerg	The required consecutive time of fulfillment of the energizing condition to achieve SYN1-AUTOOK.
tManEnerg	The required consecutive time of fulfillment of the energizing condition to achieve SYN1-MANOK.

ManDBDL

If the parameter is set to “On”, closing is enabled when Both U-Line and U-bus are below ULow and ManEnerg is set to “DLLB”, “DBLL” or “Both”.

2 Automatic reclosing function (AR)

2.1 Application

Automatic reclosing (AR) is a well-established method to restore the service of a power line after a transient line fault. The majority of line faults are flashover arcs, which are transient by nature. When the power line is switched off by operation of line protection and line breakers, the arc de-ionises and recovers voltage withstand at a somewhat variable rate. So a certain line dead time is needed. But then line service can resume by the auto-reclosing of the line breakers. Select the length of the dead time to enable good probability of fault arc de-ionisation and successful reclosing.

For the individual line breakers and auto-reclosing equipment, the Auto-reclose open time (AR open time) expression is used. At simultaneous tripping and reclosing at the two line ends, Auto-reclose open time equals approximaltely the dead time of the line. Otherwise these two times may differ.

In case of a permanent fault, the line protection trips again at reclosing to clear the fault.

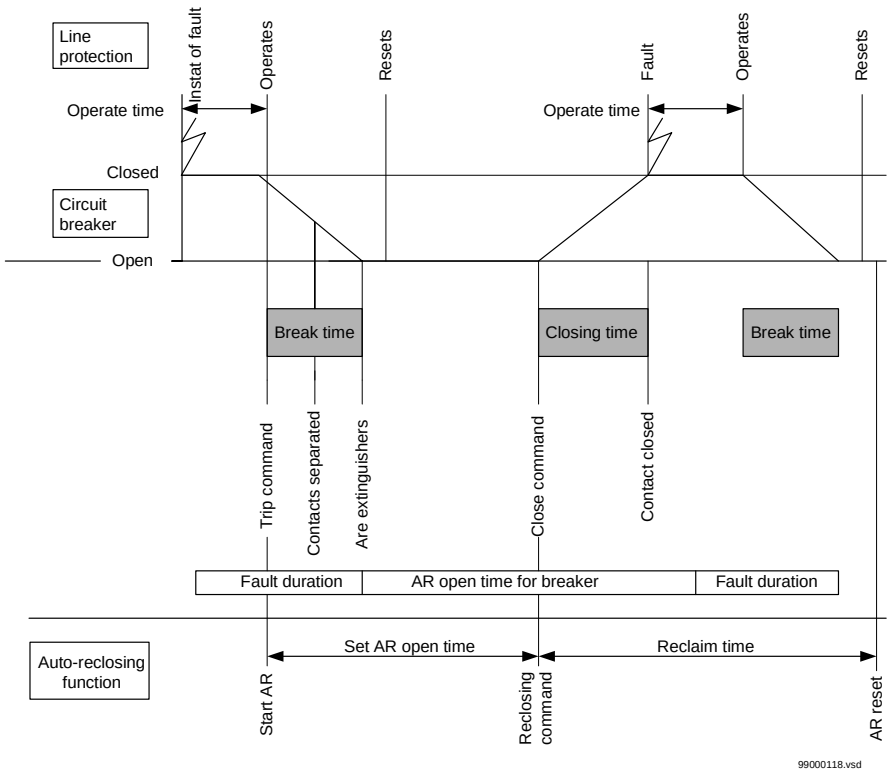

Figure 106: Single-shot auto-reclosing at a permanent fault

In a bay with one circuit breaker only one terminal is normally provided with one AR function.

Single-phase tripping and single-phase reclosing is a way to limit the effect of a single-phase line fault to system operation. Especially at higher voltages, the majority of line faults are of the single-phase type. The method is of particular value to maintain system stability in systems with limited meshing or parallel routing. It requires individual operation of each phase of the breakers, which is common at the higher transmission voltages.

A somewhat longer dead time may be required at single-phase reclosing compared to high-speed three-phase reclosing, due to influence on the fault arc from voltage and current of the non-tripped phases.

There is also a possibility to trip and reclose two of the circuit breaker poles, in case of faults when two out of the three phases are involved and parallel lines are in service. This type of faults is less common compared to single phase to earth faults, but more common than three phase faults.

In order to maximize the availability of the power system there is a possibility to chose single pole tripping and auto-reclosing at single phase faults, two pole tripping and auto-reclosing at faults involving two phases and three pole tripping and auto-reclosing at three phase faults.

During the single pole open time there will be an equivalent “series”-fault in the system. As a consequence there will be a flow of zero sequence current. Therefor the residual current protections must be co-ordinated with the single pole tripping and auto-reclosing.

The reclosing function can be selected to perform single-phase, two-phase and/or three-phase reclosing from six single-shot to multiple-shot reclosing programs. The three-phase auto-reclose open time can be set to give either high-speed auto-reclosing (HSAR) or delayed auto-reclosing (DAR). In the reclosing programs the delayed auto-reclosing (DAR) is always a three pole trip and reclosing, even if the first high-speed reclosing is a single pole action.

2.2 Functionality

The AR function is a logical function built up from logical elements. It operates in conjunction with the trip output signals from the line protection functions, the OK to close output signals from the synchrocheck and energizing check function, and binary input signals (for circuit breaker position/status, or from other external protection functions).

In the AR logic a number of parameters can be set to adjust the auto-reclosing function to the desired requirements. Examples are:

- Number of AR attempts
- AR programs
- Open times for different AR attempts

Start and control of the auto-reclosing

The automatic operation of the auto-reclosing function is controlled by the parameter *Operation* and the input signals as described above. When it is on, the AR01-SETON output is high (active). See Function block diagrams.

The auto-reclosing function is activated at a protection trip by the AR01-START input signal. At repeated trips, this signal is activated again to make the reclosing program continue.

There are a number of conditions for the start to be accepted and a new cycle started. After these checks, the start signal is latched in and the *Started* state signal is activated. It can be interrupted by certain events.

Extended AR open time, shot 1

The purpose of this function is to adapt the length of the AR Open time to the possibility of non-simultaneous tripping at the two line ends. If a permissive communication scheme is used and the permissive communication channel (for example, PLC, power-line carrier) is out of service at the fault, there is a risk of sequential non-simultaneous tripping. To ensure a sufficient line dead time, the AR open time is extended by 0.4 s. The input signal AR01-PLCLOST is checked at tripping. See Function block diagrams. Select this function (or not) by setting the Extended t1 parameter to On (or Off).

Long trip signal

During normal circumstances, the trip command resets quickly due to fault clearing. The user can set a maximum trip pulse duration by tTrip. At a longer trip signal, the AR open dead time is extended by Extend_t1. If the Extended t1 = Off, a long trip signal interrupts the reclosing sequence in the same way as AR01-INHIBIT.

Reclosing programs

The reclosing programs can be performed with up to maximum four reclosing attempts (shots), selectable with the NoOfReclosing parameter. The first program is used at pure 3-phase trips of breakers and the other programs are used at 1-, 2- or 3-phase trips of breakers.

3ph

3-phase reclosing, one to four attempts (NoOfReclosing parameter). The output AR01-P3P is always high (=1).

A trip operation is made as a three-phase trip at all types of fault. The reclosing is as a three-phase reclosing in program 1/2/3ph, described below.

1/2/3ph

1-phase, 2-phase or 3-phase reclosing in the first shot.

For the example, one-shot reclosing for 1-phase, 2-phase or 3-phase, see Figures in Function block diagrams. Here, the AR function is assumed to be On and Ready. The breaker is closed and the operation gear ready (manoeuvre spring charged etc.). Only the 1-phase and 3-phase cases are described.

AR01-START is received and sealed-in at operation of the line protection. The AR01-READY output is reset (Ready for a new AR cycle).

If AR01-TR2P (2-phase trip) is low and AR01-TR3P (3-phase trip) is:

low, the timer for 1-phase reclosing open time t1 1Ph is started and the AR01-1PT1 output (auto-reclosing 1-phase, shot 1, in progress) is activated. It can be used to suppress Pole disagreement and Earth-fault protection during the 1-phase open interval.

high, the timer for 3-phase AR open time, t1, is started (instead of t1 1Ph) and AR01-T1 is set (auto-reclosing 3-phase, shot 1, in progress). While either t1 1Ph or t1 is running, the output AR01-INPROGR is activated.

Immediately after the start-up of the reclosing and tripping of the breaker, the input (see Function block diagrams) AR01-CBCLOSED is low (possibly also AR01-CBREADY at type OCO). The AR Open-time timer, t1 1Ph or t1, keeps on running.

At the end of the set AR open time, t1 1Ph or t1, the respective SPTO or TPTO (single-phase or three-phase AR time-out, see Function block diagrams) is activated and goes on to the output module for further checks and to give a closing command to the circuit breaker.

At any kind of trip, the operation is as already described, program 1/2/3ph. If the first reclosing attempt fails, a 3-phase trip will be issued and 3-phase reclosings can follow, if selected. Maximum three additional attempts can be done (according to the NoOfReclosing parameter).

1/2ph

1-phase or 2-phase reclosing in the first shot.

At 1-phase or 2-phase trip, the operation is as in above described example, program **1/2/3ph**. If the first reclosing attempt fails, a 3-phase trip will be issued and 3-phase reclosings can follow, if selected. Maximum three additional attempts can be done (according to the NoOfReclosing parameter).

At 3-phase trip, TR2P low and TR3P high, the AR will be blocked and no reclosing takes place.

1ph + 1*2ph

1-phase or 2-phase reclosing in the first shot.

At 1-phase trip (TR2P low and TR3P low), the operation is as in above described example, program 1/2/3ph. If the first reclosing attempt fails, a 3-phase trip will be issued and 3-phase reclosings can follow, if selected. Maximum three additional attempts can be done (according to the NoOfReclosing parameter).

At 2-phase trip (TR2P high and TR3P low), the operation is similar as above. But, if the first reclosing attempt fails, a 3-phase trip will be issued and the AR will be blocked. No more attempts take place!

At 3-phase trip, TR2P low and TR3P high, the AR will be blocked and no reclosing takes place.

1/2ph + 1*3ph

1-phase, 2-phase or 3-phase reclosing in the first shot.

At 1-phase or 2-phase trip, the operation is as described above. If the first reclosing attempt fails, a 3-phase trip will be issued and 3-phase reclosings can follow, if selected. Maximum three additional attempts can be done (according to the NoOfReclosing parameter).

At 3-phase trip, the operation is similar as above. But, if the first reclosing attempt fails, a 3-phase trip will be issued and the AR will be blocked. No more attempts take place!

1ph + 1*2/3ph

1-phase, 2-phase or 3-phase reclosing in the first shot.

At 1-phase trip, the operation is as described above. If the first reclosing attempt fails, a 3-phase trip will be issued and 3-phase reclosings can follow, if selected. Maximum three additional attempts can be done (according to the NoOfReclosing parameter).

At 2-phase or 3-phase trip, the operation is similar as above. But, if the first reclosing attempt fails, a 3-phase trip will be issued and the AR will be blocked. No more attempts take place!

Table 11: Type of reclosing for different programs

Program	1st attempt	2-4th attempt
3ph	3ph	3ph
1/2/3ph	1ph	3ph
	2ph	3ph
	3ph	3ph
1/2ph	1ph	3ph

Program	1st attempt	2-4th attempt
	2ph	3ph
	No 3ph reclosing	No 3ph reclosing
1ph + 1*2ph	1ph	3ph
	2ph	No
	No 3ph reclosing	No 3ph reclosing
1/2ph + 1*3ph	1ph	3ph
	2ph	3ph
	3ph	No
1ph + 1*2/3ph	1ph	3ph
	2ph	No
	3ph	No

Blocking of a new reclosing cycle

A new start of a reclosing cycle is blocked for the reclaim time after the selected number of reclosing attempts are performed.

Reclosing checks and Reclaim timer

An AR open-time time-out signal is received from a program module. At three-phase reclosing, a synchro-check and/or energising check or voltage check can be used. It is possible to use an internal or an external synchro-check function, configured to AR01-SYNC. If a reclosing without check is preferred, configure the input AR01-SYNC to FIXD-ON (set to 1).

Another possibility is to set the output from the internal synchro-check function to a permanently active signal. Set Operation = Release in the synchro-check function. Then AR01-SYNC is configured to SYNx-AUTOOK.

At confirmation from the synchro-check or if the reclosing is of single-phase type, the signal passes on.

At AR01-CBREADY signal of the Close-Open (CO) type, it is checked that this signal is present to allow a reclosing.

The synchrocheck and energizing check must be fulfilled within a certain period of time, tSync. If it does not, or if the other conditions are not fulfilled, the reclosing is interrupted and blocked.

The Reclaim-timer defines a period from the issue of a reclosing command, after which the reclosing function is reset. Should a new trip occur within this time, it is treated as a continuation of the first fault. When a closing command is given (Pulse AR), the reclaim timer is started.

There is an AR State Control, see Function block diagrams, to track the actual state in the reclosing sequence.

Pulsing of CB closing command

The circuit breaker closing command, AR01-CLOSECB, is made as a pulse with a duration, set by the tPulse parameter. For circuit breakers without an anti-pumping function, the closing-pulse-cutting described below can be used. It is selected by means of the CutPulse parameter (set to On). In case of a new trip pulse, the closing pulse will be cut (interrupted). But the minimum length of the closing pulse is always 50 ms.

At the issue of a reclosing command, the associated reclosing operation counter is also incremented. There is a counter for each type of reclosing and one for the total number of reclosings. See Function block diagrams.

Transient fault

After the reclosing command, the reclaim timer keeps running for the set time. If no tripping occurs within this time, tReclaim, the auto-reclosing function will be reset. The circuit breaker remains closed and the operating gear ready (manoeuvre spring is recharged). AR01-CBCLOSED = 1 and AR01-CBREADY = 1.

After the reclaim time, the AR state control resets to original rest state, with AR01-SETON = 1, AR01-READY = 1 and AR01-P1P = 1 (depending on the selected program). The other AR01 outputs = 0.

Unsuccessful signal

Normally the signal AR01-UNSUC appears when a new start is received after the last reclosing attempt has been made. See Function block diagrams. It can be programmed to appear at any stage of a reclosing sequence by setting the parameter *UnsucMode* = On. The UNSUC signal is attained after the time tUnsuc.

Permanent fault

If a new trip takes place after a reclosing attempt and a new AR01-START or AR01-TRSOTF signal appears, the AR01-UNSUC (Reclosing unsuccessful) is activated. The timers for the first reclosing attempt (t1 1Ph, t1 2Ph and t1) cannot be started.

Depending on the PulseCut parameter setting, the closing command may be shortened at the second trip command.

After time-out of the reclaim timer, the auto reclosing function resets, but the circuit breaker remains open (AR01-CBCLOSED = 0, AR01-CBREADY = 1). Thus the reclosing function is not ready for a new reclosing cycle. See Function block diagrams and Sequence examples.

Automatic confirmation of programmed reclosing attempts

The auto-recloser can be programmed to continue with reclosing attempts two to four (if selected) even if the start signals are not received from the protection functions, but the breaker is still not closed. See figure in Function block diagrams. This is done by setting the parameter *AutoCont* = On and the wait time *tAutoWait* to desired length.

2.3 Calculations

2.3.1 Configuration and setting

The signals are configured in the CAP 531 configuration tool.

The parameters for the auto-reclosing function are set through the local HMI at:

Settings
Functions
Group n
AutoRecloser
AutoRecloser n

Recommendations for input signals

See figure 107 and the default configuration for examples.

AR01-START

Should be connected to the protection function trip output which shall start the auto-recloser. It can also be connected to a binary input for start from an external contact. A logical OR gate can be used to multiply the number of start sources.

AR01-ON and AR01-OFF

May be connected to binary inputs for external control.

AR01-INHIBIT

Can be connected to binary inputs, to block the AR from a certain protection, such as a line connected shunt reactor, transfer trip receive or back-up protection or breaker-failure protection.

AR01-CBCLOSED and AR01-CBREADY

Must be connected to binary inputs, for pick-up of the breaker signals. If the external signals are of Breaker-not-ready type, uncharged etc., an inverter can be configured before CBREADY.

AR01-SYNC

Is connected to the internal synchro-check function if required. It can also be connected to a binary input. If neither internal nor external synchronising or energising check (dead line check) is required, it can be connected to a permanent 1 (high), by connection to FIXD-ON.

AR01-PLCLOST

Can be connected to a binary input, when required.

AR01-TRSOTF

Can be connected to the internal line protection, distance protection, trip switch-onto-fault.

AR01-STTHOL

Start of thermal overload protection signal. Can be connected to OVLD-TRIP to block the AR at overload.

AR01-TR2P and AR01-TR3P

Are connected to the function block TRIP or to binary inputs. The protection functions that give two-phase or three-phase trips are supposed to be routed via that function.

Other

The other input signals can be connected as required.

Recommendations for output signals

See figure 107 and the default configuration for examples.

AR01-READY

Can be connected to the Zone extension of a line protection. It can also be used for indication, if required.

AR01-1PT1 and 2PT1

1-phase and 2-phase reclosing in progress is used to temporarily block an Earth-fault protection and/or a Pole disagreement function during the 1-phase or 2-phase open intervals.

AR01-CLOSECB

Connect to a binary output relay for circuit breaker closing command.

AR01-P3P

Prepare 3-phase trip: Connect to TRIP-P3PTR.

AR01-P1P

Permit 1-phase trip: Can be connected to a binary output for connection to external protection or trip relays. In case of total loss of auxiliary voltage, the output relay drops and does not allow 1-phase trip. If needed to invert the signal, it can be made by a breaking contact of the output relay.

Other

The other output signals can be connected for indication, disturbance recording etc., as required.

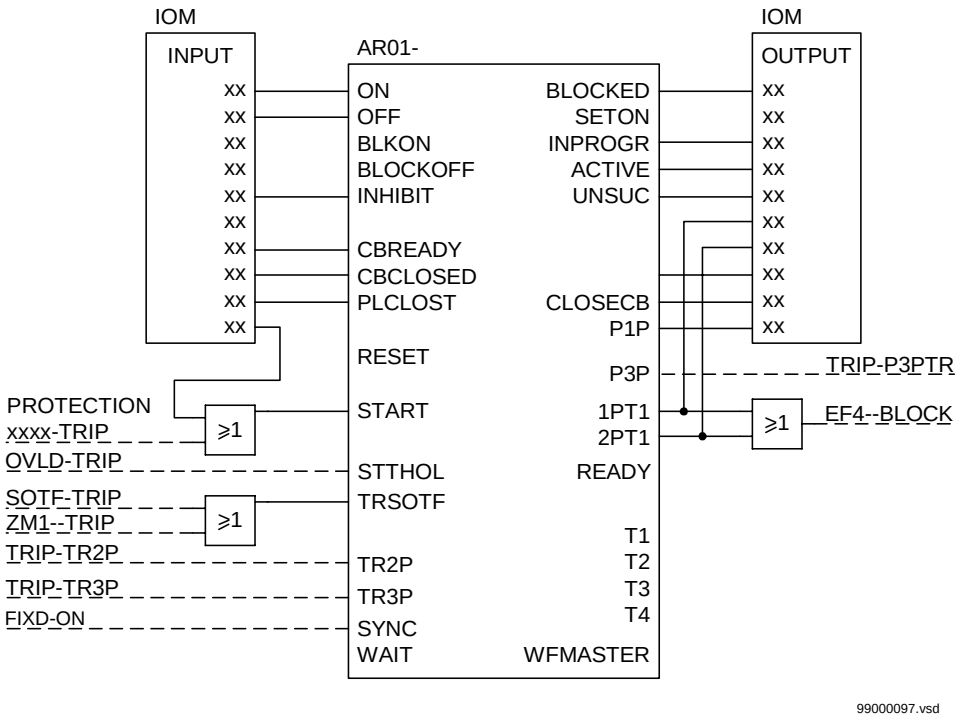

Figure 107: Recommendations for I/O-signal connections.

Recommendations for multi-breaker arrangement

Sequential reclosing at multi-breaker arrangement is achieved by giving the two line breakers different priorities. Refer to figure 108. At single breaker application, *Priority* is set to *No*, and this has no influence on the function. The signal *Started* is sent to the next function module. At double breaker and similar applications, *Priority* is set *High* for the Master terminal and *Priority = Low* for the Slave.

While reclosing is in progress in the master, it issues the signal -WFMASTER. A reset delay ensures that the -WAIT signal is kept high for the breaker closing time. After an unsuccessful reclosing, it is also maintained by the signal -UNSUC. For the slave terminal, the input signal -WAIT holds back a reclosing operation. A time *tWait* sets a maximum waiting time for the reset of the Wait signal. At time-out, it interrupts the reclosing cycle by a WM-INH, wait for master inhibit, signal.

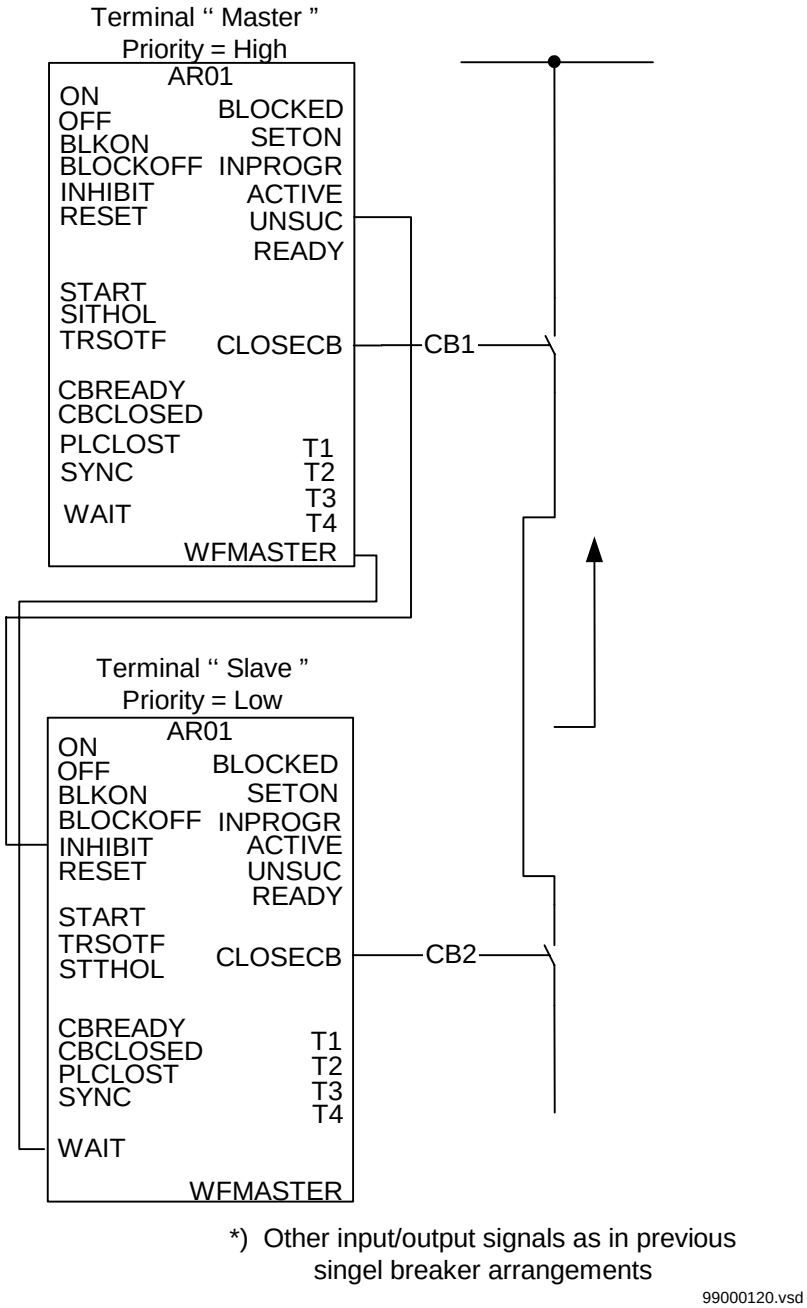

Figure 108: Additional input and output signals at multi breaker arrangement

Settings

Number of reclosing attempts: 1 to 4 attempts can be chosen. In most cases 1 attempt is sufficient as the majority of arcing faults will cease after the first reclosing shot. In power systems with many faults caused by other phenomena than lightning, for example wind, it can be motivated with more than one reclosing attempt.

There are six different possibilities in the selection of reclosing programs. What type of first shot reclosing shall be made, and for which types of faults? In completely meshed power systems it is often acceptable to use three pole auto-reclosing for all fault types, as first shot. In power systems with few parallel paths single pole auto-reclosing should be considered, in order to avoid reclosing in a phase opposition situation. In such systems auto-reclosing should be allowed for single phase faults only. It must be remembered that there will be zero sequence current flow in the power system during the single pole reclosing open time.

If a permissive channel is used between the line ends, and the availability of the communication channel is considered to be low, extended dead time in case of loss of the channel should be used.

Due to the secondary arc at single pole trip and auto-reclosing, the extinguishing time for the arc will be longer than for three pole trip and auto-reclosing. Typical required dead time for single pole trip and reclosing: 800 ms. Typical required dead time for three pole trip and reclosing: 400 ms. Different local phenomena, such as moisture, salt, pollution, etc. can influence the required dead time. Different open time for first auto-reclosing shot can be chosen for single pole (t1 1Ph), two pole (t1 2PH) and three pole (t1).

The open time for the three pole delayed auto-reclosing shots can be set individually (t2, t3 and t4). This setting can in some cases be restricted by national regulations.

In case of reclosing based on synchrocheck a maximum wait time (tSync) can be set. If the synchrocheck does not allow reclosing within this set time there will be no autoreclosing. This setting must be matched against the setting of the synchrocheck function. The operate time of the synchrocheck is mainly dependent on the setting angle difference. A typical operation time is about 200 ms. If the system will start to oscillate during the dead time, there can be some time before the synchronising quantities can be accepted for reclosing. This can be checked by means of dynamic simulations. As a base recommendation tSync can be set to 2.0 s.

The breaker closing pulse length (tPulse) can be chosen with some margin longer that the shortest allowed pulse for the breaker (see breaker data).

The tReclaim setting must be chosen so that all autoreclosing shots can be completed.

The setting tTrip is used for blocking of autoreclosing in case of long trip duration. This can be the consequence of an unwanted permanent trip signal or a breaker failure.

In case of two or more autoreclosing modules only one shall be chosen as maser (priority high). The others should have priority low. In case of one breaker only none priority is chosen.

Chapter 9 Logic

About this chapter

This chapter describes the logic functions.

1 Trip logic (TR)

1.1 Application

All trip signals from the different protection functions shall be routed through the trip logic. In its most simple alternative the logic will only link the trip signal and assure a sufficient duration of the trip signal.

The tripping logic in REx 5xx protection, control and monitoring terminals offers three different operating modes:

- Three-phase tripping for all kinds of faults (3ph operating mode)
- Single-phase tripping for single-phase faults and three-phase tripping for multi-phase and evolving faults (1ph/3ph operating mode). The logic also issues a three-phase tripping command when phase selection within the operating protection functions is not possible, or when external conditions request three-phase tripping.
- Single-phase tripping for single-phase faults, two-phase tripping for ph-ph and ph-ph-E faults and three-phase tripping for three-phase faults (1ph/2ph/3ph operating mode). The logic also issues a three-phase tripping command when phase selection within the operating protection functions is not possible or at evolving multi-phase faults.

The three phase trip for all faults gives a simple solution and is often sufficient in well meshed transmission systems and in sub-transmission systems.

As most faults, especially on the highest voltage levels, are single phase to earth faults, single phase tripping can be of great value. If the faulted phase is tripped only, power can be transferred on the line also during the dead time before reclosing. The single phase tripping at single phase faults must be combined with single pole reclosing.

Two phase tripping can be valuable on lines running parallel to each other.

1.2 Functionality

The minimum duration of a trip output signal from the TR function is 150ms. This is to secure the fault clearance.

The three-pole TR function has a single input through which all trip output signals from the protection functions within the terminal, or from external protection functions via one or more of the terminal’s binary inputs, are routed. It has a single trip output for connection to one or more of the terminal’s binary outputs, as well as to other functions within the terminal requiring this signal.

The expanded TR function for single- and two-pole tripping has additional phase segregated inputs for this, as well as inputs for faulted phase selection. The latter inputs enable single- and two-pole tripping for those functions which do not have their own phase selection capability, and therefore which have just a single trip output and not phase segregated trip outputs for routing through the phase segregated trip inputs of the expanded TR function. Examples of such protection functions are the residual overcurrent protections. The expanded TR function has two inputs for these functions, one for impedance tripping (e.g. carrier-aided tripping commands from the scheme communication logic), and one for earth fault tripping (e.g. tripping output from a residual overcurrent protection). Additional logic secures a three-pole final trip command for these protection functions in the absence of the required phase selection signals.

The expanded TR function has three trip outputs, one per phase, for connection to one or more of the terminal's binary outputs, as well as to other functions within the terminal requiring these signals. There are also separate output signals indicating single pole, two pole or three pole trip. These signals are important for the cooperation with the auto-reclosing function.

The expanded TR function is equipped with logic which secures correct operation for evolving faults as well as for reclosing on to persistent faults. A special input is also provided which disables single- and two-pole tripping, forcing all tripping to be three-pole.

1.3 Design

The function consists of the following basic logic parts:

- A three-phase front logic that is activated when the terminal is set into exclusive three-phase operating mode.
- A phase segregated front logic that is activated when the terminal is in 1ph/3ph or 1ph/2ph/3ph operating mode.
- An additional logic for evolving faults and three-phase tripping when the function operates in 1ph/3ph operating mode.
- An additional logic for evolving faults and three-phase tripping when the function operates in 1ph/2ph/3ph operating mode.
- The final tripping circuits.

Three-phase front logic

Figure 109 shows a simplified block diagram of a three-phase front logic. Descriptions of different signals are available in signal list.

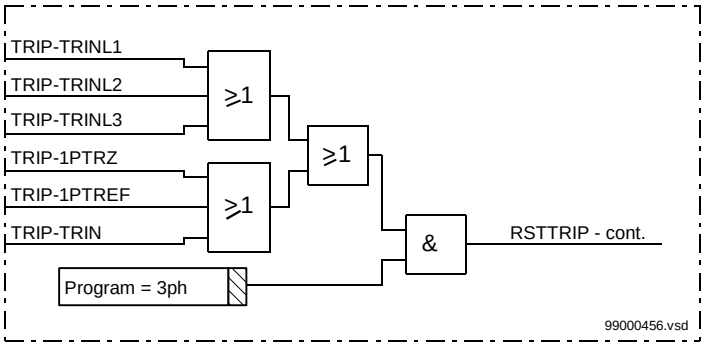

Figure 109: Three-phase front logic - simplified logic diagram

Any of active functional input signals activates the RSTTRIP internal signal, which influences the operation of the final tripping circuits.

Phase segregated front logic

The following input signals to the single-phase front logic influence the single-phase tripping of the terminal (see figure 110):

- Phase related tripping signals from different built-in protection functions that can operate on a phase segregated basis and are used in the terminal. The output signals of these functions should be configured to the TRIP-TRINLn (n = 1...3) functional inputs.
- Internal phase-selective tripping signals from different phase selection functions within the terminal, like PHS (phase selection for distance protection) or GFC (general fault criteria). The output signals of these functions should be configured to the TRIP-PSLn (n = 1...3) functional inputs. It is also possible to connect to these functional inputs different external phase selection signals.
- Single-phase tripping commands from line distance protection or carrier aided tripping commands from scheme communication logic for distance protection, which initiate single-phase tripping. These signals should be configured to the TRIP-1PTRZ functional input. It is also possible to configure a tripping output from an earth-fault overcurrent protection, to initiate the single-pole trip in connection with some external phase selection function. This signal should be configured to the TRIP-1PTREF functional input.

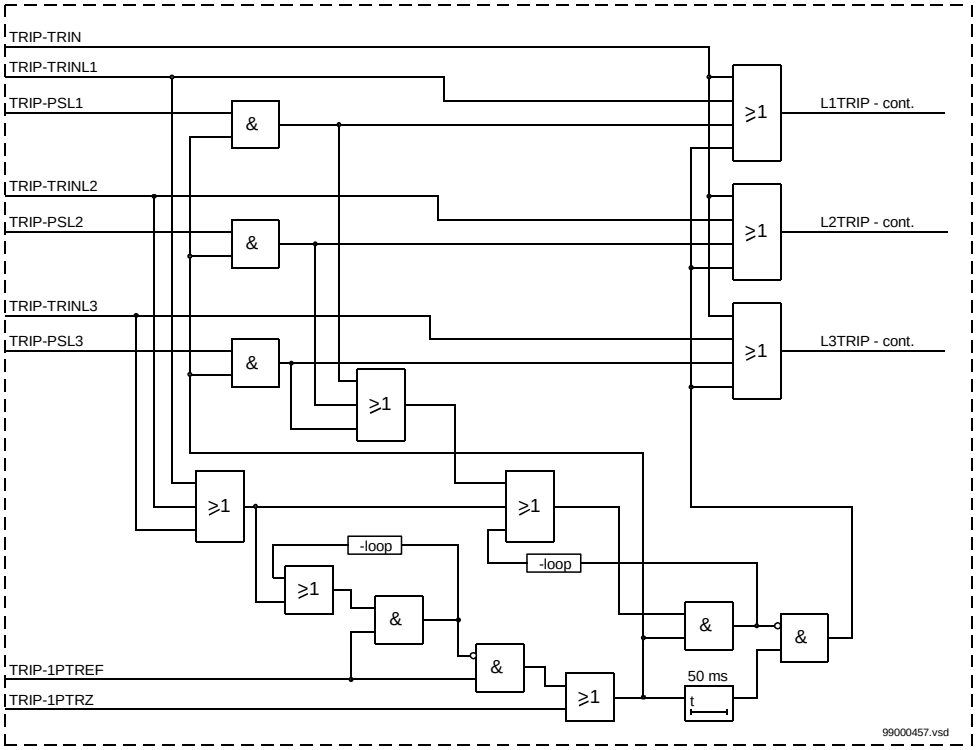

Figure 110: Phase segregated front logic

The TRIP-1PTRZ signal enables tripping corresponding to phase selection signals without any restriction while any phase selective external tripping signals prevent such tripping from the TRIP-1PTREF signal.

If any of these signals continues for more than 50 ms without the presence of any phase selection signals, three-phase tripping command is issued.

It is possible to configure the TRIP-1PTREF signal to the output signal of the EF--- TRIP overcurrent, earth-fault, protection function (directional and nondirectional). This enables single-phase tripping when the faulty phase is detected by some other phase-selection element such as the phase selection in distance protection.

Additional logic for 1ph/3ph operating mode

Figure 111 presents the additional logic when the trip function is in 1ph/3ph operating mode. A TRIP-P3PTR functional input signal activates a three pole tripping if at least one phase within the front logic initiates a trip command.

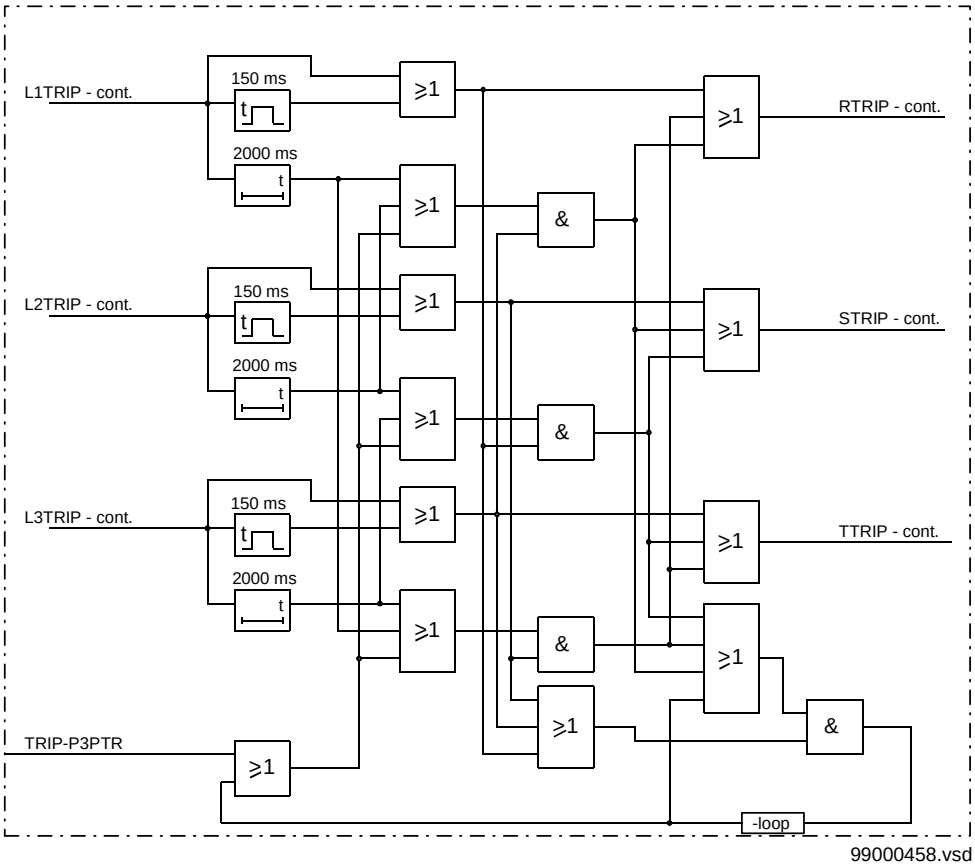

Figure 111: Additional logic for the 1ph/3ph operating mode

If only one of internal signals LnTRIP is present without the presence of a TRIP-P3PTR signal, a single pole tripping information is send to the final tripping circuits. A three-phase tripping command is initiated in all other cases.

Built-in drop-off delayed (two second) timers secure a three-phase tripping for evolving faults if the second fault occurs in different phase than the first one within a two second interval after initiation of a first tripping command.

Additional logic for 1ph/2ph/3ph operating mode

Figur 111 presents the additional logic, when the trip function is in 1ph/2ph/3ph operating mode. A TRIP-P3PTR functional input signal activates a three pole tripping if at least one phase within the front logic initiates a trip command.

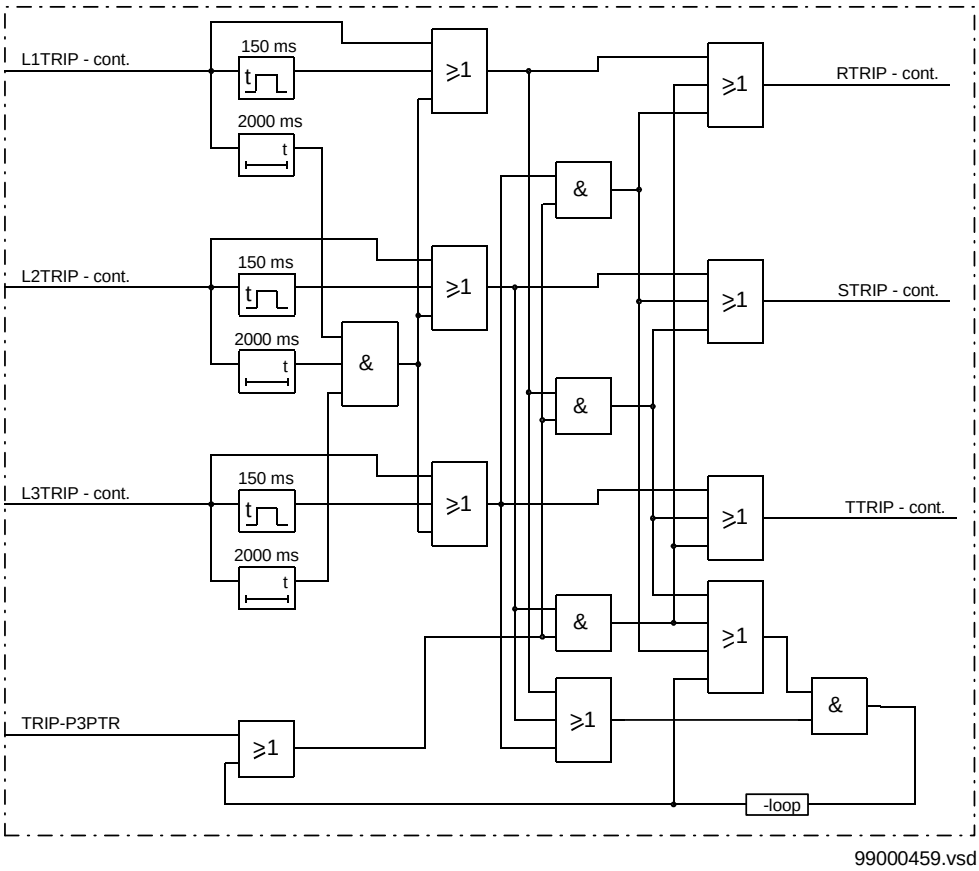

Figure 112: Additional logic for the 1ph/2ph/3ph operating mode

The logic initiates a single-phase tripping information to the final logic circuits, if only one of internal input signals (LnTRIP) is active. A two phase tripping information is send in case, when two out of three input signals LnTRIP are active. A three phase tripping information requires all three LnTRIP input signals to be active.

The built in drop-off delayed (two seconds) timers secure correct three-phase tripping information, when the faults are detected within two seconds in all three phases.

Final tripping circuits

Figur 113 present the final tripping circuits for a tripping function within the REx 5xx terminals. The TRIP-BLOCK functional input signal can block the operation of a function, so that no functional output signals become logical one. Detailed explanation of functional output signals is available in signal list.

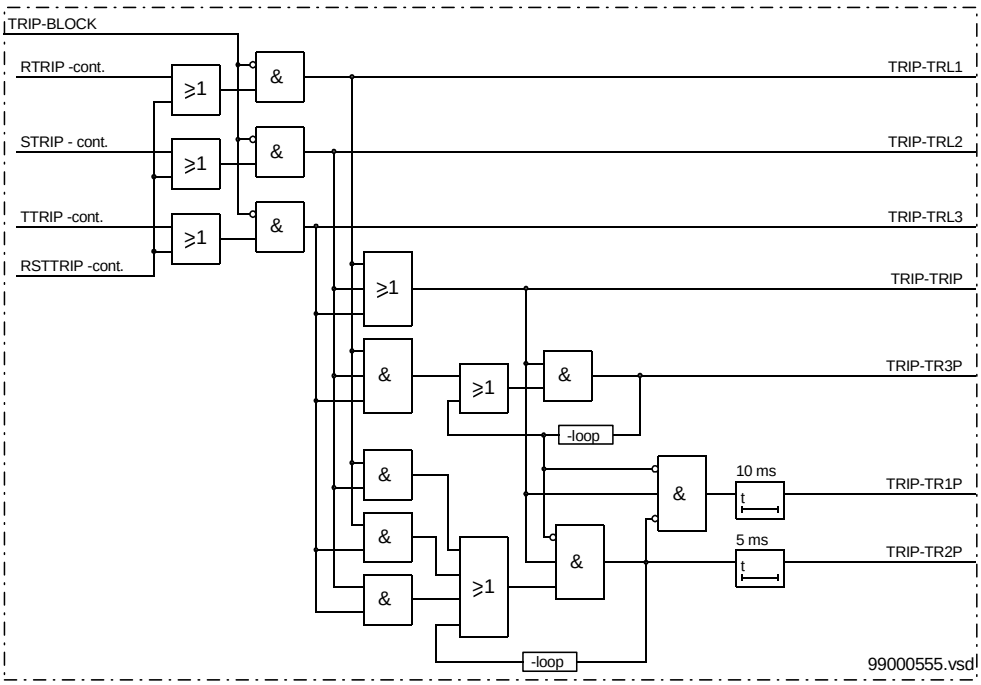

Figure 113: Final tripping circuits

2 High speed binary output logic (HSBO)

2.1 Application

The high-speed binary out logic (HSBO--) is included as basic and is used as a supplement to the high-speed protection function (HS--) and the distance protection zone 1 function (ZM1--) in the REx 5xx terminals.

Depending on the terminal type (actually the set of included functions) the following description will be valid entirely or partly.

Together with the high-speed binary out logic, the high-speed (distance) protection and the (main) distance protection zone 1 obtain even shorter operate times since the critical connections to/from binary output/input are established in a more straightforward way than in the case of using the regular I/O-modules.

The high-speed binary out logic also includes trip scheme logic employing the same ‘fast’ connections. The HSBO trip scheme logic will run in parallel with the regular trip scheme logic configured within the terminal (ZC1P and ZCOM). In fact, information from these two functions will be used in the HSBO function.

2.2 Functionality

The operation of the high-speed binary out logic overruns all other logical circuits within the terminal and activates, with minimum time delay, the binary outputs (output relays). The same relays should also be activated by the normal functional outputs of corresponding built-in functions (TRIP function, for example). The reason for this is that the ‘fast’ (phase segregated) outputs of the HSBO function should bring forward an earlier activation of trip and carrier send signals that are supposed to be continued by the regular functions (TRIP, ZC1P and ZCOM function). For example, the trip signals that are issued by the high-speed protection function through the HSBO function are presented as short pulses (20ms) and therefore they need to be extended (continued). In the general case, this would be provided for by the intervention of the TRIP function.

The operation is dependent upon other functions within the terminal. To achieve correct functionality, it is absolutely necessary that all depending functions are configured correctly, set on and not blocked. With respect to the employed distance protection transfer trip scheme the HSBO function will retrieve the necessary information from the regular communication functions (ZC1P or ZCOM) in order to determine the mode of operation. The HSBO function will support intertrip, permissive under-reach and permissive

overreach scheme. There is, however, one exception to the possible use of these schemes. A delayed operation within the communication functions (ZCOM or ZC1P) (i.e. tCoord > 0) is not allowed. In this case the trip scheme logic within the HSBO function should be blocked through activating input HSBO-BLKZCTR. Do not use the default value for tCoord of 50ms.

The main configuration for the function is shown in figure 114 below.

This configuration is made internally and cannot be altered.

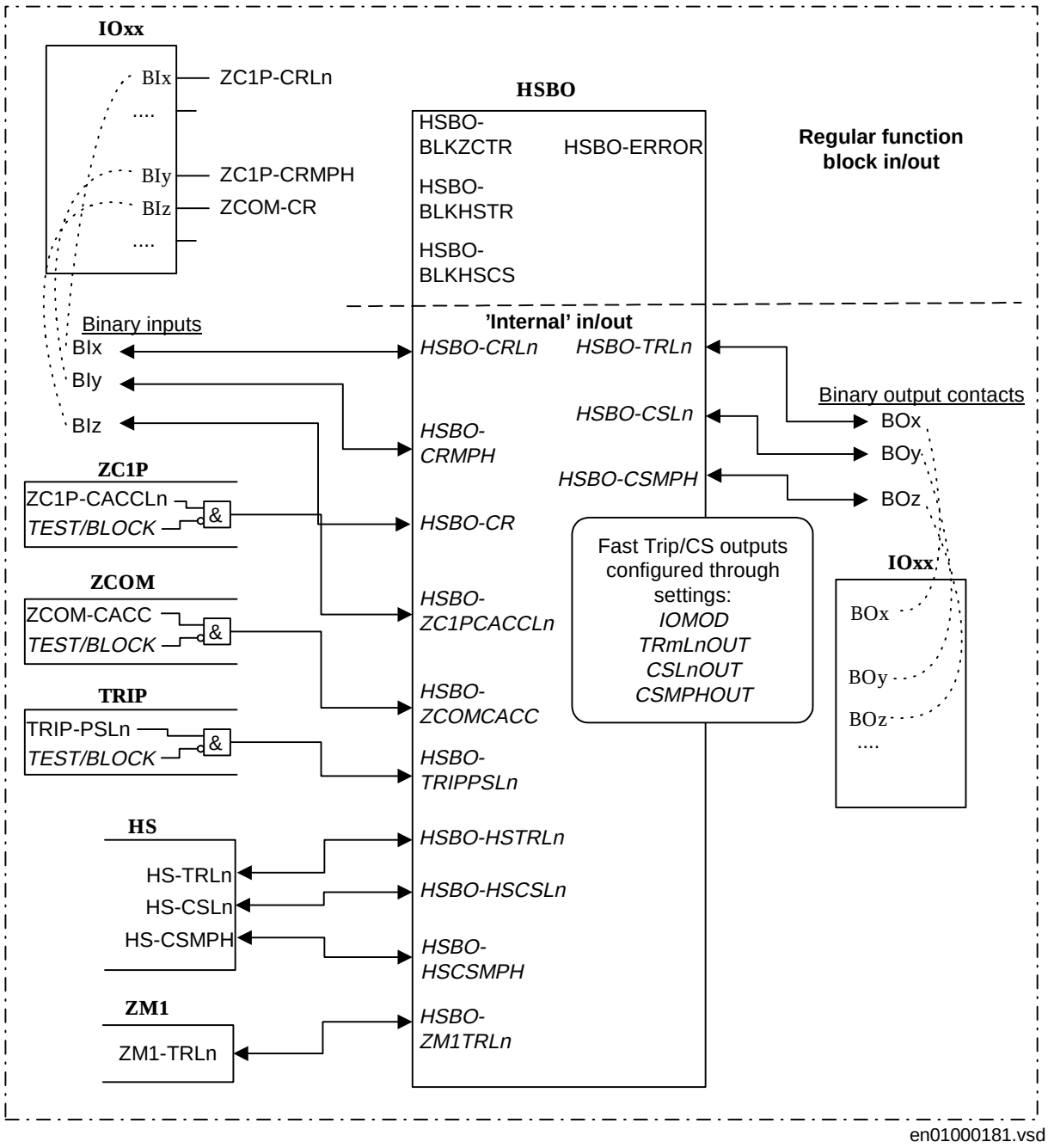

Figure 114: Simplified diagram of the high-speed binary out logic function together with depending functions

According to the presented ‘internal’ configuration input will be brought in from the HS, ZM1, ZC1P, ZCOM and TRIP functions.

In the case of carrier receive signals, the input will be attained directly from binary input overriding the binary I/O-modules. This is obtained by means of looking up and connecting to the input contacts used for the carrier receive inputs of the ZC1P and/or the ZCOM function. This calls for that the carrier receive inputs of the latter functions must be connected **directly to a binary I/O-module**, with nothing in between. In figure 114 this is illustrated with ZC1P-CRLn and ZCOM-CR connected to arbitrary binary in (BIx, BIy,...).

The input signals (HSBO-ZC1PCACCLn, HSBO-ZCOMCACC and HSBO-TRIPPSLn) are connected to the inputs on respective function block. This means that the high-speed binary out logic runs in parallel with those functions. But **it is important** that the functions are **set on** so the signals are received with true values. Otherwise, the logic can malfunction. Note that these signals can be blocked in the function from where they originate.

Similarly, input signals HSBO-HSTRLn, HSBO-CSLn and HSBO-HSCSMPH are connected to the output of the HS function. Input signals HSBO-ZM1TRLn are connected to the output of the ZM1 function.

Shown connections to in and outputs of the other function blocks (ZC1P-, ZCOM-, TRIP-, HS- and ZM1-) can not be reconfigured. They are so called *hard connections* in the software and done during manufacturing.

The output signals (trip and carrier send) must be configured to appropriate binary output contacts during engineering. This is done through configuring the corresponding parameters of the HSBO-function in CAP 531 (IOMOD, TRmLnOUT, CSLnOUT and CSMPHOUT).

It should be noted that trip output from the HSBO-function can be issued either from the HS-function or the ZM1-function, or both in parallel, dependin on terminal type and setting. As specified above the common trip outputs are configured through parameters TRmLnOUT.

The blocking input signals (HSBO-BLKZCTR, -BLKHSTR and -BLK-HSCS) are normal function input signals. The configuration is done with the configuration tool CAP 531 as usual.

The error output signal (HSBO-ERROR) indicates if the present configuration of ‘fast’ trip and carrier send output does not correspond to actual hardware (binary output cards). The signal can be used for indication or as wanted.

2.3 Design

The internal design of the functional block is shown in figure 115 below.

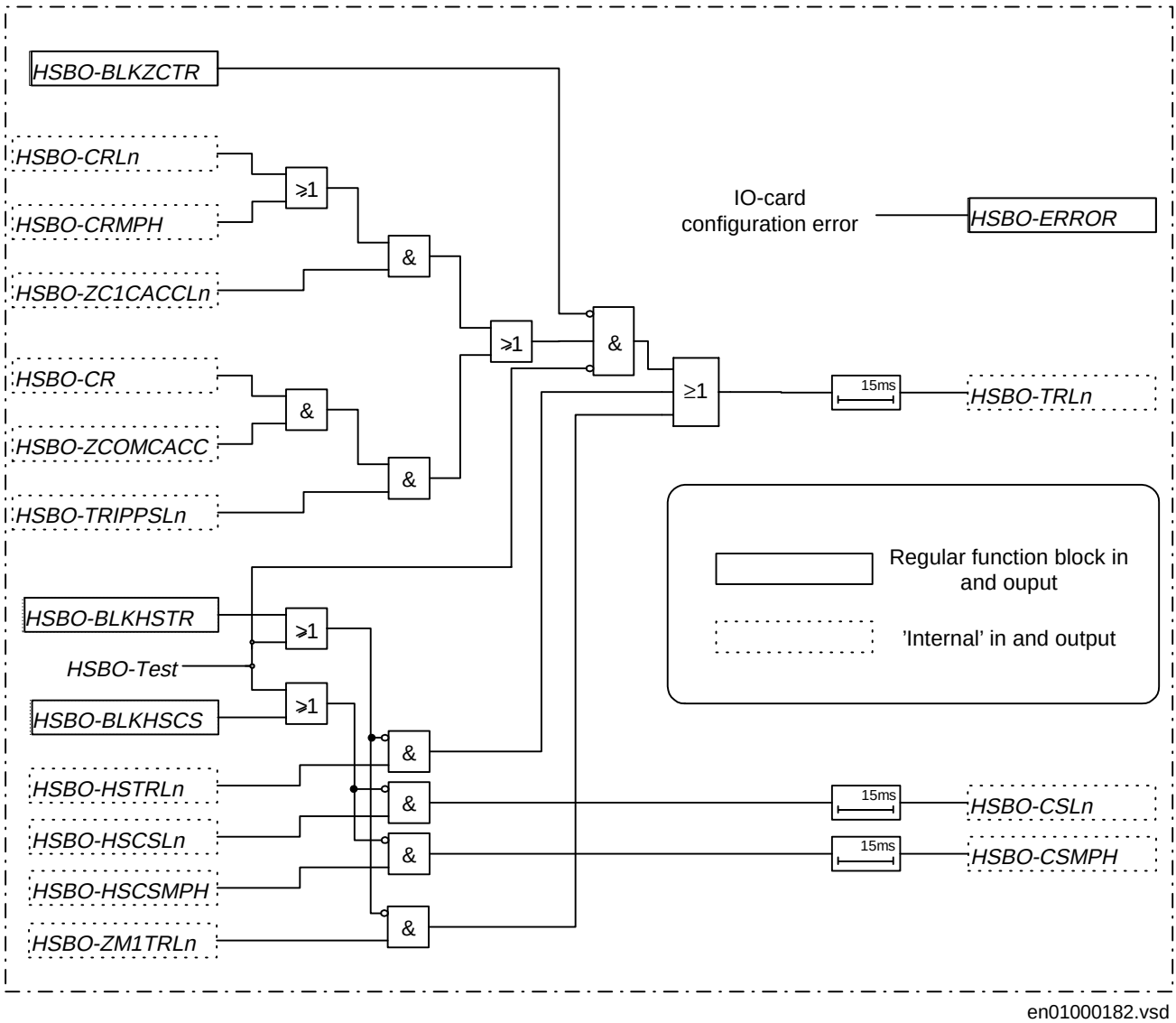

Figure 115: Simplified logic diagram of the function block

Below is a description of the internal input/output signals.

Input signals:

HSBO-CRLn	Carrier receive signal, for phase n (n=1..3), connected to the binary input. These inputs use the same signals as the inputs to the communication logic ZC1P-.
HSBO-CRMPH	A carrier receive signal, multi-phase, connected to a binary input. It uses the same signal as the input to the communication logic ZC1P-.
HSBO-ZC1PCACCLn	Carrier acceleration signals, for phase n (n=1..3). They are connected internally to the input of the communication logic ZC1P- and cannot be redirected.
HSBO-CR	A carrier receive signal connected to a binary input, already connected to the corresponding input of the communication logic ZCOM-.
HSBO-ZCOM-CACC	A carrier acceleration signal. Is a hard connection to the input of the communication logic ZCOM-.
HSBO-TRIPPSLn	Phase selection signal, selected phase n (n=1..3). Is a hard connection to the input of the trip function block TRIP-.
HSBO-ZM1TRLn	Trip signal, of phase n (n=1..3). Is a hard connection to the output of the distance protection zone 1 function block ZM1-.
HSBO-HSTRLn	Trip signal, of phase n (n=1..3). Is a hard connection to the output of the high-speed function block HS---.
HSBO-HSCSLn	Carrier send signals, of phase n (n=1..3). Is a hard connection to the output of the high-speed function block HS---.
HSBO-HSCSMPH	A carrier send signal, multi-phase. Is a hard connection to the output of the high-speed function block HS---.

Configuration parameters

Output signals:

IOMOD	Parameter for selecting the binary out card supposed to transfer the ‘fast’ outputs of the HSBO function.
TRmLnOUT	Parameter for selecting the specific binary output contact intended for trip signal m of phase n. m is either 1 or 2. Both the ‘TR1LnOUT-output’ and ‘TR2LnOUT-output’ carry the same signal, for a possible double-breaker arrangement. It is recommended that these trip outputs are configured to the same contacts as the corresponding regular trip outputs (of the TRIP function). If three-pole trip is required all three trip outputs should be configured to the same contact (i.e. TRxL1OUT=TRxL2OUT=TRxL3OUT). Consider that the trip signals can be issued from the HS function and/or the ZM1 function.
CSLnOUT	Parameter for selecting the specific binary output contact intended for carrier send signal of phase n. Like in the trip output case above, it is recommended that these carrier send outputs are configured to the same contacts as the corresponding regular carrier send outputs (of the ZC1P or ZCOM function).
CSMPHOUT	Parameter for selecting the specific binary output contact intended for the multi-phase carrier send signal. If it is applicable, connect it to the same contact as the regular multi-phase carrier send signal (of the ZC1P function).

Status of the output signals can be viewed on the local HMI under menu:

ServiceReport
Functions
Impedance
HighSpeedBO
FuncOutputs

Here, the signals are designated:

HSBO-TRLn

HSBO-CSLn

HSBO-CSMPH

3 Event function (EV)

3.1 Application

When using a Substation Automation system, events can be spontaneously sent or polled from the terminal to the station level. These events are created from any available signal in the terminal that is connected to the event function block. The event function block can also handle double indication, that is normally used to indicate positions of high-voltage apparatuses. With this event function block, data also can be sent to other terminals over the interbay bus.

3.2 Functionality

The events can be created from both internal logical signals and binary input channels. The internal signals are time tagged in the main processing module, while the binary input channels are time tagged directly on each I/O module. The events are produced according to the set event masks. The event masks are treated commonly for both the LON and SPA channels. All events according to the event mask are stored in a buffer, which contains up to 1000 events. If new events appear before the oldest event in the buffer is read, the oldest event is overwritten and an overflow alarm appears.

The outputs from the event function block are formed by the reading of status and events by the station HMI on either every single input or double input. The user-defined name for each input is intended to be used by the station HMI.

Twelve of the event function blocks are executed with fast cyclicity. That means that the time-tagging resolution on the events that are emerging from internal logical signals, created from configurable logic, is the same as the cyclicity of this logic. The time tagging resolution on the events that are emerging from binary input signals have a resolution of 1 ms.

Two special signals for event registration purposes are available in the terminal, *Terminal restarted and Event buffer overflow.*

3.3 Design

General

As basic, 12 event function blocks EV01-EV12 running with a fast cyclicity, are available in REx 5xx. When the function Apparatus control is included in the terminal, additional 32 event function blocks EV13-EV44, running with a slower cyclicity, are available.

Each event function block has 16 connectables corresponding to 16 inputs INPUT1 to INPUT16. Every input can be given a name with up to 19 characters from the CAP 531 configuration tool.

The inputs can be used as individual events or can be defined as double indication events.

The inputs can be set individually from the Parameter Setting Tool (PST) under the Mask-Event function as:

- No events
- OnSet, at pick-up of the signal
- OnReset, at drop-out of the signal
- OnChange, at both pick-up and drop-out of the signal

Also an input PrColxx (xx=01-44) is available on the function block to define on which protocol the events shall be sent.

The event function blocks EV01-EV06 have inputs for information numbers and function type, which are used to define the events according to the communication standard IEC 60870-5-103.

Double indication

Double indications are used to handle a combination of two inputs at a time, for example, one input for the open and one for the close position of a circuit breaker or disconnector. The double indication consists of an odd and an even input number. When the odd input is defined as a double indication, the next even input is considered to be the other input. The odd inputs has a suppression timer to suppress events at 00 states.

To be used as double indications the odd inputs are individually set from the SMS under the Mask-Event function as:

- Double indication
- Double indication with midposition suppression

Here, the settings of the corresponding even inputs have no meaning.

These states of the inputs generate events. The status is read by the station HMI on the status indication for the odd input:

- 00 generates an intermediate event with the read status 0
- 01 generates a close event with the read status 1
- 10 generates an open event with the read status 2
- 11 generates an undefined event with the read status 3

Communication between terminals

The BOUND and INTERVAL inputs are available on the event function block.

The BOUND input set to 1 means that the output value of the event block is bound to another control terminal on the LON bus. The event function block is then used to send data over the LON bus to other REx 5xx terminals. The most common use is to transfer interlocking information between different bays. That can be performed by an event function block used as a send block and with a Multiple Command function block used as a receive block. The document *Apparatus Control* describes how to transfer the interlocking information. The configuration of the communication between control terminals is made by the LON Network Tool.

The INTERVAL input is applicable only when the BOUND input is set to 1. The INTERVAL is intended to be used for cyclic sending of data to other control terminals via the LON bus with the interval time as set. This cyclic sending of data is used as a backup of the event-driven sending, which always is performed. With cyclic sending of data, the communication can be supervised by a corresponding INTERVAL input on the Multiple Command function block in another control terminal connected to the LON bus. This INTERVAL input time is set a little bit longer than the interval time set on the event function block. With INTERVAL=0, only event-driven sending is performed.

3.4 Calculations

The event reporting can be set from the PST as:

- Use event masks
- Report no events
- Report all events

Use of event masks is the normal reporting of events, that is, the events are reported as defined in the database.

An event mask can be set individually for each available signal in the terminal. The setting of the event mask can only be performed from the PST.

All event mask settings are treated commonly for all communication channels of the terminal.

Report no events means blocking of all events in the terminal.

Report all events means that all events, that are set to OnSet/OnReset/OnChange are reported as OnChange, that is, both at set and reset of the signal. For double indications when the suppression time is set, the event ignores the timer and is reported directly. Masked events are still masked.

Parameters to be set for the event function block are:

- T_SUPRyy including the suppression time for double indications.
- NAMEyy including the name for each input.
- PrColxx including the type of protocol for sending the events.
- INTERVAL used for the cyclic sending of data.
- BOUND telling that the block has connections to other terminals over the LON bus.
- FuncTEVx (for EV01-EV06) including the function type for sending events via IEC 60870-5-103.
- InfoNoyy (for EV01-EV06) including the information number for the events sending via IEC 60870-5-103.

These parameters are set from the CAP 531 configuration tool. When the BOUND parameter is set, the settings of the event masks have no meaning.

Chapter 10 Monitoring

About this chapter

This chapter describes the monitoring functions.

1 Disturbance report (DRP)

1.1 Application

Use the disturbance report to provide the network operator with proper information about disturbances in the primary network. Continuous collection of system data and, at occurrence of a fault, storing of a certain amount of pre-fault, fault and post-fault data, contributes to the highest possible quality of electrical supply. The stored data can be used for analysis and decision making to find and eliminate possible system and equipment weaknesses.

The function comprises several sub functions enabling different users to access relevant information in a structured way.

1.2 Functionality

The disturbance report is a common name for several facilities to supply the operator with more information about the disturbances in the system. Some of the facilities are basic and some are optional in the different products. For some products not all facilities are available.

The facilities included in the disturbance report are:

- General disturbance information
- Indications
- Event recorder
- Fault locator
- Trip values (phase values)
- Disturbance recorder

The whole disturbance report can contain information for up to 10 disturbances, each with the data coming from all the parts mentioned above, depending on the options installed. All information in the disturbance report is stored in non-volatile flash memories. This implies that no information is lost in case of loss-of-power supply

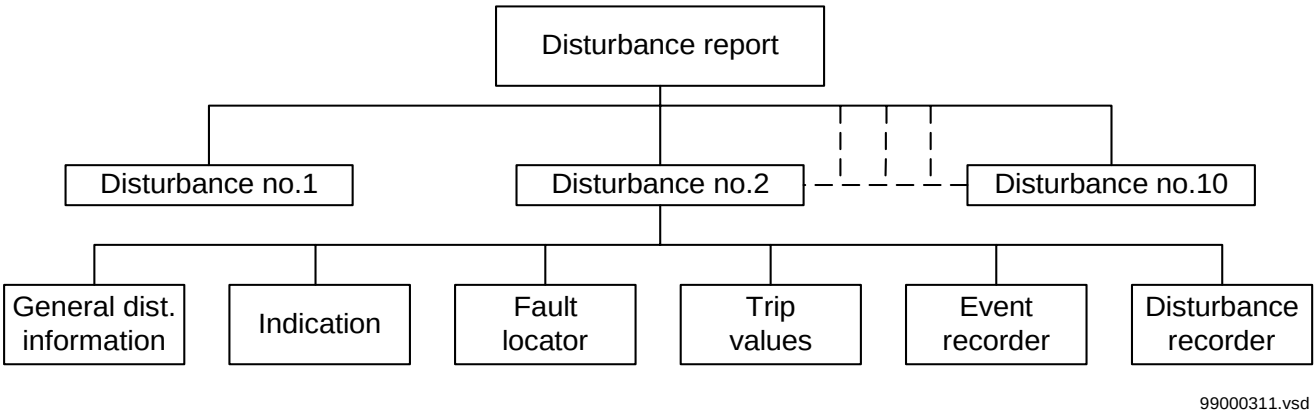

Figure 116: Disturbance report structure

Up to 10 disturbances can always be stored. If a new disturbance is to be recorded when the memory is full, the oldest disturbance is over-written by the new one. The nominal memory capacity for the disturbance recorder is measured with 10 analog and 48 binary signals recorded, which means that in the case of long recording times, fewer than 10 disturbances are stored. If fewer analog signals are recorded, a longer total recording time is available. This memory limit does not affect the rest of the disturbance report.

Disturbance information

The indications, the fault locator result (when applicable), and the trip values are available on the local HMI. For a complete disturbance report, front communication with a PC or remote communication with SMS is required.

Disturbance overview is a summary of all the stored disturbances. The overview is available only on a front-connected PC or via the Station Monitoring System (SMS). The overview contains:

- Disturbance index
- Date and time
- Trip signals
- Trigger signal that activated the recording
- Distance to fault (requires Fault locator)
- Fault loop selected by the Fault locator (requires Fault locator)

Disturbance Summary is automatically scrolled on the local human-machine interface (HMI). Here the two latest disturbances (DisturbSummary 1, which is the latest and DisturbSummary 2 which is the second latest) are presented with:

- Date and time
- Selected indications (set with the Indication mask)
- Distance to fault and fault loop selected by the Fault locator

Disturbance data on the HMI is presented at:

DisturbReport/Disturbances/Disturbance n (n=1 - 10)

The date and time of the disturbance, the trigger signal, the indications, the fault locator result and the trip values are available, provided that the corresponding functions are installed.

Indications

Indications is a list of signals that were activated during the fault time of the disturbance. A part (or all) of these signals are automatically scrolled on the local HMI after a disturbance.

Event recorder

The event recorder contains an event list with time-tagged events. In the Station Monitoring System, this list is directly connected to a disturbance.

Fault locator

The fault locator contains information about the distance to the fault and about the measuring loop that was selected for the calculation. After changing the system parameters in the terminal, a recalculation of the distance to the fault can be made in the protection

Trip values

Trip values includes phasors of currents and voltages before the fault and during the fault

Disturbance recorder

The disturbance recorder records analog and binary signal data before, during and after the fault.

Recording times

The disturbance report records information about a disturbance during a settable timeframe. The recording times are valid for the whole disturbance report. The disturbance recorder and the event recorder register disturbance data and events during *tRecording*, the total recording time. Indications are only registered during the fault time.

The total recording time, *tRecording*, of a recorded disturbance is:

tRecording = tPre + tFault + tPost or tPre + tLim, depending on which criterion stops the current disturbance recording

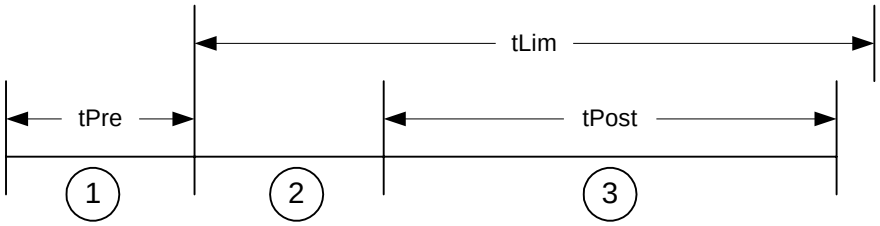

xx00000316.vsd

Table 12: Definitions

1	Pre-fault or pre-trigger recording time. The time before the fault including the operate time of the trigger. Use the setting tPre to set this time.
2	Fault time of the recording. The fault time cannot be set. It continues as long as any valid trigger condition, binary or analog, persists (unless limited by tLim the limit time).
3	Post fault recording time. The time the disturbance recording continues after all activated triggers are reset. Use the setting tPost to set this time.
tLim	Limit time. The maximum allowed recording time after the disturbance recording was triggered. The limit time is used to eliminate the consequences of a trigger that does not reset within a reasonable time interval. It limits the maximum recording time of a recording and prevents subsequent overwriting of already stored disturbances.Use the setting tLim to set this time.

Figure 117: The recording times definition

Analog signals

Up to 10 analog signals (five voltages and five currents from the transformer module) can be selected for recording and triggering if the disturbance recorder function is installed. If fewer than 10 signals are selected, the maximum storing capacity in the flash memories, regarding total recording time are increased.

A user-defined name for each of the signals can be programmed in the terminal.

For each of the 10 analog signals, *Operation = On* means that it is recorded by the disturbance recorder. The trigger is independent of the setting of *Operation*, and triggers even if operation is set to *Off*. Both undervoltage and overvoltage can be used as trigger condition. The same applies for the current signals.

The check of the trigger condition is based on peak-to-peak values. When this is found, the absolute average value of these two peak values is calculated. If the average value is above the threshold level for an overvoltage or overcurrent trigger, this trigger is indicated with a greater than (>) sign with the user-defined name.

If the average value is below the set threshold level for an undervoltage or undercurrent trigger, this trigger is indicated with a less than (<) sign with its name. The procedure is separately performed for each channel.

This method of checking the analog start conditions gives a function which is insensitive to DC offset in the signal. The operate time for this start is typically in the range of one cycle, 20 ms for a 50 Hz network.

The analog signals are presented only in the disturbance recording, but they affect the entire disturbance report when being used as triggers.

Binary signals

Up to 48 binary signals can be selected from the signal list, where all available signals are grouped under each function. The 48 signals can be selected from internal logical signals and binary input signals. Each of the 48 signals can be selected as a trigger of the disturbance report. It is also possible to set if the trigger should be activated on a logic 1 or a logic 0. A binary signal can be selected to activate the red LED on the local HMI.

A user-defined name for each of the signals can be programmed in the terminal.

The selected 48 signals are presented in the event list and the disturbance recording. But they affect the whole disturbance report when they are used as triggers.

The indications, that are to be automatically scrolled on the HMI when a disturbance has been recorded are also selected from these 48 signals with the HMI Indication Mask.

Trigger signals

The trigger conditions affect the entire disturbance report. As soon as a trigger condition is fulfilled, a complete disturbance report is recorded. On the other hand, if no trigger condition is fulfilled, there is no disturbance report, no calculation of distance to fault, no indications, and so on. This implies the importance of choosing the right signals as trigger conditions.

A trigger can be of type:

- Manual trigger
- Binary-signal trigger
- Analog-signal trigger (over/under function)

Manual trigger

A disturbance report can be manually triggered from the local HMI, a front-connected PC, or SMS. When the trigger is activated, the manual trigger signal is generated. This feature is especially useful for testing.

Manual trigger from the local HMI is found at:

DisturbReport
ManualTrig

Binary trigger

Any binary signal state (logic one or a logic zero) can be selected to generate a trigger. The binary signal must remain in a steady state for at least 15 ms to be valid.

When a binary signal is selected to generate a trigger from a logic zero, the selected signal will not be listed in the indications list of the disturbance report.

Analog trigger

All analog signals are available for trigger purposes, no matter if they are recorded in the disturbance recorder or not. But the disturbance recorder function must be installed in the terminal.

Retrigger

Under certain circumstances the fault condition may reoccur during the postfault recording, for instance by automatic reclosing to a still faulty network. In order to capture the new fault it is possible to allow retriggering during the PostFault recording.

1.3 Calculations

The main part of the settings for the Disturbance Report is found on the local human-machine interface (HMI) at:

Settings
DisturbReport

The settings include:

Operation	Disturbance Report (On/Off)
ReTrig	Re-trigger during post-fault state (On/Off)
SequenceNo	Sequence number (0-255) (normally not necessary to set)
RecordingTimes	Recording times for the Disturbance Report and the event/indication logging, including pre-fault time, post-fault time, and limit time for the entire disturbance
BinarySignals	Selection of binary signals, trigger conditions, HMI indication mask and HMI red LED option
AnalogSignals	Recording mask and trigger conditions
FaultLocator	Distance measurement unit (km/miles/%) km or miles selected under line reference

User-defined names of analog signals can be set at:

Configuration
AnalogInputs

The user-defined names of binary signals can be set at:

Configuration
DisturbReport
Input n (n=1-48)

The analog and binary signals appear with their user-defined names.

Settings during normal conditions

Table 13: How the settings affect different functions in the disturbance report

HMI Setting menu	Function	Disturbance summary (on HMI)	Disturbance recorder	Indications	Event list (SMS)	Trip values	Fault locator
Operation	Operation (On/Off)	Yes	Yes	Yes	Yes	Yes	Yes
Recording times	Recording times (tPre, tPost, tLim)	No	Yes	No	Yes	No	No
Binary signals	Trigger operation and trigger level	Yes	Yes	Yes	Yes	Yes	Yes
	Indication mask (for automatic scrolling)	Yes	No	No	No	No	No
Analog signals	Operation (On/Off)	No	Yes	No	No	Yes	Yes
	Trigger over/under function	Yes	Yes	Yes	Yes	Yes	Yes
Fault Locator	Fault locator settings (Distance Unit)	No	No	No	No	No	Yes

Operation

HMI submenu:

Settings
DisturbReport
Operation

Operation can be set to On or Off. If Off is selected, note that no disturbance report is registered, including indications, fault locator, event recorder, and disturbance recorder.

Operation = Off:

- Disturbances are not stored.
- LED information (yellow - start, red - trip) is not stored or changed.
- No disturbance summary is scrolled on the local HMI.

Operation = On:

- Disturbances are stored, disturbance data can be read from the local HMI and from a front-connected PC or Station Monitoring System (SMS).
- LED information (yellow - start, red - trip) is stored.
- The disturbance summary is automatically scrolled on the local HMI for the two latest registered disturbances, until cleared.

Post re-trigger can be set to On or Off

Postretrig = On:

Re-trigger during the set post-fault time is enabled.

Postretrig = Off:

Re-trigger during the set post fault time is not accepted.

Sequence number

HMI submenu:

Settings
DisturbReport
SequenceNo

Normally, this setting option is seldom used. Each disturbance is assigned a number in the disturbance report. The first disturbance each day normally receives *SequenceNo = 0*. The value of *SequenceNo* that can be read in the service report is the number that will be assigned to the next disturbance registered during that day.

In normal use, the sequence number is increased by one for each new disturbance until it is reset to zero each midnight.

Recording times

HMI submenu:

Settings
DisturbReport
RecordingTimes

Under this submenu, the different recording times for the disturbance report are set (the pre-fault time, post-fault time, and limit time). These recording times affect the disturbance recorder and event recorder functions. The total recording time, tRecording, of a recorded disturbance is:

tRecording = tPre + tFault + tPost, or tPre + tLim, depending on which criterion stops the current disturbance recording.

Binary signals

HMI submenu:

Configuration
DisturbReport
Input n (n=1-48)

Up to 48 binary signals can be selected from the signal list, where all available signals are grouped function by function. The 48 signals can be selected among internal logical signals and binary input signals. Each selected signal is registered by the disturbance recorder, event recorder, and indication functions during a recording.

A user-defined name for each of the signals can be entered. This name can comprise up to 13 characters.

HMI submenu:

Settings
DisturbReport
BinarySignals

For each of the 48 signals, it is also possible to select if the signal is to be used as a trigger for the start of the disturbance report (*TrigOperation*), and if the trigger should be activated at a logical 1 or 0 level (*TrigLevel*).

The indications in the disturbance summary, that are automatically scrolled on the HMI when a disturbance is registered, are also selected from these 48 signals using the indication mask.

Analog signals

HMI submenu:

Settings
DisturbReport
AnalogSignals

This HMI submenu is only available when the disturbance recorder option is installed. For each of the 10 analog signals (five voltages and five currents), Operation = On means that it is recorded by the disturbance recorder. If fewer than 10 signals are selected, the maximum storing capacity in the flash memories for total recording time becomes longer.

Both undervoltage and overvoltage can be used as trigger condition. The same applies for the current signals. The trigger is independent of the setting of *Operation* and triggers even if *Operation = Off*.

A user-defined name for each of the signals can be entered. It can consist of up to 13 characters. It is found at:

Configuration
AnalogInputs

Behaviour during test mode

When the terminal is set to test mode, the behaviour of the disturbance report can be controlled by the test mode disturbance report settings **Operation** and **DisturbSummary** available on the local HMI under:

Test/Testmode/DisturbReport

The impact of the settings are according to the following table:

Table 14: Disturbance report settings

Operation	Disturb-Summary	Then the results are...
Off	Off	• Disturbances are not stored. • LED information is not displayed on the HMI and not stored. • No disturbance summary is scrolled on the HMI.
Off	On	• Disturbances are not stored. • LED information (yellow - start, red - trip) are displayed on the local HMI but not stored in the terminal. • Disturbance summary is scrolled automatically on the local HMI for the two latest recorded disturbances, until cleared. • The information is not stored in the terminal.
On	On or Off	• The disturbance report works as in normal mode. • Disturbances are stored. Data can be read from the local HMI, a front-connected PC, or SMS.- LED information (yellow - start, red - trip) is stored. • The disturbance summary is scrolled automatically on the local HMI for the two latest recorded disturbances, until cleared. • All disturbance data that is stored during test mode remains in the terminal when changing back to normal mode.

2 Indications

2.1 Application

The indications from all the 48 selected binary signals are shown on the local human-machine interface (HMI) and on the Station Monitoring System (SMS) for each recorded disturbance in the disturbance report. The LEDs on the front of the terminal display start and trip indications.

2.2 Functionality

The indications shown on the HMI and SMS give an overview of the status of the 48 event signals during the fault. On the HMI, the indications for each recorded disturbance are presented at:

DisturbReport
Disturbances
Disturbance n (n=1-10)

All selected signals can be internally produced signals or emerge from binary input channels.

The indications are registered only during the fault time of a recorded disturbance, as long as any trigger condition is activated. A part or all of these indications can be automatically scrolled on the local HMI after a disturbance is recorded, until acknowledged with the C button on the HMI. They are selected with the indication mask.

The signal name for internal logical signals presented on the screen follows the signal name, which can be found in the signal list in each function description of the “Technical reference manual”. Binary input signals are displayed with their user-defined names.

The LED indications display this information:

Green LED:

- Steady light — In Service
- Flashing light — Internal fail, the INT--FAIL internal signal is high
- Dark — No power supply

Yellow LED:

- Steady light A disturbance report is triggered
- Flashing light The terminal is in test mode or in configuration mode

Red LED:

- Steady light Trig on binary signal with HMI red LED option set
- Flashing light The terminal is in configuration mode

2.3 Calculations

The signals to be displayed as indications are selected in the disturbance report setting. This can be found on the local HMI at:

Settings
DisturbReport
BinarySignals
Input n (n=1-48)

3 Disturbance recorder

3.1 Application

Use the disturbance recorder to achieve a better understanding of the behavior of the power network and related primary and secondary equipment during and after a disturbance. An analysis of the recorded data provides valuable information that can be used to improve existing equipment. This information can also be used when planning for and designing new installations.

The disturbance recording function in the REx 5xx terminals is characterized by great flexibility as far as starting conditions and recording times, and large storage capacity are concerned. Thus, the disturbance recorders are not dependent on the operation of protective functions, and they can record disturbances that were not discovered by protective functions for one reason or another.

The disturbance recording function in the REx 5xx terminals is fully adequate for the recording of disturbances for the protected object.

Use available software tools to retrieve the recordings and the evaluation software RE-VAL to analyze, evaluate and print recordings.

3.2 Functionality

Disturbance recording is based on the continuous collection of network data, analog values and binary signals, in a cyclic buffer. The buffer operates according to the FIFO principle, old data will be overwritten as new data arrives when the buffer is full. The size of this buffer is determined by the set pre-fault recording time.

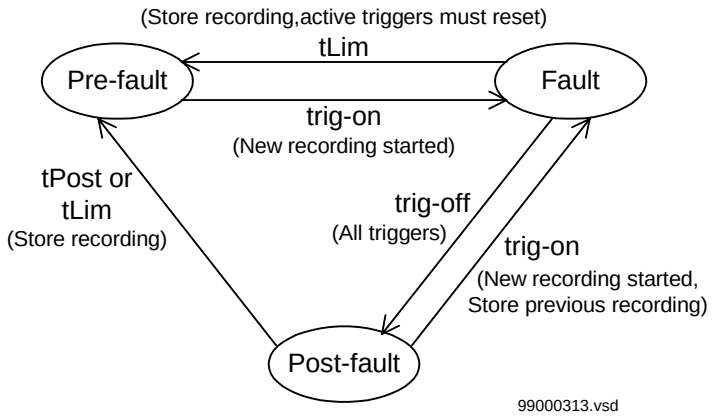

Upon detection of a fault condition (triggering), the data storage continues in another part of the memory. The storing goes on as long as the fault condition prevails - plus a certain additional time. The length of this additional part is called the post-fault time and it can be set in the disturbance report. The above mentioned two parts form a disturbance recording. The whole memory acts as a cyclic buffer and when it is full, the oldest recording is overwritten.

A user-defined name for each of the signals can be programmed in the terminal.

Recording Capacity

The recording function can record all analog inputs in the transformer module and up to 48 binary signals. To maximise the use of the memory, the number of analog channels to be recorded is user-selectable by programming and can be set individually for each analog input. The recorded binary signals can be either true binary input signals or internal logical signals created by the functions.

Memory capacity

The maximum number of recordings stored in the memory is 10. So depending on the set recording times and the recording of the enabled number of channels, the memory can contain a minimum of six and a maximum of 10 disturbance recordings comprising of both header part and data part. But the header part for the last 10 recordings is always available.

Time tagging

The terminal has a built-in, real-time clock and calendar. This function is used for time tagging of the recorded disturbances. The time tagging refers to the activation of the trigger that starts the disturbance recording.

Signal processing

The processing of analog signals is handled by a dedicated DSP (digital signal processor). Other functions are implemented in the main CPU. The memory is shared with other functions.

The numerical signals coming from the A/D conversion module in serial form are converted to parallel form in a dedicated DSP. The analog trigger conditions are also checked in the DSP.

A check of the start conditions is performed by searching for a maximum value. This is a positive peak. The function also seeks a minimum value, which is the negative peak.

When this is found, the absolute average value is calculated. If this value is above the set threshold level for the overfunction on the channel in question, an overfunction start on that channel is indicated. The overfunction is indicated with a greater than (>) sign.

Similarly, if the average value is below the set threshold level for underfunction on the channel in question, an underfunction start on that channel is indicated. The underfunction is indicated with a less than (<) sign.

The procedure is separately performed for each channel. This method of checking the analog start conditions gives a function that is insensitive to DC offset in the signal. The operating time for this start is typically in the range of one cycle, 20 ms in a 50 Hz network.

The numerical data, along with the result of the trigger condition evaluation, are transmitted to the main CPU. The main CPU handles these functions:

- Evaluation of the manual start condition
- Evaluation of the binary start condition, both for true binary input signals and for internally created logical signals
- Storage of the numerical values for the analog channels

The numerical data for the analog channels are stored in a cyclic pre-fault buffer in a RAM. When a trigger is activated, the data storage is moved to another area in the RAM, where the data for the fault and the subsequent post-fault period are stored. Thus, a complete disturbance recording comprises the stored data for the pre-fault, fault, and post-fault period.

The RAM area for temporary storage of recorded data is divided into sub-areas, one for each recording. The size of a subarea is governed by the sum of the set pre-fault (tPre) and maximum post-trigger (tLim) time. There is a sufficient memory capacity for at least four consecutive recordings with a maximum number of analog channels recorded and with maximum time settings. Should no such area be free at the time of a new trigger, the oldest recording stored in the RAM is overwritten.

When a recording is completed, a post recording processing occurs.

This post-recording processing comprises:

- Merging the data for analog channels with corresponding data for binary signals stored in an event buffer
- Compression of the data, which is performed without losing any data accuracy
- Storing the compressed data in a non-volatile memory (flash memory)

The recorded disturbance is now ready for retrieval and evaluation. The recording comprises the stored and time-tagged disturbance data along with relevant data from the database for configuration and parameter set-up.

Some parameters in the header of a recording are stored with the recording, and some are retrieved from the parameter database in connection with a disturbance. This means that if a parameter that is retrieved from the parameter database was changed between the time of recording and retrieval, the collected information is not correct in all parts. For this reason, all recordings should be transferred to the Station Monitoring System (SMS) workstation and then deleted in the terminal before any such parameters are changed.

3.3 Design

The recordings can be divided into two parts, the header and the data part. The data part contains the numerical values of recorded analog and binary channels. The header contains clearly written basic information about the disturbance. A part of this information is also used by REVAL to reproduce the analog and binary signals in a correct and user-friendly way. Such information is primary and secondary instrument transformer ratings.

Table 15: Disturbance header

Parameter	Parameter database	Stored with disturbance
General		
Station, object and ID	x	
Date and time		x
Sequence number		x
CT earthing	x	
Time synchronization source	x	
Collection window parameters tPre, tPost, tLim		x
Prefault phase-to-phase voltage and current RMS values		x
Trig signal and test flag		x
Analog signals		
Signal name	x	
Primary and secondary instrument transformer rating	x	
Undertrig: level and operation	x	
Overtrig: level and operation	x	

Parameter	Parameter data-base	Stored with distur-ance
Undertrig status at time of trig		x
Overtrig status at time of trig		x
Instantaneous phase voltage at time of trig		x
Instantaneous phase current at time of trig		x
Phase voltage and phase current before trig (prefault)		x
Phase voltage and phase current after trig (fault)		x
Binary signals		
Signal name		x
Type of contact (trig level)	x	
Trig operation	x	
Signal status at time of trig		x
Trig status at time of trig		x

3.4 Calculations

The setting parameters specific for the disturbance recording function are available in the menu tree under:

Settings
DisturbReport
Operation
SequenceNo
RecordingTimes
BinarySignals
AnalogSignals

The list of parameters in the “Technical reference manual”, explains the meaning of the abbreviations used in connection with setting ranges.

Remember that values of parameters set elsewhere in the menu tree are linked to the information on a recording. Such parameters are, for example, station and object identifiers, CT and PT ratios.

The sequence number of the recordings is a specific parameter for the disturbance recorder and is used to identify the different recordings. By combining the date and the sequence number for a recording, the recording can be uniquely identified. The sequence number is also shown under:

Settings
DisturbReport
SequenceNo

The read value on the local human-machine interface (HMI) display is the sequence number that the next recorded disturbance receives. The number is automatically increased by one for each new recording and is reset to zero at each midnight. The sequence number can also be set manually.

4 Event recorder

4.1 Application

When using a front-connected PC or Station Monitoring System (SMS), an event list can be available for each of the recorded disturbances in the disturbance report. Each list can contain up to 150 time-tagged events. These events are logged during the total recording time, which depends on the set recording times (pre-fault, post-fault and limit time) and the actual fault time. During this time, the first 150 events for all the 48 selected binary signals are logged and time tagged. This list is a useful instrument for evaluating a fault and is a complement to the disturbance recorder.

To obtain this event list, the event recorder function (basic in some terminals and optional in others) must be installed.

4.2 Functionality

When one of the trig conditions for the disturbance report is activated, the events are collected by the main processing unit, from the 48 selected binary signals. The events can come from both internal logical signals and binary input channels. The internal signals are time tagged in the main processing module, while the binary input channels are time tagged directly on each I/O module. The events are collected during the total recording time, *tRecording*, and they are stored in the disturbance report memory at the end of each recording.

The name of the binary input signal that appears in the event list is the user-defined name that can be programmed in the terminal.

The time tagging of events emerging from internal logical signals and binary input channels has a resolution of 1 ms.

4.3 Calculations

The settings of the event recorder consist of the signal selection and the recording times. It is possible to select up to 48 binary signals, either internal signals or signals coming from binary input channels. These signals coincide with the binary signals recorded by the disturbance recorder. The disturbance summary indications that are to scroll automatically on the local human-machine interface (HMI), can only be selected from these 48 event channels.

The signal selection is found at:

Settings
DisturbReport
BinarySignals
Input n (n=1-48)

Each of the up to 48 event channels can be selected from the signal list, consisting of all available internal logical signals and all binary input channels.

For each of the binary input and output signals, a user-defined name can be programmed at:

Configuration
I/O
Slotnn-XXXX (ex. Slot15-BOM3)

5 Fault locator (FLOC)

5.1 Application

The main objective of line protection and monitoring terminals is fast, selective and reliable operation for faults on a protected line section. Besides this, information on distance to fault is very important for those involved in operation and maintenance. Reliable information on the fault location greatly decreases the downtime of the protected lines and increases the total availability of a power system.

The distance to the fault, which is calculated with a high accuracy, is stored for the last ten recorded disturbances. This information can be read on the HMI or transferred via serial communication within the Station Monitoring System (SMS) or Station Control System (SCS).

The distance to fault can be recalculated for the latest 10 disturbances by using the measuring algorithm for different fault loops or for changed system parameters.

5.2 Functionality

5.2.1 Distance-to-fault locator

The distance-to-fault locator (FLOC-) in the REx 5xx terminals is an essential complement to different line protection functions, since it measures and indicates the distance to the fault with great accuracy. Thus, the fault can be quickly located for repairs.

The calculation algorithm considers the effect of load currents, double-end infeed and additional fault resistance.

The function indicates the distance to the fault as a percentage of the line length, in kilometers or miles as selected on the HMI.

The accuracy of measurement depends somewhat on the accuracy of the system parameters as entered into REx 5xx (for example source impedances at both ends of the protected line). If some parameters have actually changed in a significant manner relative to the set values, new values can be entered locally or remotely and a recalculation of the distance to the fault can be ordered. In this way, a more accurate location of the fault can be achieved.

In order to compensate for the influence of the zero-sequence mutual impedance Zm0 on the distance-to-fault calculation in case of faults on double circuit lines, the terminal has a special current transformer input for the residual current from the parallel line.

Any start of the disturbance reporting unit also starts the operation of the FLOC- function. The distance to the fault automatically appears on the local HMI, if the fault is also detected by the phase selection elements within the terminal. The currents and voltages before and during the fault are available via SCS/SMS. The terminal saves, in any other case, the pre-fault and fault values of currents and voltages for a particular disturbance. At any time a calculation of the distance to fault for a selected fault loop can be initiated manually.

The information on distance to fault automatically appears on the local HMI for the first fault only, if more than one fault appears within a time shorter than 10 seconds. Automatic reclosing on persistent faults enables this. In such a case the first set of data is more accurate than the second set. The unit also stores the phasors of currents and voltages for the last faults. A calculation can be initiated locally or remotely.

The percentage value is also binary coded, thus the distance to fault value can also be read on binary outputs of the terminal.

Additional information is specified in symbols before the distance-to-fault figure:

* A non-compensated model was used for calculation.

E Error, the fault was found outside the measuring range.

> The fault is located beyond the line, in forward direction.

Two signs can be combined, for example, *>.

5.3 Measuring principle

For transmission lines with voltage sources at both line ends, the effect of double-end infeed and additional fault resistance must be considered when calculating the distance to the fault from the currents and voltages at one line end. If this is not done, the accuracy of the calculated figure will vary with the load flow and the amount of additional fault resistance.

The calculation algorithm used in the distance-to-fault locator in REx 5xx line-protection terminals compensates for the effect of double-end infeed, additional fault resistance and load current.

5.3.1 Accurate algorithm for measurement of distance to fault

Figure 118 shows a single-line diagram of a single transmission line, that is fed from both ends with source impedances Z_A and Z_B. Assume, that the fault occurs at a distance F from terminal A on a line with the length L and impedance Z_L. The fault resistance is defined as R_F. A single-line model is used for better clarification of the algorithm.

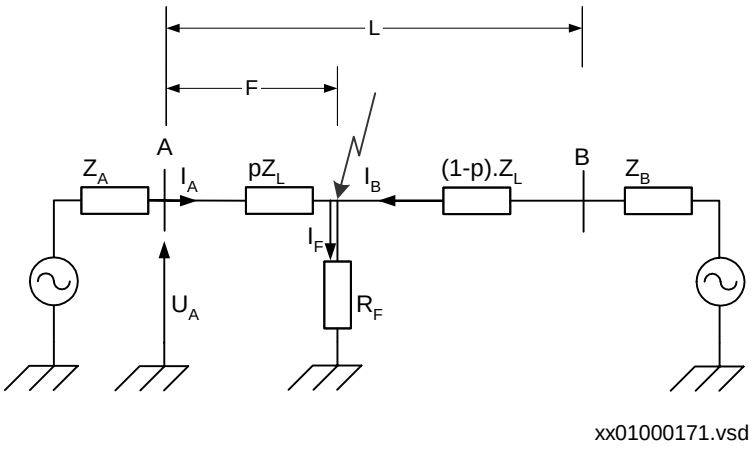

Figure 118: Fault on transmission line fed from both ends.

From figure 118 it is evident that:

$$U_A = I_A \cdot p \cdot Z_L + I_F \cdot R_F$$

(Equation 156)

Where:

I_A	is the line current after the fault, that is, pre-fault current plus current change due to the fault,
I_F	is the fault current and
p	is a relative distance to the fault

The fault current is expressed in measurable quantities by:

$$I_F = \frac{I_{FA}}{D_A}$$

(Equation 157)

Where:

I_{FA} is the change in current at the point of measurement, terminal A and

D_A is a fault current-distribution factor, that is, the ratio between the fault current at line end A and the total fault current.

For a single line, the value is equal to:

$$D_A = \frac{(1-p)\cdot Z_L + Z_B}{Z_A + Z_L + Z_B}$$

(Equation 158)

In case of phase short circuits, the change in the line currents is used directly. For earth faults, the better defined positive-sequence quantities, which eliminate the influence of the zero sequence currents of the network are used.

Thus, the general fault location equation for a single line is:

$$U_A = I_A \cdot p \cdot Z_L + \frac{I_{FA}}{D_A} \cdot R_F$$

(Equation 159)

The expressions for UA, IA and IFA for different types of faults are in table 16 below.

Table 16:

Fault type:	**UA**	**I_A**	**I_{FA}**
L1-N	U_{L1A}	$I_{L1A} + K_N \times I_{NA}$	$\frac{3}{2} \times \Delta(I_{L1A} - I_{0A})$
L2-N	U_{L2A}	$I_{L2A} + K_N \times I_{NA}$	$\frac{3}{2} \times \Delta(I_{L2A} - I_{0A})$
L3-N	U_{L3A}	$I_{L3A} + K_N \times I_{NA}$	$\frac{3}{2} \times \Delta(I_{L3A} - I_{0A})$

Fault type:	**UA**	**I_A**	**I_{FA}**
L1-L2-L3, L1-L2,L1-L2-N	U_{L1A}-U_{L2A}	I_{L1A} - I_{L2A}	ΔI_{L1L2A}
L2-L3, L2-L3-N	U_{L2A}-U_{L3A}	I_{L2A} - I_{L3A}	ΔI_{L2L3A}
L3-L1, L3-L1-N	U_{L3A}-U_{L1A}	I_{L3A} - I_{L1A}	ΔI_{L3L1A}

The K_N complex quantity for zero-sequence compensation for the single line is equal to:

$$K_N = \frac{Z_{0L} - Z_{1L}}{3 \cdot Z_{1L}}$$

(Equation 160)

ΔI is the change in current, that is the current after the fault minus the current before the fault.

In the following, the positive sequence impedance for Z_A, ZB and Z_L is inserted into the equations, because this is the value used in the algorithm.

For double lines, the fault equation is:

$$U_A = I_A \cdot p \cdot Z_{1L} + \frac{I_{FA}}{D_A} \cdot R_F + I_{0P} \cdot Z_{0M}$$

(Equation 161)

Where:

I_{0P} is a zero sequence current of the parallel line,

Z_{0M} is a mutual zero sequence impedance and

D_A is the distribution factor of the parallel line, which is:

$$D_A = \frac{(1 - p) \cdot (Z_A + Z_{AL} + Z_B) + Z_B}{2 \cdot Z_A + Z_L + 2 \cdot Z_B}$$

(Equation 162)

The K_N compensation factor for the double line becomes:

$$K_N = \frac{Z_{0L} - Z_{1L}}{3 \cdot Z_{1L}} + \frac{Z_{0M}}{3 \cdot Z_{1L}} \cdot \frac{I_{0P}}{I_{0A}}$$

(Equation 163)

From these equations it can be seen, that, if $Z_{0m} = 0$, then the general fault location equation for a single line is obtained. Only the distribution factor differs in these two cases.

Because the D_A distribution factor according to equation 158 or 162 is a function of p, the general equation 161 can be written in the form:

$$p^2 - p \cdot K_1 + K_2 - K_3 \cdot R_F = 0$$

(Equation 164)

Where:

$$K_1 = \frac{U_A}{I_A \cdot Z_L} + \frac{Z_B}{Z_L + Z_{ADD}} + 1$$

(Equation 165)

$$K_2 = \frac{U_A}{I_A \cdot Z_L} \cdot \left(\frac{Z_B}{Z_L + Z_{ADD}} + 1 \right)$$

(Equation 166)

$$K_3 = \frac{I_{FA}}{I_A \cdot Z_L} \cdot \left(\frac{Z_A + Z_B}{Z_1 + Z_{ADD}} + 1 \right)$$

(Equation 167)

and:

- $Z_{ADD} = Z_A + Z_B$ for parallel lines.
- I_A, I_{FA} and U_A are given in the above table.
- KN is calculated automatically according to equation 163.
- Z_A, Z_B, Z_L, Z_{0L} and Z_{0M} are setting parameters.

For a single line, Z0M = 0 and ZADD = 0. Thus, equation 164 applies to both single and parallel lines.

Equation 164 can be divided into real and imaginary parts:

$$p^2 - p \cdot Re(K_1) + Re(K_2) - R_F \cdot Re(K_3) = 0$$

(Equation 168)

$$-p \cdot Im \cdot (K_1) + Im \cdot (K_2) - R_F \cdot Im \cdot (K_3) = 0$$

(Equation 169)

If the imaginary part of K_3 is not zero, R_F can be solved according to equation 169, and then inserted to equation 168. According to equation 168, the relative distance to the fault is solved as the root of a quadratic equation.

Equation 168 gives two different values for the relative distance to the fault as a solution. A simplified load compensated algorithm, that gives an unequivocal figure for the relative distance to the fault, is used to establish the value that should be selected.

If the load compensated algorithms according to the above do not give a reliable solution, a less accurate, non-compensated impedance model is used to calculate the relative distance to the fault.

5.3.2 The non-compensated impedance model

In the non-compensated impedance model, I_A line current is used instead of I_{FA} fault current:

$$U_A = p \cdot Z_{1L} \cdot I_A + R_F \cdot I_A$$

(Equation 170)

Where:

I_A is according to table 16.

The accuracy of the distance-to-fault calculation, using the non-compensated impedance model, is influenced by the pre-fault load current. So, this method is only used if the load compensated models do not function and the display indicates whether the non-compensated model was used when calculating the distance to the fault.

5.4 Design

When calculating the distance to fault, pre-fault and fault phasors of currents and voltages are filtered from disturbance data stored in digital sample buffers.

When the disturbance report function is triggered, the fault locator function starts to calculate the frequency of the analogue channel U1. If the calculation fails, a default frequency is read from the database to ensure further execution of the function.

Then the sample for the fault interception is looked for by checking the non-periodic changes. The channel search order is U1, U2, U3, I1, I2, I3, I4, I5 and U5.

If no error sample is found, the trig sample is used as the start sample for the Fourier estimation of the complex values of currents and voltages. The estimation uses samples during one period before the trig sample. In this case the calculated values are used both as pre-fault and fault values.

If an error sample is found the Fourier estimation of the pre-fault values starts 1.5 period before the fault sample. The estimation uses samples during one period. The post-fault values are calculated using the Recursive Least Squares (RLS) method. The calculation starts a few samples after the fault sample and uses samples during 1/2 - 2 periods depending on the shape of the signals.

The pre-fault time (tPre) should be at least 0.1 s to ensure enough samples for the estimation of pre-fault trip values.

The phase selectors from the distance protection function provide the necessary information for the selection of the loop to be used for the calculation. The following loops are used for different types of faults:

- for 3 phase faults: loop L1 - L2.
- for 2 phase faults: the loop between the faulted phases.
- for 2 phase to earth faults: the loop between the faulted phases.
- for phase to earth faults: the phase to earth loop.

5.5 Calculations

The system parameters required for the correct operation of a FLOC function are available under:

Settings
Functions
Group n (n=1-4)
LineReference

The list of parameters (see the setting parameters in the Technical reference manual) explains the meaning of the abbreviations. Figure 119 also presents these system parameters graphically. Note, that all impedance values relate to their secondary values and to the total length of the protected line. The conversion procedure follows the same rules as for the distance-protection function.

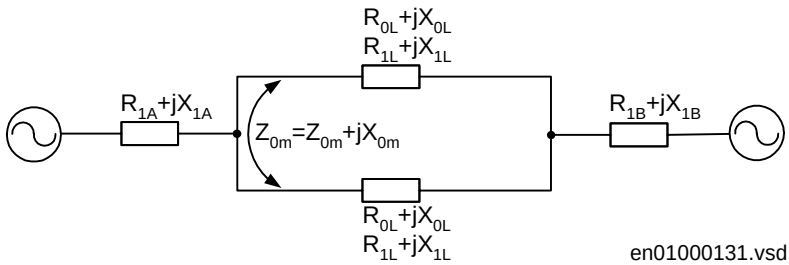

Figure 119: Simplified network configuration with network data, required for settings of the fault location-measuring function.

For a single-circuit line, the figures for mutual zero-sequence impedance (X_{0M}, R_{0M}) are set at zero.

The source impedance is not constant in the network. However, this has a negligible influence on the accuracy of the distance-to-fault calculation, because only the phase angle of the distribution factor has an influence on the accuracy. The phase angle of the distribution factor is normally very low and practically constant, because it is dominated by the positive-sequence line impedance, which has an angle close to 90°. Always set the source impedance resistance to values other than zero. If the actual values are not known, the values that correspond to the source impedance characteristic angle of 85° give satisfactory results.

6 Monitoring of AC analog measurements

6.1 Application

Fast, reliable supervision of different analogue quantities is of vital importance during the normal operation of a power system.

Operators in the control centres can, for example:

- Continuously follow active and reactive power flow in the network
- Supervise the busbar voltage and frequency

Different measuring methods are available for different quantities. Current and voltage instrument transformers provide the basic information on measured phase currents and voltages in different points within the power system. At the same time, currents and voltages serve as the input measuring quantities to power and energy meters, protective devices and so on.

Further processing of this information occurs within different control, protection, and monitoring terminals and within the higher hierarchical systems in the secondary power system.

6.2 Functionality

The REx 5xx protection, control, and monitoring terminals have as basic the functionality to measure and further process information about up to five input currents and five input voltages. The number of processed alternate measuring quantities depends on the type of terminal and built-in options. Additional information is also available:

- Mean values of measured currents I in the first three current measuring channels.
- Mean values of measured voltages U in the first three voltage measuring channels.
- Three-phase active power P as measured by the first three current and voltage measuring channels.
- Three-phase reactive power Q as measured by the first three current and voltage measuring channels.
- Three-phase apparent power S as measured by the first three current and voltage measuring channels.
- Frequency f.

The accuracy of measurement depends on the requirements. Basic accuracy satisfies the operating (information) needs. An additional calibration of measuring channels is necessary and must be ordered separately when the requirements on accuracy of the measurement are higher. Refer to the technical data and ordering particulars for the particular terminal.

The information on measured quantities is then available for the user at different locations:

- Locally by means of the local human-machine interface (HMI) unit.
- Locally by means of a front-connected personal computer (PC).
- Remotely over the LON bus to the station control system (SCS)
- Remotely over the SPA port to the station monitoring system (SMS).

User-defined measuring ranges

Each measuring channel has an independent measuring range from the others. This allows the users to select the most suitable measuring range for each measuring quantity on each monitored object of the power system. This gives a possibility to optimize the functionality of the power system.

Continuous monitoring of the measured quantity

Users can continuously monitor the measured quantity in each channel by means of four built-in operating thresholds (figure 120). The monitoring has two different modes of operating:

- Overfunction, when the measured current exceeds the HiWarn or HiAlarm pre-set values.
- Underfunction, when the measured current decreases under the LowWarn or LowAlarm pre-set values.

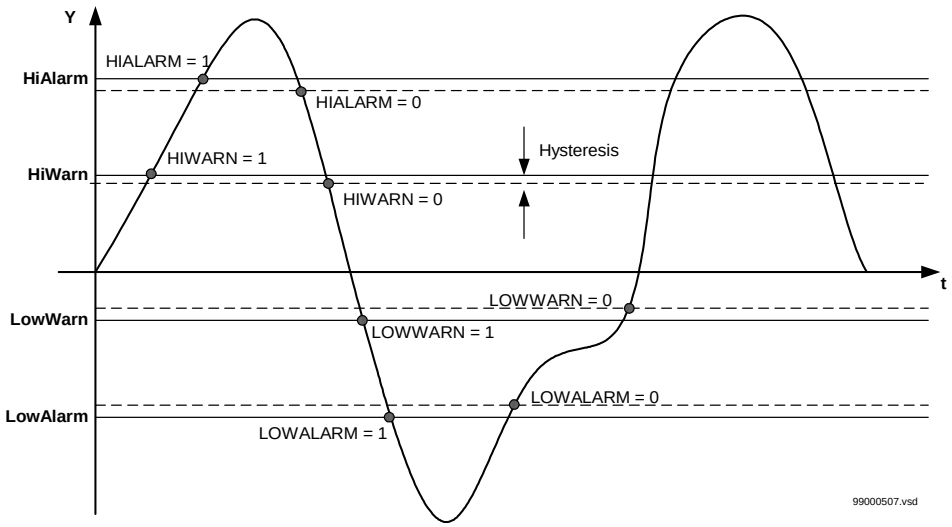

Figure 120: Presentation of the operating limits.

Each operating level has its corresponding functional output signal:

- HIWARN
- HIALARM
- LOWWARN
- LOWALARM

The logical value of the functional output signals changes according to Figure 120.

The user can set the hysteresis, which determines the difference between the operating and reset value at each operating point, in wide range for each measuring channel separately. The hysteresis is common for all operating values within one channel.

Continuous supervision of the measured quantity

The actual value of the measured quantity is available locally and remotely. The measurement is continuous for each channel separately, but the reporting of the value to the higher levels depends on the selected reporting mode. The following basic reporting modes are available:

- Periodic reporting.
- Periodic reporting with dead-band supervision in parallel.
- Periodic reporting with dead-band supervision in series.
- Dead-band reporting.

Users can select between two types of dead-band supervision:

- Amplitude dead-band supervision (ADBS).
- Integrating dead-band supervision (IDBS).

Amplitude dead-band supervision

If a measuring value is changed, compared to the last reported value, and the change is larger than the +/- ΔY predefined limits that are set by user, then the measuring channel reports the new value to a higher level, if this is detected by a new measuring sample. This limits the information flow to a minimum necessary. Figure 121 shows an example of periodic reporting with the amplitude dead-band supervision. The picture is simplified: the process is not continuous but the values are evaluated with a time interval of one second from each others.

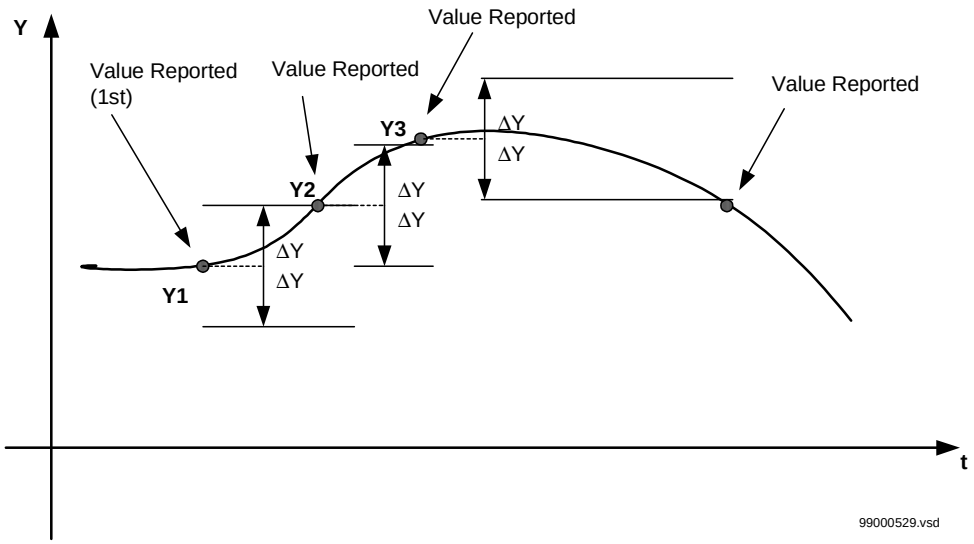

Figure 121: Amplitude dead-band supervision reporting

After the new value is reported, the +/- ΔY limits for dead-band are automatically set around it. The new value is reported only if the measured quantity changes more than defined by the +/- ΔY set limits.

Integrating dead-band supervision

The measured value is reported if the time integral of all changes exceeds the pre-set limit (figure 122), where an example of reporting with integrating dead-band supervision is shown. The picture is simplified: the process is not continuous but the values are evaluated with a time interval of one second from each other.

The last value reported (Y1 in figure 122) serves as a basic value for further measurement. A difference is calculated between the last reported and the newly measured value during new sample and is multiplied by the time increment (discrete integral). The absolute values of these products are added until the pre-set value is exceeded. This occurs with the value Y2 that is reported and set as a new base for the following measurements (as well as for the values Y3, Y4 and Y5).

The integrating dead-band supervision is particularly suitable for monitoring signals with small variations that can last for relatively long periods.

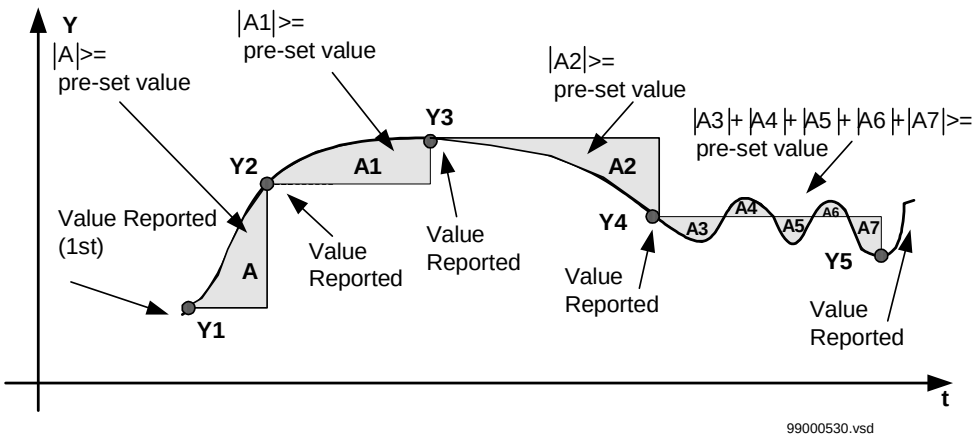

Figure 122: Reporting with integrating dead-band supervision.

Periodic reporting

The user can select the periodic reporting of measured value in time intervals between 1 and 3600 s. The measuring channel reports the value even if it has not changed for more than the set limits of amplitude or integrating dead-band supervision. To disable periodic reporting, set the reporting time interval to 0 s (figure 123).

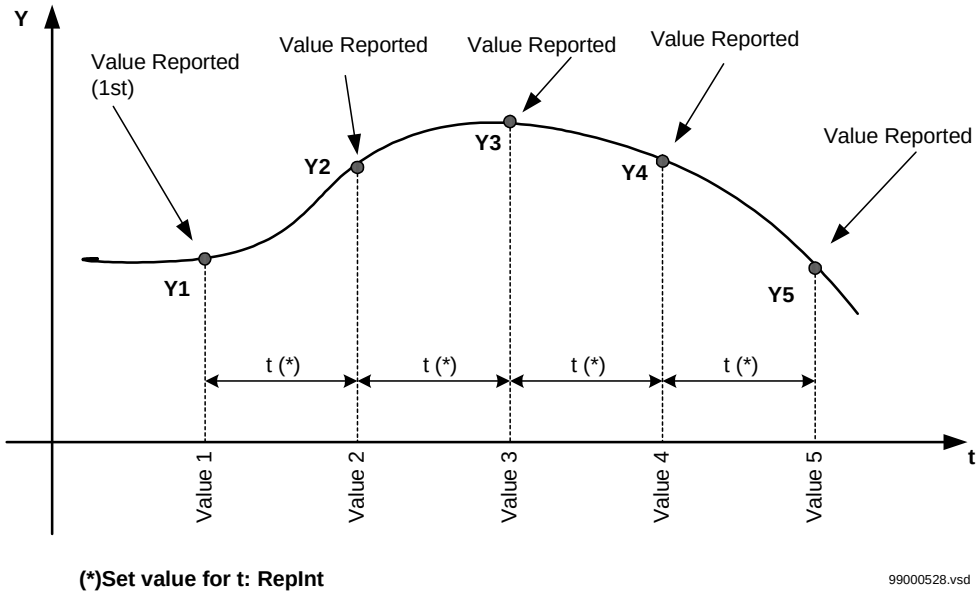

Figure 123: Periodic reporting.

Periodic reporting with parallel dead-band supervision

The newly measured value is reported:

- After each time interval for the periodic reporting expired or
- When the new value is detected by the dead-band supervision function.

The amplitude dead-band and the integrating dead-band can be selected. The periodic reporting can be set in time intervals between 1 and 3600 seconds.

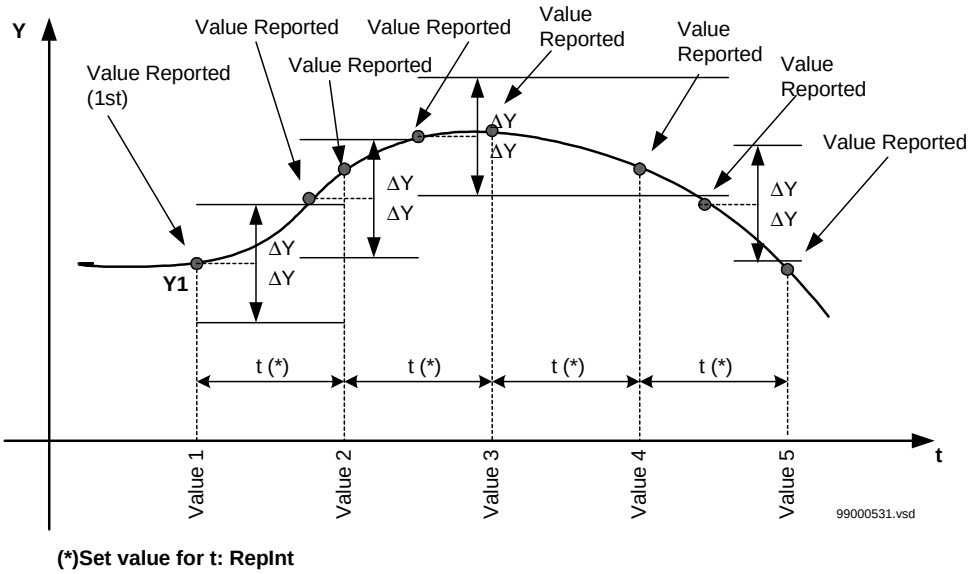

Figure 124: Periodic reporting with amplitude dead-band supervision in parallel.

Periodic reporting with serial dead-band supervision

Periodic reporting can operate serially with the dead-band supervision. This means that the new value is reported only if the set time period expired and if the dead-band limit was exceeded during the observed time (figures 125 and 126). The amplitude dead-band and the integrating dead-band can be selected. The periodic reporting can be set in time intervals between 1 and 3600 seconds.

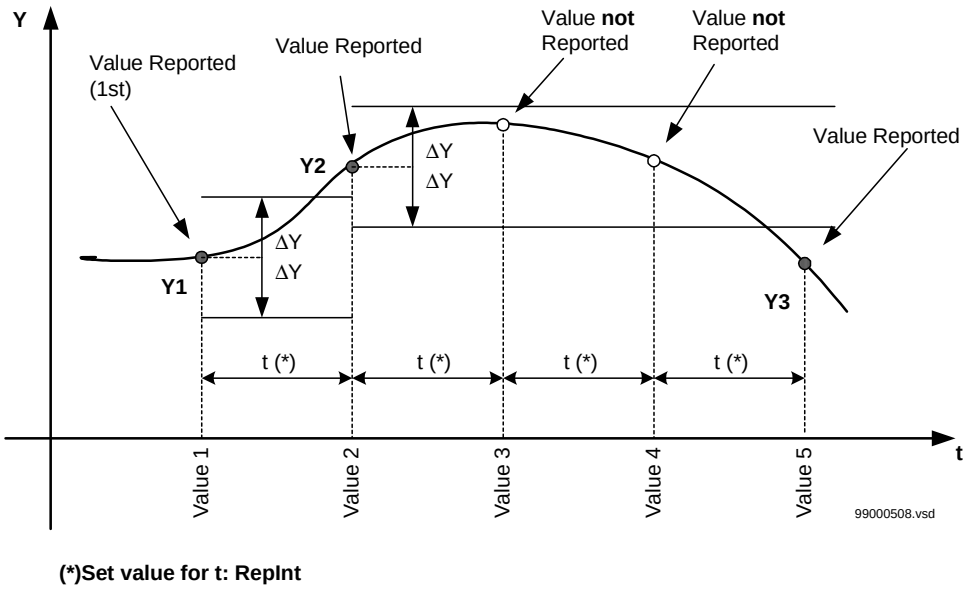

(*)Set value for t: RepInt

Figure 125: Periodic reporting with amplitude dead-band supervision in series.

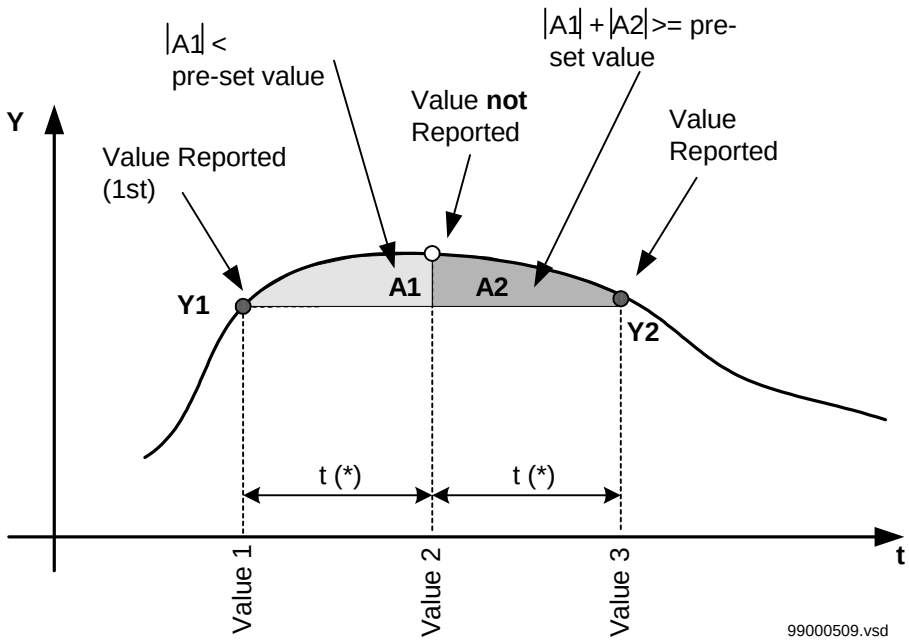

(*)Set value for t: RepInt

Figure 126: Periodic reporting with integrating dead-band supervision in series

Combination of periodic reportings

The reporting of the new value depends on setting parameters for the dead-band and for the periodic reporting. Table 17 presents the dependence between different settings and the type of reporting for the new value of a measured quantity.

Table 17: Dependence of reporting on different setting parameters:

EnDeadB*	EnlDeadB*	EnDeadBP*	RepInt*	Reporting of the new value
Off	Off	Off	0	No measured values is reported.
Off	On	On	t>0	The new measured value is reported only if the time t period expired and if, during this time, the integrating dead-band limits were exceeded (periodic reporting with integrating dead-band supervision in series).
On	Off	On	t>0	The new measured value is reported only if the time t period has expired and if, during this time, the amplitude dead-band limits were exceeded (periodic reporting with amplitude dead-band supervision in series).
On	On	On	t>0	The new measured value is reported only if the time t period expired and if at least one of the dead-band limits were exceeded (periodic reporting with dead-band supervision in series).
Off	On	Off	0	The new measured value is reported only when the integrated dead-band limits are exceeded.
On	Off	Off	0	The new measured value is reported only when the amplitude dead-band limits were exceeded.
On	On	Off	0	The new measured value is reported only if one of the dead-band limits was exceeded.
x	x	Off	t>0	The new measured value is updated at least after the time t period expired. If the dead-band supervision is additionally selected, the updating also occurs when the corresponding dead-band limit was exceeded (periodic reporting with parallel dead-band supervision).
* Please see the setting parameters in the Technical reference manual for further explanation				

6.3 Design

The design of the alternating quantities measuring function follows the design of all REx 5xx-series protection, control, and monitoring terminals that have distributed functionality, where the decision levels are placed as closely as possible to the process.

The measuring function uses the same input current and voltage signals as other protection and monitoring functions within the terminals. The number of input current and voltage transformers depends on the type of terminal and options included. The maximum possible configuration comprises five current and five voltage input channels.

Measured input currents and voltages are first filtered in analogue filters and then converted to numerical information by an A/D converter, which operates with a sampling frequency of 2 kHz.

The numerical information on measured currents and voltages continues over a serial link to one of the built-in digital signal processors (DSP). An additional Fourier filter numerically filters the received information, and the DSP calculates the corresponding values for the following quantities:

- Five input measured voltages (U1, U2, U3, U4, U5), RMS values
- Five input measured currents (I1, I2, I3, I4, I5), RMS Values
- Mean RMS value, U, of the three phase-to-phase voltages calculated from the first three phase-to-earth voltages U1, U2 and U3
- Mean RMS value, I, of the first three measured RMS values I1, I2, and I3
- Three-phase active power, P, related to the first three measured currents and voltages (I1, U1, I2, U2, I3, U3)
- Three-phase, reactive power, Q, related to the first three measured currents and voltages (I1, U1, I2, U2, I3, U3)
- Three-phase apparent power, S, related to the first three measured currents and voltages (I1, U1, I2, U2, I3, U3)
- Mean value of frequencies, f, as measured with voltages U1, U2, and U3

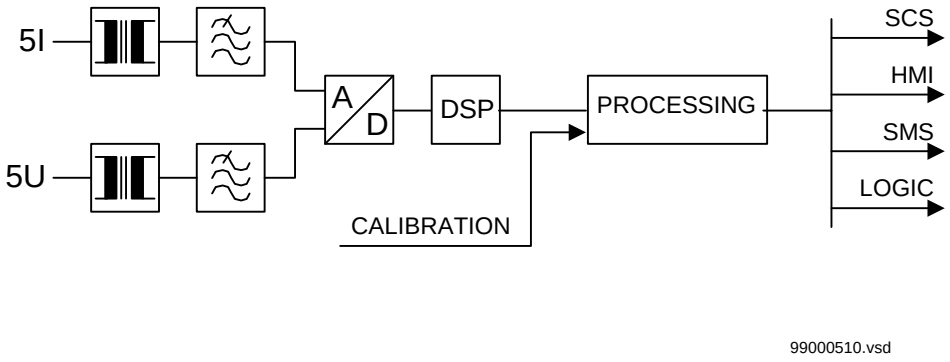

Figure 127: Simplified diagram for the function

This information is available to the user for operational purposes.

6.4 Calculations

The basic terminal parameters can be set from the HMI under the submenu:

Configuration
AnalogInputs
General
fr,CTEarth

So users can determine the rated parameters for the terminal:

- Rated frequency fr
- Position of the earthing point of the main CTs (CTEarth), which determines whether the CT earthing point is towards the protected object or the busbar

The other basic terminal parameters, related to any single analog input, can be set under the submenu:

Configuration
AnalogInputs
U1, U2, U3, U4, U5, I1, I2, I3, I4, I5, U, I, P, Q, S, f

So the users can determine the base values, the primary CTs and VTs ratios, and the user-defined names for the analog inputs of the terminal.

Under U1:

- ac voltage base value for analog input U1: U1b
- voltage transformer input U1 nominal primary to secondary scale value: U1Scale
- Name (of up to 13 characters) of the analog input U1: Name

Under U2:

- ac voltage base value for analog input U2: U2b
- voltage transformer input U2 nominal primary to secondary scale value: U2Scale
- Name (of up to 13 characters) of the analog input U2: Name

Under U3:

- ac voltage base value for analog input U3: U3b
- voltage transformer input U3 nominal primary to secondary scale value: U3Scale
- Name (of up to 13 characters) of the analog input U3: Name

Under U4:

- ac voltage base value for analog input U4: U4b
- voltage transformer input U4 nominal primary to secondary scale value: U4Scale
- Name (of up to 13 characters) of the analog input U4: Name

Under U5:

- ac voltage base value for analog input U5: U5b
- voltage transformer input U5 nominal primary to secondary scale value: U5Scale
- Name (of up to 13 characters) of the analog input U5: Name

Under I1:

- ac current base value for analog input I1: I1b
- current transformer input I1 nominal primary to secondary scale value: I1Scale
- Name (of up to 13 characters) of the analog input I1: Name

Under I2:

- ac current base value for analog input I2: I2b
- current transformer input I2 nominal primary to secondary scale value: I2Scale
- Name (of up to 13 characters) of the analog input I2: Name

Under I3:

- ac current base value for analog input I3: I3b
- current transformer input I3 nominal primary to secondary scale value: I3Scale
- Name (of up to 13 characters) of the analog input I3: Name

Under I4:

- ac current base value for analog input I4: I4b
- current transformer input I4 nominal primary to secondary scale value: I4Scale
- Name (of up to 13 characters) of the analog input I4: Name

Under I5:

- ac current base value for analog input I5: I5b
- current transformer input I5 nominal primary to secondary scale value: I5Scale
- Name (of up to 13 characters) of the analog input I5: Name

Under U:

- Name (of up to 13 characters) of the average voltage U: Name

Under I:

- Name (of up to 13 characters) of the average current I: Name

Under P:

- Name (of up to 13 characters) of the active power P: Name

Under Q:

- Name (of up to 13 characters) of the reactive power Q: Name

Under S:

- Name (of up to 13 characters) of the apparent power S: Name

Under f:

- Name (of up to 13 characters) of the frequency value f: Name

The names of the first 10 quantities automatically appears in the REVAL evaluation program for each reported disturbance.

The PST Parameter Setting Tool has to be used in order to set all remaining parameters that are related to different alternating measuring quantities.

In the settings menu it is possible to set all monitoring operating values and the hysteresis directly in the basic units of the measured quantities for each channel and for each quantity:

Settings
DisturbReport
AnalogSignals

The dead-band limits can be set directly in the corresponding units of the observed quantity for the:

- Amplitude dead-band supervision (ADBS)
- Integrating dead-band supervision (IDBS)

The IDBS area is defined by the following formula:

$$IDBS = \frac{IDeadB}{ReadFreq} = IDeadB \cdot ts$$

(Equation 171)

Where:

IDeadB	is a set operating value for IDBS in corresponding unit.
ReadFreq	is the reading frequency. It has a constant value of 1Hz.
ts = 1/ReadFreq	is the time between two samples (fixed to 1s).

The setting value for IDBS is IDeadB, and is expressed in the measuring unit of the monitored quantity (kV, A, MW, Mvar, MVA or Hz). The value is reported if the time integral area is greater than the value IDBS.

If a 0.1 Hz variation in the frequency for 10 minutes (600 s) is the event that should cause the reporting of the frequency monitored value, than the set value for IDeadB is 60 Hz.

The hysteresis can be set under the setting Hysteres.

Alarm and warning thresholds have to be set respectively under the settings HiAlarm (LowAlarm) and HiWarn (LowWarn).

See the Technical reference manual for a list of all the setting parameters.

Note!

It is important to set the time for periodic reporting and deadband in an optimized way to minimize the load on the station bus.

7 Monitoring of DC analog measurements

7.1 Application

Fast, reliable supervision of different analogue quantities is of vital importance during the normal operation of a power system. Operators in the control centres can, for example:

- Continuously follow active and reactive power flow in the network
- Supervise the busbar voltages
- Check the temperature of power transformers, shunt reactors
- Monitor the gas pressure in circuit breakers

Different measuring methods are available for different quantities. Current and voltage instrument transformers provide the basic information on measured phase currents and voltages in different points within the power system. At the same time, currents and voltages serve as the input measuring quantities to power and energy meters.

Different measuring transducers provide information on electrical and non-electrical measuring quantities such as voltage, current, temperature, and pressure. In most cases, the measuring transducers change the values of the measured quantities into the direct current. The current value usually changes within the specified mA range in proportion to the value of the measured quantity.

Further processing of the direct currents obtained on the outputs of different measuring converters occurs within different control, protection, and monitoring terminals and within the higher hierarchical systems in the secondary power system.

7.2 Functionality

The REx 5xx control, protection and monitoring terminal have a built-in option to measure and further process information from 6 up to 36 different direct current information from different measuring transducers. Six independent measuring channels are located on each independent mA input module and the REx 5xx terminals can accept from one up to six independent mA input modules, depending on the case size. Refer to the technical data and ordering particulars for the particular terminal.

Information about the measured quantities is then available to the user on different locations:

- Locally by means of the local human-machine-interface (HMI)
- Locally by means of a front-connected personal computer (PC)
- Remotely over the LON bus to the station control system (SCS)
- Remotely over the SPA port to the station monitoring system (SMS)

User-defined measuring ranges

The measuring range of different direct current measuring channels is settable by the user independent on each other within the range between -25 mA and +25 mA in steps of 0.01 mA. It is only necessary to select the upper operating limit I_Max higher than the lower one I_Min.

The measuring channel can have a value of 2 of the whole range I_Max - I_Min above the upper limit I_Max or below the lower limit I_Min, before an out-of-range error occurs. This means that with a nominal range of 0-10 mA, no out-of-range event will occur with a value between -0.2 mA and 10.2 mA.

User can this way select for each measuring quantity on each monitored object of a power system the most suitable measuring range and this way optimize a complete functionality together with the characteristics of the used measuring transducer.

Continuous monitoring of the measured quantity

The user can continuously monitor the measured quantity in each channel by means of six built-in operating limits (figure 128). Two of them are defined by the operating range selection: I_Max as the upper and I_Min as the lower operating limit. The other four operating limits operate in two different modes:

- Overfunction, when the measured current exceeds the HiWarn or HiAlarm pre-set values
- Underfunction, when the measured current decreases under the LowWarn or LowAlarm pre-set values

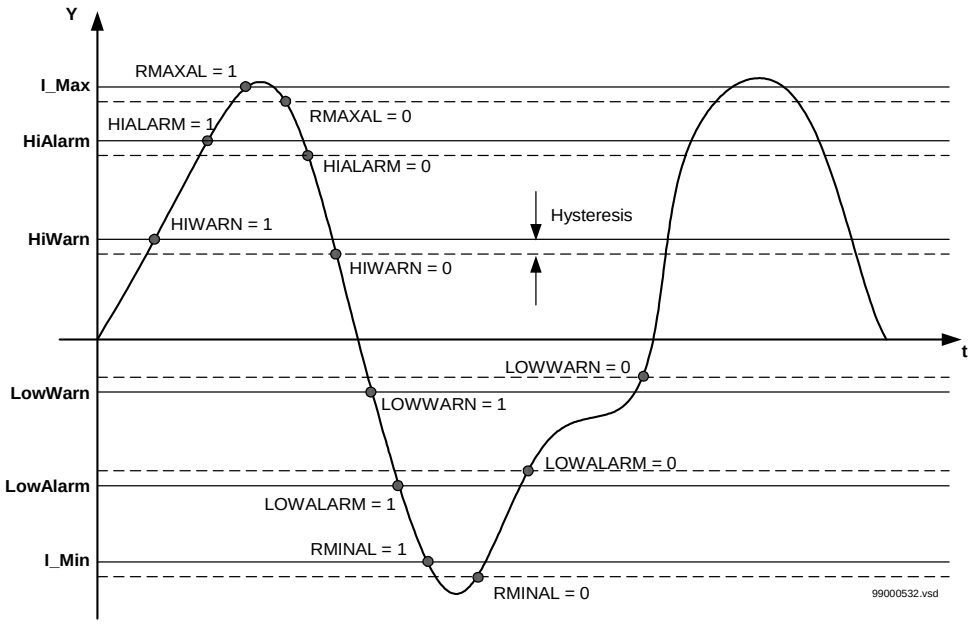

Figure 128: Presentation of the operating limits

Each operating level has its corresponding functional output signal:

- RMAXAL
- HIWARN
- HIALARM
- LOWWARN
- LOWALARM
- RMINAL

The logical value of the functional output signals changes according to figure 128.

The user can set the hysteresis, which determines the difference between the operating and reset value at each operating point, in wide range for each measuring channel separately. The hysteresis is common for all operating values within one channel.

Continuous supervision of the measured quantity

The actual value of the measured quantity is available locally and remotely. The measurement is continuous for each channel separately, but the reporting of the value to the higher levels (control processor in the unit, HMI and SCS) depends on the selected reporting mode. The following basic reporting modes are available:

- Periodic reporting
- Periodic reporting with dead-band supervision in parallel
- Periodic reporting with dead-band supervision in series
- Dead-band reporting

Users can select between two types of dead-band supervision:

- Amplitude dead-band supervision (ADBS).
- Integrating dead-band supervision (IDBS).

Amplitude dead-band supervision

If the changed value —compared to the last reported value— is larger than the +/- ΔY predefined limits that are set by users, and if this is detected by a new measuring sample, then the measuring channel reports the new value to a higher level. This limits the information flow to a minimum necessary. Figure 129 shows an example of periodic reporting with the amplitude dead-band supervision.

The picture is simplified: the process is not continuous but the values are evaluated at time intervals depending on the sampling frequency chosen by the user (SampRate setting).

After the new value is reported, the new +/- ΔY limits for dead-band are automatically set around it. The new value is reported only if the measured quantity changes more than defined by the new +/- ΔY set limits.

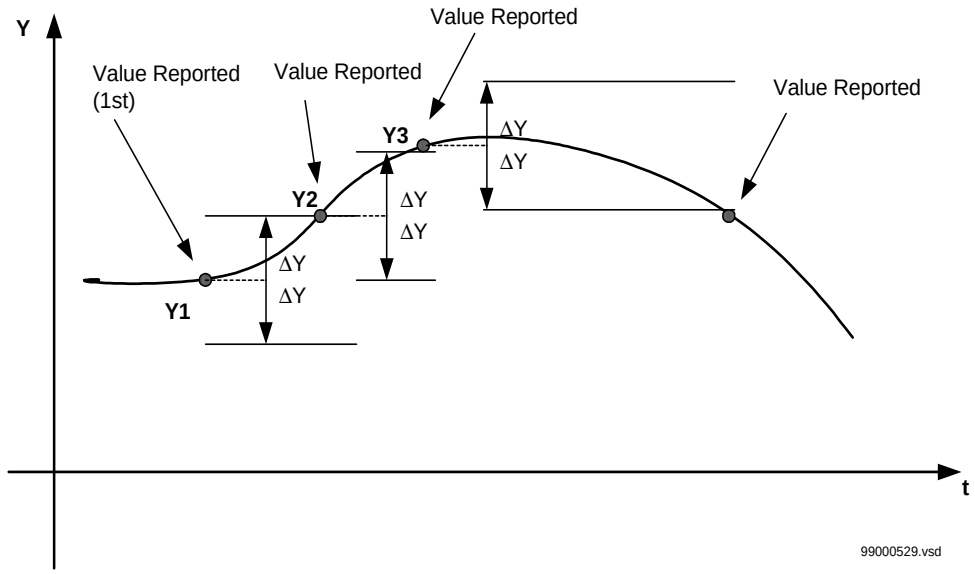

Figure 129: Amplitude dead-band supervision reporting

Integrating dead-band supervision

The measured value is updated if the time integral of all changes exceeds the pre-set limit (figure 130), where an example of reporting with integrating dead-band supervision is shown. The picture is simplified: the process is not continuous but the values are evaluated at time intervals depending on the sampling frequency chosen by the user (SampRate setting).

The last value reported (Y1 in figure 130) serves as a basic value for further measurement. A difference is calculated between the last reported and the newly measured value during new sample and is multiplied by the time increment (discrete integral). The absolute values of these products are added until the pre-set value is exceeded. This occurs with the value Y2 that is reported and set as a new base for the following measurements (as well as for the values Y3, Y4 and Y5).

The integrating dead-band supervision is particularly suitable for monitoring signals with low variations that can last for relatively long periods.

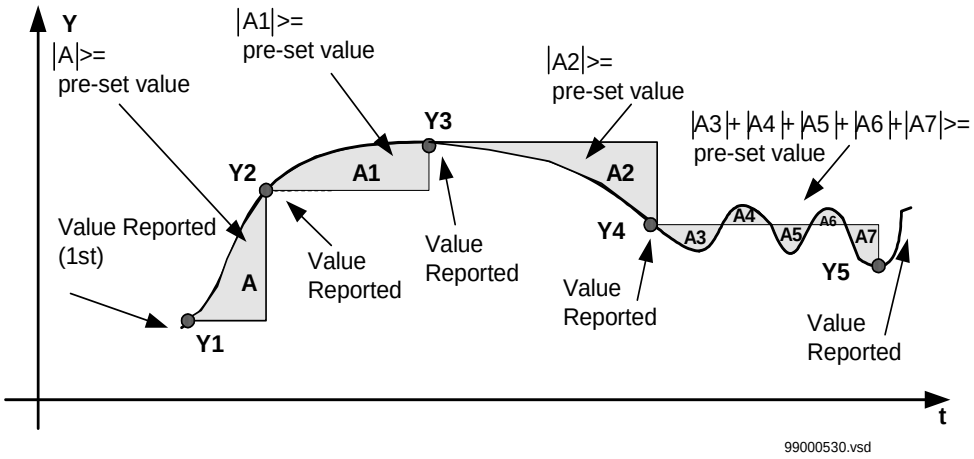

Figure 130: Reporting with integrating dead-band supervision

Periodic reporting

The user can select the periodic reporting of measured value in time intervals between 1 and 3600 s (setting RepInt). The measuring channel reports the value even if it has not changed for more than the set limits of amplitude or integrating dead-band supervision (figure 131). To disable periodic reporting, set the reporting time interval to 0 s.

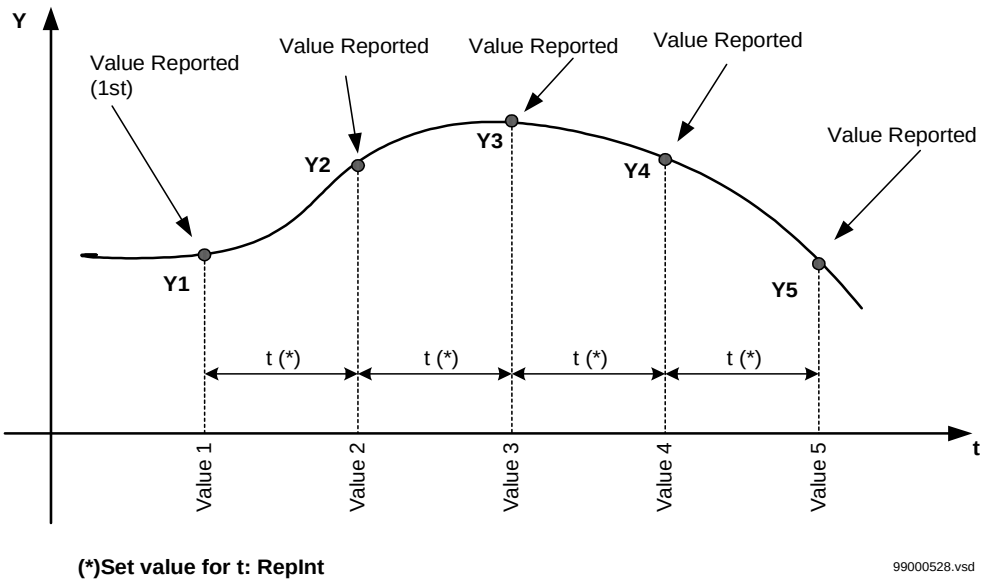

Figure 131: Periodic reporting

Periodic reporting with parallel dead-band supervision

The newly measured value is reported:

- After each time interval for the periodic reporting expired, **OR**;
- When the new value is detected by the dead-band supervision function.

The amplitude dead-band and the integrating dead-band can be selected. The periodic reporting can be set in time intervals between 1 and 3600 seconds.

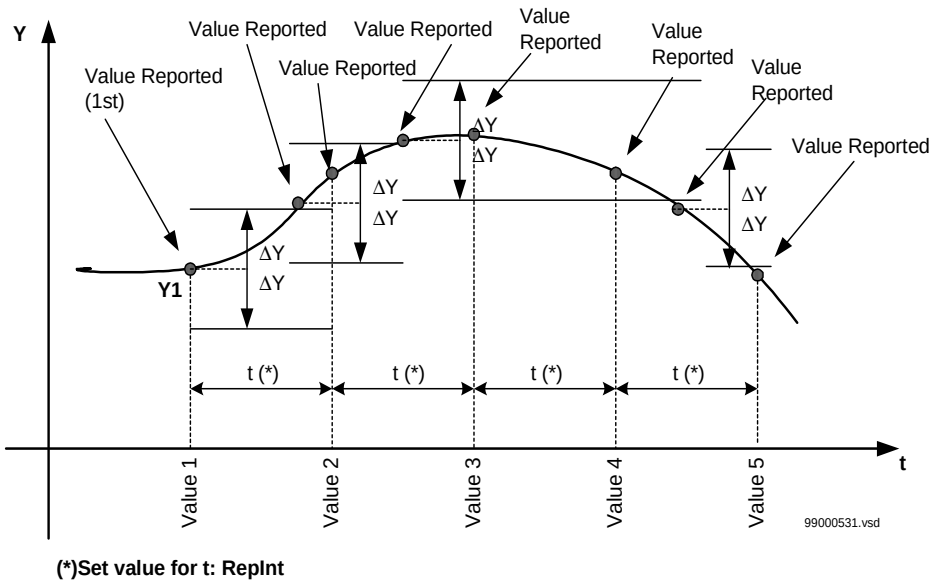

Figure 132: Periodic reporting with amplitude dead-band supervision in parallel.

Periodic reporting with serial dead-band supervision

Periodic reporting can operate serially with the dead-band supervision. This means that the new value is reported only if the set time period expired **AND** if the dead-band limit was exceeded during the observed time (figures 133 and 134). The amplitude dead-band and the integrating dead-band can be selected. The periodic reporting can be set in time intervals between 1 and 3600 seconds.

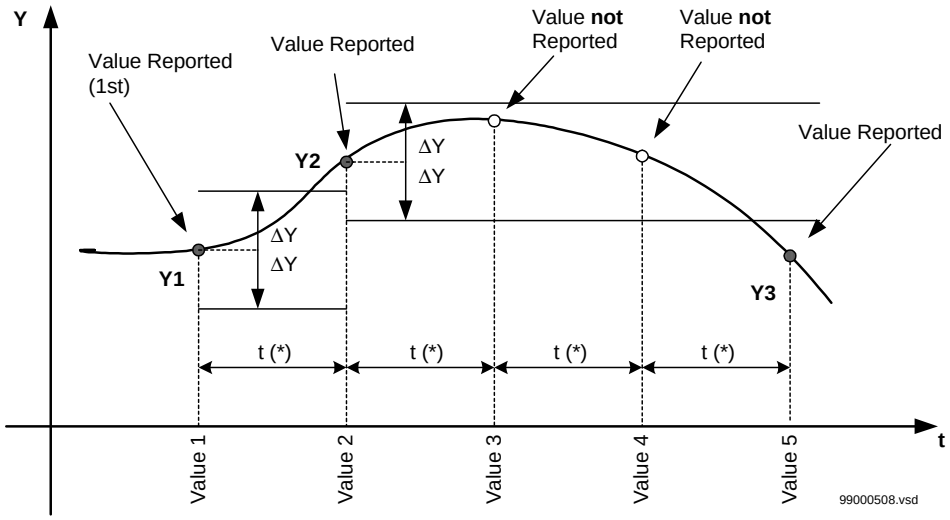

(*)Set value for t: RepInt

Figure 133: Periodic reporting with amplitude dead-band supervision in series

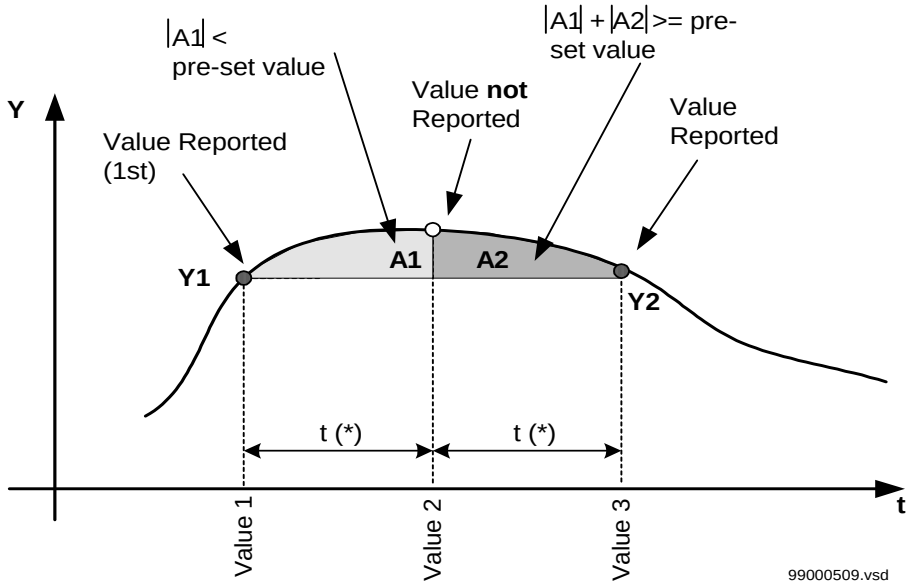

(*)Set value for t: RepInt

Figure 134: Periodic reporting with integrating dead-band supervision in series

Combination of periodic reportings

The reporting of the new value depends on setting parameters for the dead-band and for the periodic reporting. Table 1 presents the dependence between different settings and the type of reporting for the new value of a measured quantity.

Table 18: Dependence of reporting on different setting parameters:

EnDeadB *	EnIDeadB *	EnDeadBP *	RepInt *	Reporting of the new value
Off	Off	Off	0	No measured values is reported
Off	On	On	t>0	The new measured value is reported only if the time t period expired and if, during this time, the integrating dead-band limits were exceeded (periodic reporting with integrating dead-band supervision in series)
On	Off	On	t>0	The new measured value is reported only if the time t period has expired and if, during this time, the amplitude dead-band limits were exceeded (periodic reporting with amplitude dead-band supervision in series)
On	On	On	t>0	The new measured value is reported only if the time t period expired and if at least one of the dead-band limits were exceeded (periodic reporting with dead-band supervision in series)
Off	On	Off	0	The new measured value is reported only when the integrated dead-band limits are exceeded
On	Off	Off	0	The new measured value is reported only when the amplitude dead-band limits were exceeded

EnDeadB *	EnlDeadB *	EnDeadBP *	RepInt *	Reporting of the new value
On	On	Off	0	The new measured value is reported only if one of the dead-band limits was exceeded
x	x	Off	t>0	The new measured value is updated at least after the time t period expired. If the dead-band supervision is additionally selected, the updating also occurs when the corresponding dead-band limit was exceeded (periodic reporting with parallel dead-band supervision)
* Please see the setting parameters in the Technical reference manual for further explanation				

7.3 Design

The design of the mA input modules follows the design of all REx 5xx-series protection, control, and monitoring terminals that have distributed functionality, where the decision levels are placed as closely as possible to the process.

Each independent measuring module contains all necessary circuitry and functionality for measurement of six independent measuring quantities related to the corresponding measured direct currents.

On the accurate input shunt resistor (R), the direct input current (from the measuring converter) is converted into a proportional voltage signal (the voltage drop across the shunt resistor is in proportion to the measured current). Later, the voltage signal is processed within one differential type of measuring channel (figure 135).

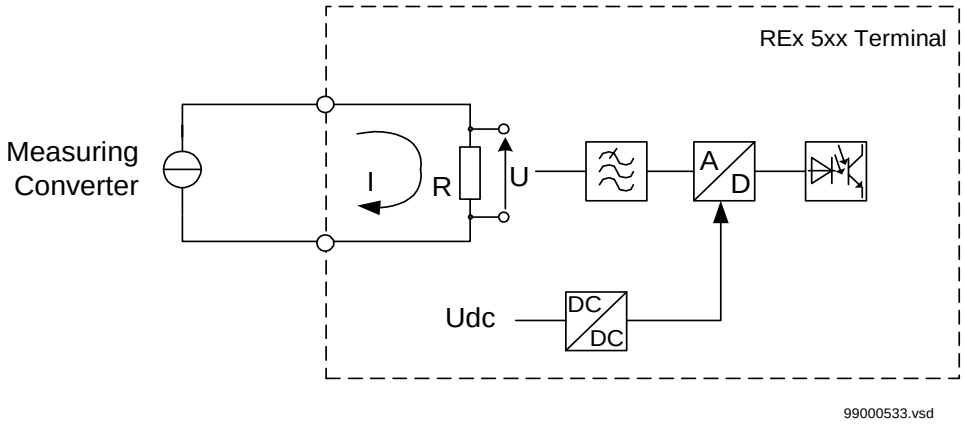

Figure 135: Simplified diagram for the function

The measured voltage is filtered by the low-pass analogue filter before entering the analogue to digital converter (A/D). Users can set the sampling frequency of the A/D converter between 5 Hz and 255 Hz to adapt to different application requirements as best as possible.

The digital information is filtered by the digital low-pass filter with the $(\sin x/x)^3$ response. The filter notch frequency automatically follows the selected sampling frequency. The relation between the frequency corresponding to the suppression of -3 dB and the filter notch frequency corresponds to the equation:

$$f_{-3dB} = 0,262 \cdot f_{notch}$$

(Equation 172)

Using optocouplers and DC/DC conversion elements that are used separately for each measuring channel, the input circuitry of each measuring channel is galvanically separated from:

- The internal measuring circuits
- The control microprocessor on the board

A microprocessor collects the digitized information from each measuring channel. The microprocessor serves as a communication interface to the main processing module (MPM).

All processing of the measured signal is performed on the module so that only the minimum amount of information is necessary to be transmitted to and from the MPM. The measuring module receives information from the MPM on setting and the command parameters; it reports the measured values and additional information—according to needs and values of different parameters.

Each measuring channel is calibrated very accurately during the production process. The continuous internal zero offset and full-scale calibration during the normal operation is performed by the A/D converter. The calibration covers almost all analogue parts of the A/D conversion, but neglects the shunt resistance.

Each measuring channel has built in a zero-value supervision, which greatly rejects the noise generated by the measuring transducers and other external equipment. The value of the measured input current is reported equal to zero (0) if the measured primary quantity does not exceed +/-0.5% of the maximum measuring range.

The complete measuring module is equipped with advanced self-supervision. Only the outermost analogue circuits cannot be monitored. The A/D converter, optocouplers, digital circuitry, and DC/DC converters, are all supervised on the module. Over the CAN bus, the measuring module sends a message to the MPM for any detected errors on the supervised circuitry.

7.4 Calculations

The PST Parameter Setting Tool has to be used in order to set all the parameters that are related to different DC analogue quantities.

Users can set the 13 character name for each measuring channel.

All the monitoring operating values and the hysteresis can be set directly in the mA of the measured input currents from the measuring transducers.

The measured quantities can be displayed locally and/or remotely according to the corresponding modules that are separately set for each measuring channel by the users (five characters).

The relation between the measured quantity in the power system and the setting range of the direct current measuring channel corresponds to this equation:

$$Value = ValueMin + (I - IMin) \cdot \frac{ValueMax - ValueMin}{IMax - IMin}$$

(Equation 173)

Where:

I_Min	is the set value for the minimum operating current of a channel in mA.
I_Max	is the set value for the maximum operating current of a channel in mA.
ValueMin	is the value of the primary measuring quantity corresponding to the set value of minimum operating current of a channel, I_Min.
ValueMax	is the value of the primary measuring quantity corresponding to the set value of maximum operating current of a channel, I_Max.
Value	is the actual value of the primary measured quantity.

Figure 136 shows the relationship between the direct mA current I and the actual value of the primary measured quantity, Value.

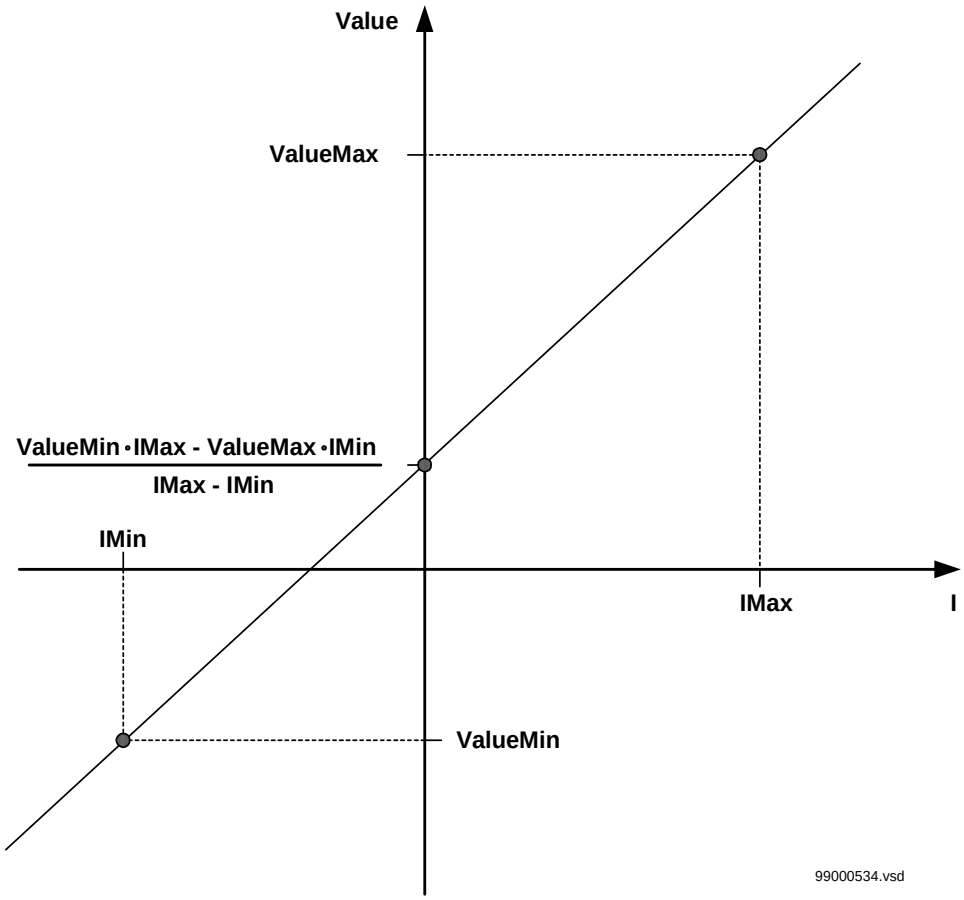

Figure 136: Relationship between the direct current (I) and the measured quantity primary value (Value)

The dead-band limits can be set directly in the mA of the input direct current for:

- Amplitude dead-band supervision ADBS
- Integrating dead-band supervision IDBS

The IDBS area [mAs] is defined by the following equation:

$$IDBS = \frac{IDeadB}{SampRate} = IDeadB \cdot ts$$

(Equation 174)

where:

IDeadB	is the set value of the current level for IDBS in mA.
SampRate	is the sampling rate (frequency) set value, in Hz.
ts = 1/SampRate	is the time between two samples in s.

If a 0.1 mA variation in the monitored quantity for 10 minutes (600 s) is the event that should cause the trigger of the IDBS monitoring (reporting of the value because of IDBS threshold operation) and the sampling frequency (SampRate) of the monitored quantity is 5 Hz, than the set value for IDBS (IDeadB) will be 300 mA:

$$IDBS = 0.1 \cdot 600 = 60[mA\ s]$$

(Equation 175)

$$IDeadB = IDBS \cdot SampRate = 60 \cdot 5 = 300[mA]$$

(Equation 176)

The polarity of connected direct current input signal can be changed by setting the ChSign to On or Off. This way it is possible to compensate by setting the possible wrong connection of the direct current leads between the measuring converter and the input terminals of the REx 5xx series unit.

The setting table lists all setting parameters with additional explanation.

Note:

It is important to set the time for periodic reporting and deadband in an optimized way to minimize the load on the station bus.

Chapter 11 Data communication

About this chapter

This chapter describes the data communication and the associated hardware.

1 Serial communication

1.1 Application

The serial communication can be used for different purposes, which enable better access to the information stored in the terminals. The serial communication is also used for communication directly between terminals (bay-to-bay communication).

The serial communication can be used with a station monitoring system (SMS) or with a substation control system (SCS). Normally, SPA communication is used for SMS and SCS; LON communication is used for SCS. Additionally, LON communication can also be used for SMS 510. SPA communication is also applied when using the front communication port, but for this purpose, no special serial communication function is required in the terminal. Only the software in the PC and a special cable for front connection is needed.

The rear SPA-port can alternatively be set up for IEC 60870-5-103 communication. IEC 60870-5-103 is a standard protocol for protection functions.

2 Serial communication, SPA

2.1 Application

The SPA communication is mainly used for SMS. It can include different numerical relays/terminals with remote communication possibilities. Connection to a personal computer (PC) can be made directly (if the PC is located in the substation) or by telephone modem through a telephone network with CCITT characteristics.

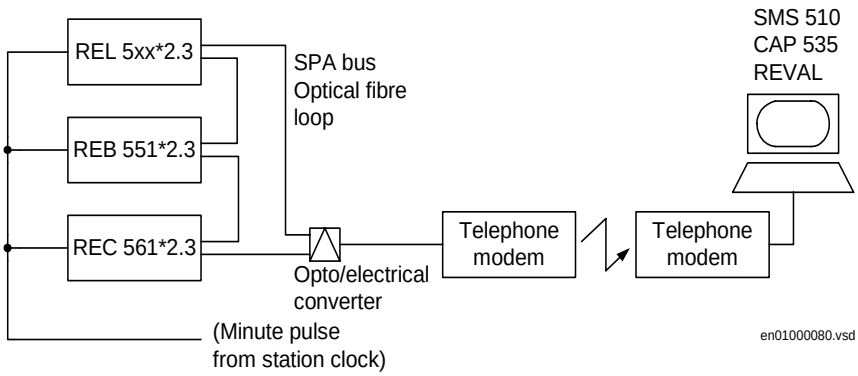

Figure 137: Example of SPA communication structure for a station monitoring system

2.2 Functionality

The SPA protocol V2.5 is an ASCII-based protocol for serial communication. The communication is based on a master-slave principle, where the terminal is a slave and the PC is the master. Only one master can be applied on each optic fibre loop. A program is needed in the master computer for interpretation of the SPA-bus codes and for translation of the settings sent to the terminal.

2.3 Design

When communicating locally with a Personal Computer (PC) in the station, using the rear SPA port, the only hardware needed for a station monitoring system is:

- Optical fibres
- Opto/electrical converter fo the PC
- PC

When communicating remotely with a PC using the rear SPA port, the same hardware is needed plus telephone modems.

The software needed in the PC, either local or remote, is:

- CAP 535 (Ver. 1.0 or higher) for configuration and parameter setting
- SMS 510 (Ver 1.0 or higher) for reading of disturbance records, events, distance to fault and trip value settings
- REVAL (Ver 2.0 or higher) for evaluation of the disturbance recorder data

When communicating to a front-connected PC, the only hardware required is the special front-connection cable. The software needed in a front connected PC is:

- CAP 535 (Ver. 1.0 or higher) for configuration and parameter setting
- SMS 510 (Ver 1.0 or higher) for reading of disturbance records, events, distance to fault and trip value settings
- REVAL (Ver 2.0 or higher) is also required if the same PC is used for evaluation of the disturbance recorder data.

2.4 Calculations

The SPA and the IEC use the same rear communication port. To define the protocol to be used, a setting is done on the local HMI under the menu:

Configuration
TerminalCom
SPA-IECPort

When the type of communication protocol is defined, the power to the terminal has to be switched off and on.

The most important settings in the terminal for SPA communication are the slave number and baud rate (communication speed). These settings are absolutely essential for all communication contact to the terminal.

These settings can only be done on the local HMI for rear channel communication at:

Configuration
TerminalCom
SPACOMM
Rear

and for front connection at:

Configuration
TerminalCom
SPACOMM
Front

The slave number can be set to any value from 1 to 899, as long as the slave number is unique within the used SPA loop.

The baud rate, which is the communication speed, can be set to between 300 and 38400 bits/s. The baud rate should be the same for the whole station, although different baud rates in a loop are possible. If different baud rates in the same fibre optical loop are used, consider this when making the communication setup in the communication master, the PC. The maximum baud rate of the front connection is limited to 9600 bit/s.

For local communication, 19200 or 38400 bit/s is the normal setting. If telephone communication is used, the communication speed depends on the quality of the connection and on the type of modem used. But remember that the terminal does not adapt its speed to the actual communication conditions, because the speed is set on the HMI of the terminal.

3 Serial communiction, IEC

3.1 Application

The IEC 60870-5-103 communication protocol is mainly used when a protection terminal communicates with a third party control or monitoring system. This system must have a software that can interpret the IEC 60870-5-103 communication messages.

3.2 Functionality

The IEC 60870-5-103 is an unbalanced (master-slave) protocol for coded-bit serial communication exchanging information with a control system. In IEC terminology a primary station is a master and a secondary station is a slave. The communication is based on a point to point principle. The master must have a software that can interpret the IEC 60870-5-103 communication messages. For detailed information about IEC 60870-5-103, refer to the IEC60870 standard part 5: Transmission protocols, and to the section 103: Companion standard for the informative interface of protection equipment.

3.3 Design

General

The protocol implementation in REx 5xx consists of the following functions:

- Event handling
- Report of analog service values (measurands)
- Fault location
- Command handling
  - Autorecloser ON/OFF
  - Teleprotection ON/OFF
  - Protection ON/OFF
  - LED reset
  - Characteristics 1 - 4 (Setting groups)
- File transfer (disturbance files)
- Time synchronization

Hardware

When communicating locally with a Personal Computer (PC) or a Remote Terminal Unit (RTU) in the station, using the SPA/IEC port, the only hardware needed is:

- Optical fibres, glass/plastic
- Opto/electrical converter for the PC/RTU
- PC/RTU

Events

The events created in the terminal available for the IEC 60870-5-103 protocol are based on the event function blocks EV01 - EV06. These function blocks include the function type and the information number for each event input, which can be found in the IEC-document. See also the description of the Event function.

Measurands

The measurands can be included as type 3.1, 3.2, 3.3, 3.4 and type 9 according to the standard.

Fault location

The fault location is expressed in reactive ohms. In relation to the line length in reactive ohms, it gives the distance to the fault in percent. The data is available and reported when the fault locator function is included in the terminal.

Commands

The commands defined in the IEC 60870-5-103 protocol are represented in a dedicated function block. This block has output signals according to the protocol for all available commands.

File transfer

The file transfer functionality is based on the Disturbance recorder function. The analog and binary signals recorded will be reported to the master. The eight last disturbances, that are recorded, are available for transfer to the master. A file that has been transferred and acknowledged by the master it cannot be transferred again.

The binary signals, that are reported, are those that are connected to the disturbance function blocks DRP1 - DRP3. These function blocks include the function type and the information number for each signal. See also the description of the Disturbance report.

The analog channels, that are reported, are the first four current inputs and the first four voltage inputs.

3.4 Calculations

Settings from the local HMI

The SPA and the IEC use the same rear communication port. To define the protocol to be used, a setting is done on the local HMI under the menu:

Configuration
TerminalCom
SPA-IECPort

When the type of communication protocol is defined, the power to the terminal has to be switched off and on.

The settings for IEC 60870-5-103 communication are the following:

- Individually blocking of commands
- Setting of measurand type
- Setting of main function type and activation of main function type
- Settings for slave number and baud rate (communication speed)
- Command for giving Block of information command

The settings for individually blocking of commands can be found on the local HMI at:

Configuration
TerminalCom
IECCom
Commands

Each command has its own blocking setting and the state can be set to OFF or ON. The OFF state corresponds to non-blocked state and ON corresponds to blocked state.

The settings for type of measurand can be found on the local HMI at:

Configuration
TerminalCom
IECCom
Measurands

The type of measurands can be set to report standardised types, Type 3.1, Type 3.2, Type 3.3, Type 3.4 or Type 9.

The use of main function type is to facilitate the engineering work of the terminal. The settings for main function type and the activation of main function type can be found on the local HMI at:

Configuration
TerminalCom
IECCom
FunctionType

The main function type can be set to values according to the standard, this is, between 1 and 255. The value zero is used as default and corresponds to not used.

The setting for activation of main function type can be set to OFF or ON. The OFF state corresponds to non-activated state and ON corresponds to activated state. Upon activated the main function type overrides all other settings for function type within the terminal, that is, function type settings for event function and disturbance recorder function. When set to OFF, function type settings for event function and disturbance recorder function use their own function type settings made on the function blocks for the event function and disturbance recorder respectively. Though for all other functions they use the main function type even when set to OFF.

The settings for communication parameters slave number and baud rate can be found on the local HMI at:

Configuration
TerminalCom
IECCom
Communication

The slave number can be set to any value between 0 to 255.

The baud rate, the communication speed, can be set either to 9600 bits/s or 19200 bits/s.

The settings for issuing a block-of-information command can be found on the local HMI at:

Configuration
TerminalCom
IECCom
BlockOfInfo

Information command with the value one (1) blocks all information sent to the master and abort any GI procedure or any file transfer in process. Thus issuing the command with the value set to zero (0) will allow information to be polled by the master.

The dialogue to operate the output from the BlockOfInformation command function is performed from different state as follows:

1. Selection active; select the:
   - C button, and then the No box activates.
   - Up arrow, and then New: 0 changes to New: 1. The up arrow changes to the down arrow.
   - E button, and then the Yes box activates.

2. Yes box active; select the:
   - C button to cancel the action and return to the BlockOfInfo window.
   - E button to confirm the action and return to the BlockOfInfo window.
   - Right arrow to activate the No box.

3. No box active; select the:
   - C button to cancel the action and return to the BlockOfInfo window.
   - E button to confirm the action and return to the BlockOfInfo window.
   - Left arrow to activate the Yes box.

Settings from the CAP 535 tool

Event

For each input of the Event function there is a setting for the information number of the connected signal. The information number can be set to any value between 0 and 255. In order to get proper operation of the sequence of events the event masks in the event function shall be set to ON_CHANGE. For single-command signals, the event mask shall be set to ON_SET.

In addition there is a setting on each event block for function type. Refer to description of the Main Function type set on the local HMI.

Commands

As for the commands defined in the protocol there is a dedicated function block with eight output signals. The configuration of these signals are made by using the CAP 531 tool.

To realise the BlockOfInformation command, which is operated from the local HMI, the output BLKINFO on the IEC command function block ICOM has to be connected to an input on an event function block. This input shall have the information number 20 (monitor direction blocked) according to the standard.

File transfer

For each input of the Disturbance recorder function there is a setting for the information number of the connected signal. The information number can be set to any value between 0 and 255.

Furthermore there is a setting on each input of the Disturbance recorder function for the function type. Refer to description of Main Function type set on the local HMI.

4 Serial communication, LON

4.1 Application

An optical network can be used within the Substation Automation system. This enables communication with the terminal through the LON bus from the operator's workplace, from the control center and also from other terminals.

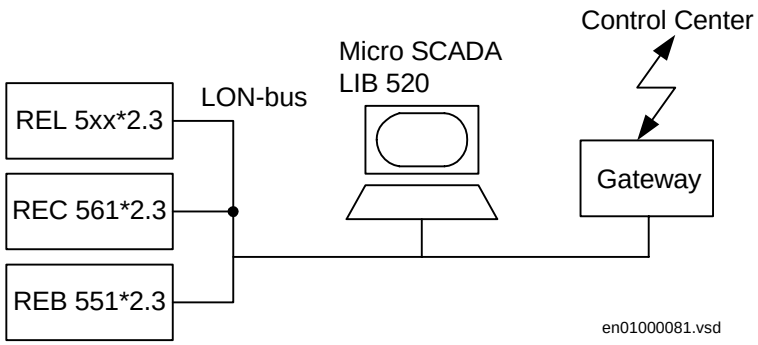

Figure 138: Example of LON communication structure for substation automation

4.2 Functionality

The LON protocol is specified in the LonTalkProtocol Specification Version 3 from Echelon Corporation. This protocol is designed for communication in control networks and is a peer-to-peer protocol where all the devices connected to the network can communicate with each other directly. For more information of the bay-to-bay communication, refer to the documents Event function and Multiple command function.

4.3 Design

The hardware needed for applying LON communication depends on the application, but one very central unit needed is the LON Star Coupler and optical fibres connecting the star coupler to the terminals. To communicate with the terminals from MicroSCADA, the application library LIB 520 is needed.

The HV/Control and the HV/REx 500 software modules are included in the LIB 520 high-voltage process package, which is a part of the Application Software Library within MicroSCADA applications.

The HV/Control software module is intended to be used for control functions in REx 5xx terminals. This module contains the process picture, dialogues and process database for the control application in the MicroSCADA.

The HV/REx 500 software module is used for setting and monitoring of the terminal via the MicroSCADA screen. At use of this function the PST Parameter Setting Tool (of v1.1 or higher) is required.

4.4 Calculations

Use the LNT, LON Network Tool to set the LON communication. This is a software tool applied as one node on the LON bus. In order to communicate via LON, the terminals need to know which node addresses the other connected terminals have, and which network variable selectors should be used. This is organised by the LNT.

The node address is transferred to the LNT via the local HMI at:

Configuration
TerminalCom
LONComm
ServicePinMsg

By setting YES, the node address is sent to the LNT via the LON bus. Or, the LNT can scan the network for new nodes.

The speed of the LON bus is set to the default of 1.25 MHz. This can be changed by the LNT.

If the LON communication from the terminal stops, caused by setting of illegal communication parameters (outside the setting range) or by another disturbance, it is possible to reset the LON port of the terminal. This is performed at the local HMI at:

Configuration
TerminalCom
LONComm
LONDefault

By setting YES, the LON communication is reset in the terminal, and the addressing procedure can start from the beginning again.

There are a number of session timers which can be set via the local HMI. These settings are only for advanced use and should only be changed after recommendation from ABB Automation Products AB. The time values below are the default settings. The settings can be found at:

Configuration
TerminalCom
LONComm
SessionTimers

5 Serial communication modules (SCM)

5.1 SPA/IEC

The serial communication module for SPA/IEC is placed in a slot at the rear part of the main processing module. The serial communication module can have connectors for two plastic fibre cables or two glass fibre cables. The incoming optical fibre is connected to the RX receiver input and the outgoing optical fibre to the TX transmitter output. Pay special attention to the instructions concerning the handling, connection, etc. of the optical fibres.

5.2 LON

The serial communication module for LON is placed in a slot at the rear part of the Main processing module. The serial communication module can have connectors for two plastic fibre cables or two glass fibre cables. The incoming optical fibre is connected to the RX receiver input and the outgoing optical fibre to the TX transmitter output. Pay special attention to the instructions concerning the handling, connection, etc. of the optical fibres.

Chapter 12 Hardware modules

About this chapter

This chapter describes the different hardware modules.

1 Platform

1.1 General

The REx 5xx platform consists of a case, hardware modules and a set of basic functions.

The closed and partly welded steel case makes it possible to fulfill stringent EMC requirements. Three different sizes of the case are available to fulfill the space requirements of different terminals. The degree of protection is IP 40 according to IEC 529 for cases with the widths 1/2x19” and 3/4x19”. For case size 1/1x19” IP 30 applies for the top and bottom part. IP 54 can be obtained for the front area with accessories for flush and semiflush mounting. Mounting kits are available for rack, flush, semiflush or wall mounting.

All connections are made on the rear of the case. Screw compression type terminal blocks are used for electrical connections. Serial communication connections are made by optical fibre connectors type Hewlett Packard (HFBR) for plastic fibres or bayonet type ST for glass fibres

A set of hardware modules are always included in a terminal. Application specific modules are added to create a specific terminal type or family.

The basic functions provide a terminal with basic functionality such as self supervision, I/O-system configurator, real time clock and other functions to support the protection and control system of a terminal.

1.2 Platform configuration

Table 19: Basic, always included, modules

Module	Description
Combined backplane module (CBM)	Carries all internal signals between modules in a terminal. The size of the module depends on the size of the case. 1/1x19”: 13 slots available for I/O. 3/4x19”: 8 slots available for I/O. 1/2x19”: 3 slots available for I/O.
Power supply module (PSM)	Available in two different versions, each including a regulated DC/DC converter that supplies auxiliary voltage to all static circuits. • For case size 1/2x19” and 3/4x19” a version with four binary inputs and four binary outputs are used. An internal fail alarm output is also available. PSM output power 20W. • For case size 1/1x19” a version without binary I/O:s and increased output power is used. An internal fail alarm output is available. PSM output power 30W.
Main processing module (MPM)	Module for overall application control. All information is processed or passed through this module, such as configuration, settings and communication.
Human machine interface (LCD-HMI)	The module consist of LED:s, a LCD, push buttons and an optical connector for a front connected PC

Table 20: Application specific modules

Module	Description
Signal processing module (SPM)	Module for protection algorithm processing. Carries up to 12 digital signal processors, performing all measuring functions.
Milliampere input module (MIM)	Analog input module with 6 independent, galvanically separated channels.
Binary input module (BIM)	Module with 16 optically isolated binary inputs
Binary output module (BOM)	Module with 24 single outputs or 12 double-pole command outputs including supervision function
Binary I/O module (IOM)	Module with 8 optically isolated binary inputs, 10 outputs and 2 fast signalling outputs.
Data communication modules (DCMs)	Modules used for digital communication to remote terminal.
Transformer input module (TRM)	Used for galvanic separation of voltage and/or current process signals and the internal circuitry.
A/D conversion module (ADM)	Used for analog to digital conversion of analog process signals galvanically separated by the TRM.
Optical receiver module (ORM)	Used to interface process signals from optical instrument transformers.
Serial communication module (SCM)	Used for SPA/LON/IEC communication
LED module (LED-HMI)	Module with 18 user configurable LEDs for indication purposes

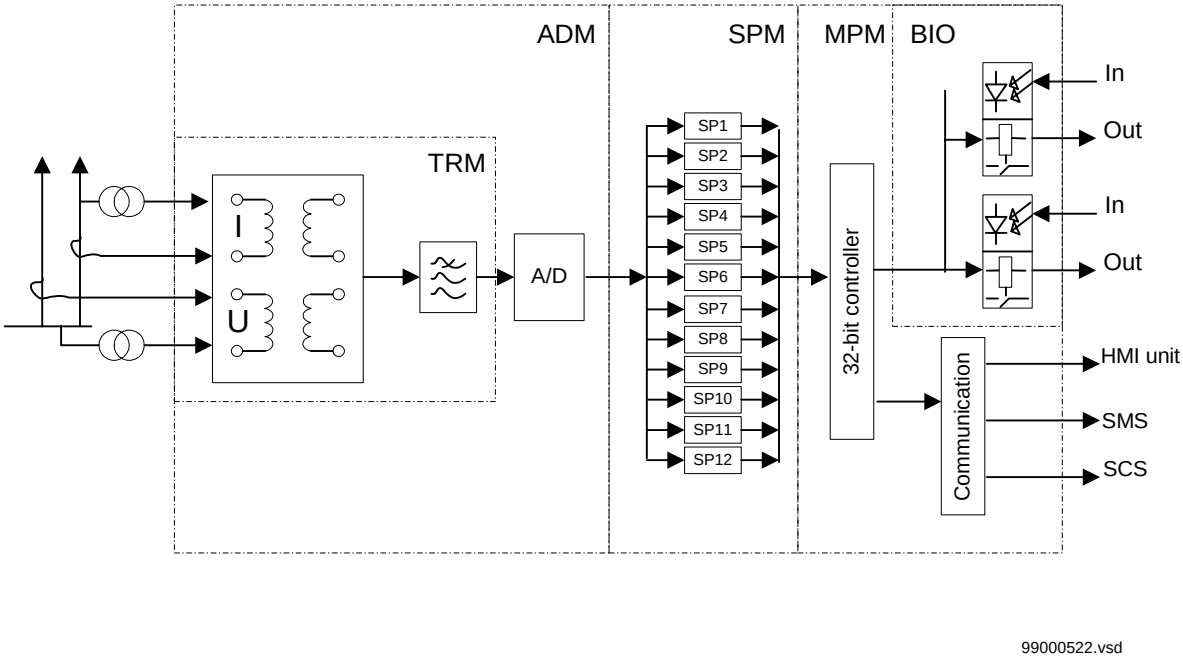

Figure 139: Basic block diagram

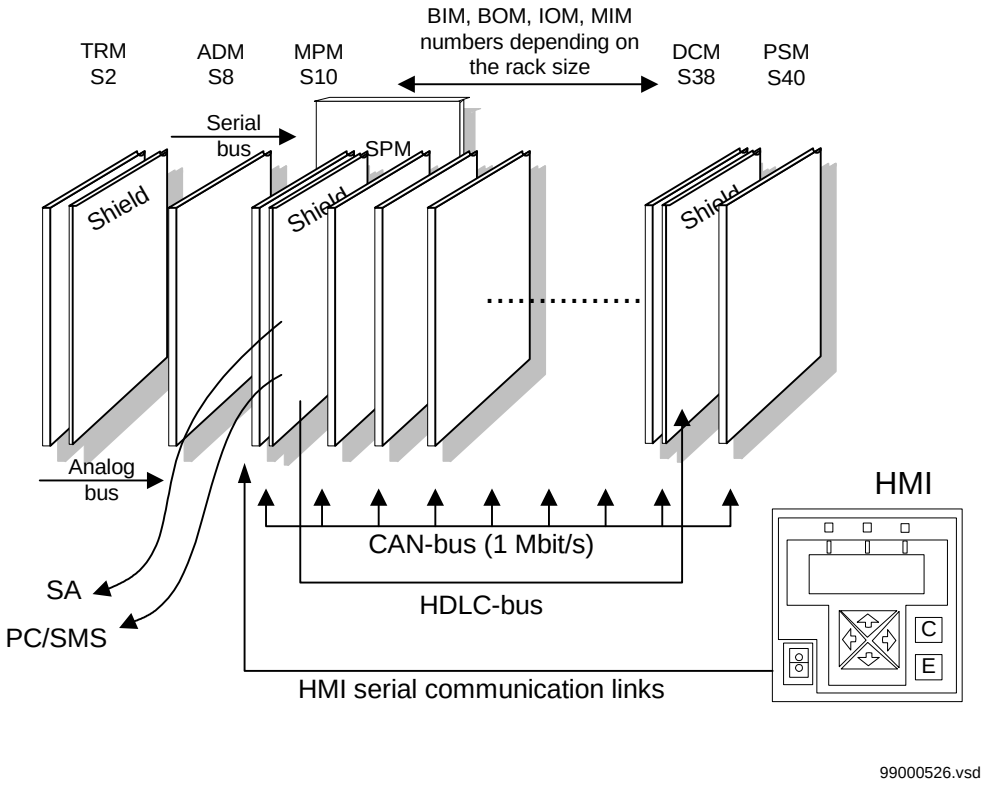

Figure 140: Internal hardware structure showing a full width case configuration

1.3 1/2x19" platform

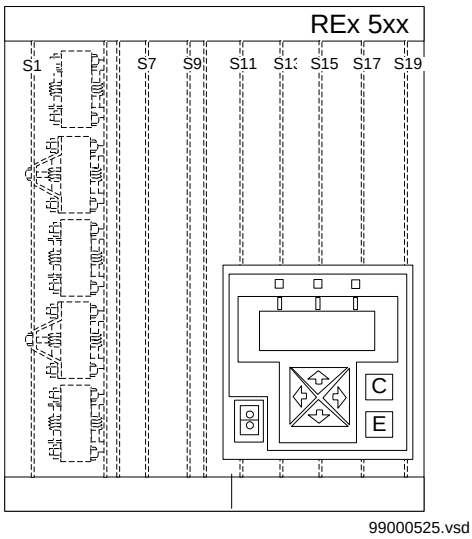

Figure 141: Hardware structure of the 1/2x19” case

2 Transformer input module (TRM)

Current and voltage input transformers form an insulating barrier between the external wiring and internal circuits of the terminal. They adapt the values of the measuring quantities to the static circuitry and prevent the disturbances to enter the terminal. Maximum 10 analog input quantities can be connected to the transformer module (TRM). A TRM with maximum number of transformers has:

- Five voltage transformers. The rated voltage is selected at order.
- Five current transformers. The rated currents are selected at order.

The input quantities are the following:

- Three phase currents
- Residual current of the protected line
- Residual current of the parallel circuit (if any) for compensation of the effect of the zero sequence mutual impedance on the fault locator measurement or residual current of the protected line but from a parallell core used for CT circuit supervision function or independent earthfault function.
- Three phase voltages
- Open delta voltage for the protected line (for an optional directional earth-fault protection)
- Phase voltage for an optional synchronism and energizing check.

The actual configuration of the TRM depends on the type of terminal and included functions. See figure 142 and figure 143.

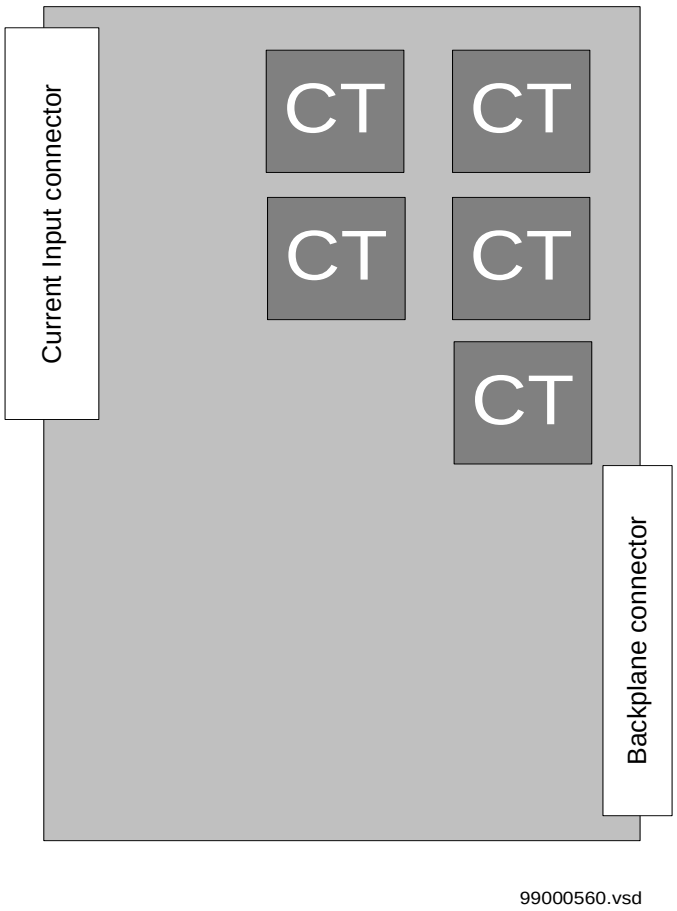

Figure 142: Block diagram of the TRM for REL 551, Line differential protection

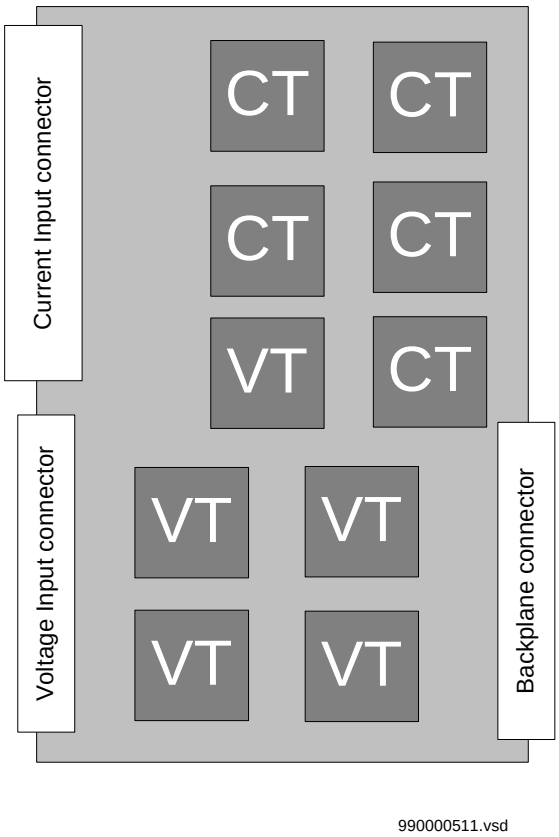

Figure 143: Block diagram of the TRM with maximum number of transformers used in most REx 5xx.

3 A/D-conversion module (ADM)

The incoming signals from the intermediate current transformers are adapted to the electronic voltage level with shunts. To gain dynamic range for the current inputs, two shunts with separate A/D channels are used for each input current. By that a 16-bit dynamic range is obtained with a 12 bits A/D converter.

The next step in the signal flow is the analogue filter of the first order, with a cut-off frequency of 500 Hz. This filter is used to avoid aliasing problems.

The A/D converter has a 12-bit resolution. It samples each input signal (5 voltages and 2x5 currents) with a sampling frequency of 2 kHz.

Before the A/D-converted signals are transmitted to the signal processing module, the signals are band-pass filtered and down-sampled to 1 kHz in a digital signal processor (DSP).

The filter in the DSP is a numerical filter with a cut-off frequency of 250 Hz.

The transmission of data between the A/D-conversion module and the signal processing module is done on a supervised serial link of RS485 type. This transmission is performed once every millisecond and contains information about all incoming analog signals.

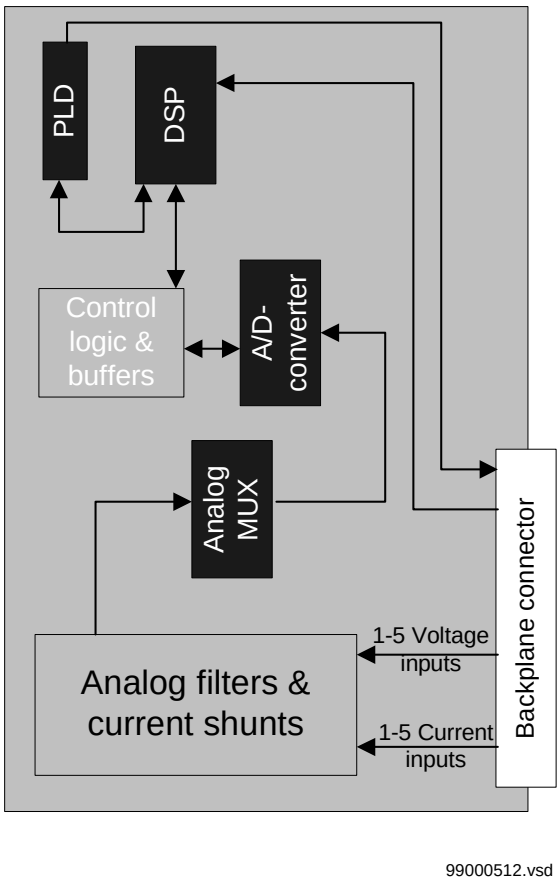

Figure 144: Block diagram for the ADM

4 Main processing module (MPM)

The terminal is based on a pipelined multi-processor design. The 32-bit main controller receives the result from the Signal processing module every millisecond.

All memory management are also handled by the main controller. The module has 8MB of disc memory and 1MB of code memory. It also has 8MB of dynamic memory.

The controller also serves four serial links: one high-speed CAN bus for Input/Output modules and three serial links for different types of HMI communication.

The main controller makes all decisions, based on the information from the Signal processing module and from the binary inputs. The decisions are sent to the different output modules and to these communication ports:

- Local HMI module including a front-connected PC, if any, for local human-machine communication.
- LON communication port at the rear (option).
- SPA/IEC communication port at the rear (option)

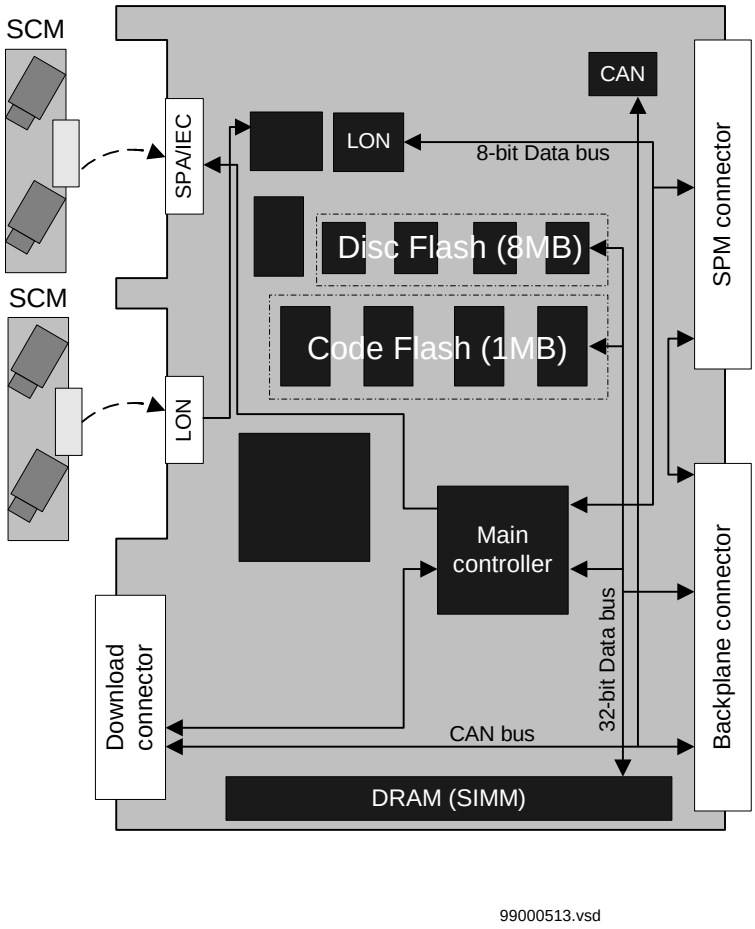

Figure 145: Block diagram for the MPM

To allow easy upgrading of software in the field a special connector is used, the Download connector.

5 Signal processing module (SPM)

All numerical data is received in all of the up to 12 (16 bits) digital signal processors (DSP). In these DSPs, the main part of the filtering and the calculations take place. The result from the calculations in the DSPs is sent every millisecond on a parallel bus to the (32 bit) main controller on the Main processing module.

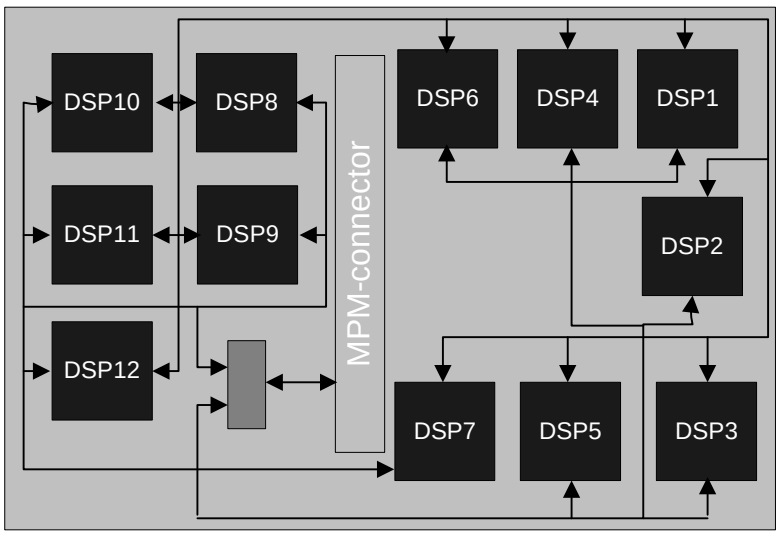

Figure 146: Block diagram of the SPM

6 Input/Output modules

6.1 Binary input module (BIM)

The binary input module contains 16 optically isolated binary inputs. The binary inputs are freely programmable and can be used for the input logical signals to any of the functions. They can also be included in the disturbance recording and event recording functions. This enables the extensive monitoring and evaluation of operation for the terminal and for all associated electrical circuits. The voltage level of the binary input modules can be selected at order.

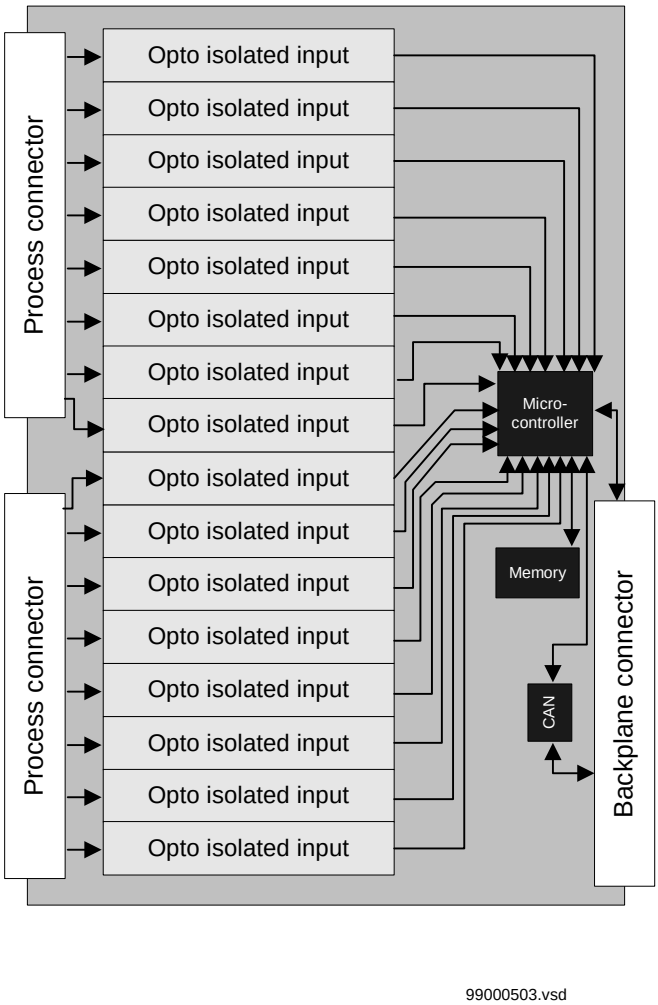

Figure 147: Block diagram of the binary input module

6.2 Binary output module (BOM)

The Binary output module has 24 single-output relays or 12 command-output relays. They are grouped together as can be seen in figure 148 and 149. All the output relays have contacts with a high switching capacity (trip and signal relays).

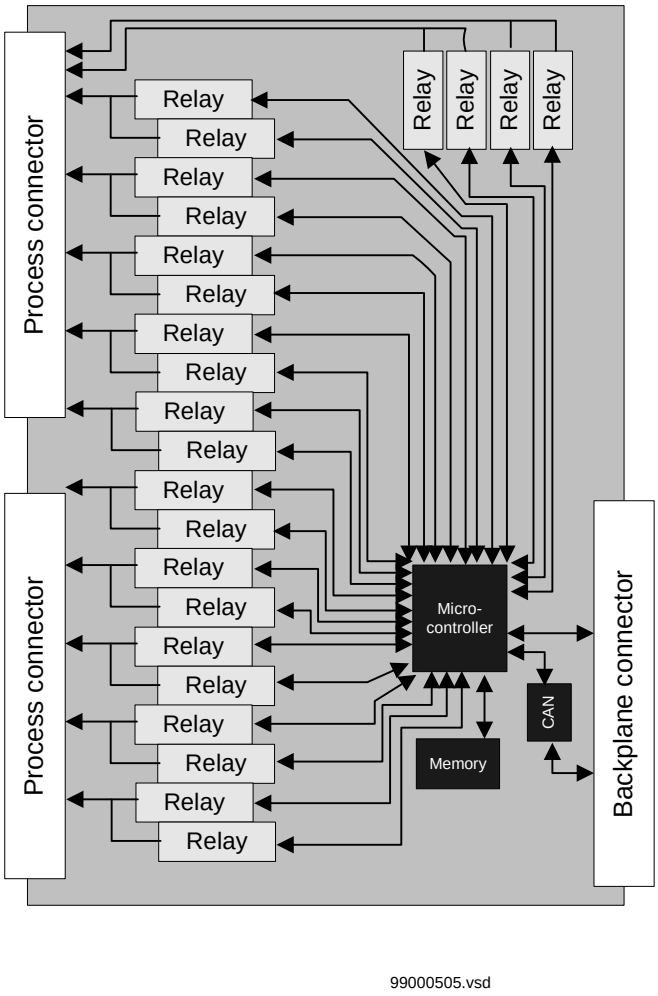

Figure 148: Block diagram of the binary output module

Two single output relay contacts can be connected in series (which gives a command output) in order to get a high security at operation of high voltage apparatuses.

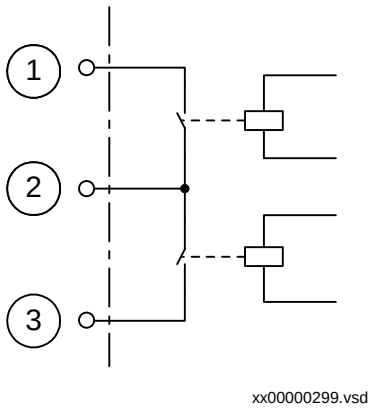

Figure 149: One of twelve binary output groups

The output relays are provided with a supervision function to ensure a high degree of security against unwanted operation. The status of the output circuits is continuously read back and compared with the expected status. If any discrepancy occurs, an error is reported. This function covers:

- interrupt or short circuit in an output relay coil
- failure of an output relay driver.

7 Power supply module (PSM)

The power supply module (PSM) contains a built-in, self-regulated DC/DC converter that provides full isolation between the terminal and the external battery system. The wide input voltage range of the DC/DC converter converts an input voltage range from 48 to 250V, including a +/-20% tolerance on the EL voltage. The output voltages are +5, +12 and -12 Volt.

The PSM, used in the 1/2x19” and 3/4x19” platforms, has built-in binary I/O with four optically isolated inputs and five outputs. One of the binary outputs is dedicated for internal fail. The PSM can provide power up to 20W.

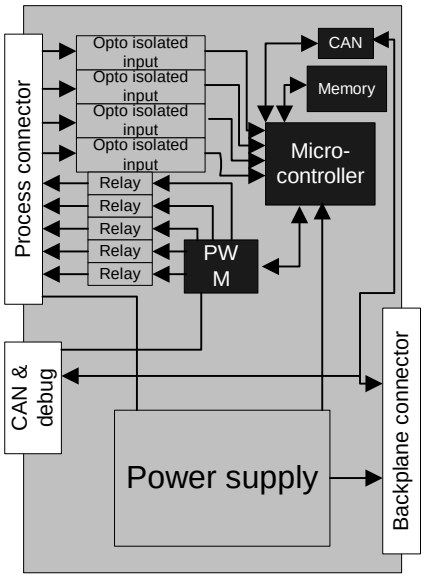

Figure 150: Block diagram for the PSM used in 1/2x19” and 3/4x19” cases.

8 Human-machine interface (HMI)

The local HMI module consists of three LEDs (red, yellow, and green), an LCD with four lines, each containing 16 characters, six buttons and an optical connector for PC communication.

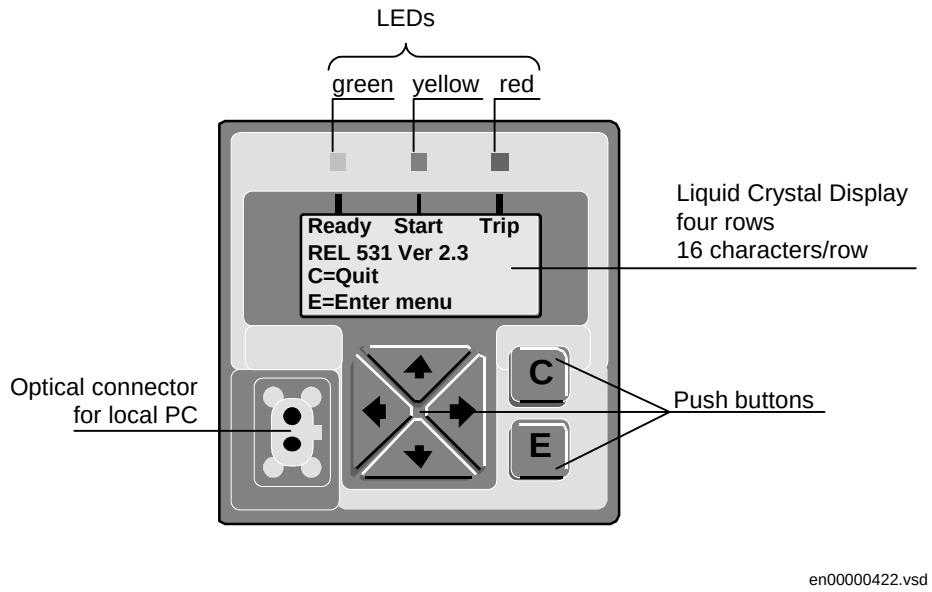

Figure 151: Local HMI

The PC is connected via a special cable, that has a built-in optical to electrical interface. Thus, disturbance-free local serial communication with the personal computer is achieved. Software tools are available from ABB for this communication. A PC greatly simplifies the communication with the terminal. It also gives the user additional functionality which is unavailable on the HMI because of insufficient space. The LEDs on the HMI display this information:

Table 21: The local HMI LED display

LED indication	Information
Green:	
Steady	In service
Flashing	Internal failure
Dark	No power supply
Yellow:	
Steady	Disturbance Report triggered
Flashing	Terminal in test mode
Red:	
Steady	Trip command issued from a protection function or disturbance recorder started
Flashing	Blocked