CONNECTION AND SETTING GUIDE

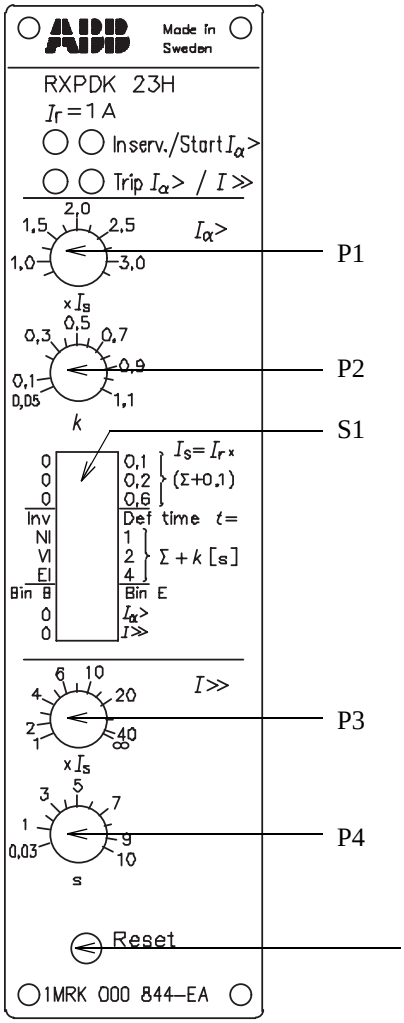

Fig. 1 Front layout

Rated voltage of the relay U_r = 120V.
Rated current of the relay I_r = 1A or 5A.
Rated frequency of the relay f_r = 50 Hz and 60 Hz.
Phase angle φ, positive if I lags U.

LED indicators:
In serv. (green): indicates relay in service.
Start I_α> (yellow): indicates operation of I_α >(no time delay).
Trip I_α> (red): indicates operation of I_α > after the set t time delay.
Trip I>> (red): indicates operation of I>> after the set s time delay.

I_α> directional over-current stage:
Potentiometer (P1) for setting of the operate value for the function.
Operates when I ≥ set I_α> AND 0° ≤ φ ≤ 140°.

Potentiometer (P2) for setting of the inverse-time factor k or definite-time delay.

10-pole programming switch (S1) for setting of the scale-constant I_s, inverse or definite-time delay, time delay characteristic and the binary input function.

I>> non-directional high set stage:
Potentiometer (P3) for setting of the operate value for the function.
Operates when I ≥ set I>>.

Potentiometer (P4) for setting of the definite time delay for the function I>>.

Reset push-button

INSTALLATION

The RXPDK 23H relay requires a dc-dc converter type RXTUG for auxiliary supply ±24 V. Connection of voltage RL shall be made only when the binary input is used.

The relay is delivered with a short-circuiting connector RTXK for mounting on the rear of the terminal base. This connector will automatically short-circuit the current input when the relay is removed from its terminal base.

NOTE! The auxiliary voltage supply should be interrupted or the output circuits should be blocked to avoid the risk of unwanted alarm or tripping, before the relay is plugged into or withdrawn from its terminal base.

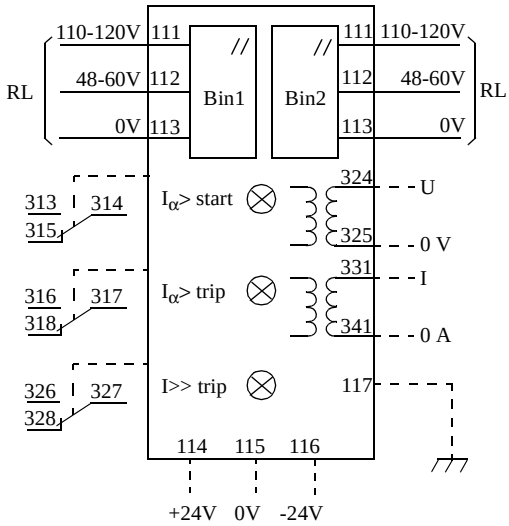

Fig. 2 Terminal diagram

SETTINGS:

All settings can be changed while the relay is in normal service.

1. Setting of the scale-constant I_s.
I_s is set with the programming switches S1:1, S1:2 and S1:3. Available settings are 0,1, 0,4, 0,7 and 1,0 x rated current I_r

2. Setting of the operate value for the directional over-current stage I_α>.
The operate value I_α> is set with potentiometer P1 according to P1 x I_s.

3. The directional over-current stage time delay.
The directional stage has four characteristics, which are programmed on the programming switches S1:4 to S1:7
Definite-time delay.
Set switch S1:4 to position Def. time, where t = Σ + k. Switches S1:5 to S1:7 are used for the main adjustment within the range Σ = 0 - 7 s. The potentiometer P2 is used for the fine adjustment, k = 0,05 - 1,1 s. The minimum time delay is 50 ms and the maximum time delay is 8,1 s.
Inverse-time delay.
Set switch S1:4 to position Inv., the inverse-time delay characteristic is selected with the switches S1:5 to S1:7
(NI = Normal Inverse, VI = Very Inverse and EI = Extremely Inverse). By setting the selector switch S1 a precedence order is applied, from top (S1:5) to bottom (S1:7). That is, if the NI characteristic is selected, it overrides the settings of switch S1:6 and S1:7.
After setting the inverse-time characteristic, the time delay is determined by the inverse-time factor k, which is adjusted with potentiometer P2.

4. Setting of the high set stage I>> operate current.
The operate value I>> is set with potentiometer P3 according to P3 x I_s.
This function can be blocked by setting potentiometer to ∞.

5. The non-directional high set stage time delay.
The time delay for the high set stage (I>>) has definite-time characteristic. The minimum time delay is 30 ms and the maximum time delay is 10 s. The setting is done with potentiometer P4.

6. The binary inputs.
There are two binary inputs, the Bin1 and Bin2.
Blocking or enabling of the trip functions.
The first binary input (Bin1) is used for blocking or enabling of the trip functions. By setting the switch S1:8 to Bin B, active signal on the Bin1 input will block selected function setted with switch S1:9 and S1:10. By setting the switch S1:8 to Bin E active signal on the Bin1 input will enabling selected function. When S1:9 is set to 0, the binary input Bin1 will not influence the function. When S1:10 is set to 0, the binary input Bin1 will not influence the function.
Remote resetting of the LED indicators.
The second binary input Bin2 is used for remote reset of the Trip I_α> and Trip I>> LED indicators.
The function is activated when a voltage is applied to input Bin2.

INDICATION

There are four LED indicators. The trip indicators seal-in and are reset manually by the ”Reset” push-button, while the start indicator resets automatically when the relay resets. When the ”Reset” push-button is depressed during normal operating conditions, all LED’s except "In serv." will light up.

When connecting RXPDK 23H to the supply voltage, the relay performs a self test. The ”In serv.” LED is alight, after performing the self test and when the relay is ready for operation. In case of a fault, the LED’s will start flashing.

Tripping and start outputs. The RXPDK 23H relay has one start and two tripping outputs. Each output is provided with one change-over contact.
All outputs reset automatically when the measured value decreases below the resetting value of the relay.

ESD

The relay contains electronic circuits which can be damaged if exposed to static electricity.
Always avoid to touch the circuit board when the relay cover is removed during the setting procedure.