This document is issued by means of a computerized system.
The digitally stored original is electronically approved. The approved document has a date entered in the 'Approved'-field.
A manual signature is not required.

a) For mounting on active part use A+106, B+106 and C+106 (See also Drawing 54920103-1)
b) Short version means reduced switching capacity. Please refer to Technical Guide
c) Not applicable for 380 kV

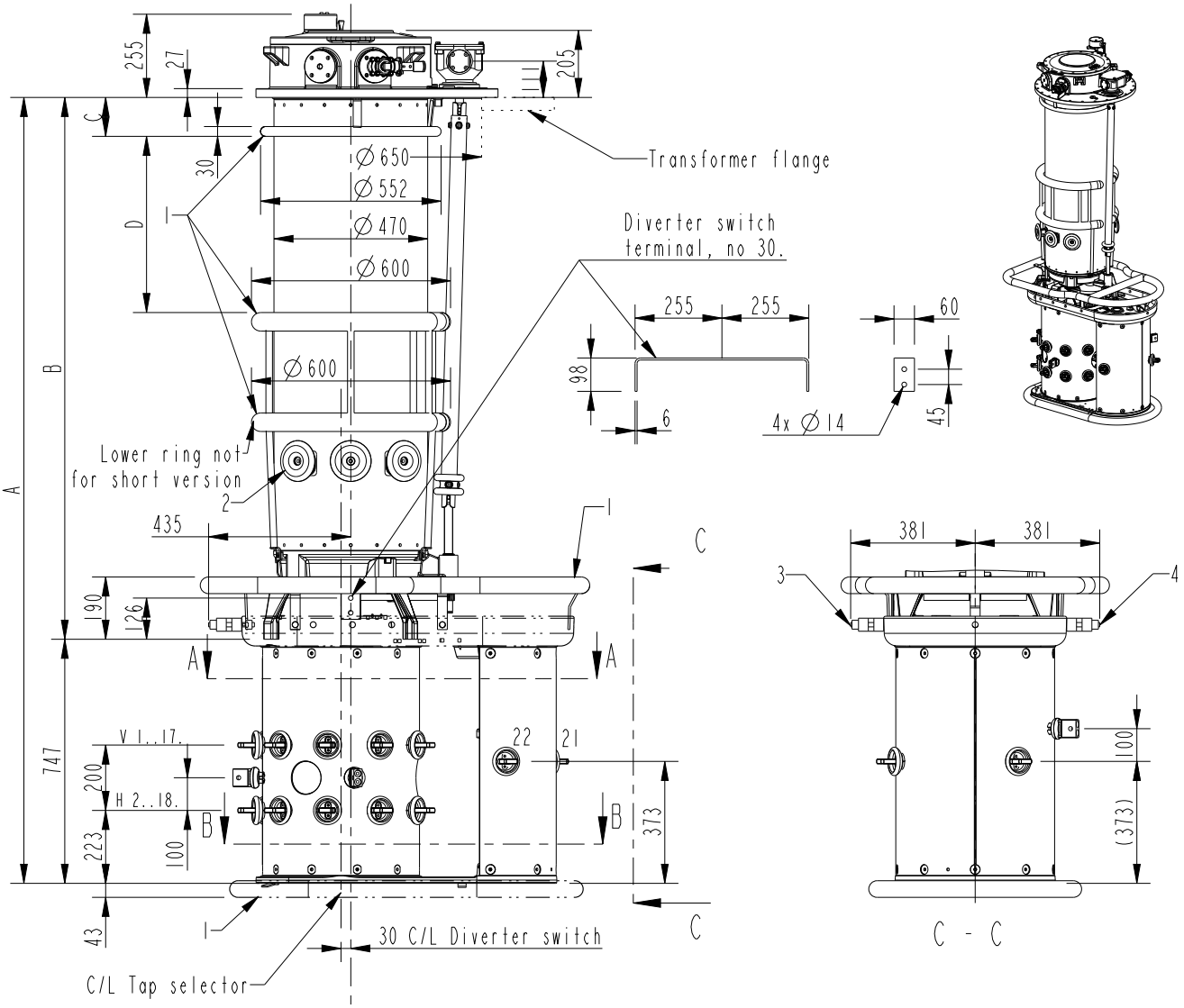

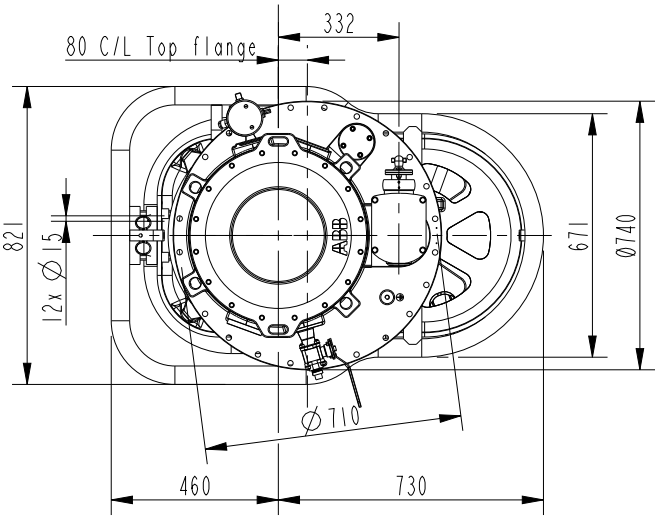

1) Shielding rings for insulating levels 650, 750 and 1050 kV only. Shielding rings diameter additional 6 mm for insulating level 1050 kV only.
2) Shield for insultaing levels 650, 750 and 1050 kV only.
3) Only for positions 14-35.
4) Only for positions 10-11.

INSULATION LEVEL kV		380 650 750	1050	SHORT VERSION b) 380,650 750	1050
Dimensions in mm	A	2101 a)	2401 a)	1881 a)	2181 a)
	B	1354 a)	1654 a)	1134 a)	1434 a)
	C	119 a)c)	119 a)	119 a)c)	119 a)
	D	240 c)	540	240 c)	540

Date / Approved	Responsible department	Document Kind	
2016-12-01	PGCO/TK	DIMENSION DRAWING	

Title
TAP-CHANGER
VUCGR, VUCGD E,T XXXX/0-1800/F 10-11,14-35 Pos

Document Id.	Revision	Language	Sheet
1ZSC026120-AAK	B	EN	1/3

We reserve all rights in this document and in the information contained therein. Reproduction, use or disclosure to third parties without express authority is strictly forbidden. © Copyright 2015 ABB. All rights reserved.

This document is issued by means of a computerized system.
The digitally stored original is electronically approved. The approved document has a date entered in the 'Approved'-field.
A manual signature is not required.

10-11 POSITIONS

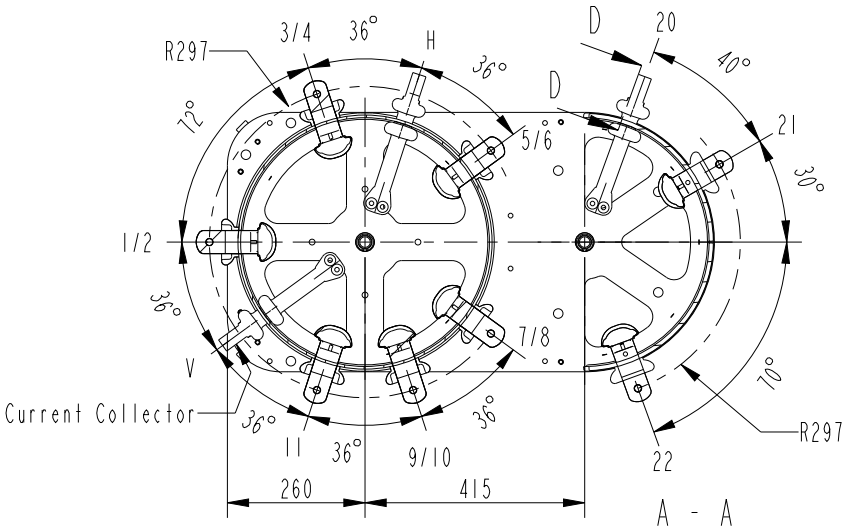

A - A

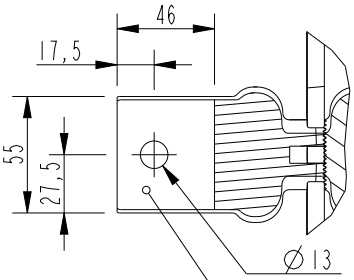

D - D

14-15 POSITIONS

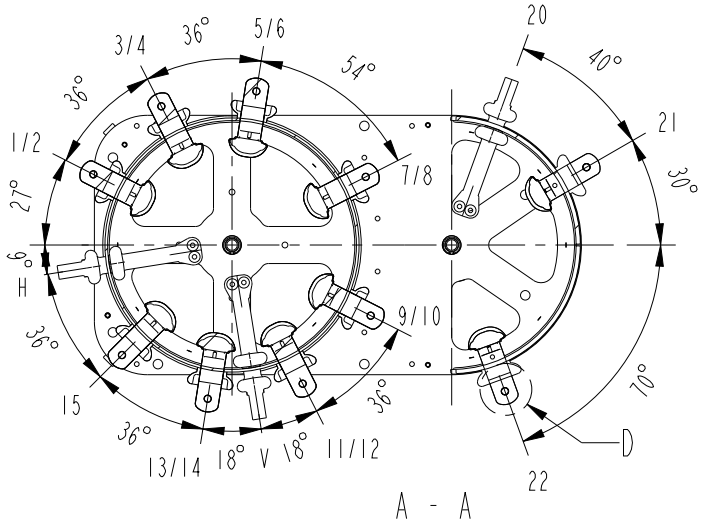

A - A

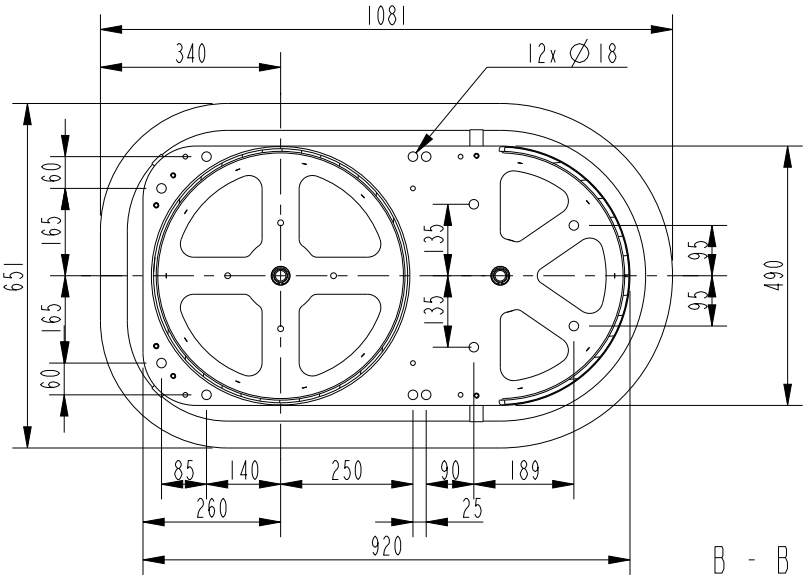

B - B

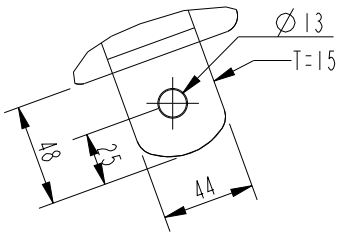

D

Date / Approved	Responsible department	Document Kind	
2016-12-01	PGCO/TK	DIMENSION DRAWING	

Title
TAP-CHANGER
VUCGR, VUCGD E,T XXXX/0-1800/F 10-11,14-35 Pos

Document Id.	Revision	Language	Sheet
1ZSC026120-AAK	B	EN	2/3

We reserve all rights in this document and in the information contained therein. Reproduction, use or disclosure to third parties without express authority is strictly forbidden. © Copyright 2015 ABB. All rights reserved.

This document is issued by means of a computerized system.
The digitally stored original is electronically approved. The approved document has a date entered in the 'Approved'-field.
A manual signature is not required.

16-19 POSITIONS

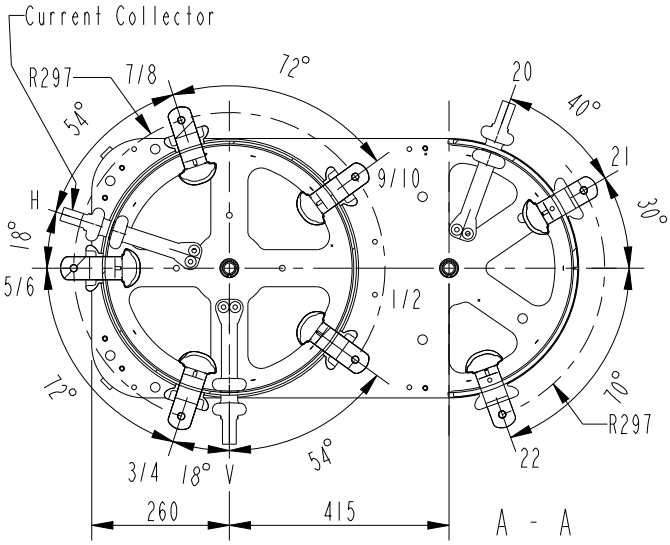

20-23 POSITIONS

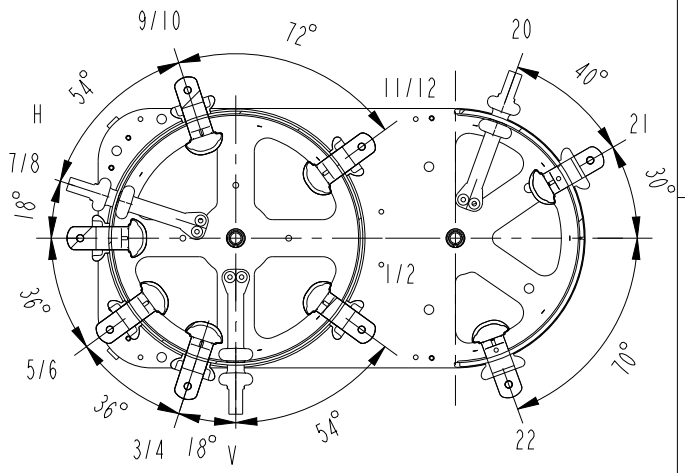

24-27 POSITIONS

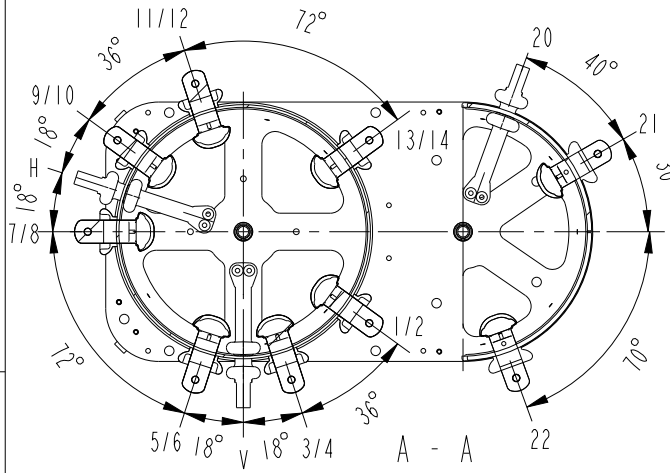

28-31 POSITIONS

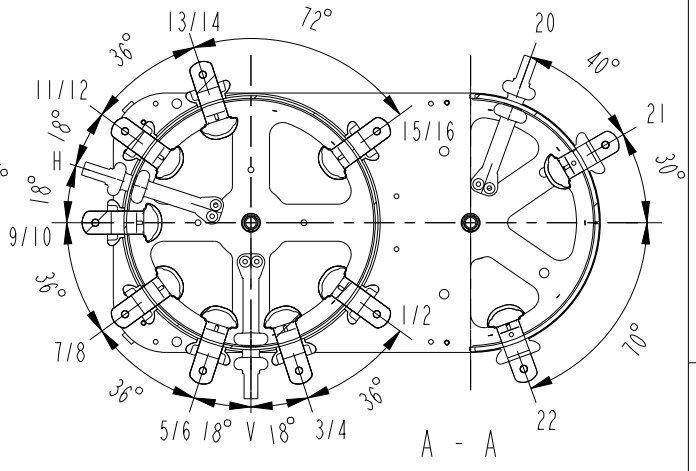

32-35 POSITIONS

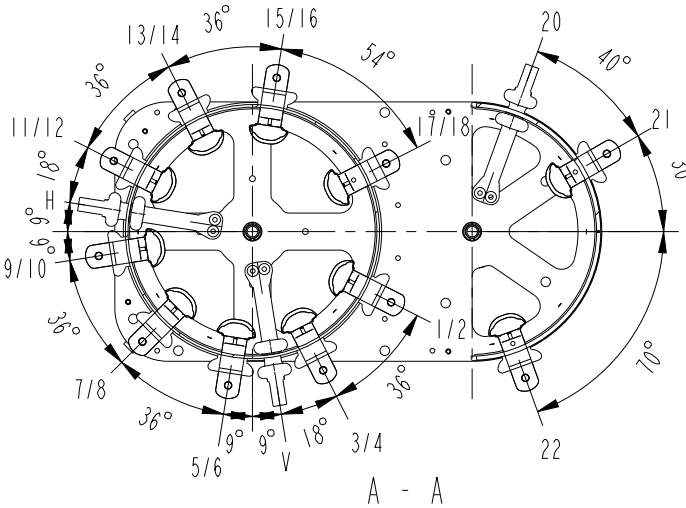

ADDITIONAL DRAWINGS:
Connection Diagrams:See Technical Guide UC
Mounting on active part: 54920103-1
Accessories:54920103-2
Motor Drive BUL2: 1ZSC004106-AAE
Motor Drive BUE: 1ZSC004106-AAH or -AAJ
External Drive Shaft:54920083-4
Pressure Relay:54920083-2
Bevel Gear:54920083-1
Holes for mounting of support for cleats and leads:1ZSC026099

Date / Approved	Responsible department	Document Kind	
2016-12-01	PGCO/TK	DIMENSION DRAWING	

Title
TAP-CHANGER
VUCGR, VUCGD E,T XXXX/0-1800/F 10-11,14-35 Pos

Document Id.	Revision	Language	Sheet
1ZSC026120-AAK	B	EN	3/3

We reserve all rights in this document and in the information contained therein. Reproduction, use or disclosure to third parties without express authority is strictly forbidden. © Copyright 2015 ABB. All rights reserved.