SVC for Dynamic Voltage Control and Prevention of Voltage Collapse on a 115 kV Power Transmission System

Since 2009, NSTAR Electric & Gas Corporation has been operating a Static Var Compensator (SVC) supplied by ABB on their 115 kV transmission system in Lower Southeastern Massachusetts, feeding the Cape Cod area. The SVC, rated at 115 kV, 0-225 Mvar capacitive for 2 seconds and 0-112.5 Mvar capacitive for longer term supply, is located at a substation near Hyannis, Massachusetts. Its purpose is to supply fast-acting voltage support to the transmission system on Cape Cod in the event the two major supply sources to the area were to be out of service unexpectedly. If this event occurred with no other sources of generation available, a voltage collapse was predicted to occur, affecting Cape Cod and possibly other sections of the transmission system. The SVC senses degrading voltage and rapidly injects up to 225 Mvar of reactive power for 2 seconds followed by a longer term supply of up to 112.5 Mvar to stabilize and control transmission system voltage. The system is fully automated to activate and inject reactive power when the transmission system voltage falls below a specified set point, to maintain a specified voltage range, and then automatically return to stand-by status.

The SVC was supplied under an Engineer-Procure-Construct contract, where ABB also coordinated system installation with NSTAR who was simultaneously expanding the substation into which the SVC connected.

System Requirements on the SVC

The critical contingency that the area transmission system must withstand is the loss of two 345 kV lines serving the Cape Cod area. A large part of the area load consists of motor loads from air conditioning and other motor-driven equipment. As a consequence of stalling motor loads, unless remedied, voltages do not recover following fault clearance. A main goal of the SVC is to help re-accelerate motor loads after grid faults. Following a critical system contingency, the 115 kV voltage must recover to 90% of nominal voltage in less than 1 second after fault clearing, and to 95% of nominal within 3 seconds. The SVC System was designed to meet this requirement.

The SVC is operated in such a way that under normal system conditions it does not need to provide voltage support. Its controls are set such that its full capability is available to provide voltage support during severe system contingencies.

Thus, the SVC control system is set to take the SVC out of stand-by mode when the transmission system 115 kV bus voltage is lower than a pre-set level between 0.88 and 0.98 p.u., defined by the operator.

Main SVC design

The SVC consists of one Thyristor-Controlled Reactor (TCR), rated at 112.5 Mvar, and two Thyristor-Switched Capacitors (TSC), each rated at 112.5 Mvar. The SVC normally only runs in capacitive mode. However, the design also allows a short time fixed inductive yield of 112.5 Mvar, typically for 3 seconds, to mitigate possible overvoltage conditions in the grid.

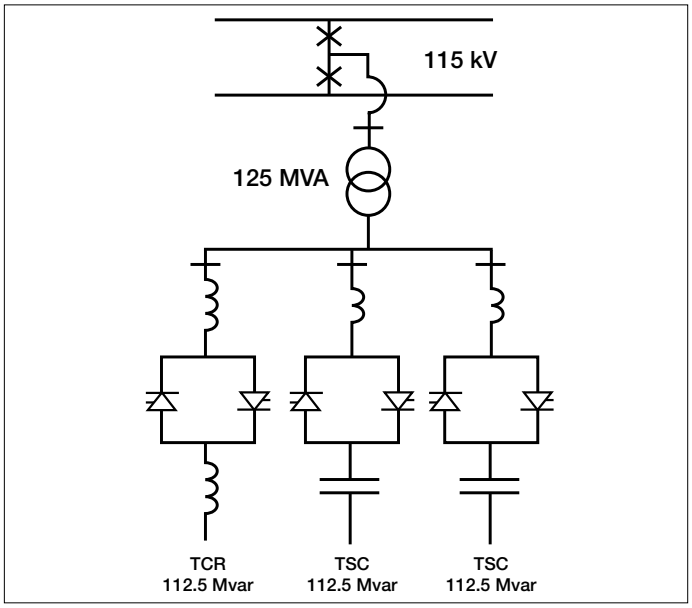

Single-line diagram, SVC

The design is filter-less. This means that none of the branches is in operation in the stand-by mode (0 Mvar output), which is the condition the SVC will be in most of the time. This enables very low total SVC losses.

In the 0 Mvar operating point, the SVC generates no harmonics, since the TCR and TSCs are blocked. During active SVC operation, where there is harmonic generation in the TCR, the TSC branches are working as harmonic filters.

Thyristor valves
Each three-phase thyristor valve consists of three single-phase units with 4” PCTs (Phase Control Thyristors) stacked vertically in two anti-parallel stacks per phase.

The thyristors are liquid cooled using a mixture of glycol and de-ionized water with low conductivity as coolant. Nickel-plated aluminium heat sinks, providing double side thyristor cooling, also serve as electrical connection between the thyristors.

A dry air cooler placed outdoors provides heat exchange between the cooling medium and the air. Fans are automatically started if the cooling medium temperature exceeds a certain level.

Control system
The SVC is controlled by a microprocessor based control system. The control system is based on the ABB MACH 2 concept, built around an industrial PC with add-in circuit boards and I/O racks connected via standard type field busses. Dedicated voltage and current transformers provide the control system with information of the network parameters, employed in the SVC control.

The control system provides facilities for SVC control either from the Operator Work Station (OWS) in the SVC control room, or remotely from a dispatch centre via a Remote Terminal Unit (RTU) / SCADA.

The normal mode of operation is automatic voltage control. The voltage control system is a three-phase symmetrical, closed loop system with control of the positive phase sequence voltage at the 115 kV bus.

Undervoltage strategy
Should the system voltage drop below a pre-set level, adjustable between 0.3 p.u. and 0.7 p.u., the SVC is regulated to 0 Mvar output with the TCR and TSC valves blocked. This strategy ensures that the SVC stays on line and is ready to support the voltage when the fault in the grid is cleared.

Overvoltage strategy
The TCR valve is fully controllable up to 1.3 p.u. primary voltage. For primary voltages above 1.3 p.u., protective firing of the valve is executed. If the primary voltage remains above 1.3 p.u. for more than 1.0 second, the SVC is tripped. For primary voltages between 1.15 and 1.3 p.u., the TCR is fully conducting during 3 seconds.

SVC self-test mode
For normal system voltage, the SVC will be in stand-by mode, with the TCR and TSC valves blocked. Since the SVC will be in stand-by most of the time, an SVC self-test mode is included to make sure that the SVC is ready for operation when needed. The self-test mode is activated once a week and initiates the following automatic sequences of operation:

- SVC operation at 0 Mvar with the TCR and one TSC active for one minute
- Switching to the other TSC and operating for another minute.

Main technical data

System voltage	115 kV
SVC rating	Short-time (2 seconds): 0-225 Mvar capacitive, continuously variable Long-time (6 hours): 0-112.5 Mvar capacitive, continuously variable For 3 seconds: 112.5 Mvar inductive (fixed)
Control system	Three-phase symmetrical voltage control by means of a closed loop voltage regulator
Thyristor valves	PCT type thyristors, water cooled, indirect light firing

For more information please contact:

ABB AB
FACTS
SE-721 64 Västerås, SWEDEN
Phone: +46 (0)21 32 50 00
Fax: +46 (0)21 32 48 10

www.abb.com

A02-0220 E, 2010-06