Relion® 670 series

Self supervision techniques, 670 series
Principles and functions

Power and productivity
for a better world™

Document ID: 1MRK 580 172-XEN
Issued: October 2009
Revision: -

© Copyright 2009 ABB. All rights reserved

Copyright

This document and parts thereof must not be reproduced or copied without written permission from ABB, and the contents thereof must not be imparted to a third party, nor used for any unauthorized purpose.

The software or hardware described in this document is furnished under a license and may be used, copied, or disclosed only in accordance with the terms of such license.

Trademarks

ABB is a registered trademark of ABB Group. All other brand or product names mentioned in this document may be trademarks or registered trademarks of their respective holders.

ABB AB

Substation Automation Products

SE-721 59 Västerås

Sweden

Telephone: +46 (0) 21 34 20 00

Facsimile: +46 (0) 21 14 69 18

www.abb.com/substationautomation

Disclaimer

The data, examples and diagrams in this manual are included solely for the concept or product description and are not to be deemed as a statement of guaranteed properties. All persons responsible for applying the equipment addressed in this manual must satisfy themselves that each intended application is suitable and acceptable, including that any applicable safety or other operational requirements are complied with. In particular, any risks in applications where a system failure and/or product failure would create a risk for harm to property or persons (including but not limited to personal injuries or death) shall be the sole responsibility of the person or entity applying the equipment, and those so responsible are here by requested to ensure that all measures are taken to exclude or mitigate such risks.

This document has been carefully checked by ABB but deviations cannot be completely ruled out. In case any errors are detected, the reader is kindly requested to notify the manufacturer. Other than under explicit contractual commitments, in no event shall ABB be responsible or liable for any loss or damage resulting from the use of this manual or the application of the equipment.

Conformity

This product complies with the directive of the Council of the European Communities on the approximation of the laws of the Member States relating to electromagnetic compatibility (EMC Directive 2004/108/EC) and concerning electrical equipment for use within specified voltage limits (Low-voltage directive2006/95/EC).

This conformity is proved by tests conducted by ABB AB in accordance with the generic standard EN 50263 for the EMC directive, and with the standards EN60255-5 and/or EN 50178 for the low voltage directive.

This product is designed and produced for industrial use.

TABLE OF CONTENTS **PAGE**

1. INTRODUCTION

One of the major benefits of microprocessor technology is that no additional hardware is required for the self supervision, a function that increases the availability and reliability of the whole system, by ensuring that product and system faults can be detected immediately.

The self supervision can be performed by software functions, utilizing standard features as watchdog functions, checksum etc., and some extra software functions, to get as much coverage as possible for the self supervision. However, the self supervision must be as simple as possible, to keep the reliability high.

The current and voltage circuits, and the communication links, can also be monitored continuously by an external client such as a substation monitoring system (SMS) or substation control system (SCS), for example by taking measuring values from Main 1 and Main 2 at regular intervals during steady state conditions and comparing these values. An other option is reporting to the control center for comparison with the result from the state estimation. It is also possible to monitor the dataflow in the various communication systems connected to the supervised device.

Messages from the self supervision system can be available both locally and remotely, which further simplifies fault tracing, and cuts down the time for repair, e.g. by identification of defective parts.

As an example of the improved availability with self supervision, the **M**ean **T**ime **T**o **R**epair **(MTTR)** can be compared with conventional static or electro-mechanical equipment without supervision.

With a test interval of e.g. 2 years, the MTTR without supervision is approximately 1 year, since a fault will most likely not be detected until the next test is performed. With supervision, a fault can normally be repaired within 48 hours, see figure 1 below. This means that the MTTR will be 2 days instead of 365 days, a significant improvement.

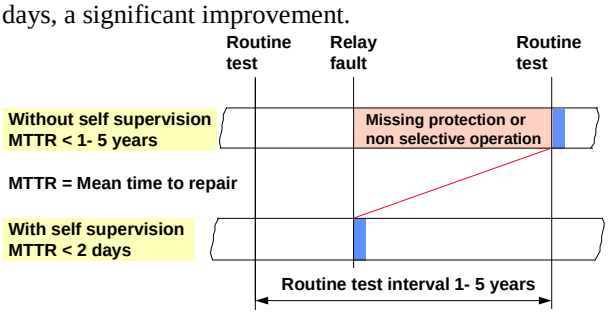

Figure 1. Impact of self supervision.

As an extra benefit the software based self supervision has an inherent capability, which is very attractive for protection and control equipment in an Electrical Power System: **The risk for unwanted functions is decreased.** The error detection by the self supervision is normally used to block the equipment.

Thus the probability for unwanted functions is decreased, at the expense of missing operations. However, missing operations are much easier to deal with, e.g. via back-up systems.

As statistics from both electromechanical relays and numerical is available, in this case from Norway, the security and dependability can be analyzed. Also the impact of duplicated protection with reference to self supervision is available. The figures has been used for a risk analysis reference to dependability, security and unavailability

Main result	Electromechanical / static		Numerical	
	Single	Redun-dant	Single	Redun-dant
Dependability	98.4	99.5	99.4	99.4
Security	68.1	49.5	95.5	92.1
Unavailability of line C	0.02	0.03	0.01	0.02

Figure 2. Result of risk analysis. The figures are given in %

From figure 2 it can be seen that numerical protections have the highest dependability and security. Note that a single numerical protection has higher security than redundant electromechanical protection and the same as duplicated numerical protection.

That the numerical protections are better is due to the built-in self supervision of these protections, where about 90% of all failures are assumed discovered immediately and thus repaired in 48 hours. In the electromechanical/ static protection systems, all failures were assumed undiscovered until the next test or fault.

Another feature in numerical technology is the access to an open information system, which for example increases the availability of the information from the self supervision to be sent to a remote location, for example to inform the maintenance organization.

2 GENERAL

The relay protection is a vital part of the fault clearing system. However, periodical testing and self supervision of the protection is important to secure the fault clearing function.

For relay equipment without self supervision, a fault is not detected until the equipment does not operate correctly, or detected by maintenance testing. To reduce the risk for a missing function, periodical maintenance testing is performed. The test interval is determined by the probability for a fault in the equipment. **M**ean **T**ime **T**o **F**ailure (**MTTF**), and by the fact that a fault in principle can be undetected for 50% of the time between test intervals, together with an evaluation of the acceptable probability of a missing fault clearing of a primary fault.
By experience, the test interval for equipment without self supervision has been in the range of 1- 4 years.

Numerical Relays with self supervision will of course decrease the need for manual testing. Thus, the maintenance cost can be reduced with maintained security and dependability for fault clearing. A suitable test interval for numerical relays with self supervision has to be established, but test intervals of 4- 8 years are used.

3 SELF SUPERVISION IN NUMERICAL RELAYS

Self supervision and self diagnosis are features, which are very difficult and expensive to implement in static analogue equipment. Complexity increases and in turn effectiveness decreases quickly to a point where it is not technically or economically justified.

In a microprocessor-based system, a certain processing time can be allocated to perform selected checks and verifications. The results can be compared e.g. with previously obtained. Detected discrepancies can initiate corrective measures or deactivate certain functions or the whole equipment. This feature leads, properly adapted, to maintenance by request rather than to a maintenance routine testing of the relays.

Self supervision can, as any system not cover 100 % of the hardware, the supervision does not cover for example interference protection, output relays contacts etc. (some self supervision can be provided) The self supervision versus manual testing is a matter of the complexity of the protection equipment. Less complex function as over current protections can be self supervised to a very high degree, for more complex functions such as distance protection or generator protection, a combination of self supervision, manual supervision including evaluation of the protection function performance, with information from disturbance- and event recordings, and in some cases manual testing will give the best result.

It is important that the self supervision is designed with an optimized performance with respect to detection ability versus the complexity and does not jeopardize the integrity of protection function. This optimization is limiting the detection degree for the self supervision in complex protection functions. A rudimentary self supervision function, as for example a " watch dog" function has very limited detection ability, and thus contributes in a limited way to increase the availability. The self supervision in numerical relay's can be designed with fairly high detection ability.

The self supervision can be designed with reference to the probability for a fault in different components. In principal active components are considered to have a higher fault rate than passive components.

The detection ability α can be defined with reference to the different components failure rate λ. (Faults/year)

$$\alpha = \frac{\lambda_2 \cdot 100}{\lambda_1 + \lambda_2}$$

α = Detection ability in %

λ_1 = Failure rate for <u>not</u> self supervised components

λ_2 = Failure rate for self supervised components

The self supervision in modern numerical relay's can detect around 85- 90 % of all faults with the failure rate taken for various components taken into account. The non supervised components are mainly passive components such as interference suppression devices and output relays, with very high MTTF (100-200 Years). The detection ability is almost as high as for manual testing with secondary injection of test quantities such as current and voltages for distance protection. The detection ability for self supervision and manual testing can be complementary. I.e. the self supervision detects fault which the manual testing does not detect and vice versa.

However, the time for fault detection with self supervision is in the order of seconds compared with the time to detect a fault with manual testing, which is in the range of years, i.e. a fault can be hidden in average half the manual test interval, see figure 1. This difference makes the self supervision more effective than manual testing.

The unavailability for redundant protection with different detection ability in the self supervision, combined with manual testing with the detection ability α = 90 % and α= 98 % is shown in figure 2. The curve shows only the unavailability with reference to capability to trip. Unwanted tripping is not considered. However, with numerical self supervision, the probability for unwanted tripping is also decreased

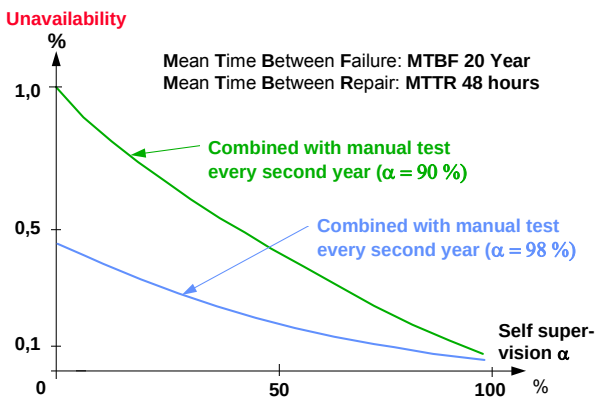

Figure 3. Unavailability for redundant protection

The Self supervision is in principal continuous. It has been in wide use since microprocessor based relays were introduced in the beginning of the last decade (around 1980). In most case it supervises the software with checksums and other methods, supervises the existence of certain signal or compares signals. It detects catastrophic failures immediately and hence can be used to block the protection at a failure, i.e. prevents the instantaneous incorrect function, which could occur in static or electromechanical relays. Thus the probability for an unwanted function is decreased, and the probability for a missing function is increased. The design is normally made to increase both security and dependability.

The self supervision is normally designed to be as simple as possible, with a limited amount of extra software and hardware. The advantage of this design principle is that the failure rate is lower than in the supervised circuits. False signals are not allowed; otherwise the benefit of the self supervision is lost. However, most actions, alarm or blocking has to be delayed by an appropriate time to avoid spurious function of the self supervision, i.e. during transient conditions or during interference. These delays are of no consequence when calculating the unavailability. The unavailability is determined by the mean time to repair. (MTTR)

The relay parts that deal with analog measuring quantities are in practice supervised to 100 %. An unsymmetry supervision of the primary measuring quantities will of course detect an unsymmetry and give alarm. However, the fault can alternatively be in the primary system, in the measuring transformers or in the relay's analogue parts.

However, the self supervision can not supervise that output relays and binary inputs can not be activated and fully supervised during normal service.

Thus a state of failure to operate is difficult to detect, when the output or input relay's are faulty. But the failure rate is extremely low for input and output circuits.

4. THE BENEFIT OF SELF SUPERVISION

The self-monitoring will increase the dependability, security and availability of the protection equipment, but will have the main impact on security.

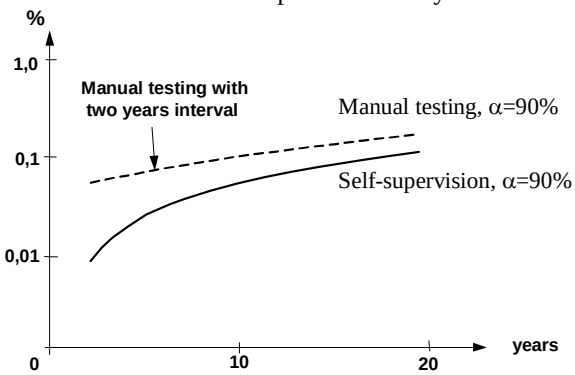

Figure 4. Probability of failure to operate for a single protection

Self supervision reduces the probability of unwanted function significantly (increased protection **security**) due to the possibility to block the protection for internal failure.

Protection systems may often consist of redundant functions. Redundancy will improve dependability but deteriorate the security of the protection system. Systematic use of self-monitoring, disturbance recordings etc via remote communication and sophisticated fault analysis will reduce the need for redundant protection functions due to the improvement in availability.

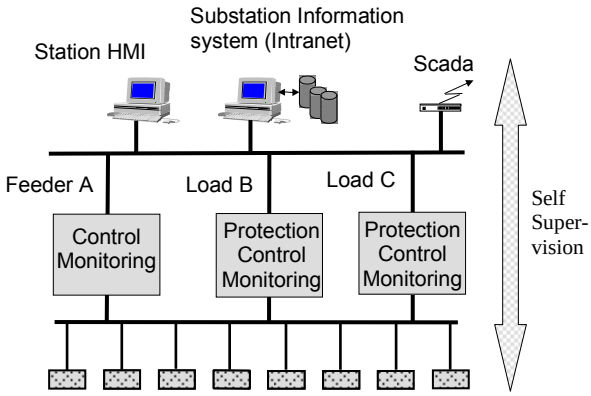

Figure 5. Improvement with self supervision

A station with both station- and process bus has a self supervision system that covers:

- Process bus (the connection between the primary equipment and the bay units)
- The bay unit with protection-, control- and monitoring functions.
- An information bus.

The difference between the galvanic cables between the bay units and the primary components and a process bus is the self supervision system. The process bus improves the security due to the possibility to block the bus for internal faults and give the operational personnel a possibility to repair the bus. The need for redundancy is a matter of risk analysis.

How self-monitoring improves the availability is illustrated by how it reduces the mean time to repair (MTTR), which is the time from a fault occurring until it is repaired. The self-monitoring is continuous, thus the time for fault detection with self-monitoring is in the order of seconds compared to the time to detect a fault with manual testing, which is in the range of years.

In this new solution spare parts and the availability of them is important. It should be possible to replace the most strategic sub station protection and control devices after an internal fault according to the risk analysis. Some agreement or co-operation with other utilities or manufacturers could economically facilitate this.

5 SELF SUPERVISION IN MODERN PROTECTION AND CONTROL EQUIPMENT

The described hardware and software self supervision refers to the Relion 670 series

The self supervision continuously supervises all the system functions, hardware as well as software by monitoring the hardware modules and the system functions.

The self supervisor is necessary to ensure dependability, availability and fault tolerance. In case of a failure, incorrect response or inconsistency, the corresponding

action is established a safe status, an alarm is given and an event registered for subsequent diagnostic analysis.
Important items of hardware, for example A/D converters main and program memories, the power supply etc are subjected to various tests when the system is switched on and also during normal service. A watchdog continuously monitors the integrity of the software functions. The exchange of data on the cPCI and CAN bus is continuously supervised.

- Normal micro-processor watchdog function.
- Checking of digitized measuring signals.
- Other alarms, for example hardware and time synchronization.

The self supervision status can be monitored from the local HMI (LCD- display) or a substation monitoring or substation automation system

Under the Diagnostics menu in the local HMI the present information from the self supervision function can be reviewed. The information can be found under Diagnostics\Internal Events or Diagnostics\IED Status\General. Refer to the *"Installation and Commissioning manual"* for a detailed list of supervision signals that can be generated and displayed in the local HMI.

A self supervision summary can be obtained by means of the potential free alarm contact (INTERNAL FAIL) located on the power supply module. The function of this output relay is an OR-function between the INT-FAIL signals see figure 6.

The self supervision events are stored in the internal event list, which is available on the HMI. Some also via the communication ports. The self supervision uses the normal signal configuration with the CAN bus to the input/output modules, transducer input module, power supply module and the GPS module. (The CAN bus is a standard from the automotive industry, Controller Area Network.), see figure 6

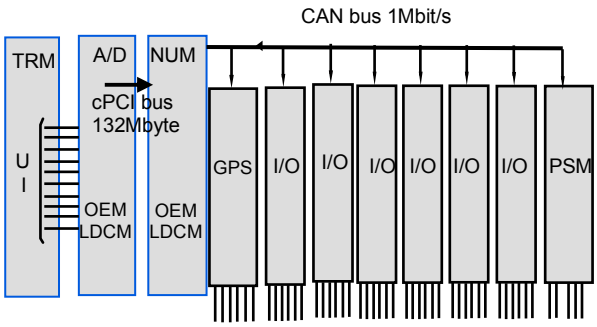

Figure 6. Signal structure for self supervision

The communication between the A/D converter and the various communication modules on the A/D module and the NUM(CPU) module uses a 132 Mbyte/second high speed bus, the cPCI- bus. (Compact Peripheral Component Interconnect).

6 Self supervision with internal signals

Self supervision provides several status signals that tell about the condition of the RELION 670 devices. This information is called internal signals. and are recorded in the event recorder as internal events.

The internal signals can be divided into two groups. One group handles signals that are always present in all type of protection and control devices as *standard signals.* Another group handles signals that are collected depending on the hardware configuration. The standard signals are listed below. The hardware dependent internal signals will be specified in section 7.

Explanation of internal signals

Name of signal	Reasons for activation
FAIL	This signal will be active if one or more of the following internal signals are active; INT—NUMFAIL, INT—LMDERROR, INT-WATCHDOG, INT—APPERROR, INT—RTEERROR, INT- FTFERROR, or any of the HW dependent signals
WARNING	This signal will be active if one or more of the following internal signals are active; INT—RTCERROR, INT—EC61850ERROR, INT—TIMESYNCHERROR
NUMFAIL	This signal will be active if one or more of the following internal signals are active; INT—WATCHDOG, INT—APPERROR, INT-RTEERROR, INT—FTFERROR
NUM/ WARNING	This signal will be active if one or more of the following internal signals are active; INT—RTCERROR, INT—IEC61850ERROR
RTCERROR	This signal will be active when there is an error with the real time clock or GPS.
TIMESYNCH ERROR	This signal will be active when the source of the time synchronization is lost, or when the time system has to make a time reset.
RTEERROR	This signal will be active if the Runtime Engine failed to do some actions with the application threads. The actions can be loading of settings or parameters for components, changing of setting groups, loading or unloading of application threads.
IEC61850 ERROR	This signal will be active if the IEC61850 stack did not succeed in some actions like reading IEC61850 configuration, startup etc.
WATCHDOG	This signal will be activated when the terminal has been under too heavy load for at least 5 minutes. The operating systems background task is used for the measurement
LMDERROR	LON network interface, MIP/DPS, is in an unrecoverable error state.
APPERROR	This signal will be active if one or more of the application threads are not in the state that Runtime Engine expects. The states can be CREATED, INITIALIZED, RUNNING, etc.
SETCHGD	This signal will generate an Internal Event to the Internal Event list if any settings are changed.
SETGRPCHGD	This signal will generate an Internal Event to the Internal Event list if any setting groups are changed.
FTFERROR	This signal will be active if both the working file and the backup file are corrupted and can not be recovered.

Self supervision standard internal signals

FAIL	Internal Fail status
WARNING	Internal Warning status
NUMFAIL	CPU module Fail status
NUMWARNING	CPU module Warning status
RTCERROR	Real Time Clock status
TIMESYNCHERR.	Time Synchronization status
RTEERROR	Runtime Execution Error status
IEC61850ERROR	IEC 61850 Error status
WATCHDOG	SW Watchdog Error status
LMDERROR	LON/Mip Device Error status
APPERROR	Runtime Application Error status
SETCHGD	Settings changed
SETGRPCHGD	Setting groups changed
FTFERROR	Fault Tolerant Filesystem status

7. SELF SUPERVISION OF HARDWARE MODULES

The hardware is the same for all types of protection and control functions in the Relion 670 series and is based on a number of modules in a hardware platform.

The hardware modules, which can be configured according to the application or object requirements, for example to make a line distance protection, current differential protection, generator protection, transformer protection, equipment for control and monitoring control etc.

In principal the self supervision will be identical for all applications, but depending on the selected hardware modules. The hardware platform consist of a number of modules, using modern processor technology and multiple I/O (Input/Output) boards, interconnected via a motherboard in the front, see figure 7. The modular structure allows for easy modifications and repair, as well as future upgrading.

The I/Os that are connected to the CAN bus has a on-board microcontroller that includes the self supervision of the I/O. The built in self supervision is described in section 8. Software self supervision and includes self supervision

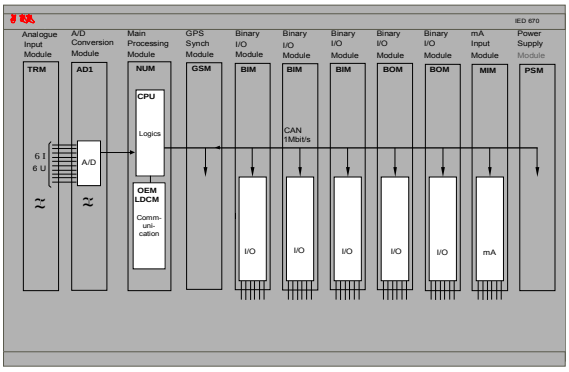

Figure 7. Relion 670 series hardware platform

The self supervision of the hardware modules will be described module by module. The principal diagram of the hardware self supervision is shown in figure 8.

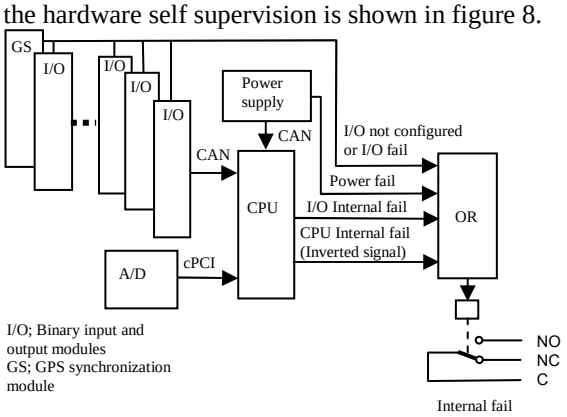

Figure 8 Hardware self supervision, potential free alarm contact

Note; *When a module is added or exchanged, the internal fail is activated until reconfiguration has been performed on the HM as follows.*

- Settings-general settings - I/O modules - reconfigure

The I/O modules are directly coupled to the hardwired OR-gate, which is independent from the CPU. Thus, if the internal watchdog in the I/O discovers a fault, the internal fail relay is activated directly from the I/O. If there is some problem discovered by the CPU in connection with the I/Os, the internal fail relay is activated by the CPU.

The self supervisions hardware dependent internal signals are available on the HMI and can be connected to the event recorder as internal events. The internal hardware related signals are specified below.

<u>Hardware dependent internal self supervision signals.</u>

Card	Signal name	Description
ADxx	ADxx	Analog In Module Error status
BIM	BIM-Error	Binary In Module Error status
BOM	BOM-Error	Binary Out Module Error status
IOM	IOM-Error	In/Out Module Error status
MIM	MIM-Error	Millampere Input Module Error status
LDCM	LDCM-Error	Line Differential Communication Error status

7.1 NUM, Numerical module

The self supervision central module is of course the CPU on the numerical module. The hardware supervision of the numerical module is a small part of the total self supervision. The internal watchdog in the CPU is used also to check the both hardware and software on the NUM. The main description of the CPU controlled self supervision is made under section 8. Software self supervision

- Main Controller/CPU type IBM 3200PowerPC 750FX, 600 MHz
- Internal communication with cPCI bus 132Mbytes/second
- Memory
  - Up to 128 Mb FLASH
  - Up to 256 Mb DRAM
- Cycle time in IED 670
  - 1 or 3 ms for protection
  - 8 or 100 ms for logic

Figure 9 NUM, numerical module

7.2 TRM, transformer input module (One or two)

- One or two transformer modules can be used
- Up to 12 analogue inputs can be connected for each module
  - 0 – 6 U, 110/220V rated voltage
  - 6–12 I, 1A or 5A rated current
  - 50/60 Hz
- High performance
- Flexible configuration

Figure 10. TRM, transformer input module

The self supervision of the TRM is performed on the ADM, Analog to digital conversion module, see 7.2

7.3 ADM, Analog to Digital conversion Module

- 12 analogue channels/ 1 A/D converter for each transformer module
- Sigma-Delta principle for A/D conversion
- Sampling rate > 1 MHZ
- No problem with anti-aliasing filter
- Primary filter 5 kHz
- Secondary filter 1 kHZ. Enables calibration with the transformer module also for high speed protection functions.

Figure 11. ADM analog to digital conversion unit

The analog signals to the A/D converter are internally distributed into two different converters, one with low amplification and one with high amplification, see figure 12.

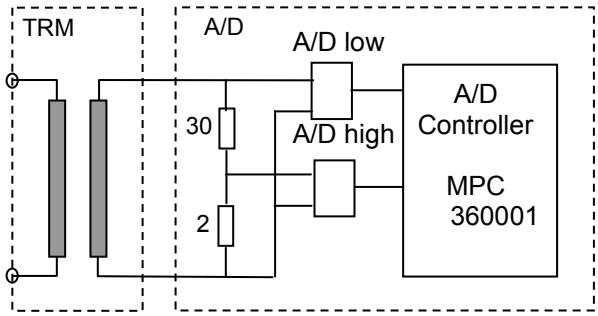

Figure 12. Analog signal supervision.

The technique to split the analog input into two A/D converters with different amplification makes it possible to supervise the incoming analog signal under normal conditions (Steady state) where the signals from the two converters should be identical. An alarm is given if the signals are out of the boundaries.

Another benefit is that it improves the dynamic performance of the A/D conversion. The self supervision of the A/D conversion is controlled by the AD-Controller function.

One of the tasks for the controller is to perform a validation of the input signals. This is done in a validation filter which has mainly two objectives: First is the validation part, i.e. checks that the A/D conversion seems to work as expected. Secondly, the filter chooses which of the two signals that shall be sent to the CPU, i.e. the signal that has the most suitable level, the *AD Low* or the 16 times higher AD-high. .When the signal is within measurable limits on both channels, a direct comparison of the two channels can be performed. If the validation fails, the CPU will be informed and an alarm will be given.

The A/D controller also performs the normal task of micro-processor watchdog functions as well as additional alarms, for example hardware and time synchronization.

7.4a BIM Binary input module

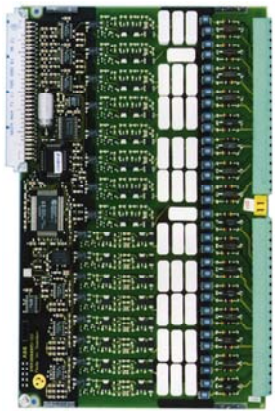

- 16 Independent Binary Inputs
- Increased interference immunity, 2 x IEC for 50 ms
- Debounce filter, T = 5 ms
- Oscillation suppression detection within 1 s; > 0 - 40 Hz
- Not suitable for pulse counting
- Threshold voltage 60% of rated auxiliary voltage

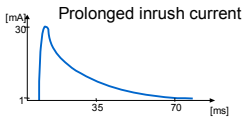

Figure 13. BIM, EMC enhanced binary input module

7.4b BIMp Binary Input module for pulse counting

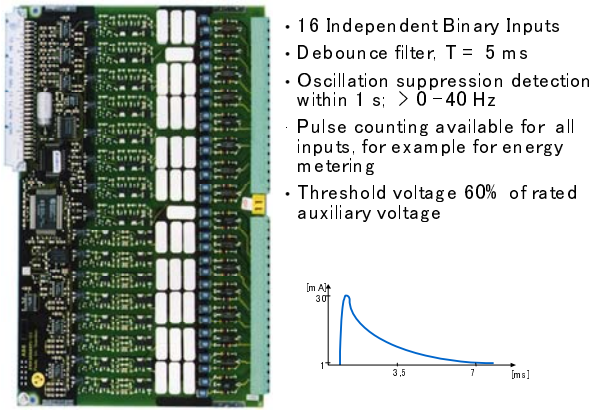

Figure 14. BIMp, binary input module for pulse counting

The binary inputs (also on IOM card) have a debouncing, suppression function

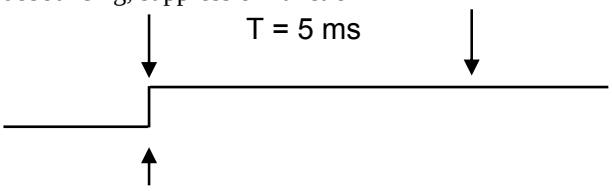

If the time elapsed since the event occurred, t > 5 ms, the event is set as valid.

The binary inputs have an oscillation suppression/ detection function. The input signal is suppressed if the number of valid event within one second > N = 0- 40Hz.

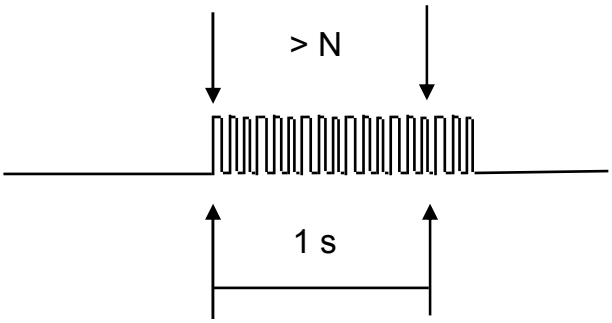

That the oscillations are within approved limits is detected if the number of valid events within one second < N= 0 – 40 Hz

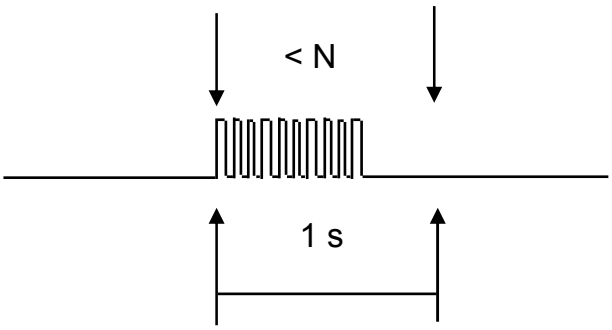

The self supervision is identical on BIM and BIMp. The self supervision is performed by the microcontroller, which carries out the self supervision functions for the BIM card and communicates with the CPU via the CAN bus, see figure 15

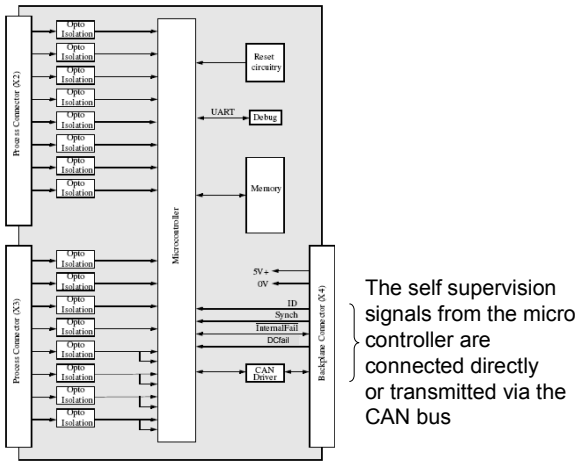

Figure 15 Self supervision of the BIM module

At power-up (before the system is in service) and during microcontroller reset, internal fail is also activated to prevent incorrect actions. When the microcontroller is running according to set criteria, the internal fail is deactivated.

7. 5 IOM, Input/output module

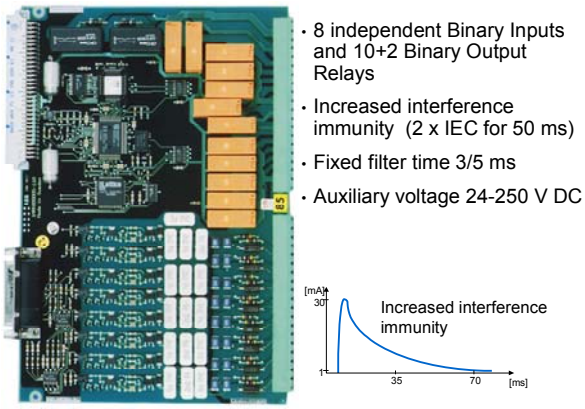

Figure 16. IOM, input/output module

The inputs have the same debouncing and oscillation suppression functions as the BIM module.

The self supervision is similar to the BIM and BIMp modules The self supervision is performed by the microcontroller, which carries out the self supervision functions for the IOM module and activates the internal fail relay directly or/and communicates with the CPU via the CAN bus, see figure 15

7.6 BOM , Binary Output Module

The binary output module has the advantage of self supervision of the command circuitry. However, that the relay contact is intact must checked by closing the relay, either by manual testing or recorded events in service.

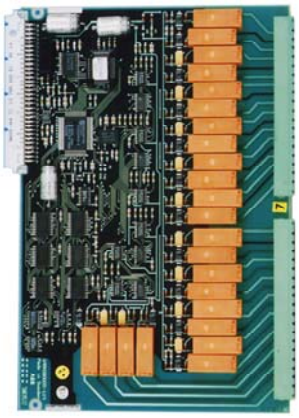

• 24 single or 12 Double pole Command Output Relays

Figure 17 BOM Binary Output module

The self supervision function checks that a close or open command has corresponding current in the close or open coil. The status of the outputs is continuously compared with the expected status. If any discrepancy occurs, an error is reported.

The self supervision covers;
- Interrupt and short-circuit in an output relay coil
- Failure of an output relay driver
- Earth faults in external operate coils

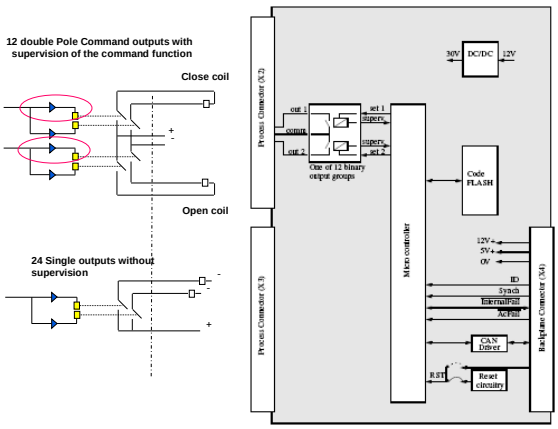

Figure 18. Self supervision on the Binary output module

7.7 SOM Static output Module

The static output module will have 6 static relays and 6 electromechanical outputs controlled by a Micro Controller Unit, MCU. This MCU is at 8051-compatible controller with CAN-controller added internally. See the block diagram over the module in figure 14.

6 static binary outputs with 6 electromechanical change over relays in parallel

Figure 19 SOM Static output module

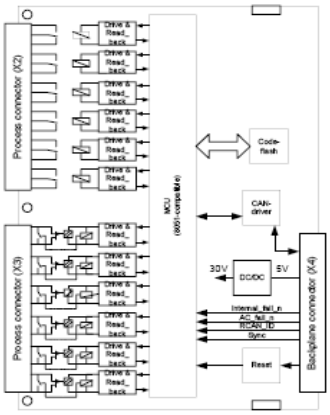

The self supervision signals from the micro controller are connected Directly to the Internal Fail relay or transmitted via the CAN bus

Figure 20. Self supervision of the Static Output module.

7.8 MIM mA input module

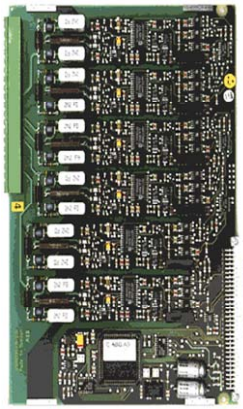

- 6 independent input channels
- Software selected input ranges
  - 0-5, 0-10, 0-20, mA
  - 1-5, 2-10, 4-20, mA
  - ± 5, ± 10, ± 20 mA
- Resolution: 16 bit
- Accuracy: 0,1%
- Independent settable digital filters
- Supervision of
  - Limits, Overflow and Max/Min Range

Figure 21 MIM, mA input module

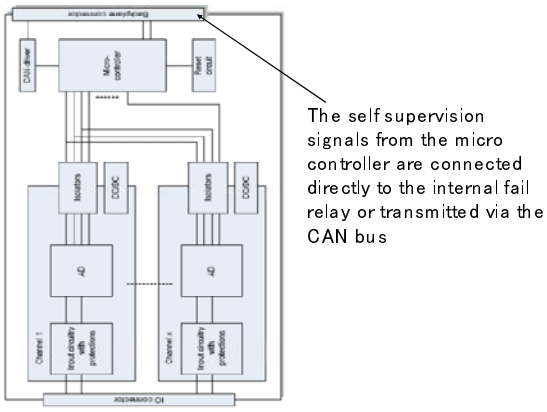

Figure 22. Self supervision of the mA input module

7.9 GSM, GPS time synchronization module

The GSM has the same microcontroller as the other I/O modules. However, the self supervision does not activate the direct internal fail function. If the GSM module fails, the current differential protection can switch to echo timing, and override an interruption in the GPS signal.

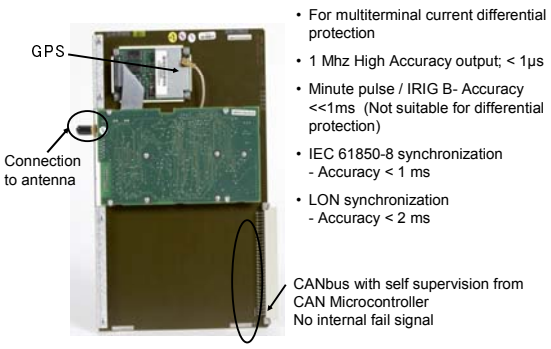

Figure 23. Self supervision of the GPS synchronization module.

7.9 Power supply module

The self supervision in the power supply module is straight forward. When voltage is lower then set limit, the internal fail is activated and the RELION 670 device is blocked. A special feature is added to prevent unwanted trip due to unbalance of the plus-minus secondary voltage for the electronic circuits. If an unbalance is detected the, switching of the power supply is stopped and the internal fail activated.

7. 10 Self supervision of communication modules

There are a number of communication modules available. They are placed either on the Analog/digital conversion module or on the numerical module. There are four types of communication modules available. In principal the self supervision of the Ethernet, LON, SPA, IEC-103 communication is done by the client, for example in a substation control system, where the communication is supervised by checksum, parity bits etc. The only module with extensive self supervision is the 64 kbit communication module for current differential protection etc.

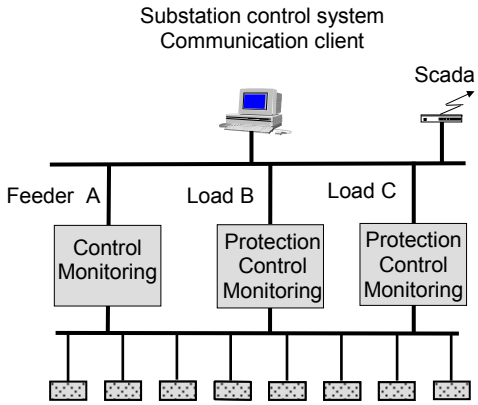

Figure 24. Communication self supervision in client

<u>Ethernet communication module with one or two ports</u>

The Ethernet module can be used for IEC 61850, TCP/IP or DNP. The self supervision activates a internal signal when there is an error in the IEC 61850 device (Hardware), IEC61850ERROR, see section 6.

<u>LON, SPA, IEC -103 communication modules</u>

Normally the self supervision is carried out by the client as for the Ethernet module. However for LON a self supervision internal signal is available on the HMI, LMD ERROR, LON device error status. (Hardware fault)

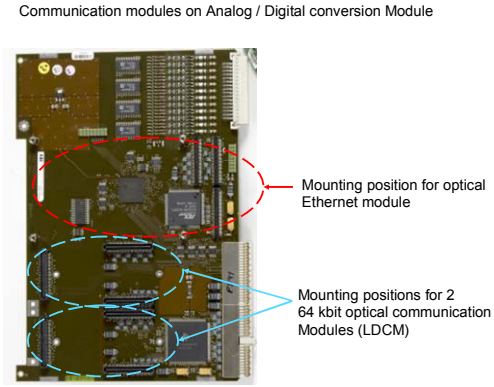

Figure 25. Location of communication modules on the A/D converter

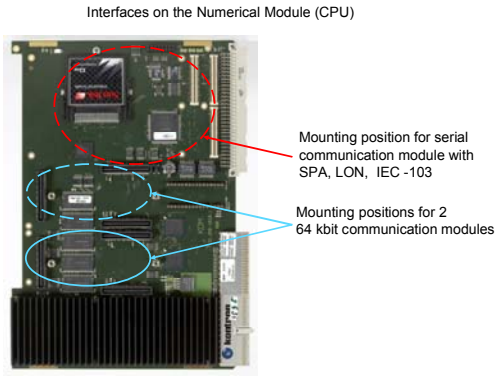

Figure 26. Location of communication modules on the numerical module /NUM)

LDCM 64 k-bit communication module

LDCM stands for Line Differential Communication Module. One to four 64 kbit communication modules can be placed on the A/D and NUM modules.

Each LDCM has an extensive communication self supervision. Some of the self supervision signals are available only on the HMI, but a number of the signals can also be configured to the event recorder.

HMI Info				Signal Name	SMT-CRM	SMT-CRB
	Normal (Example)	Faulty (Example)	Specification			
TransmDelay in Echo mode 1)	2 ms	-	Time	Round trip delay/2 + set asymmetric delay		
Transmission delay in GPS mode 1)	2 ms		Time	Actual transmission delay + measured asymmetric delay (+or -)		
NoOfShinterr	50	-	Counter	No of short interruptions, 20-50 ms		
NoOfMEDinterr	10	-	Counter	No of medium interruptions, 50-200 ms		
NoOfLonginterr	5	-	Counter	No of long interruptions, >200 ms		
CommStatus	OK	NoRXD	Status	Communication status/no of received messages		
COMFAIL	0	1	Status	Communication failure (>set delay 100 ms in service, 5-10 ms for fault tracing.)	19	19
NoOfTXD	100.000	<100	Status %	No of sent messages		
NoOfRXD	100.000	<75"	Status %	No of received messages		
Ybit	0	1	Status	Detected error in incoming message in remote end	13	13
AsymDelay 1)	0,5 ms	-	Setting/GPS ms	Asymmetric delay (Setting in echo mode or measured with GPS timing.)		
NOCARR	0	1		No carrier is detected in the incoming message. Group signal - Logical OR for: • LINK_LOST No input data stream at the optical receiver • SYNC_LOST The clock synchronization is lost • C37 ERROR Error at the C37.94 fiberoptic receiver (Faulty format)	25	25
NOMESS	0	1	Status	No start and stop flags in incoming message	24	24
ADRERR	0	1	Status	Incoming message from non-valid address	14	14
LNGTHERR	0	1	Status	Incorrect length for the incoming message	23	23
CRCERROR	0	1	Status	CRC-error in incoming message	15	15
TRDELERR**	0	1	Status	Transmission delay error, > 40 ms	16	N.A**
SYNCERR**	0	1	Status	Error in echo timing synchronization	17	N.A**
REMCOMFAIL	0	1	Status	Error in received message at remote end	18	18
REMGPSER**	0	1	Status	Error in GPS synchronization at remote end	20	N.A**
SUBSTITU**	0	1	Status	Link error, differential protection blocked. Analogue values are substituted with zero, ref. disturbance recorder.	21	N.A**
LOWLEVEL	0	1	Status	Low signal level in the receive link	26	26

The signals that are marked with a number in the two columns to the right can be configured to the event recorder by the Signal Matrix Tool (PCM 600).

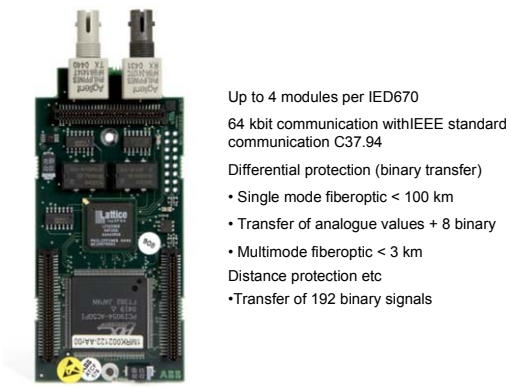

Figure 27. 64 k-bit fiber optic communication module, LDCM

8. SELF SUPERVISION BY SOFTWARE

The software is structured in different levels according to fig. 18

- Application software containing a software library for different functions, the Application Functional Library, AFL, programmable logic/ timers, HMI etc. including product specific configurations

- Base software including general applications such as self supervision etc

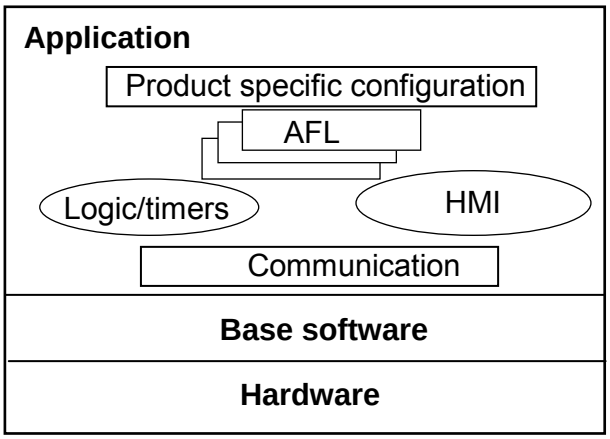

Figure 28. Software structure

Base software

The base software is close to the hardware, incorporating basic elements such as start-up routines, self supervision, operative system, etc. The operative system is an embedded real time system, which enables the safe execution of program code in real time.

Application, product specific configuration

The application functional library, AFL, contains all the protection, control and monitoring functions as software modules, which are available, as well as possibilities to connect future modules. A part of the application library for protection and control functions are shown in figure 29.

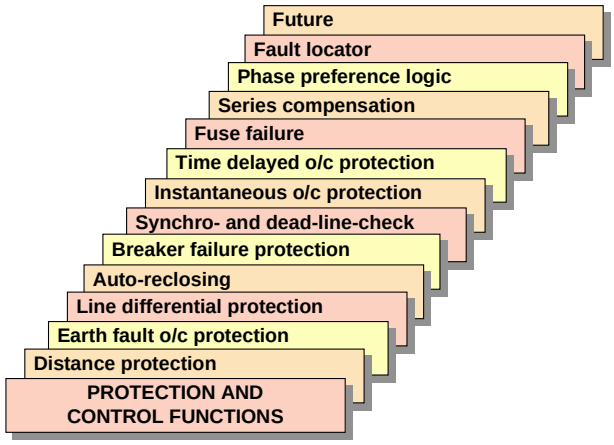

Figure 29 Application functional library for protection and control functions (AFL)

For each type Relion 670 series device a product specific configuration is made. The configuration is made with a selection from the functions in the AFL, the required number of logic elements, AND gates, OR gates, and timers as well as external communication and connections to the HMI. All the elements are then configured with connections between the functional blocks and logics/timers to operate according to requirements for the various applications, distance protection, differential protection etc.

8.1 Self supervision functions

The signaling structure for the software is the same as for the hardware. The difference is that additional internal signals for ERROR and Warnings are available, which are the result of the software self supervision

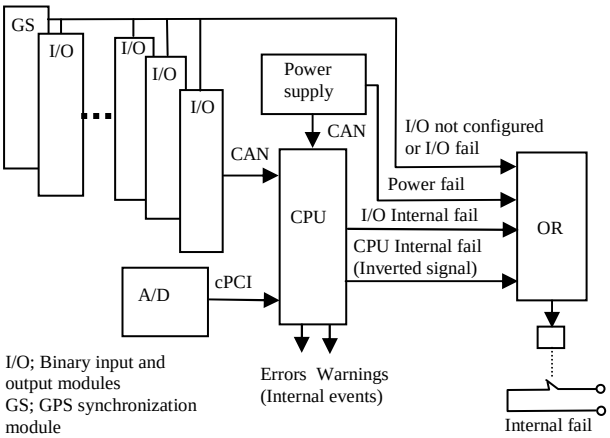

Figure 30. Signal structure for software self supervision

The supervision is divided in different parts parts, one that is performed at start of the protection and one that is performed continuously during normal service. The main part of the supervision is made by the main processor on the main processor module; another part is made by a processor on the A/D converter. The I/Os are supervised by the built in microcontroller, connected to the CAN bus. A basic function is of course the use of "watch dogs" for all the microprocessors as well as control of the check sums for memories of the programs and settings.

8.2 New self supervision methods

A couple of new methods compared with previous generations of numerical relays that improves the software supervision have been introduced in the RELION 670 series.

8.2.1Error Correcting Code; ECC

Most of the RAM-memories in Relion 670 are provided with "Error-Correcting Code (ECC) memory", which facilitates automatic error correction, larger then one bit. This is achieved by special circuits that generate checksums automatically. Also the information transfer to and from the FLASH PROMS is supervised by Error Correcting C methods.

An error-correcting code (ECC) or forward error correction (FEC) code is redundant data that is added to the message on the sender side. If the number of errors is within the permitted frames for of the code, the receiver can use the extra information to discover the locations of the errors and correct them. Since the receiver does not have to ask the sender for retransmission of the data, a back-channel is not necessary in forward error correction, so it is suitable for simplex communication such as broadcasting etc.

The ECC does not affect the bit error rate and data rate .

8.2.2 Fault tolerant file system (FTF)

The Fault-tolerant file system is an extension to the ordinary disc files to make them fault-tolerant. Once a fault-tolerant file has been successfully created, then it is impossible to corrupt it (e.g. by disrupting the power supply where a fault tolerant file is in operation. The data integrity of is achieved by maintaining two versions of the files, one original version and one backup version. All operations are to be performed on either the original or the backup version, never on both at the same time.

The integrity of the data is normally verified by checksum methods. If the original and backup versions verify correctly, then the FTF is running correctly.

If the original and backup versions fail verification, the FTF rectifies the discrepancy. If the original does not verify, but the backup is OK, then the backup shall replace the original and vice versa. This means that the FTF data will revert to the last good version in case of single errors.

If errors are detected in both the original and the back-up the internal self supervision signal; FTF Fatal error will generate an Internal FAIL, and block the relay.

8.3 RELION 670 self supervision

Relion 670 series has a sophisticated self supervision. On faults in the vital parts of the protection the relay is blocked. For some faults, functions not involved can continue to operate. Also the application functional library contains functions that can connect back-up function if specified, for example a distance function can be used as back-up for the differential function if the communication fails. For faults that do not effect the function a Warning is issued, for fatal ERRORS the relays is blocked and an ERROR signal generated from the CPU, which gives internal fail.

The principal diagram of the software self supervision, with Internal Error Signals is shown in figure 20 below.

The external signal names are given under section 6, but further explanations are available below.

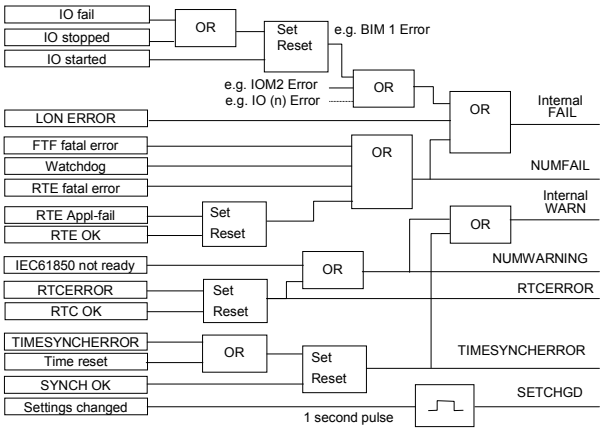

Figure 31. Internal self supervision with internal signal names.

I/O signals ; fail, stopped or started can either be from the on board I/O microcontrollers watchdog or from the CPU with reference to information exchange over the CAN bus.
LON ERROR refers to a fault in the hardware of the LON driver. LON is one of the communication alternatives for station communication
FTF fatal error. Fault tolerant file system error, see section 4.4.
Watchdog; The internal watchdog in the CPU
RTE fatal error. RTE stands for Run time engine. The function is program execution control, i.e. checks that the program runs according to specification. (Base software)
RTE application error; the Run time Engine also controls that the application specific software is running correctly. If the application execution is incorrect, the application error signal is given.
RTE OK. The programs are executed according to specification
IEC 61850 not ready. This signal can be issued for a number of reasons, for example the configuration from the Signal Matrix Tool (GOOSE) not downloaded
RTC Error. Real Time Clock or GPS not working correctly, for example the back-up capacitor discharged.
RTC OK
Synch ERROR. The external time synchronization source is faulty. (If specified)
Time reset. To reset the time, for example from normal time to daylight saving time
Synch OK. External source available
Setting changed. The relay is blocked during setting change

8.4 Self supervision during start and stop.
The start and shut down of the protection at switching on and off the dc supply voltage is made in sequence. In this way correct data will always be available to the measuring elements, ensuring correct function at switch on and switch off of the dc power supply, and blocking of the device to avoid incorrect function when measuring data are unsecured. (During start a time-out control is included.)

At start, the configuration is checked. During the configuration with PCM 600, each modules type and position is specified. If for example a I/O module is missing or in the wrong position the self supervision will give internal fail. **When the fault is rectified it is necessary to make a reconfiguration.**

Built-in HMI
-settings
- general settings
- I/O modules
- Reconfigure

Note. The check of configuration does not include the SPA/LON and Ethernet communication modules. These modules have self supervision on the communication module itself.

8.5 Self supervision during operation
The self supervision in an integral part of the design, see the impact of dependability and security on self supervision in section 9.
The supervision on the main CPU module is divided in two groups. The faults which can cause unwanted trip are blocked and signaled as errors, and the remaining self supervision functions are connected for warning

Program execution
The real time engine supervises that the program execution is performed in correct sequence. If this is not the case a reset is sent to the main processor. The watchdog function contributes to the integrity of the application functions. The Real time engine also supervises that the logic is executed correctly.

A/D converter.
The main processor supervises, that data via the cCPI-bus is received with correct time frame and performs a check sum control for each received set of data every ms. (At start, the check is that data are received.). In addition the A/D converter has an internal Power On - check. In addition the analogue signals are supervised by comparing output from two different A/D converters, see section 7.2

Memories
The main check of the RAM, ROM and Flash prom memories is performed by the Fault Tolerant File system, see section 8.2

I/O nodes.
The I/O nodes are indirectly supervised from the main CPU. On the I/O boards, the internal communication (CAN bus) is supervised as well as Read/write RAM checks an ROM checksum. A watchdog function is also provided onboard the I/Os by a microcontroller.

The I/Os have an 8051-compatible micro controller with CAN interface. In the BOM the 80CE598 is used. This is a ROM-fewer devices that demands an external ROM for the firmware.

In addition to the execution of control signals, the microcontroller also has a number of watchdog functions. Also power-up and power down functions are performed by the microcontroller.

The internal communication between the main CPU module and the I/O boards including the power supply, GPS modules etc is carried out by a Master-Master serial data bus, **CAN bus**. Each I/O module and the CPU module have a special hardware circuit for the communication control. The bus is continuously supervised. As soon as an incorrect message is detected, determined by a single node, the message is repeated. Via different built in facilities in the CAN bus excellent facilities for error detecting and correction is provided. I.e. a faulty node can be identified and disregarded, without disturbing any other node. The error handling is rather sophisticated, with counters for error messages, bus.

Binary in Binary Output

Most of the electronics is supervised. However, the Binary in opto-coupler circuits and the Binary output relays are not supervised. The probability for a fault was considered to be too low to justify additional circuitry for self supervision. The final check to activate the I/O input and output circuits cannot be performed, thus limiting the self supervision possibilities. The binary input/outputs can only be checked by manual testing or by monitoring the performance during events in normal service.

EMC- components.

Additional components are used to improve the interference withstand capability, both for IEC tests and interference in service. Such components are not supervised. Typical components are MOV, metal oxide varistors, which limits the over voltages to a specified level, capacitors which limits and slows down interference spikes.

9. IMPACT ON DEPENDABILITY AND SECURITY BY SELF SUPERVISION.

The impact on dependability and security are evaluated at many levels of the application software, for example if data are relevant or not, to trip or not to trip based on consecutive or parallel decisions.

Dependability and Security are unfortunately in conflict, for example, a trade off for a higher degree of security is inevitably a lower degree of dependability. An optimal balance must be found. For example protection of power transformers, where external faults are much more common than the relatively few and rare between faults and security is at least as important as dependability.

Dependability and Security are not a result of a single one measure, i.e. feature or algorithm in the protection function, but are a result of several measures of the protection function, indeed of the whole concept applied.

9.1 Dependability (ability to operate when needed):

Dependability is assured by forming a suitable operates - restrain characteristic. For example in a differential protection, all possible internal faults, the operate (differential) current must be well above the operate - bias characteristic. Dependability can be enhanced by incorporating several different sub-protections into the application functional library

For example, the Negative Sequence Sensitive Differential Protection detects a small inter-turn faults in transformers before they can develop into more severe (and much more costly to repair!) faults including transformer's iron core. Another example is the Unrestrained Negative Sequence Protection which is very fast and makes the Relion 670 transformer protection type RET 670 one of the absolutely fastest differential protections on the market.

9.2 Security (ability not to operate for external disturbances):

All decisions on all decision levels must be confirmed several times in succession in order to take a decision and go to the next level. The final trip command request must be confirmed at least twice in order to issue a trip command on the output of the protection. In the current differential protection type RE 670, five consecutive trip decisions must be made before issuing an output close command.

The so called "cross-block" is an excellent measure to make a transformer differential protection more secure. Even if a user does not apply it, it is temporarily introduced when an external fault is detected by the internal/external fault discriminator.

The harmonic block algorithm and the waveform (pattern recognition) algorithms are excellent measures which prevent maloperation under normal events such as energizing of the power transformer. The three-section operate - restrain characteristic with a high slope in the third section is a measure in order to prevent maloperation due to CT saturation.

Sometimes the user can decide what to emphasize, the dependability or security. Such an example is the directional characteristic of the internal/external fault discriminator. In the following figure, the security is higher that dependability:

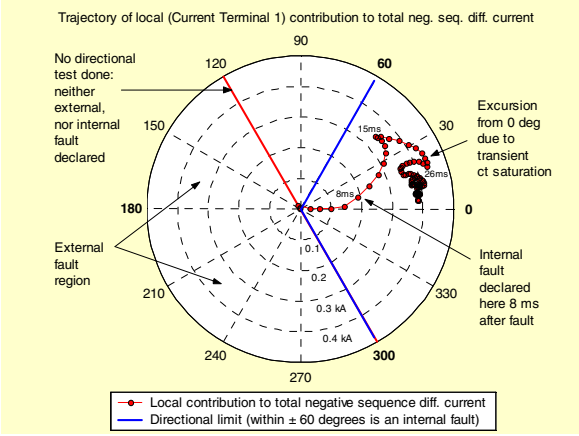

Figure 32 Negative sequence protection

In conventional schemes, security is enhanced by series connection of protections at the cost of dependability (and availability). On the other hand, dependability may be increased with parallel protections, at the cost of security. A rely with self supervision can be considered to give improvements both in dependability and security according to figure 33

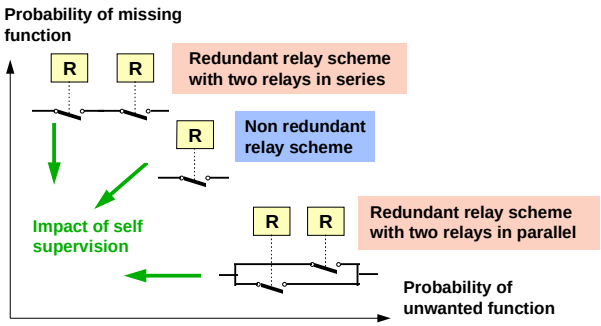

Figure 33 Influence of self supervision on dependability and security

However, since the whole fault clearing system is not supervised or automatically tested, the automatic test system must be supplemented with a regular manual check with reference to dependability. Thus, it must be stated that the main impact of the self supervision is on the security, i.e. the risk for unwanted function has been decreased. The performance of the device can also be supervised by monitoring of events in real service, for example that output relays were properly closed when a trip command was issued.

9.3 Impact of self supervision on single protection

In Figure 23 below, the curve "I" shows the resulting probability of failure to operate over the years when the protection is manually tested, as assumed above. (The probability of failure to operate can be reduced if the fault detection ability of the manual testing is raised.) The test interval every second year is maintained. By assuming that the manual testing is replaced by continuous automatic supervision, the probability of failure to operate will be according to curve II.

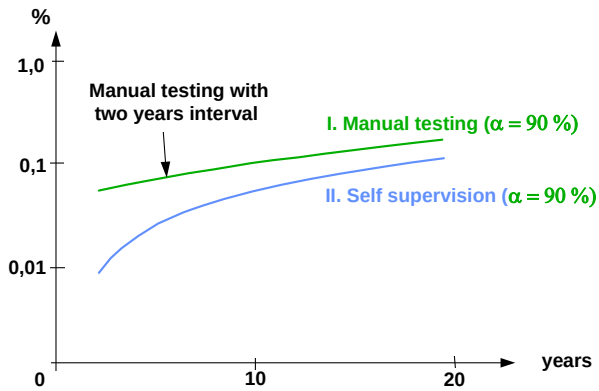

Figure 34. Probability of failure to operate for a single protection.

For numerical equipment the self supervision can be given a α > 85 % with very limited influence on the complexity of the software. Thus, self supervision in numerical equipment significantly improves both security and dependability.

When the resulting probability of failure to operate of a single protection manually tested cannot be accepted a redundant protective relay has to be used. Only by redundant protective relays a substantial increase in the dependability can be achieved.

9.4 Impact of self supervision with redundant protection.

In figure 35, the curve I and II shows the resulting probability of failure to operate for a redundant protection, Curve I represents only manual testing every second year and curve II an "ideal" automatic testing or supervision device. The fault detection capability for the testing and supervision associated with curves I and II are 90 %.

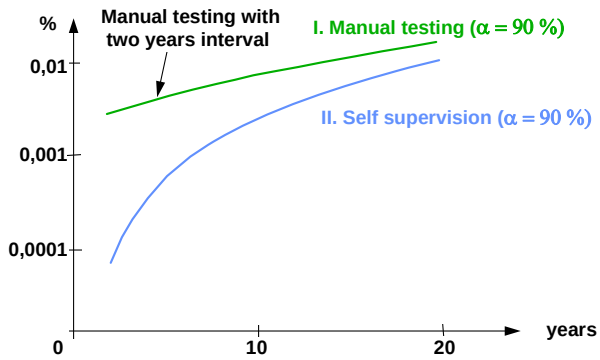

Figure 35. Probability of failure to operate for redundant protection

The "ideal" self supervision will reduce the average probability of failure to operate over a 20-year period to 0.007. This reduction is equivalent to one failure to operate out of 140 operations.

The reduction is achieved under the assumption that the two self supervision functions in the devices in main 1

and 2 protective relay's are "ideal", i.e. are not introducing any new risks for failure to operate.

10. ADDITIONAL SUPERVISION VIA PROCESS SIGNALS

The process signals can also be utilized for self supervision connected to a binary output and to the HMI, local or remote via a SMS or SCS system.

- The **unsymmetry current** check can be coupled to an alarm output and detects faulty parts in the current circuits IL1, IL2, IL3.

Eventually also the following functions can be utilized, but the difficulty is to distinguish between relevant and irrelevant information.

- The **low voltage** check can detect faulty parts in the voltage circuits for UL1,UL2, UL3 and be coupled to an output.

- The **disturbance recorder** triggering facilities can detect faults in the analogue inputs (5I, 5 U), <I >I, <U, >U etc. and be connected an output.

- The **overload** function can detect faults in IL1, IL2, IL3 and be connected to an output.

In addition to the process signals, all **phasor values** are available. The phasor values have not (yet) been utilized for self supervision. However, the acceptable limits for deviation or e.g. comparison between Main 1 and Main 2 can fairly easy be performed via an SMS or SCS system.

11 Conclusions

The conclusion by a joint study of two utilities in Sweden was **that automatic testing or supervision cannot fully replace manual testing** when increased **dependability** is concerned. The main reason is that not the whole fault clearing system can be tested. **Self supervision** will increase the dependability, security and availability of the protection equipment, but will have the main impact on **security**

The fault detection capability of all manual testing and self supervision must be high, >90 % respective >70 % according to this study to achieve a substantial reduction in the probability of failure to operate. The achievable reduction in the average probability of failure to operate when a single protective relay is equipped with automatic testing is limited. When the probability of failure to operate for a manually tested single protective relay is not acceptable a redundant protection is preferred to automatic testing.

In practice no reduction in probability of failure to operate can be achieved with automatic testing of redundant protection. On the other hand, the security is very much improved, which makes the self supervision extremely valuable.

The joint study by the Swedish State power Board and the Swedish utility EON, has shown that the base to maintain a reliable fault clearing is manual maintenance testing at regular intervals. Therefore, an advanced and well-proven test system like the ABB COMBITEST together with regular manual tests including the whole fault clearing system cannot be replaced with automatic testing or supervision.

However, the experience so far indicates that the interval for manual tests can be significantly prolonged. The recommendation is maintenance intervals of 6 year. Also additional methods, e.g. supervision of the performance of the fault clearing including the protection equipment via disturbance recorders and event recorders are new tools to check the fault clearing capability, which can prolong the interval for regular preventive manual maintenance testing.
The mean time to repair MTTR for the Relion 670 series is > 100 years, which supports the conclusion that the regular maintenance intervals can be prolonged.

Main conclusion

Self supervision of protection and control hardware and software reduces both downtime as well as the maintenance costs, as the regular maintenance periods can be extended.

Contact us

ABB AB
Substation Automation Products
SE-721 59 Västerås, Sweden
Phone +46 (0) 21 34 20 00
Fax +46 (0) 21 14 69 18

www.abb.com/substationautomation

1MRK580172-XEN - © Copyright 2009 ABB. All rights reserved

Power and productivity
for a better world™