In Work

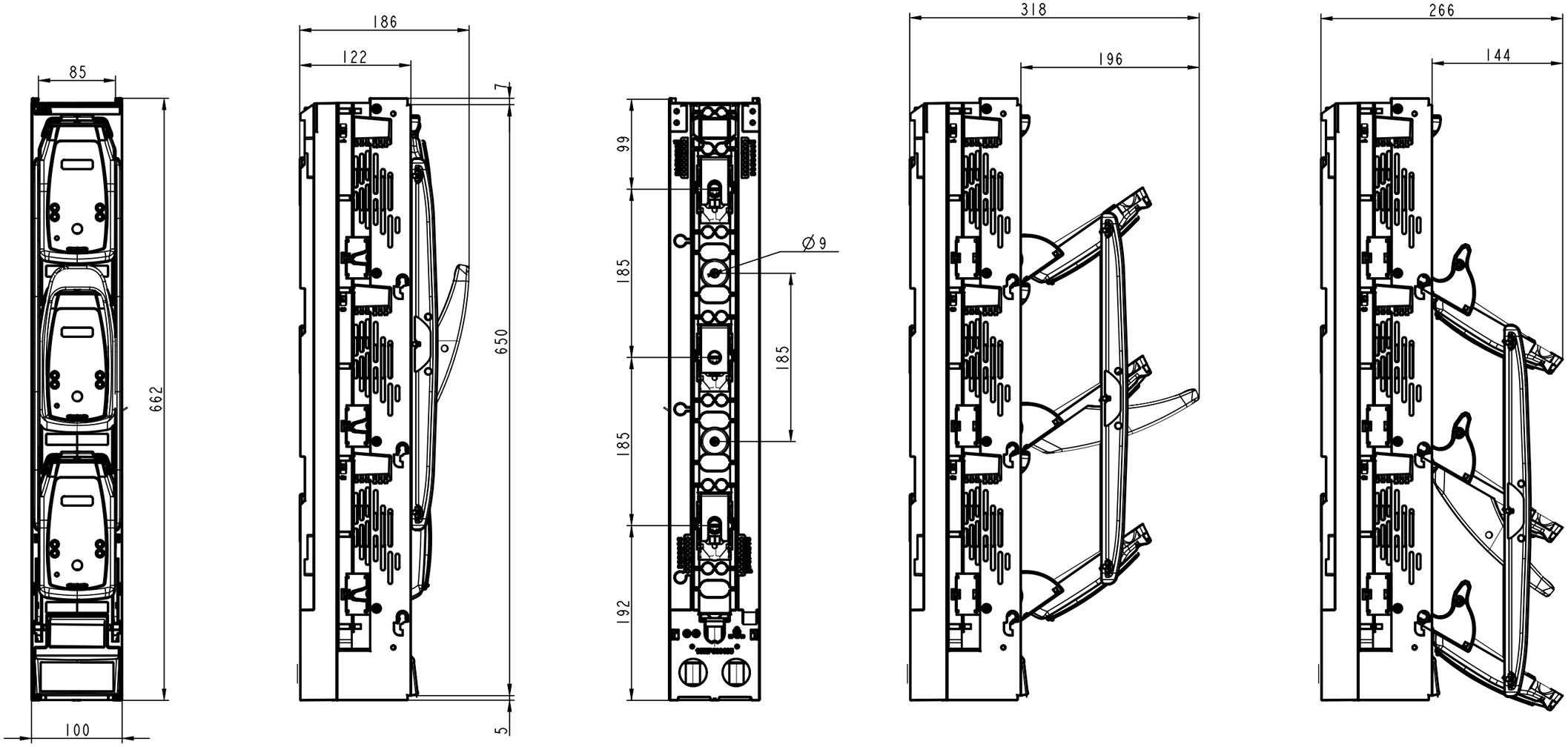

*FUNCTIONAL DIMENSIONS (Fo) (Fi) (Fc) OR ( ); CHANGED DIMENSIONS (A)

COLOR	SURFACE	TOOL	QPS N	FTS N	VTP N	UNMARKED ROUNDINGS	UNMARKED DRAFTS
RAW MATERIAL		MATERIAL NORM	NET WEIGHT 2888,2 g			VOLUME 1661,8 cm^3	AREA [.1] cm^2
CREATED 2022-07-18 Thomas-chenming Su		MODIFIED 2022-07-18 Thomas-chenming Su				APPROVED 2022-07-19 Rocky-Zheng	
ECN NUMBER	ECN DATE	PRODUCT Inline II				DRAWING FILE 1SEP620012R3020_2D A.2	
ORGANIZATION Electrification-Smart Power Business Line		DEPARTMENT RD Center CN				TOLERANCES	
ABB	TITLE (ZH)		TYPE	SCALE 1:5	FORMAT A3	LANGUAGE EN/ZH	SHEET 1/1
	TITLE (EN) ZLBM2-3P-V_DIMENSION_2D		DOC. NO. 1SEP620012R3020_2D				REV. A

Proprietary and Secret Information

We reserve all rights in this document and in the information contained therein. Reproduction, use or disclosure to third parties without express authority is strictly forbidden.
Copyright © 2022 ABB.
保密文件，经手人赋有保密义务；未经授权而披露，权利人享有追偿权利！

Rev	Description
A	
B	
C	