I.B. 38-921-18

Type R, 15 kV, 600/1200 Amp

Instructions for Vacuum Circuit Breaker

ABB Power T&D Company Inc.

TABLE OF CONTENTS

LIST OF ILLUSTRATIONS

All possible contingencies which may arise during installation, operation, or maintenance, and all details and variations of this equipment do not purport to be covered by these instructions. If further information is desired by purchaser regarding his particular installation, operation or maintenance of his equipment, the local ABB representative should be contacted.

⚠WARNING

HAZARDOUS VOLTAGE CAN SHOCK, BURN, OR CAUSE DEATH.

Do not attempt to handle, install, use or service this product before reading instruction book.

234P051H01A

SAFETY NOTICES

This breaker should be installed within the design limitations as described on its nameplate and in these instructions.

Follow your company's safety procedures.

This breaker should not be used by itself as the sole means of isolating a high voltage circuit; for the safety of personnel performing maintenance operations on the breaker or connecting equipment, all components should be electrically disconnected by means of a visible break, and should be securely grounded.
This product is intended to be operated and maintained by qualified persons who are thoroughly trained and who understand the hazards involved. This publication is written only for such qualified persons and is not intended to be a substitute for adequate training and experience in safety procedures for this device.

WARNING

DETAILED DESCRIPTIONS OF STANDARD REPAIR PROCEDURES, SAFETY PRINCIPLES AND SERVICE OPERATIONS ARE NOT INCLUDED. IT IS IMPORTANT TO NOTE THAT THIS DOCUMENT CONTAINS SOME WARNINGS AND CAUTIONS AGAINST SOME SPECIFIC SERVICE METHODS WHICH COULD CAUSE PERSONAL INJURY TO SERVICE PERSONNEL OR COULD DAMAGE EQUIPMENT AND RENDER IT UNSAFE. PLEASE UNDERSTAND THAT THESE WARNINGS COULD NOT COVER ALL CONCEIVABLE WAYS IN WHICH SERVICE, WHETHER OR NOT RECOMMENDED BY ABB, MIGHT BE DONE OR OF THE POSSIBLE HAZARDOUS CONSEQUENCES OF EACH CONCEIVABLE WAY, NOR COULD ABB INVESTIGATE ALL SUCH WAYS. ANYONE USING SERVICE PROCEDURES OR TOOLS, WHETHER OR NOT RECOMMENDED BY ABB, MUST SATISFY HIMSELF THOROUGHLY THAT NEITHER PERSONAL SAFETY NOR EQUIPMENT SAFETY WILL BE JEOPARDIZED BY THE SERVICE METHOD OR TOOLS SELECTED.

Information contained in this manual is based on the latest product information available at the time of printing. The right is reserved to make changes at any time without notice.

INTRODUCTION

In the interest of clarity, a single set of identification numbers is used throughout this book, with a particular number referring to the same component, or device, in every relevant figure or diagram.

To avoid confusion, any circuit component or device having a function or purpose as defined in ANSI C37.2 has a second identification in accordance with this standard. For example, the spring release device is identified as (8) as well as IEEE Device 52/CC.

These instructions do not attempt to provide the user of this equipment with information to resolve every possible difficulty which may occur in its application, installation, operation and maintenance. Also, as improvements in parts and assemblies are made, some parts may differ in appearance from the items as depicted in illustrations; function will be equivalent, however.

The Type R Vacuum Circuit Breaker (Figure 1) is a high voltage three pole a-c device incorporating three vacuum interrupters; when equipped with appropriate transformers and relays, the breaker will sense an overload condition and automatically first open, then (after an adjustable time delay) reclose the circuit to which it is connected. If the overload condition still exists, the unit will again automatically open and reclose the circuit. When equipped with the Type RC Reclosing relay, the breaker will cycle as many as four times before automatically locking open. A service visit can then determine the cause of the overload. A counter in the Vacuum Breaker provides convenient record for service and maintenance purposes.

Satisfactory performance of this breaker is contingent upon correct installation and adequate maintenance and servicing. Careful study of these instructions will permit the user to obtain the maximum benefits from this device.

Table I. Type R Vacuum Circuit Breaker Ratings

Nominal Operating Voltage, kV	2.4-14.4
Maximum Design Voltage	15.5
Basic Insulation Level, kV, BIL	110
Dry Withstand, 60 Hertz, kV	50
Wet Withstand, 60 Hertz, kV	45
Phase Spacing, in. (mm)	14.5 (368)
Minimum External Creep Distance, in. (mm)	17 (432)
Minimum External Strike Distance, Terminal to Ground, in. (mm)	7.25 (184)
Minimum External Strike Distance Between Bushing Terminals, Phase to Phase in. (mm)	12 (305)
Interrupting Time, 60 Hz Base	3.5 Cycles or Less
Time Between Coil Energization and Contact Parting	3 Cycles or Less
Closing Time	7 Cycles
Reclosing Time	0.33 Seconds
Continuous Current, Amps R-1	600
Continuous Current, Amps R-2	600-1200
Continuous Current, Amps R-3	600-1200
Continuous Current, Amps R-4	600-1200
Interrupting Capacity, Sym. Amps R-1	12,000
Interrupting Capacity, Sym. Amps R-2	16,000
Interrupting Capacity, Sym. Amps R-3	20,000
Interrupting Capacity, Sym. Amps R-4	25,000
Momentary Rating, Asymm. Amps R-1	20,000
Momentary Rating, Asymm. Amps R-2	25,000
Momentary Rating, Asymm. Amps R-3	32,000
Momentary Rating, Asymm. Amps R-4	40,000

Notes:

(1)—Rated frequency, 60 Hertz
(2)—Voltage range factor (k)=1.0, for all ratings
(3)—Dimensions in mm shown in parentheses
(4)—The three second rating is the same as the Interrupting Capacity.

RECEIVING, HANDLING AND STORAGE

Each breaker is completely assembled and tested at the factory prior to being prepared for shipment.

This equipment was packed and shipped in perfect condition. If damage is noted, call the carrier at once for inspection, and request an inspection report. File formal claim with the carrier, supported with paid freight bill, inspection report, and invoice. The local ABB Sales Office should be notified.

Receiving Inspection

Upon receipt, it is important to inspect promptly to be certain that the correct material has been received. In case of shortage, immediately notify the local Sales Office of ABB.

Check all parts against the shipping list as they are unpacked. Instructions and literature packed with the breaker should be kept with the unit. The low voltage control cabinet provides a convenient place to keep this instruction book, a copy of the schematic diagram, and the card carrying the service record of the unit. Additional copies may be obtained upon request from the local Sales Office.

If the breaker is not to be placed in service immediately, it is essential that proper care be exercised in the handling and storage, to insure good operating conditions in the future.

Handling

CAUTION

LIFT COMPLETE BREAKER USING TWO-CHAIN HOIST. HOOKS SHOULD ENGAGE THE TWO LIFTING BRACKETS. DO NOT LIFT BY THE BUSHINGS OR TERMINAL CONNECTORS, AND EXERCISE CARE THAT HOOKS OR CHAIN DO NOT DAMAGE THE PORCELAIN BUSHING INSULATORS.

Storage

The breaker is shipped completely assembled and may be stored as received, in an indoor or outdoor location. If stored outdoors or in a location of high humidity, the heaters should be energized to maintain insulating members and mechanism parts free of condensation. Breakers with rechargeable batteries should have power of the proper voltage and frequency supplied to the input of the charger assembly; a periodic check of battery voltage is also advised.

GENERAL DESCRIPTION

The Type R Vacuum Circuit Breaker is made up of three basic sections: The high voltage compartment, the low voltage or control compartment, and the mounting provisions.

High Voltage Compartment

The high voltage compartment is fabricated of steel, finished with corrosion-resistant paint. It encloses the lower section of the bushings, the current transformers (when present), the vacuum interrupter assemblies, and the operating linkages. Copper studs through the porcelain entrance bushings connect the high voltage terminals to the vacuum interrupters. The floor of the high voltage compartment isolates the high voltage components from the low voltage compartment.

Porcelain Bushings

Type R Circuit Breaker is equipped with high-strength porcelain bushings. Stud (1.125-12), four-hole pad or 4-bolt clamp type terminals are available for 600 ampere rating. Clamp type permits horizontal or vertical connection to conductors from No. 6 to 200 MCM (.16 in. to 1.63 in. [4.1 mm to 41 mm]). Stud type terminals (1.250-12 are supplied on 800 and 1200 ampere ratings.

Bushing Current Transformers (BCT)

The high voltage bushings extend through the five-lead multi-ration bushing current transformers mounted in the high voltage compartment. The transformers may be used for additional instrumentation such as a thermal demand ammeter, but be certain that total burden is not exceeded. Consult schematic diagram for complete information.

The bushing current transformer tap connections are wired to terminal boards in the control compartment of the Vacuum Breaker. To change the ratio of the transformers, select the proper connections on the terminal blocks.

CAUTION:

PRIOR TO SHIPMENT, SHORTING SCREWS ARE PLACED IN THE TERMINAL BLOCKS TO WHICH THE CURRENT TRANSFORMERS ARE CONNECTED. THESE SHORTING SCREWS SHOULD BE REMOVED ONLY AFTER VERIFICATION THAT THE CURRENT TRANSFORMER TERMINALS ARE CONNECTED TO INSTRUMENTS, METERS, OR OTHER CONTROL DEVICES. NEVER DISCONNECT SUCH DEVICES WITHOUT FIRST VERIFYING THAT THE SHORTING SCREWS ARE SECURELY IN PLACE.

Refer to the wiring diagram or nameplates for specific information on BCT's. (Figure 3 illustrates a typical BCT nameplate.)

Table II identifies terminal markings, ratios, and d-c resistance for standard 600:5 and 1200:5 BCT's.

Current Interrupter

The Type R Breaker utilizes three vacuum interrupters, supported by six station post insulators. Operating force from the mechanism is transmitted through porcelain pull rods to bell crank plates. Insulation—between tank and interrupters—between interrupts—and between mechanical linkage and other components—is provided by air. Switching and interrupting are accomplished within the vacuum interrupter; there are no arc products generated. Shock of interruption is virtually non-existent, and no venting is required.

Operating Linkages

Insulated operating rods transmit energy from the operating mechanism in the low voltage compartment to the moving contact of the vacuum interrupters. (Figures 2 and 16)

Table II. Current Transformer Connections

600:5 Multi Ratio Current Transformer			1200:5 Multi-Ratio Current Transformer		
Terminal	Ratio	Ohms @ 25°C	Terminal	Ratio	Ohms @ 25°C
X2-X3	50-5	.015	X2-X3	100-5	.052
X1-X2	100-5	.029	X1-X1	200-5	.104
X1-X3	150-5	.044	X1-X3	300-5	.156
X4-X5	200-5	.058	X4-X5	400-5	.208
X3-X4	250-5	.073	X3-X4	500-5	.260
X2-X4	300-5	.088	X2-X4	600-5	.312
X1-X4	400-5	.117	X1-X4	800-5	.416
X3-X5	450-5	.131	X3-X5	900-5	.468
X2-X5	500-5	.146	X2-X5	1000-5	.520
X1-X5	600-5	.175	X1-X5	1200-5	.624

Thermal rating is 90 times rated current for one second; mechanical, momentary rating is 180 times rated current.

LOW VOLTAGE COMPARTMENT

This compartment contains the control panel and mechanism to operate the vacuum interrupters. (Figures 4 & 7).

Mechanism

The operating rod assembly provides attachment between the movable contact of the vacuum interrupter and the main operating shaft of the breaker. (Figure 2) Each Vacuum Breaker is equipped with three such operating rod assemblies. The rotation of the main shaft imparts a vertical motion to the operating rod, upward for closing the interrupter, and downward for opening. This main shaft also carries the energy stored in the trip springs and is arranged so the power to trip the interrupter is present any time the interrupter is in the closed position, this assuring positive breaking operation.

The Vacuum Breaker can be manually operated for service or maintenance. Manual tripping is accomplished by pulling a trip hook which extends to the outside of the low voltage compartment, on the left hand side. For manual closing, the low voltage door must be opened, permitting access to the "PUSH TO CLOSE" bar, which closes the breaker. In the absence of closing power, the closing springs can be manually charged (Figure 11).

Auxiliary Switch Assembly

The auxiliary switch assembly is mounted in the low voltage compartment (See Figure 4). Standard breakers are supplied with two mechanically-driven rotary type switch, with 8 sets of contacts, four "a" and four "b" (See Figure 15 for Typical Schematic Diagram); extra contacts are available, when ordered, for external use, as desired. Three additional auxiliary switches can also be supplied on request, adjusted for any specified combination of "a" and "b" contacts. The contacts of these switches will carry 15 amperes continuously, with interrupting capacity as shown in Table III.

Operation Counter and Position Indicator

The red and green targets of the position indicator are marked "CLOSE" and "OPEN" to show contact position. The operations counter is mounted below the indicator window. (See Figure 5)

Heaters

Heaters are continuously energized to prevent the condensation of moisture inside the mechanism compartment. When specified, extra heaters, with thermostat control can be supplied. Consult pertinent connection or schematic diagram for the specific breaker, to ascertain types and ratings of heaters supplied.

Terminal Blocks

Terminal blocks terminate the control wiring and the secondary leads from the bushing current transformers (BCT's).

CAUTION:

PRIOR TO SHIPMENT, SHORTING SCREWS ARE PLACED IN THE TERMINAL BLOCKS TO WHICH THE CURRENT TRANSFORMERS ARE CONNECTED. THESE SHORTING SCREWS SHOULD BE REMOVED ONLY AFTER VERIFICATION THAT THE CURRENT TRANSFORMER TERMINALS ARE CONNECTED TO INSTRUMENTS, METERS, OR OTHER CONTROL DEVICES. NEVER DISCONNECT SUCH DEVICES WITHOUT FIRST VERIFYING THAT THE SHORTING SCREWS ARE SECURELY IN PLACE.

The typical hinged control panel accommodates the following: (Figure 7)

1. Breaker Control Switch with red and green indicating lights.
2. Overcurrent relays, including:
   Three Type CO Phase Relay
   One Type CO Ground Relay and Ground Bypass Switch (optional)
3. Three thermal demand ammeters.
4. One Type RC automatic reclosing relay and RC relay cutoff switch.

For operating and maintenance of the Type CO overcurrent relay, see I.L. 41-100 and I.L. 41-101. For operation and maintenance of the Type RC automatic reclosing relay, see I.L. 41-661. These instruction leaflets are available from the nearest Sales Office of ABB.

Table III. Interrupting Capacity of Auxiliary Switch Contacts

	Non-Inductive Circuit		Inductive Circuit	
Volts	Single Contact	Two Contacts In Series	Single Contact	Two Contacts In Series
24/48 VDC	40 Amps	40 Amps	20 Amps	40 Amps
125 VDC	11 Amps	25 Amps	6.25 Amps	12.5 Amps
250 VDC	2 Amps	5.5 Amps	1.75 Amps	3.5
115 VAC	75 Amps	75 Amps	15 Amps	22 Amps
230 VAC	40 Amps	70 Amps	8.5 Amps	15 Amps

Contacts will carry 15 Amps continuously or 250 Amps for 3 seconds.

Breaker Control Switch

The breaker control switch allows an operator to manually open or close the interrupters by electrical means.

Panel Lights

The red panel light indicates the interrupters are closed and the vacuum breaker is functioning properly. The green panel light indicates the interrupters are open, but does not necessarily indicate an overcurrent condition exists, because the unit may have been manually tripped.

Ground Cutout Switch

The ground cutout switch (optional) has two positions. In the NORMAL position, when an overcurrent is detected in the ground circuit, or an out of balance condition between the phases is detected, the Vacuum Breaker will react in the same sequence that it would if an overcurrent were detected in one of the phases. With the toggle switch in the BLOCKED position, an overcurrent in the ground circuit or an out of balance condition between the phases will be ignored by the sensing relays.

RC Cutoff Switch

The RC cutoff switch has two positions. In the NORMAL position, the reclosing relay is allowed to perform the functions for which it is adjusted. In the BLOCKED position, the breaker will lock open following the first interruption.

Side Panel

The second panel bolted to the inside wall of the control compartment mounts the control relays, low voltage circuit protection devices, and terminal blocks for the control wiring. Optional equipment, such as a capacitor trip device, remote control relay, or additional terminal strips are mounted on this panel. There is provision in the bottom of the cabinet for conductor entrance.

MOUNTING PROVISIONS

Formed steel supports mount the vacuum breaker to its foundation, and are adjustable in height in six inch (152 mm) intervals.

STANDARD PRODUCTION TESTS

Standard production tests, made in accordance with USA Standard C37.09-5, include:

1. Verification of components.
2. Verification of BCT's, style number, polarity, ratios, and connections.
3. Verification of all wiring, per pertinent connection diagrams.
4. Manual operation: close, trip, functioning of counter, and permissive control switch (IEEE Device No. 69).
5. Electrical operation:
   a) Close, trip and latch check switch (IEEE Device No. 52/LC).
   b) Spring charging motor, closing device, and tripping device, per Table IV below.

*** CAUTION:**

IF AC CONTROL POWER IS TAKEN FROM THE LINE THE BREAKER IS PROTECTING IT COULD, UNDER SYSTEM FAULT CONDITIONS, DROP BELOW THESE MINIMUM VALUES. IF THIS OCCURS, THE BREAKER WILL NOT TRIP. THIS THEN WOULD REQUIRE THE FAULT CLEARED BY AN UPLINE DEVICE.

(Devices are checked at minimum and maximum values.)

   c) Measure of opening time of interrupter after rated voltage is applied to trip coil; maximum allowable time is .05 seconds (three cycles on 60 Hertz basis).
6. Check the functioning of all switches: control, non-reclosing, ground fault bypass, etc.
7. Contact resistance: Three readings are taken on each phase of a complete breaker. Typical values do not exceed 350 micro ohm (.00035 ohms).
8. Contact Speed: Phase farthest from mechanism is equipped with Hewlett Packard Transducer, Model 7DCDT-500; a storage oscilloscope displays analogue voltage to permit recording of time from open to closed and is repeated to measure time from closed to open.
9. Wiring insulation:
   a) The charging motor is isolated and given

Table IV. Operating Voltage Range

Nominal Control Voltage Rating	Closing Power Devices	Closing Control Devices	Tripping Devices
24V/DC	N/A	N/A	14-28V
48V/DC	36/56V	36/56V	28/56V
125V/DC	90-140V	90-140V	70-140V
250V/DC	200-280V	200-280V	140-280V
120V/AC	104-127V	104-127V	104-127V *
240V/AC	208-254V	208-254V	208-254V *

overpotential test of 900 volts AC to ground.

b) The terminal block connections are given an overpotential test of 1500 volts, AC to ground.

c) The BCT terminals (with secondaries short-circuited) are given an overpotential test of 2500 volts, AC to ground, for one minute.

10. Voltage Withstand: The complete breaker is tested: a) between live parts and cabinet, (b) across open contacts, and (c) between phases. The breaker must withstand the applied 60 Hertz voltage for one minute, in accordance with appropriate "dry withstand" values, per Table I.

11. Power Factor: All bushings are tested:
    a) Individually (with breaker open), and
    b) in phases (with breaker closed): Maximum allowable limit: 3%

12. Reference Dimension: The exact horizon displacement of the closed contact of each interrupter (from a reference location) is measured and recorded on that interrupter. This measurement permits future comparison to establish the extent of contact erosion. (Figure 34).

DESCRIPTION OF OPERATION

The following paragraphs describe the Type R breaker mechanism. The mechanism, of the stored energy type, consists of two parts:

(1) The stored energy, or spring charging mechanism, and (2) the closing and opening mechanism. The basic parts are combined into one sub-assembly. A universal type motor automatically charges the two closing springs. The closing operation serves to charge the opening spring.

The mechanism has a spring release device which can be actuated to close the breaker manually (locally), or can be electrically operated, through a control switch, or other circuit-making device, for remote closing.

The breaker can be opened manually (locally), or can be tripped electrically through a remote control switch. In the absence of control voltage (or whatever desirable), the closing springs can be charged manually, with the manual charging unit.

Referring to Figures 8, 9, 10, 12, the basic elements are mounted on the crankshaft (15), which has four flats machined on it, and the crank arms (17) attached to the ends. Each arm connects to its closing spring (18) by a formed end (38), while the rear of the spring is anchored to the mechanism frame. The crank arms (17), motor cutoff switch cam (25), close cam (5), and drive plates (12) have flats matching the crankshaft ends to anchor them to the shaft. The spring charge indicator (26), ratchet wheel (10), oscillator (14), and manual charge device (16) do not have matching flats but are mounted on separate bushings and are free to rotate on the crankshaft.

Motor-Driven Operation of Charging the Closing Springs

When power is applied to the motor, its roller (41) drives the oscillator (14) counterclockwise, and the oscillator pawl (9) pushes on a tooth in the ratchet wheel (10) to rotate the wheel slightly more than one tooth in the counterclockwise direction. The hold pawl (11) snaps behind the corresponding advanced tooth, holding it against the torque of the closing springs (18), while the oscillator, driven by the oscillator spring (39), rotates back clockwise to catch another tooth on the ratchet. The counterclockwise rotation of the oscillator thus continues until the ratchet wheel pin (40) engages the two drive plates (12), and through them, the oscillator drives the crankshaft until its arms (17) are slightly past horizontal dead center. This rotation of the shaft carries the close cam (5), keyed to it, around the same angular amount, as well as the stop roller (6). Just after horizontal dead center of the crank arms is reached, the torque applied by the closing springs starts to rotate the crankshaft further, independent of the driving motor/oscillator/pawl action. The stop roller on the close cam stops and holds the crank from further rotation just past horizontal dead center by coming to rest against the spring release latch (7). This is the "spring charged" position.

At the instant that the closing springs snap over dead center and are held there, the lobe of the left hand drive plate (12) raises the pawl lifter (35), thus preventing the oscillator pawl (9) from engaging the next tooth in the ratchet wheel (10). The oscillator is then free to move back and forth; at the same time, the motor cutoff switch cam (25) operates the switch (28) through a lever (27) and the motor stops. The cam (25) also operates the spring charge indicator. Since the oscillator is free-running, the exact point at which the motor stops is not critical.

Manual Operation of Charging the Closing Springs

When it is desired to charge the closing springs manually, the manual charge handle (23) must be used to rotate the charging device (16) on the shaft. Six to eight strokes are required. This action carries the manual charge pawl (13), which engages the ratchet wheel (10), imparting to it the same counterclockwise motion which results from operation of the motor, and charging the closing springs (See Figure 13).

Closing the Breaker

As described above, the charged closing springs (18) are prevented from rotating the crankshaft (15) by the restraint of the spring release latch (7) on the stop roller (6) of the close cam (5). Release of the close cam occurs when the front end of the spring release latch is lowered: the close cam is then free to rotate approximately 180° under the force of the closing springs, to apply force to the lower end of the mechanism link (50), and, through it, to the mechanism lever assembly (46). Rotation of the mechanism lever assembly then applies force to the main

drive lever (84), causing the crankshaft drive to close the recloser. The closing operation also compresses the opening springs (85). During rotation, the drive plates move away from the ratchet wheel pin. The ratchet wheel does not rotate during the closing operation, thus preventing excessive wear on the teeth and pawls. Rotation of the crankshaft causes the motor cutoff switch (28) to reclose, and if motor power is available, the motor again operates the oscillator and, through it, the ratchet wheel, and again the closing springs are recharged.

Closing of the breaker can be effected manually, by the application of force on the "PUSH TO CLOSE" bar (62), which depresses the spring release latch through a crank bell link (59), releasing a close cam. Figure 13 illustrates the interlock which prevents a manual "close" effort from being effective when applied to the recloser already in the closed position.

The breaker can also be closed electrically by energizing the coil of the spring release device (8). (IEEE Device No. 52/CC).

Latch Check Switch

The operating point of the latch check switch is adjustable as shown in Figure 18. The switches are operated by a common lever which is actuated by the adjusting screw. The screw adjustment should be set such that the trip latch is firmly engaged by the trip shaft before the switches are operated. This ensures that the closing circuit cannot be energized until the latch is fully reset.

Opening the Breaker

Referring to Figure 2 and Figure 14, the force of the opening springs (85), acting through the main drive lever (84), and the mechanism lever assembly (46), applies a downward force to the mechanism link (50). This downward force on this link pulls on the pivot point between it and the trip latch constraining link (3), tending to move that link (3) in a counterclockwise direction. However, as shown in the enlarged view of the trip shaft latch details (Figure 14), the trip latch (4) cannot move, because of interference with the trip shaft (2). Thus, a slight counterclockwise rotation of the trip shaft will release latch (4), link (3), and link (50), allowing the opening spring to collapse the linkage, and the operating shaft lever (86) to move the breaker to the open position.

Opening the breaker can result from a manual tripping operation in which case a pull of the external trip rod (82), which projects outside of the low voltage cabinet, moves connected linkages which (a) rotates the trip shaft (2), allowing the unit to open, as described above, and (b) open the manual lockout switch (IEEE Device No. 69) to block subsequent attempts to reclose without a manual reset operation. This reset is accomplished by manually returning the lockout switch to its closed position.

The breaker can be opened by energizing the shunt trip coil (1), causing the trip shaft (2) to rotate as described in the preceding paragraph; however, such opening action does not open the manual lockout switch.

Trip Free Operation

Referring to Figure 14 and Figure 18, if the closing springs are charged, and if a fault exists, the associated circuitry will, when the recloser auxiliary switch closes, energize the shunt trip coil (1) (IEEE Device No. 52/TC). This in turn rotates the trip shaft (2) counterclockwise to release the trip latch (4); an attempt to close the breaker manually will not succeed, since there is no restraint on the trip latch constraining link (3), and no force is applied on the mechanism link (50).

OPERATIONAL CHECK PRIOR TO INSTALLATION

The breaker should be test operated for mechanical and electrical operation before delivery to the installation site. Remove the cover of the mechanism compartment so as to observe the mechanical operations.

Operational Check—Manual (See Figure 8 and Figure 2)

If the indicator shows "SPRING DISCHARGED," insert the manual charge handle (23) into the manual charge device (16) and crank the closing springs by pulling forward, six to eight times, on the upper end of the handle. This action rotates the ratchet wheel (10) until the crank arms (17) go over the center, charging the closed springs: the indicator flag then shows "SPRING CHARGED."

If the breaker position flag shows "OPEN," depress the "PUSH TO CLOSE" bar to close the breaker contacts; this action will (a) move the flag to "CLOSED", (b) move the spring indicator to "SPRING DISCHARGED", and (c) compress the opening springs (85).

If the breaker is already closed, the "PUSH TO CLOSE" bar is inoperative, and the unit should be tripped open, by pulling the trip handle projecting from the side of the control cabinet. (This action operates the manual lockout switch.) The recloser can be manually reclosed, as described above, but subsequent electrical operation requires resetting the manual lockout switch, by pushing upward on the reset knob (83) which projects from the bottom of the control cabinet, near the trip handle.

Operational Check—Electrical

Reference to Figure 15 will help to illustrate general features of the circuitry of a typical breaker; this is merely a guide, since all electrical connections to the control circuit should be made only in accordance with the diagrams supplied for the specific breaker.

NOTE:

Consult nameplate for proper voltage. A single-phase, 60 Hertz source is to be connected to the input terminals—"X" and "Y". Close the main power switch.

If the springs are discharged, the motor will immediately run, charging the closing springs, and cutting off the motor through the MCO Switch (28).

CAUTION

PRIOR TO SHIPMENT, SHORTING SCREWS ARE PLACED IN THE TERMINAL BLOCKS TO WHICH THE CURRENT TRANSFORMERS ARE CONNECTED. THESE SHORTING SCREWS SHOULD BE REMOVED ONLY AFTER VERIFICATION THAT THE CURRENT TRANSFORMER TERMINALS ARE CONNECTED TO INSTRUMENTS, METERS TO OTHER CONTROL DEVICES. NEVER DISCONNECT SUCH CONTROL DEVICES WITHOUT FIRST VERIFYING THAT THE SHORTING SCREWS ARE SECURELY IN PLACE. MANY RELAYS ARE PROTECTED BY THE ADDITION OF DEVICES TO PREVENT MOVEMENT OF CONTACTS, LEVERS, ETC., DURING SHIPMENT. SUCH DEVICES SHOULD BE REMOVED PROPER TO OPERATIONAL CHECKS.

INDUCTION DISK RELAYS ARE FREQUENTLY ADJUSTED TO THE "O" POSITION, EFFECTIVELY COMPLETING THE TRIP CIRCUIT TO THE TRIP COIL. FOR CHECKING OPERATION OF SUCH RELAYS, FIRST VERIFY AND, IF NECESSARY, ADJUST THE TIME DIAL ACCORDINGLY. FAILURE TO DO THIS, ON UNITS SUPPLIED WITH CAPACITOR TRIP, PRIOR TO ENERGIZING THE TRIP CIRCUIT WILL DAMAGE THE CAPACITOR TRIP DEVICE.

Electrical Close

Observe indication lamps; if green lamp is on, breaker is open. Move handle of "101" switch (IEEE Device "CS") to "close," energizing the coil of 52X relay through 52Y-NC, 52/LC-1-NO (held closed by trip latch [4]), 52b, CS-C, and CS-SC. The 52X relay picks up, closing in two 52X-NO contacts, energizing spring release device (8), and the breaker closes. The 52Y relay picks up, through 52a and 52X-NO, seals itself in through its 52Y-NO contacts, CS-C and CS-SC; 52X drops out as 52Y-NC opens. Release of the CS handle allows 52Y also to drop out.

Anti-Pump Feature

As described earlier under "Trip Free Operation," the 52Y relay is held closed until 101/C is opened by release of the CS handle. Thus, if the breaker should be closed into a fault, an immediate trip follows, and there is no subsequent reclosing or "pumping".

Electrical Trip

Observe indicator lamps; if red lamps is on, breaker is closed. Move handle of "101" switch (IEEE Device "CS") to "open" applying full trip voltage to shunt trip coil (IEEE Device 52/TC). The breaker opens, and 52/TC drops out.

If the breaker is tripped manually, this action opens the lockout switch (IEEE Device No. 69), and the breaker cannot be closed electrically until this switch is reset manually.

Operational Check—Relays and Instruments

In addition to manual operation (without power) and electrical operation (using control switch—101, or IEEE Device "CS"), an operational check of relay functions should be performed. The steps involved in this check depend on the number of overcurrent (CO) relays present, their type, as well as the type and mode of operation (setting) of the reclosing relay being used.

Overcurrent Relays

The operation of each of these relays can be checks (a) electrically: by passing current from a high-current source—such as a "Multi amp"—through each phase pair of bushing terminals, simulating fault current, or (b) mechanically: by manually rotating the induction disc, or manually closing the contacts of the instantaneous element (if such is present). Either method provides a trip signal.

Reclosing Relay

Choose a mode of operation—set the reclosing times, trips to lockout per the instructions of the reclose relay supplied. Second and third reclose times must be 6 seconds or longer. This time is required to charge the closing springs. A setting below this time will cause close coil failure.

Procedure

1. Move control switch ("CS") to "close" position; breaker should close and red light come on.
2. Move control switch ("CS") to "open" position; breaker should open and green light should come on; release "CS" to neutral position.
3. The reclosing relay should not reclose in the sequence for which it is programmed. The breaker should remain open until the control switch (CS") is moved to the "close" position.
4. Operate each phase CO relay, as described under "Overcurrent relays," above. The breaker should trip and reclose in accordance with its reclosing control program.
5. If a "non-reclosing" switch is available, switch to the non-automatic position, and again trip the breaker with the CO relay. The unit should trip and lock out.
6. If ground (neutral) CO relay is present, move bypass switch—"GCO"—by "cutout" position, and check ground CO relay, per 4 above. The breaker should not trip unless the witch is returned to "normal" position.
7. The steps outlined above, when performed in accordance with recommendations relating to each breaker, will serve as an operational check for both reclosing relay as well as overcurrent relays.

PERMANENT INSTALLATION

Location and Mounting

The Vacuum Breaker should be located so that it is readily accessible for manual operation and inspection. All overhead construction work should be completed before the unit is installed. Care should be exercised when transporting the unit so that the lifting devices do not come in contact with the bushings.

The Breaker is adjustable in height to meet various electrical codes and flexibility of installation. The foundation should be reasonably level and may be shimmed if necessary. Four 5/8 inch (16 mm) diameter bolts are recommended for mounting to the foundation. Refer to the outline drawing for location of mounting bolts.

Connections

After the Vacuum Breaker has been secured on the foundation, the electrical connections may be made. Precautions must be taken to insure that all wires to be connected to the unit are not energized.

Primary Wiring

The breaker may be connected in series with the line, facing either direction, as there is no distinction between line and load terminals. However, the location and function of the internally mounted current transformers may dictate line connection. Thus, the designation of "line" and "load" side must be made with knowledge of control circuit involved. Power to operate the breaker mechanism, when tapped from the conductors being protected, must be taken from the line side for proper reclosing.

CAUTION

IF AC CONTROL POWER IS TAKEN FROM THE LINE, THE BREAKER PROTECTING IT COULD, UNDER SYSTEM FAULT CONDITIONS, DROP BELOW THESE MINIMUM VALUES. IF THIS OCCURS, THE BREAKER WILL NOT TRIP. THIS THEN WOULD REQUIRE THE FAULT TO BE CLEARED BY AN UPLINE DEVICE.

CAUTION

PRECAUTIONS MUST BE TAKEN TO INSURE THAT ALL WIRES TO BE CONNECTED TO THE UNIT ARE NOT ENERGIZED.

Installation should be designed with overhead leads if possible. Adequate electrical clearance must be provided between these leads and parts of the station such as walls and metal parts. Leads should be supported in such a manner that the breaker bushings are not subjected to excessive strains. The bushings should not carry the strain of the cables or bus bars. The leads must have capacity at least equal to the maximum (emergency) operating current of the circuit. Connections are made to bolted terminals on the bushings and must be securely tightened to assure good contact. All joints should be clean and bright.

Control and Secondary Wiring

CAUTION

CONSULT NAMEPLATE, SCHEMATIC, OR CONNECTION DIAGRAMS FOR PROPER VOLTAGE SOURCE.

All electrical connections to the control circuit should be made in accordance with the diagrams supplied for the specific breaker.

The heater and the spring charging motor require a single-phase, 60 Hertz voltage source (as indicated on nameplate and pertinent diagrams), obtained from a secondary circuit on the source side of the breaker, or from an independent source. It should be capable of supplying 12 amperes with a maximum voltage drop of 20%, for units having AC close and trip functions. For units having DC close and trip functions, the voltage of the source, under load, must be within the limits outlined in Table IV, "Operating Voltage Range."

Conduit should be used for control circuits as much as practicable. Control wires should be run separately and remotely from high voltage wiring to prevent possible inductive coupling between them. Control wires should be adequate to handle full operating current to avoid dropping voltage below that specified on the nameplate. All conduits should be sealed off at their entrance to the equipment enclosure.

Control wiring and bushing current transformer connections are made inside the low voltage compartment where the necessary terminal boards are provided for convenient installation.

Connection diagrams are supplied for each breaker showing the proper connections for control.

Grounding

The breaker cabinet and mounting frame should be well grounded, using conductor at least 4/0 AWG (.460 in.: 11.7 mm).

FINAL INSPECTION

When the breaker has been installed and all mechanical and electrical connections completed, EXCEPT ENERGIZING THE POWER LINE, the following points of inspection are recommended.

Mechanical and Electrical Inspection

1. See that the unit is properly bolted in place and essentially level on its foundation.
2. Make a check for the tightness of hardware on stationary and moving contacts, shunts, pull rod, trip rods, etc.
3. See that the operating mechanisms are free of packing or foreign material, and operate freely. Lubrication is

generally not required and should be applied sparingly, if necessary.

4. Terminal connections should be securely tightened.

5. Check control cable entrance fittings for tightness.

6. Examine control wiring insulation for evidence of chafing or abrasion. If desired, a dielectric test can be made, duplicating details of production tests, as described earlier in this book. Check connections, according to schematic or connection diagrams.

7. See that all covers and bolted connectors are securely in place.

8. Make a continuity check, preferably one which involves measuring resistance in the microhm magnitude, to determine tightness of bolted joints. (Refer to section covering "Production Tests" for typical resistance values.) Also, make an overvoltage test on each interrupter to verify there has been no loss of vacuum. Perform this test by opening the breaker, and applying a 35 kV, 60 Hertz voltage to each interrupter for at least one minute. Experience has indicated that, if the interrupter has lost vacuum, the open contacts quickly flashover, in a positive manner, well before the adjustable hi-pot tester can reach 35 kV.

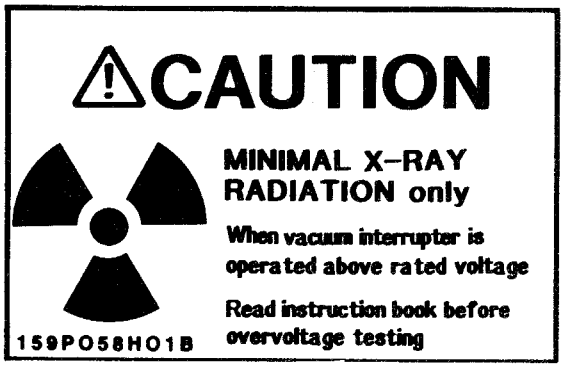

High voltage applied across an open gap in a vacuum can produce X-radiation. No X-radiation is emitted when this breaker is closed since no gap exists. Also when the breaker is open to the specified contact spacing in service or tested within the voltages as specified, X-radiation at one meter is below the level of concern. A danger could exist during testing at voltages above or contact spacing below that specified on the nameplate. To insure safety the following precautions should be taken when performing insulation withstand (hipot) test:

9. Before applying test voltage, remove the rear cover of the high voltage compartment and check contact spacing. If the contact spacing is less than that shown on the nameplate, check operating linkages and adjust to nameplate value before testing.

10. Front and rear covers of the high voltage compartment should be in place during testing and test personnel should be at least one meter away from the phase being tested.

11. THE TEST VOLTAGE ACROSS THE OPEN VACUUM GAP SHOULD BE LIMITED TO 37.5 kV.

INSPECTION, MAINTENANCE, AND ADJUSTMENT

Periodic Inspection

The safety and successful functioning of apparatus or systems connected to the breaker depends to a large extent on proper and reliable operation of this unit. To this end, the breaker must have systematic inspection at regular time intervals. Operating experience, based on the number of operations, magnitude of current, and any unusual operations which occasionally occur, will soon establish a maintenance schedule which will give assurance of proper breaker reliability.

The Vacuum Breaker may be inspected without opening the high voltage circuit as long as the high voltage compartment is not opened and reasonable care is practiced. This high voltage circuit is not admitted to the control compartment; therefore only control voltage is present where the inspection is made.

The Vacuum Breaker may be tripped by either the manual electrical or manual mechanical means during maintenance and inspection with the high voltage circuit in operation. Closing the breaker may be accomplished in either of the two methods described earlier.

In the open position, the crankshaft should be resting firmly against the white teflon stop. The main drive rod is adjustable although no adjustment should be required after the initial factory setting.

CAUTION

IF THE FRONT PLATE IS TO BE REMOVED FOR MECHANISM SERVICE, ALL SPRINGS SHOULD BE FIRST DISCHARGED, LEAVING THE MECHANISM IN THE "OPEN" POSITION. THE INDICATING FLAG WILL SHOW WHETHER OR NOT THE MAIN SPRINGS ARE CHARGED.

Contact Erosion, Contact Travel, and Overtravel: Measurement and Adjustment

As a vacuum interrupter continues to perform its normal function, some material of the contacts is gradually eroded away, and the moving stem is driven deeper and deeper into the interrupter by the operating mechanism. The overtravel spring causes the linkage to follow the moving contact, ensuring adequate contact pressure in the closed position, and accommodate to the phase-to-phase variations in the individual interrupters. At the time of manufacture the distance between the front of the contact block (103, Fig. 16) and the support bracket (92, Fig. 16) when interrupter is in the closed position (K dimension,

Figure 16) is measured and recorded on the interrupter nameplate (Figure 17). As the contact is eroded away this K dimension decreases by an amount equal to the amount of erosion. When this difference equal 0.125 inches, the life of the contact has been reached and the interrupter should be replaced.

During assembly, a scribed line is made on moving stem end of each interrupter 0.125 inches from the support bracket. As the contacts erode, this dimension decreases. When the scribed line reaches the support bracket, the interrupter should be replaced.

Contact erosion also reduces the compression of the overtravel springs, which in turn increases the contact travel. To insure proper operation, the following inspection and adjustment procedures should be followed during breaker maintenance.

1. Determination of Contact Erosion:

   As contact erosion takes place, the K dimension (fig. 16 when bottle contacts are closed) will decreases from the K dimension measured when new and recorded on interrupter nameplate (Fig. 17). When this difference equals 0.125 inches, the life of the contact has been reached and the interrupter should be replaced.

2. Determination of Contact Travel:

   a) With the breaker in the closed position, measure the K dimension (Fig. 16).

   b) With the breaker in the open position, again measure the K dimension (Fig. 16).

   c) The difference between this measurement and the one taken in the closed position is the contact travel.

   d) If it is outside the permissible travel limits on the nameplate (Fig 17), proceed to overtravel and then follow the adjustment procedure.

3. Determination of Overtravel:

   a) With the breaker in the closed position, measure the overtravel dimension B, Figure 16.

   b) The permissible overtravel limits are 0.125 to 0.260 inches. If the measurements obtained are outside these limits, follow the adjustment procedure.

4. Contact Travel and Overtravel Adjustment Procedure:

CAUTION:

CONTACT TRAVEL AND OVERTRAVEL ADJUSTMENTS SHOULD ONLY BE MADE ON INTERRUPTERS WHICH HAVE NOT REACHED THEIR CONTACT EROSION LIMIT.

   a) With the breaker closed, loosen jam nut (105, Fig. 16).

   b) With the breaker open. Remove "X" washer from hinge pin (106, Fig. 16). To remove hinge pin, pull out on the contact block (103, Fig. 16) until pin (106) can be removed. Remove pin and let interrupter contacts close.

   c) Turn interrupter stem adjusting bolt (104, Fig. 16) clockwise to increase contact travel and counter clockwise to reduce contact travel.

   One full turn on the interrupter stem adjusting bolt (104) will increases or decrease the contact travel by .062 inches. An increase in the contact travel will result in .70 per unit reduction in the overtravel and vice versa.

   d) Replace hinge pin (106, Fig. 16) by pulling out on the contact block until pin can be inserted through the openings. Replace "X" washer.

   e) Close the breaker and tighten jam nut (105, Fig. 16). Check contact travel and overtravel. Additional adjustments may be made as required.

NOTICE:

Jam nut (105, Fig. 16) should be tightened and loosened only with the breaker in the closed position. A twist of the moving contact stem more than 2° of rotation may damage the bellows.

5. Replacement of Interrupters:

   a) Manually trip breaker to the open position.

   b) Loosen contact block nut (108, Fig. 16). **Do not loosen all the way.** The contact block should remain tight on the interrupter stem so the contact block can be pulled out with the stem in order to remove the hinge pin (106, Fig. 16). **Avoid any twisting action on the interrupter stem.**

   c) Remove the "X" washer from the end of the hinge pin (106). To remove hinge pin, pull out on the contact block (103) with the interrupter stem until pin (106) can be removed. Remove pin and let interrupter contacts close.

   d) Now loosen contact block nut (108) until free and the contact block (103) is free on the interrupter stem.

   e) Remove fixed end bracket (94, Fig. 2) from bushing (95, Fig. 2) and from the stand off insulator.

   f) Remove the interrupter's two support nuts (109, Fig. 16) from the interrupter supports.

   g) Remove the interrupter out the back. The contact block should slide off the interrupter stem.

   h) Unscrew the interrupter adjusting bolt (106, Fig. 16) from the old interrupter. Note the original bolt location in the stem. Now screw bolt into the new interrupter stem to the approximate location as on

the original interrupter. Keep jam nut (105, Fig. 16) loose on the adjusting bolt until final adjustments are made.

(Replace the new interrupter in reverse order)

i) Insert new interrupter from the back. Slide the contact block over the stem. Insert the new interrupter's support bolts through holes in the support bracket (92, Fig. 16).

j) Install nuts (109, Fig. 16) on the two interrupter support bolts and tighten.

k) Install the fixed end bracket (94, Fig. 2) to bushing (95, Fig. 2), the new interrupter's fixed stem and the stand off insulator.

l) Adjust contact block (103, Fig. 16) on the new interrupter's stem, such that the front edge on the contact block is flush with the end of the interrupter stem. Tighten contact block's nut (108, Fig. 16) by firmly holding the contact block's bolt (107, Fig. 16). **Avoid any twisting action on the interrupter's stem.**

Tighten the contact block just enough to be able to pull out on the contact block with the interrupter's stem.

NOTICE:

Do not twist the moving end of the interrupter. More than 2° rotation may damage the bellows.

m) Adjust stem adjusting bolt (104, Fig. 16) such that the hinge pin hole on the stem adjusting bolt is just at the edge of the hinge pin hole in the operating lever (89, Fig. 16).

n) Pull out on the contact block (103, Fig. 16) which is tight enough on the interrupter stem to be able to pull open the interrupter's contacts. Pull out until the hinge pin (105, Fig. 16) can be inserted. Insert hinge pin and lock with "X" washer.

o) Now, CLOSE BREAKER and tighten the contact block nut (108, Fig. 16) to 85 ft. lbs. Make sure to hold bolt (107, Fig. 16) firmly to avoid any twisting action on the interrupter stem.

p) Tighten jam nut (105, Fig. 16) flush with the end of the interrupter stem.

NOTICE:

Do not twist the moving end of the interrupter. More than 2° of rotation may damage the bellows.

q) Operate the breaker 30 to 40 times and check contact travel as described earlier in this section.

r) Adjust as required following contact travel and overtravel adjustment procedure.

NOTICE:

Contact travel for new interrupter should be 0.312 to 0.437 inches with an overtravel of 0.168 to 0.260. If these limits cannot be obtained. Check mechanism and operating linkage for correct operation.

6. Trip Latch and Trip Coil Adjusting Procedure (Refer to Figure 18)

   a) With mechanism open and closing springs charged, apply downward force on back of trip latch at point "F". Slowly rotate trip shaft adjusting screw clockwise until the trip shaft releases. (This is "no overlap" position.) To obtain recommended trip latch wipe, rotate adjusting screw 8 1/2 turns in a counterclockwise direction.

   b) Trip coil lever should be adjusted to clear the trip lever .25 (6.3 mm) with a 0.1 (.25 mm) minimum overlap by adjusting the trip coil mounting position.

   c) Set latch check switch adjustment screw to trip switch after the trip latch is latched.

Lubrication

ABB recommends the use of Moly 33 for any lubrication required on the mechanism. See Figures 19, 20 & 21 of this publication for required lubrication points. Environmental conditions will have effect on frequency of required lubrication and the recommendation listed below may require modifications for unusual and severe conditions. As a guide, ABB would recommend that the mechanism be inspected after one year of service or 500 operations. The primary concern will not be aging or degradation of the lubricants, but for contamination that may be present. Required inspection times can then be better assessed after the first year's inspection and customer then may make decision of frequency and subsequent maintenance that must be performed.

RENEWAL PARTS

A list of renewal parts recommended to be maintained in stock will be furnished on request. When ordering renewal parts, specify the name of the part, identify the breaker including the type, amperes, volts, and general order (G.O.) number as indicated on the nameplate.

Standard hardware items, such as bolts, nuts and washers should be purchased locally. For replacement part prices, contact the nearest Sales Office of ABB.

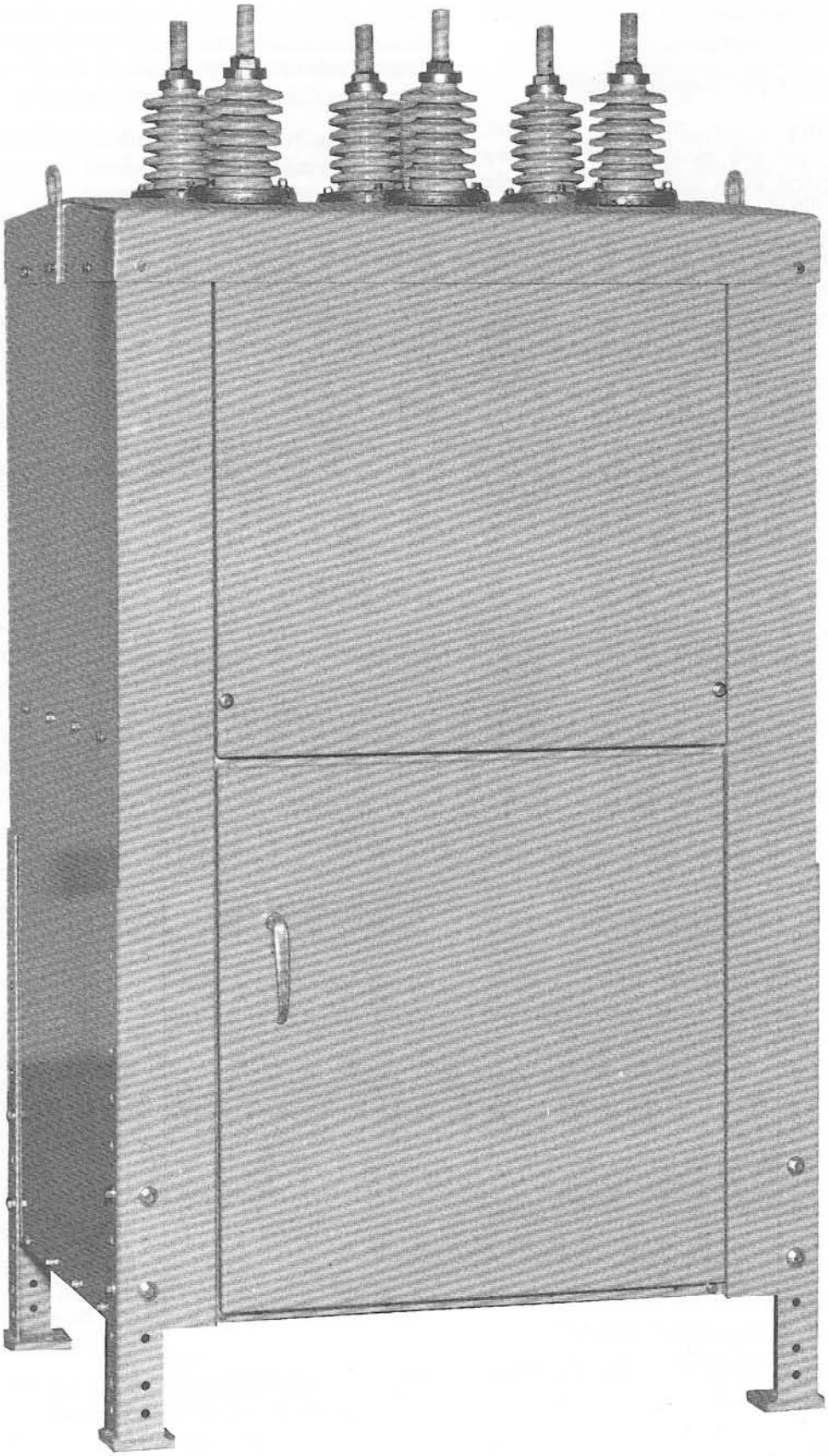

Figure 1. Type R Vacuum Circuit Breaker

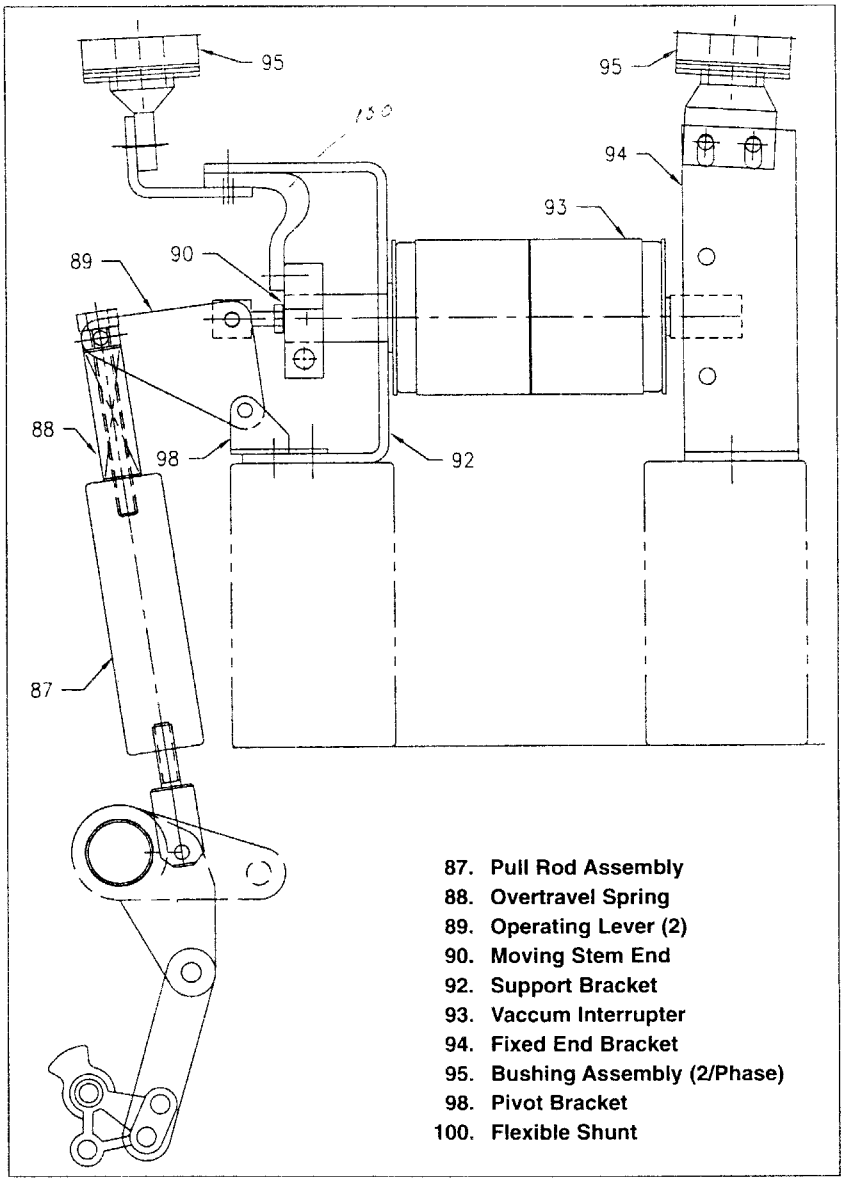

Figure 2. Mechanical Arrangement

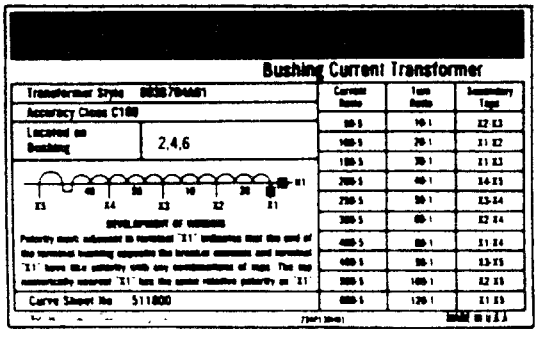

Figure 3. Typical Bushing Current Transformer Nameplate

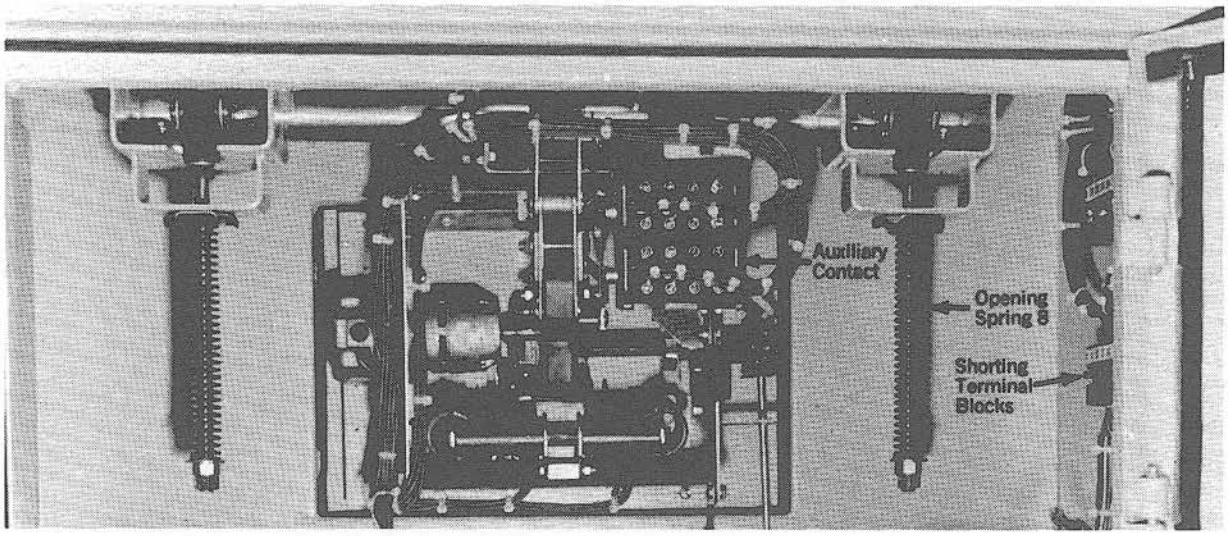

Figure 4. Mechanism and Compartment Detail, Rear View

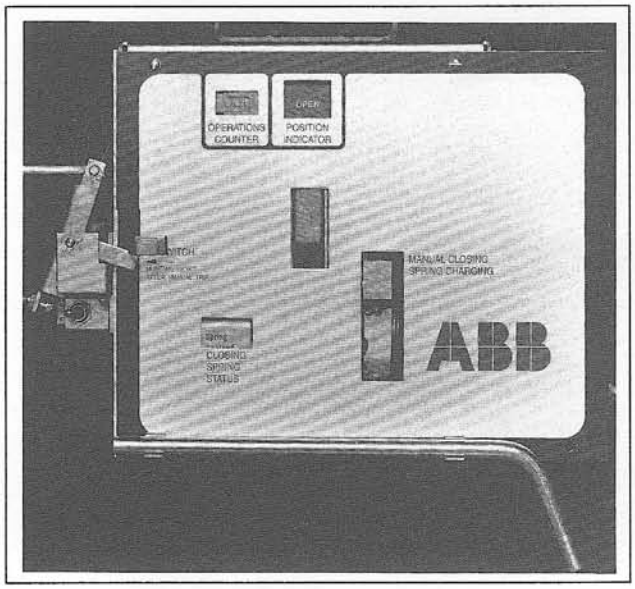

Figure 5a. Mechanism Front View

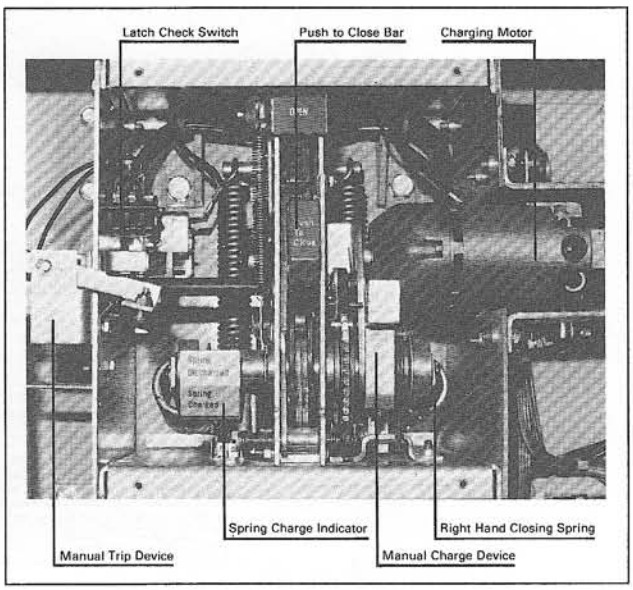

Figure 5b. Mechanism Details, Cover Removed, Front View

Type **Vacuum Circuit Breaker**

Serial No.	S.O.	Date of Mfr.	Rated Frequency 60 Hz.
Rated Continuous Amps.	Rated Max. KV.	KV. Range Factor K 1.00	Instruction Book
Rated Short-Ckt. Amps. (SYM.)	FW Impulse Withstand KV.	Rated Inter. Time Cycles	Parts List
Closing Control Voltage Range to		Weight Lbs	Diagram No.
Tripping Control Voltage Range to			

Figure 6. Breaker Nameplate

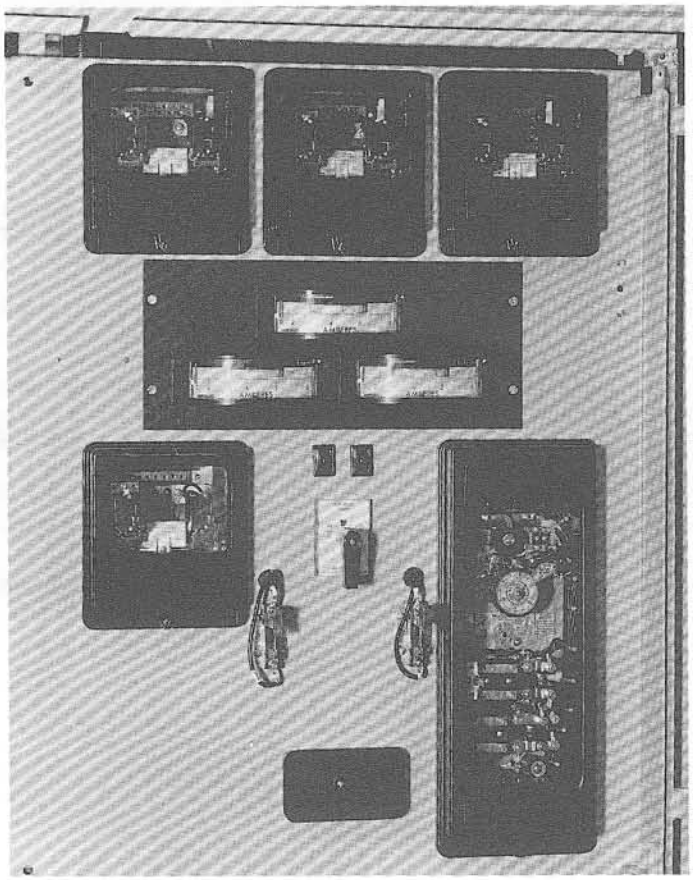

Figure 7. Typical Control Panel

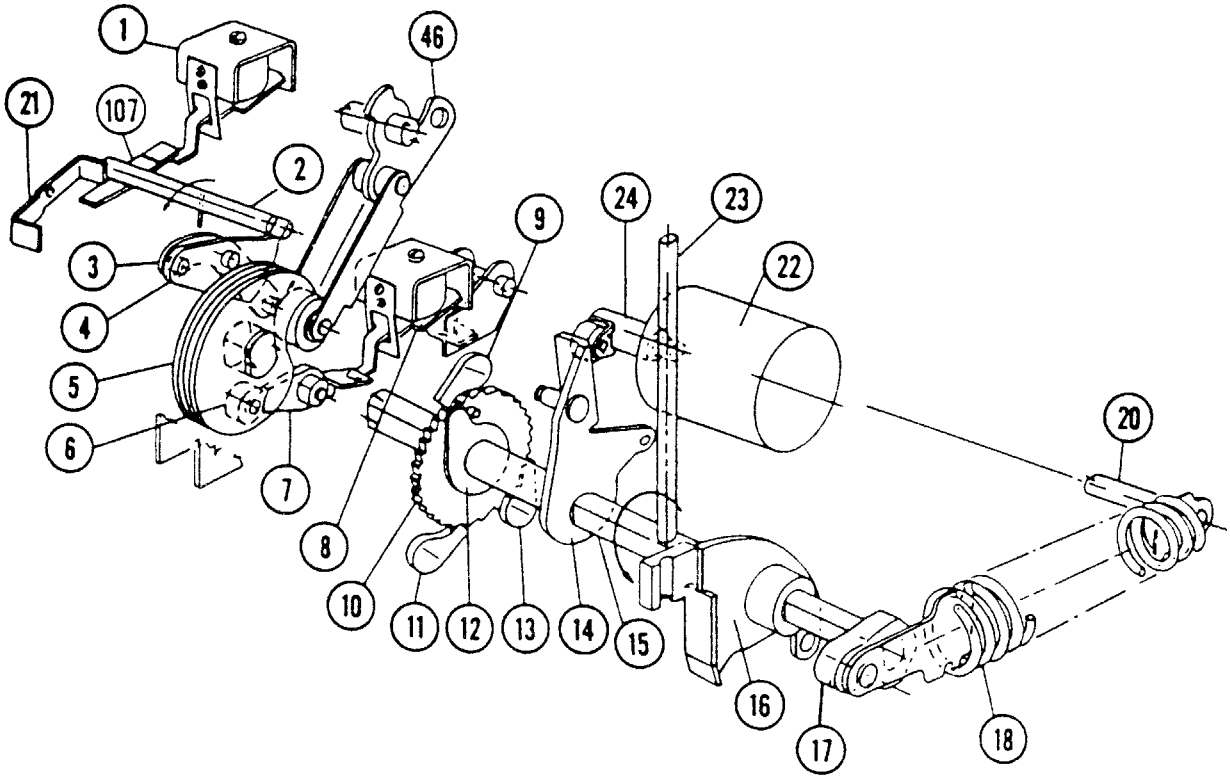

1. Shunt Trip Coil *(IEEE Device 52/TC)*
2. Trip Shaft
3. Trip Latch Constraining Link
4. Trip Latch
5. Close Cam
6. Stop Roller
7. Spring Release Latch
8. Spring Release Device *(IEEE Device 52/CC)*
9. Oscillator Pawl
10. Ratchet Wheel
11. Hold Pawl
12. Drive Plate
13. Manual Charge Pawl
14. Oscillator
15. Crankshaft
16. Manual Charge Device
17. Crankarm (2)
18. Closing Spring (2)
20. Closing Spring Anchor
21. Manual Trip Lever
22. Motor (52/M)
23. Manual Charge Handle
24. Motor Crank Arm
46. Mechanism Lever Assembly
107. Trip Lever

Figure 8. General Arrangement of Principal Parts of Mechanism

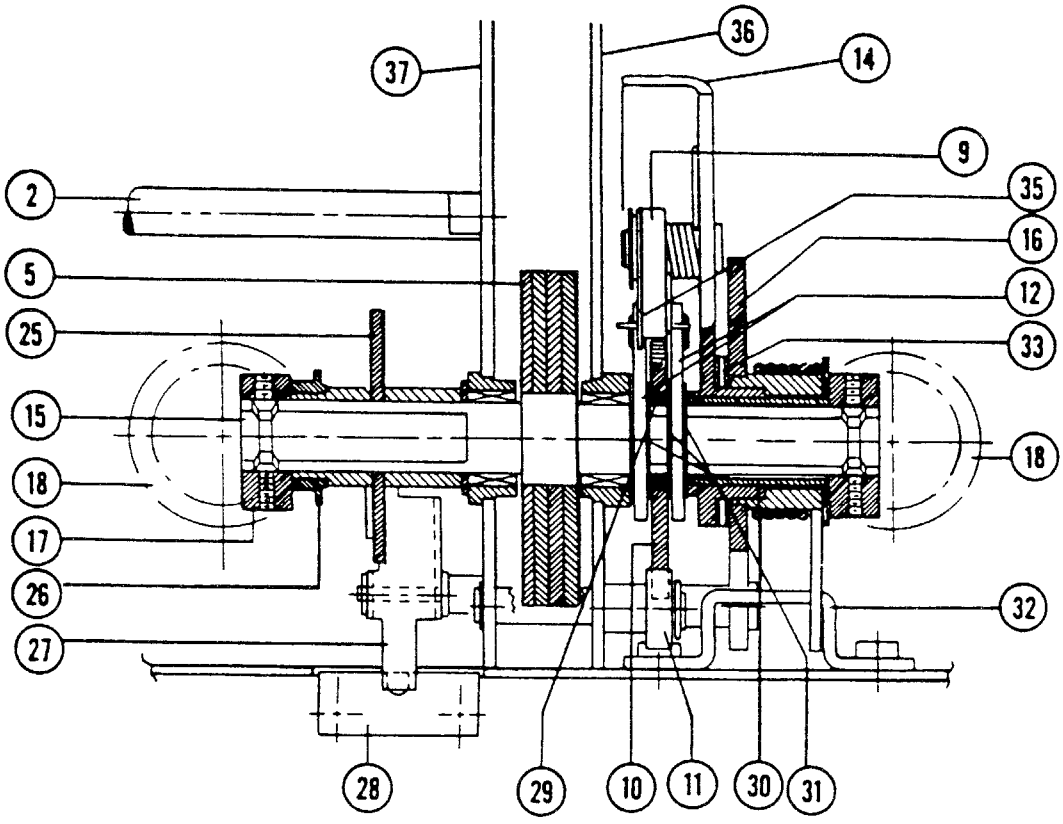

2. Trip Shaft
5. Close Cam
9. Oscillator Pawl
10. Ratchet Wheel
11. Hold Pawl
12. Drive Plate
14. Oscillator
15. Crankshaft
16. Manual Charge Device
17. Crankarm (2)
18. Closing Spring (2)
25. Motor Cut-off Switch Cam
26. Spring Charge Indicator
27. Motor Cut-off Switch Lever
28. Motor Cut-off Switch (MCO)
29. Ratchet Bushing
30. Oscillator Bushing
31. Spacer (3)
32. Stop Bracket
33. Thrust Bearing and Races
35. Pawl Lifter
36. Mechanism Side Frame, Right Hand
37. Mechanism Side Frame, Left Hand

Figure 9. Front View of Principal Parts of Crankshaft Assembly

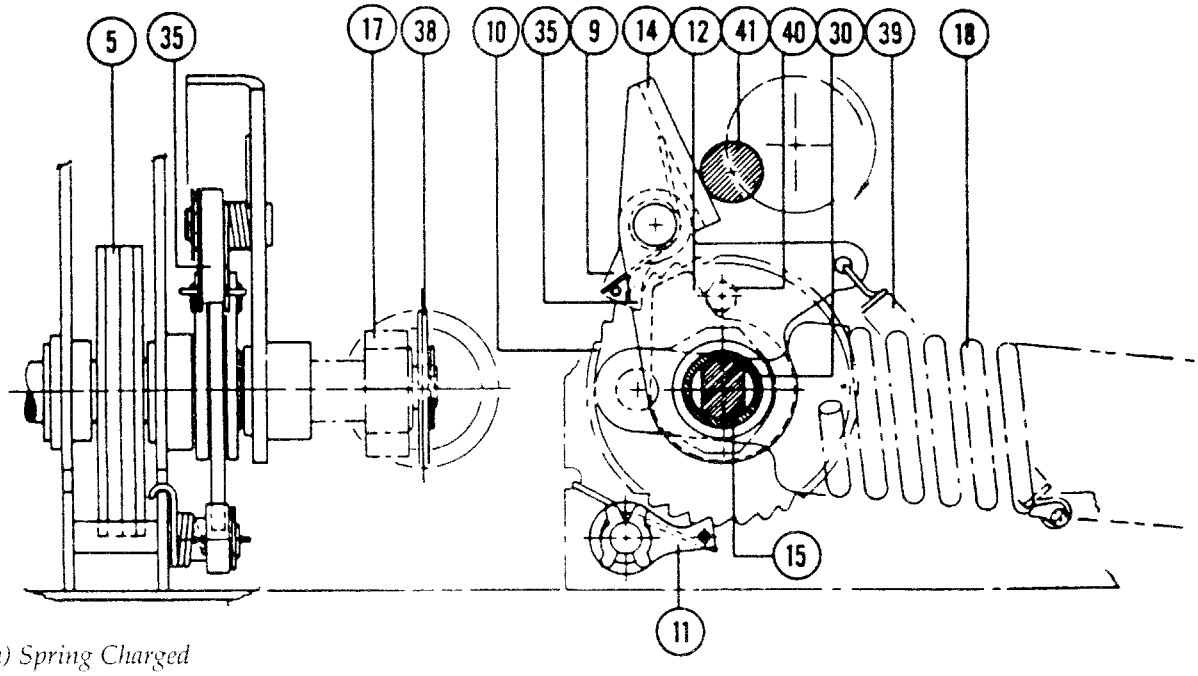

a) Spring Charged

Note: Main cam position for this crank shaft position is shown in Fig. 23a

5. Close Cam
9. Oscillator Pawl
10. Ratchet Wheel
11. Hold Pawl
12. Drive Plate
14. Oscillator
15. Crank Shaft
17. Crank Arm
18. Closing Spring (2)
30. Oscillator Bushing
35. Pawl Lifter
39. Oscillator Spring
40. Ratchet Wheel Pin
41. Motor Crank Roller

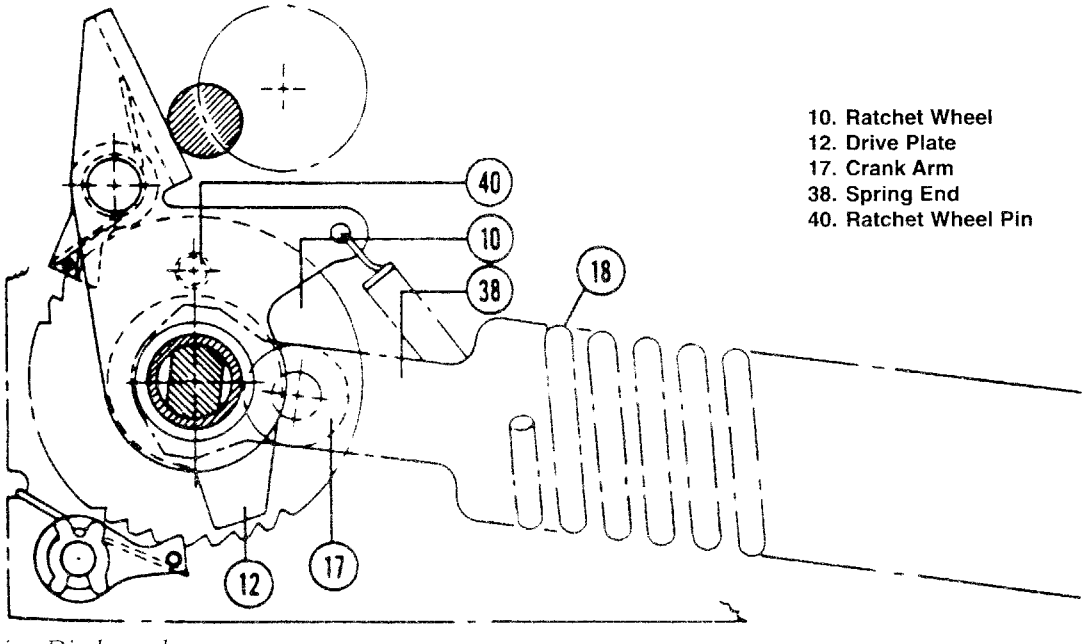

10. Ratchet Wheel
12. Drive Plate
17. Crank Arm
38. Spring End
40. Ratchet Wheel Pin

b) Spring Discharged

Figure 10. Details of Closing Springs

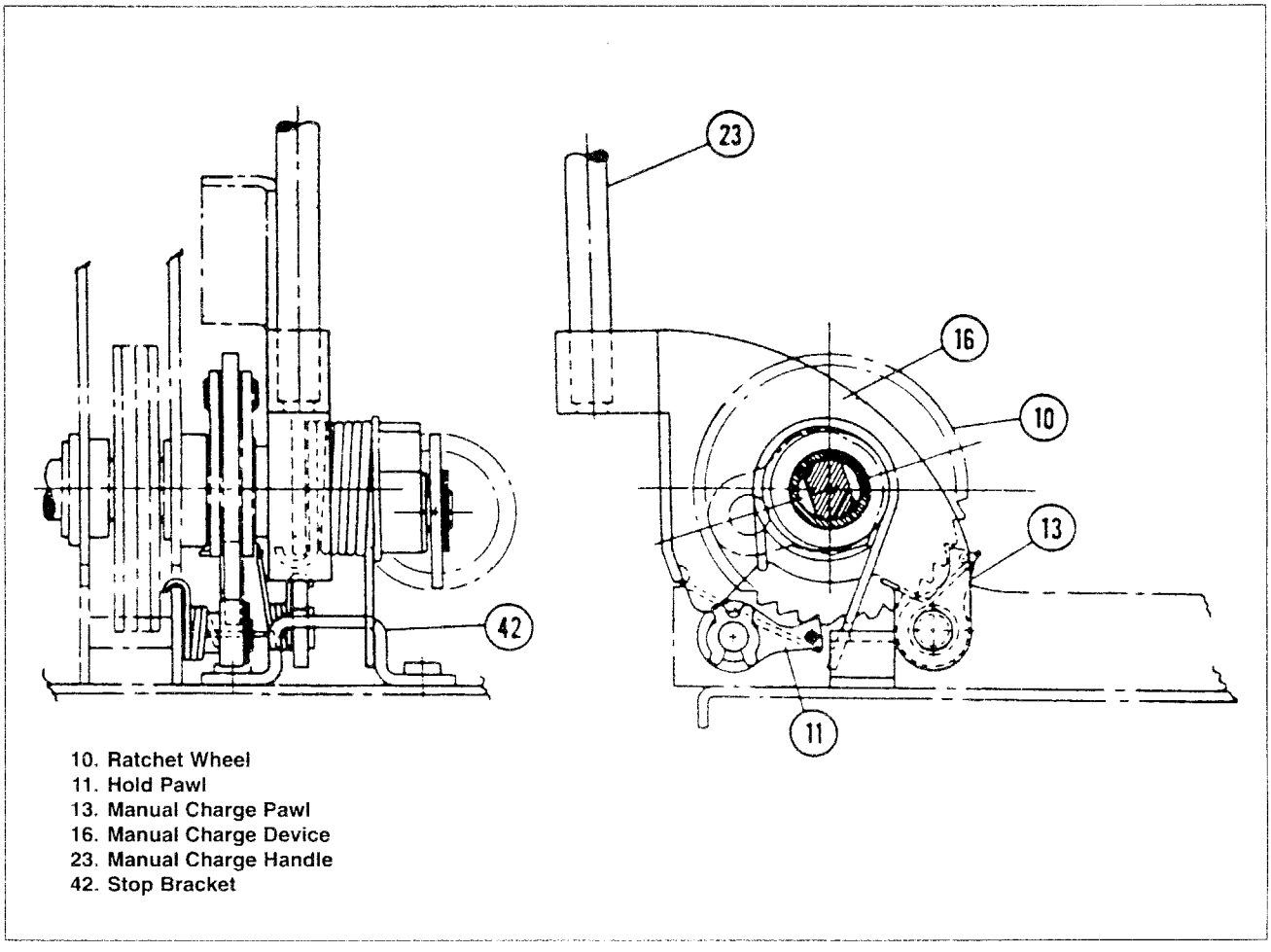

Figure 11. Details of Manual Charge Device

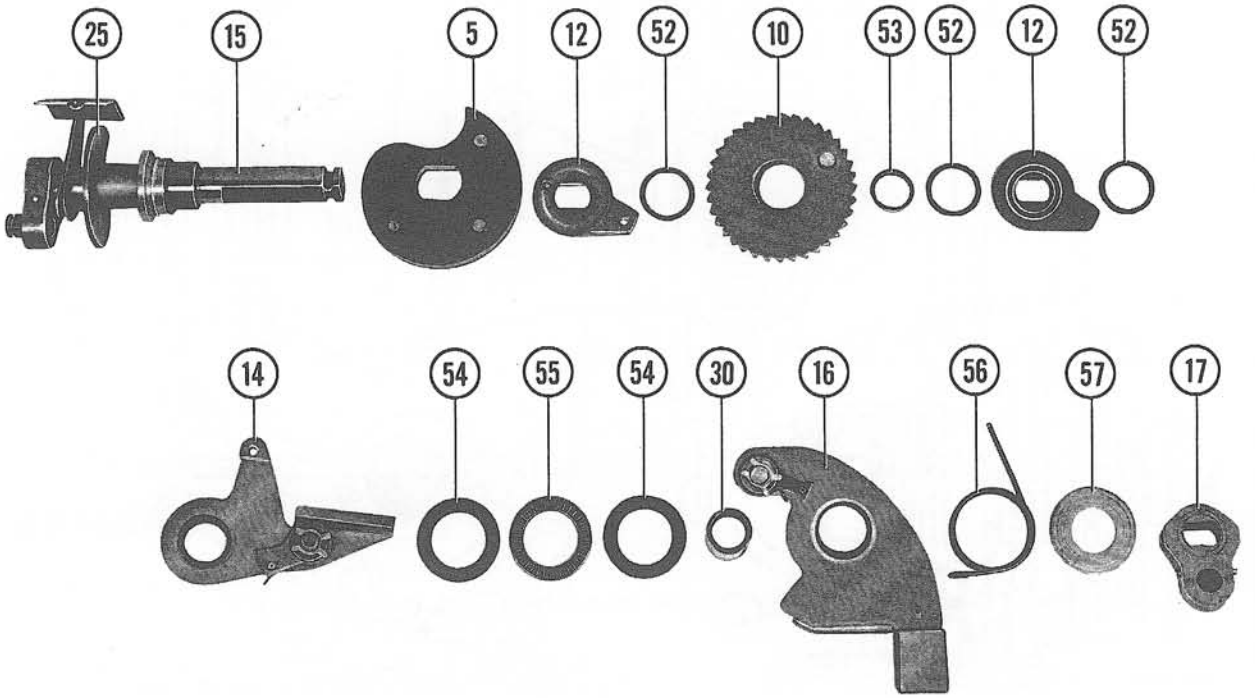

5. Close Cam
10. Ratchet Wheel
12. Drive Plate
14. Oscillator
15. Crankshaft
16. Manual Charge Device
17. Crankarm (2)
25. Motor Cut-off Switch Cam
30. Oscillator Bushing
52. Precision Spacer (3)
53. Ratchet Bushing
54. Bearing Race (2)
55. Thrust Bearing
56. Charge Device Return Spring
57. Spring Retainer

Figure 12. Details of Crankshaft Assembly

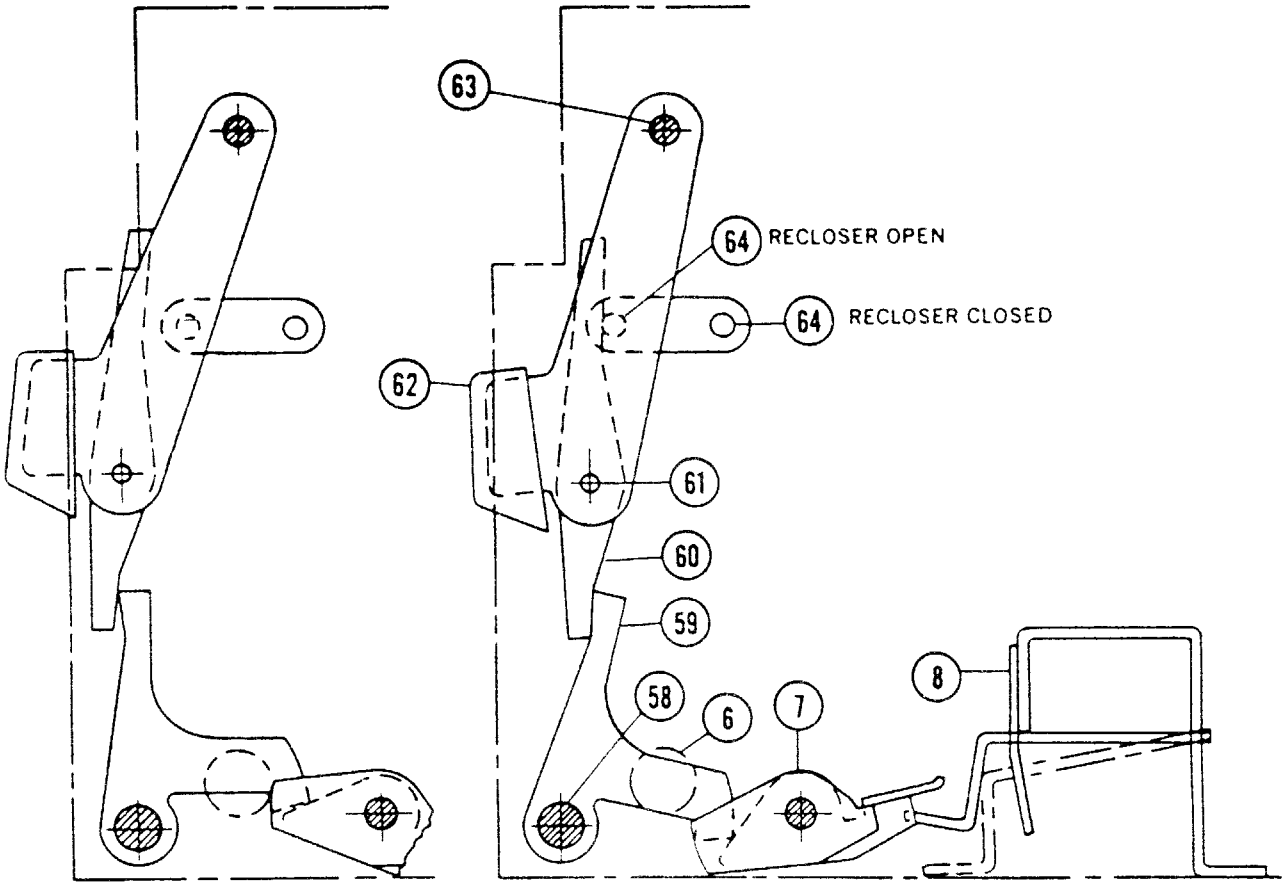

a) Close Bar (Normal Position)

b) Close Bar (Released Position)

6. Stop Roller
7. Spring Release Latch
8. Spring Release Device *(IEEE Device 52/CC)*
58. Bell Crank Pivot Pin
59. Bell Crank Link
60. Spring Release Latch Link
61. Spring Release Latch Link Pin
62. "Push to Close" Bar
63. Close Bar Pivot Pi
64. "Open-Close" Indicator Pin

Figure 13. Details of Close Interlock

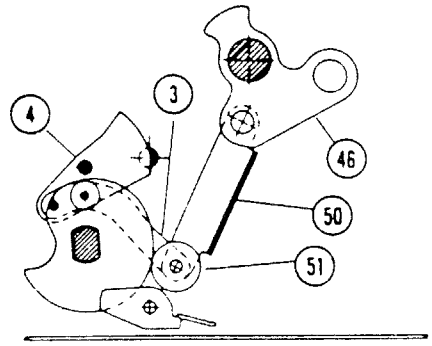

a) Mechanism Open—Springs Discharged (Trip Latch Not Reset)

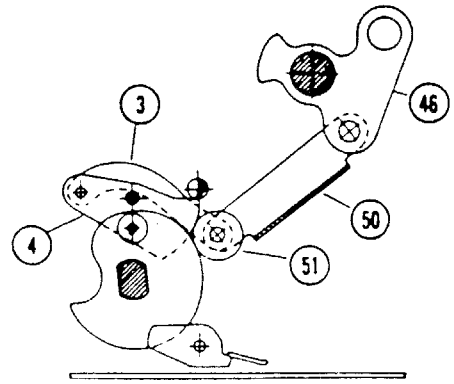

b) Mechanism Closed—Springs Discharged

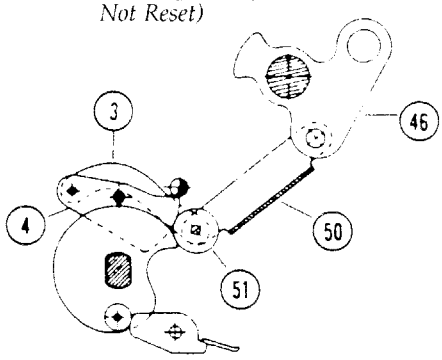

c) Mechanism Closed—Springs Charged

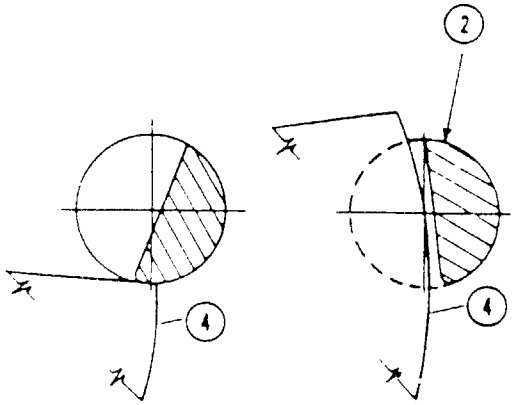

aa) Trip Latch Held *bb) Trip Latch Released*

d) Trip Shaft Latch Details

2. Trip Shaft
3. Trip Latch Constraining Link
4. Trip Latch
46. Mechanism Lever Assembly
50. Mechanism Link
51. Main Roller

Figure 14. Details of Linkages of Mechanism and Closing Spring Charge Condition

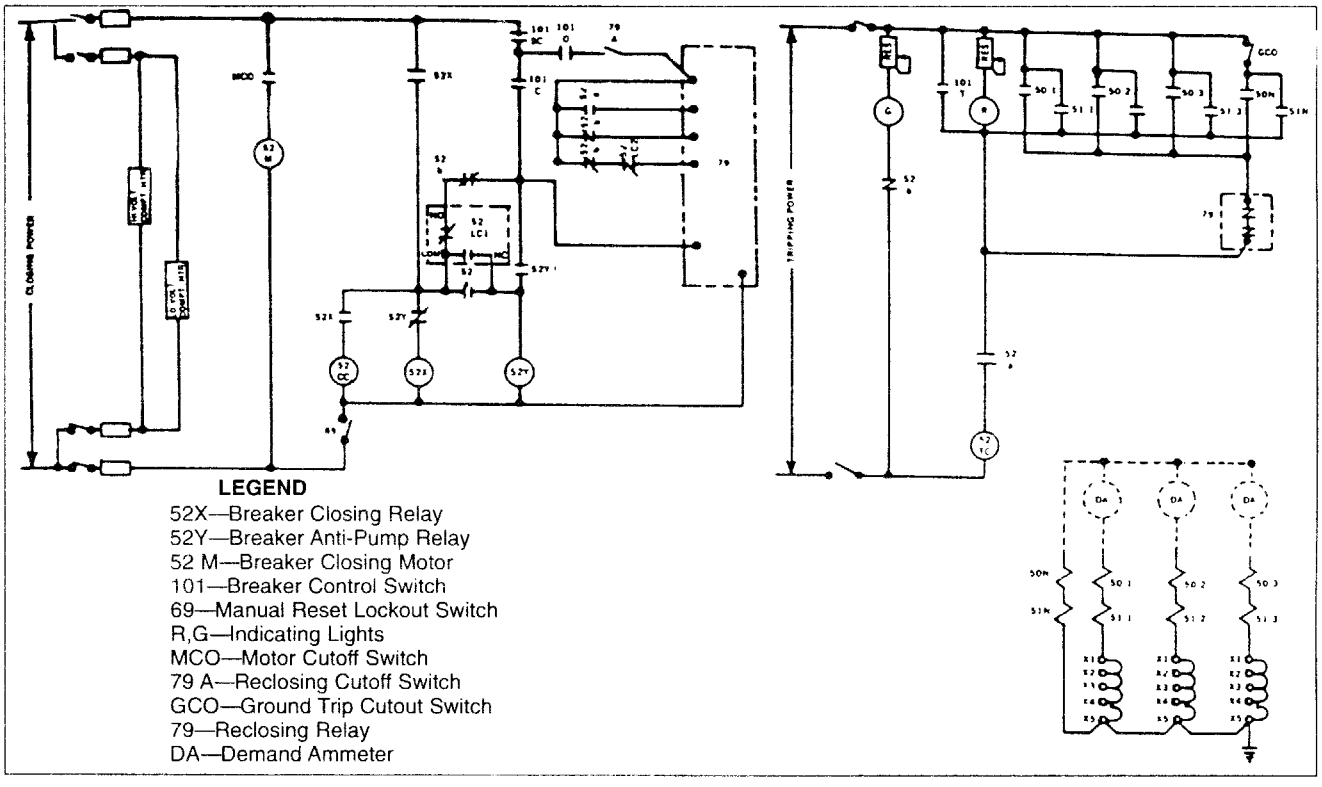

Figure 15. Typical Breaker Schematic Diagram

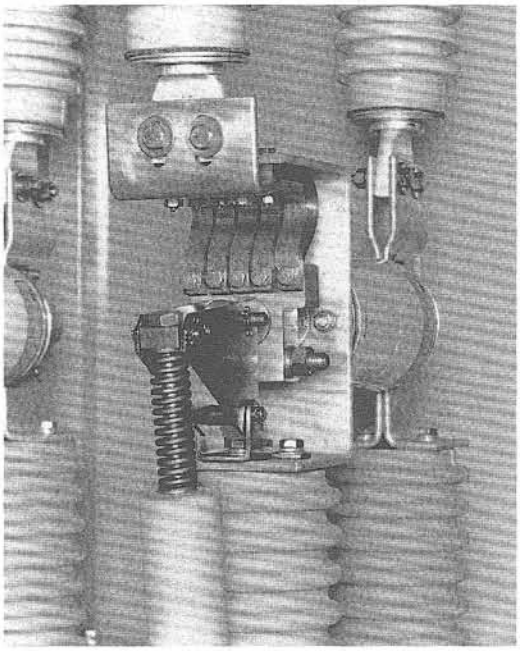

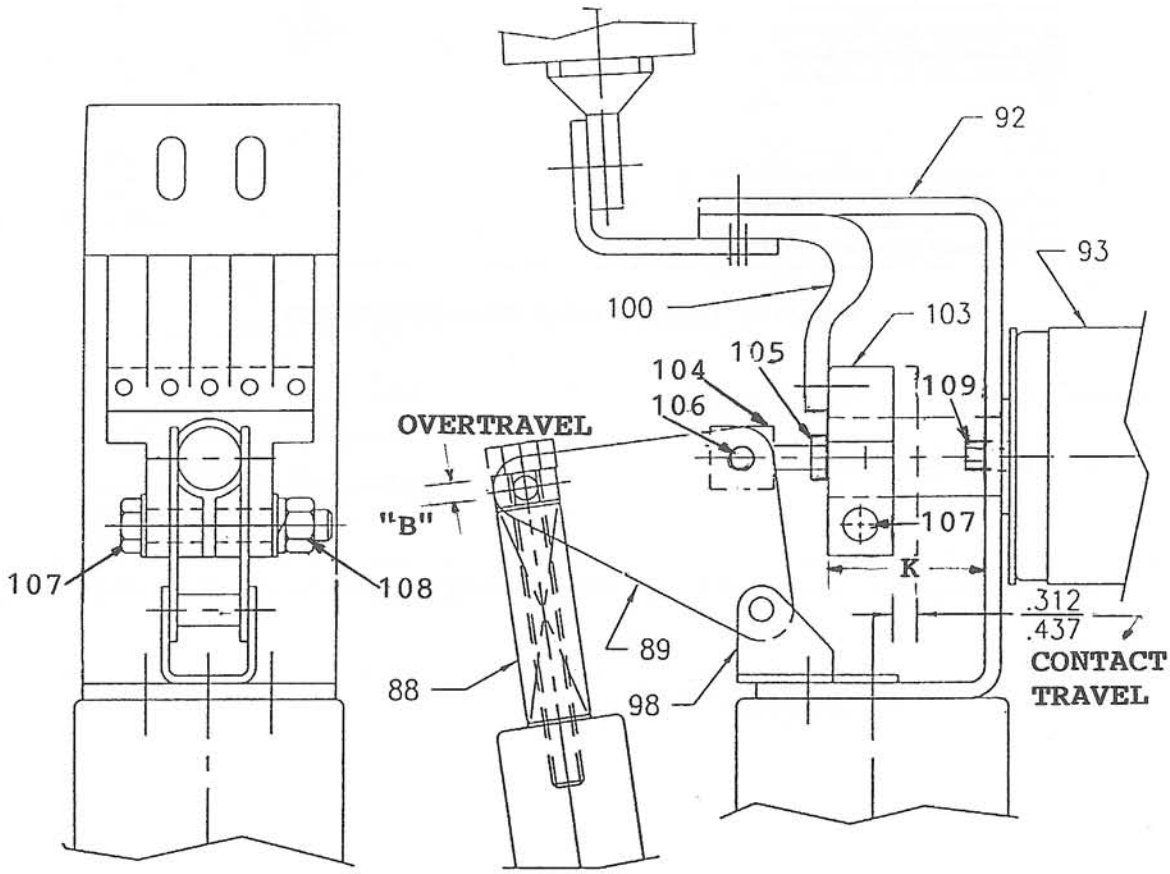

88. Overtravel Spring
89. Operating Lever (2)
92. Support Bracket
93. Vacuum Interrupter
98. Pivot Bracket
100. Flexible Shunt
103. Contact Block
104. Interrupter Stem Adjusting Bolt
105. Jam Nut
106. Hinge Pin
107. Contact Block Bolt
108. Contact Block Nut
109. Interrupter Support Nuts (2)

Figure 16. Mechanism at Moving Contact End of Interrupter

ABB Power T&D Company Inc.

PERMISSIBLE TRAVEL LIMITS
.312 IN. TO .437 IN.

PART 270P285H01 BLOOMINGTON, IN U.S.A.

Figure 17. Travel Limit Nameplate

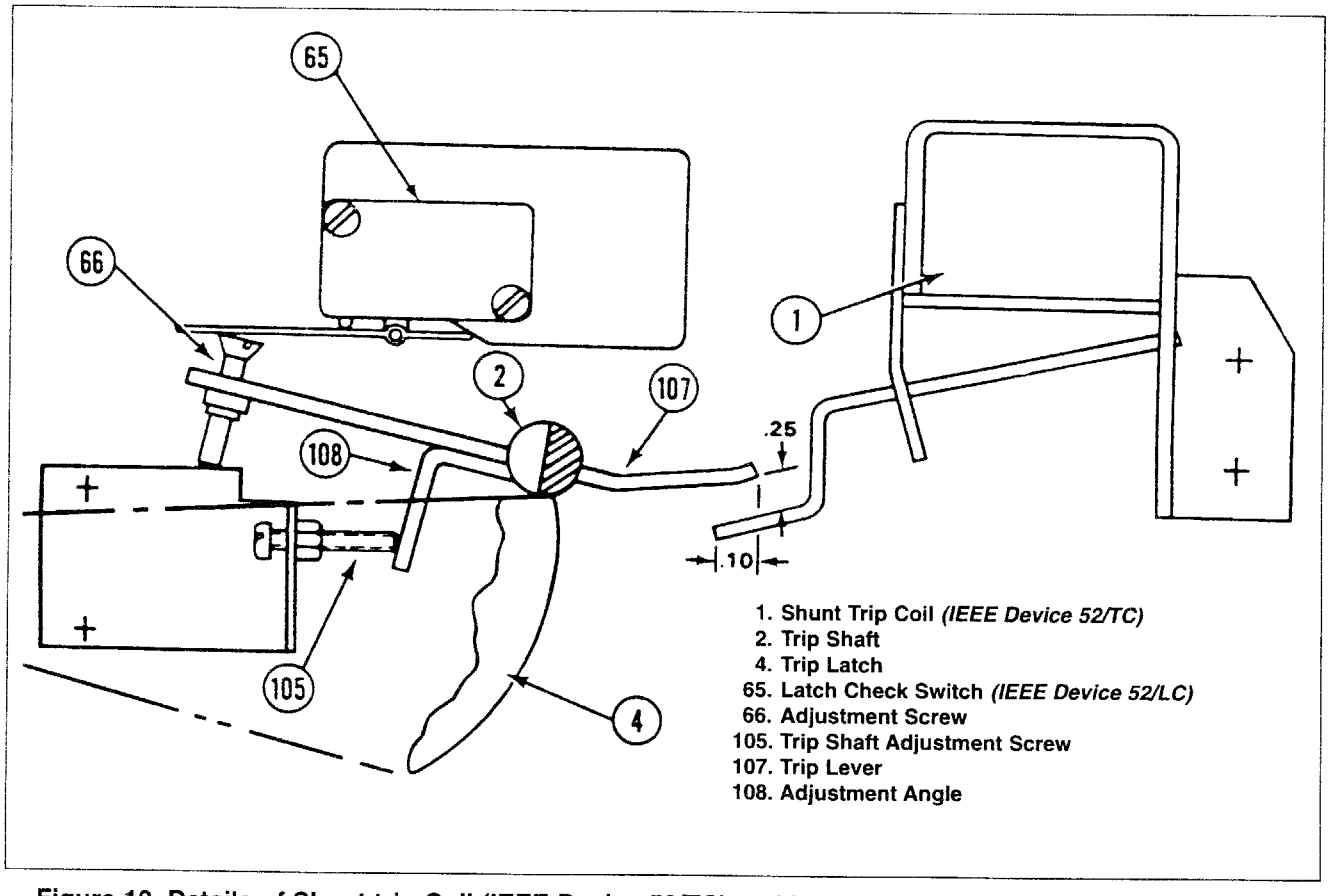

Figure 18. Details of Shunt trip Coil (IEEE Device 52/TC) and Latch Check Switch (IEEE Device 52/LC)

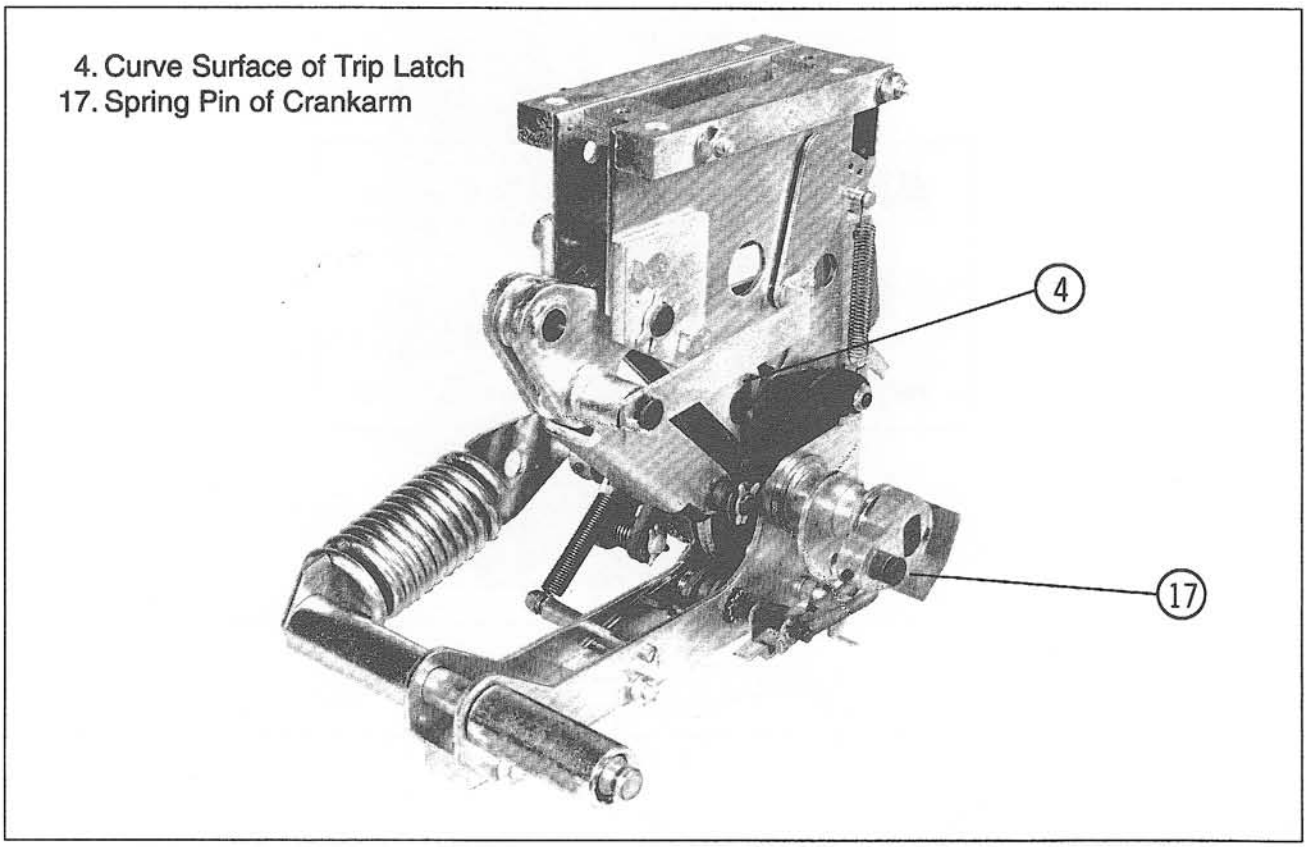

Figure 19. Lubrication Points: Left Side of Mechanism

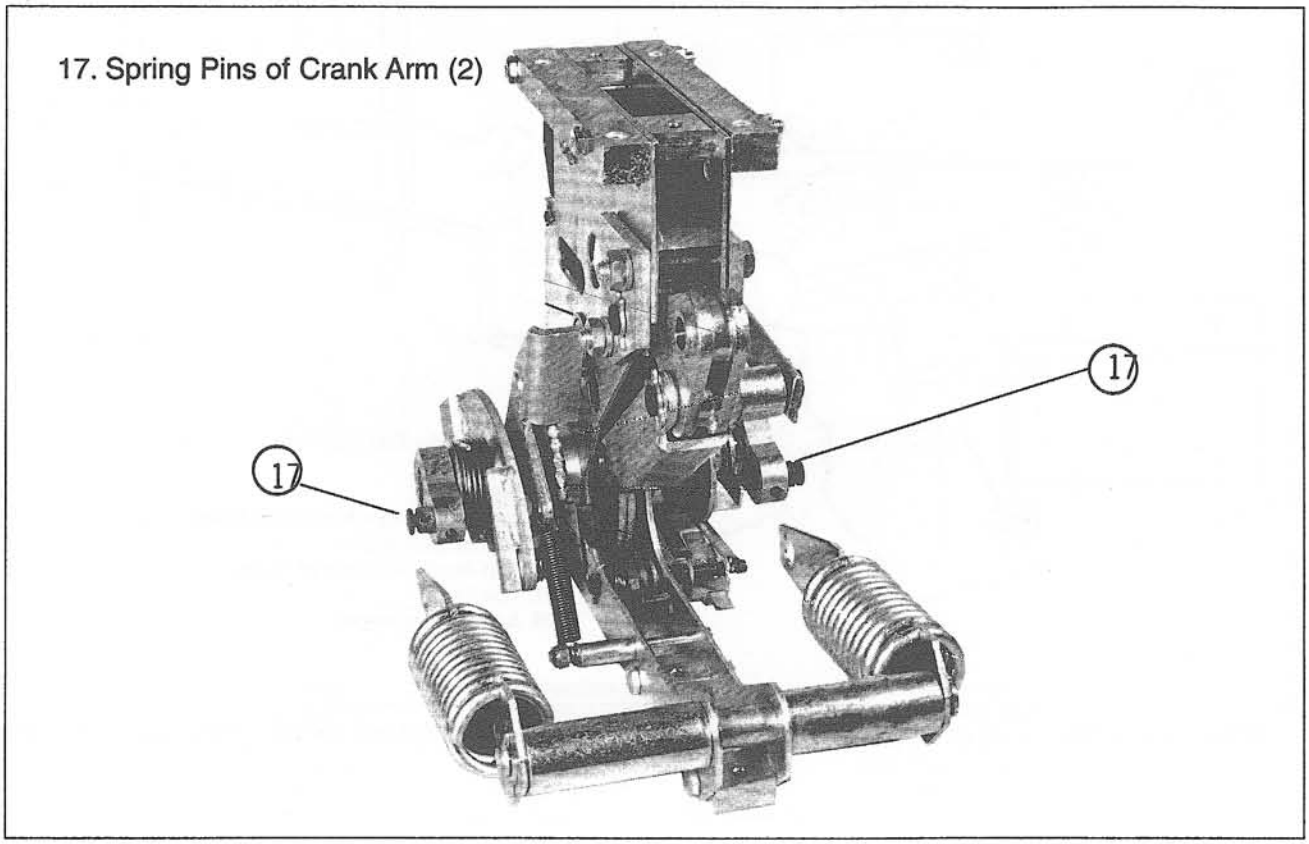

Figure 20. Lubrication Points: Right Side of Mechanism

2. End Bearings of Trip Shaft

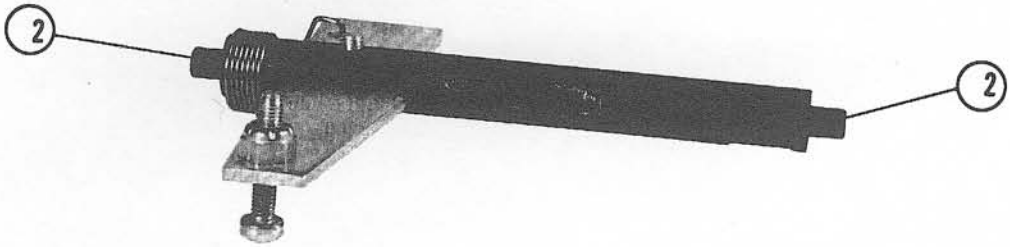

Figure 21. Lubrication Points: Trip Shaft