138 kV, Type O Plus C II Condenser Bushings
Technical Guide

Power and productivity
for a better world™

Table of contents

1 Introduction

The 138 kV, Type O Plus C II condenser bushing replaces the Type AB, 138 kV, condenser bushing. Both the electrical characteristics and physical dimensions are unchanged in the transition from Type AB to Type O Plus C II bushing. The change does two things: 1) the Type O Plus C II bushing uses much simpler style numbers (very similar to the standard Type O Plus C bushing) and 2) the Type O Plus C II bushing is not reconfigurable in the field except to change from 800 A draw-lead to 1200 A bottom connected with appropriate conversion kit.

1.1 Style Number

The style number for the 138 kV, Type O Plus C II condenser bushing will be written as: 138Z*nnnnAA where nnnn* is the current rating in amperes except in the case of TBI (transformer breaker interchangeable). In the TBI bushing these characters are written to show the current rating when applied to a transformer and when applied to an oil circuit breaker. The final two characters eg, *AA,* are used by ABB to describe the other characteristics of the bushing. Note that the fourth character "Z" becomes "Y" for brown porcelain.

1.1.1 Style Number Examples

Type O Plus C II Style Number	Replaces	Information
138Z0800AA	1ZUA138012-AAASEEABBCG Through CK	Standard 138 kV bushing 800 A, draw-lead
138Z1216AK	1ZUA138012-AAASEWCXX	Standard 138 kV bushing 1200 A, bottom connect transformer and 1600 A for circuit breaker application
138Z1200AJ	1ZUA138012-AAASEDAXX	Standard 138 kV bushing 1200 A, draw rod
138Z1620AC	1ZUA138020-AAASMWCXX	Standard 138 kV bushing 1600 A, bottom connect transformer and 2000 A for circuit breaker application
138Z0800XA	1ZUA138012-AACSEEABBCG Through CK	Extended creep 800 A, draw-lead
138Z1620XC	1ZUA138020-AACSMWCXX	Extended creep, 1600 A, bottom connect transformer and 2000 A for circuit breaker application
138Z1216XK	1ZUA138012-AACSEWCXX	Extended creep 1200 A, bottom connect transformer and 1600 A for circuit breaker application
138Z3000XW	1ZUA138030-AACSMWCXX	Extended creep 3000 A, bottom connect

2 Basic Characteristics

2.1 Standards

The 138 kV Type O Plus C II condenser bushing meets all requirements of the IEEE bushing standards, ie, C57.19.00, C57.19.01, C57.19.100 C57 and IEEE Seismic standard 693 (qualified at HIGH level). These bushings will also meet the thermal requirements of the CSA bushing standard and the electrical requirements of IEC 137.

2.2 Ratings

The standard ratings for this family of bushings are as follows:

Nominal system voltage =	138 kV
Maximum line-to ground voltage =	88 kV
Lighting impulse voltage withstand (BIL) =	650 kV BIL
Current rating =	see outline drawing
Creep distance =	min 44 mm/kV$_{L-G}$ & see outline drawing
Seismic (IEEE 693) =	High

2.3 Features

The 138 kV Type O Plus C II bushing is designed to operate under "Usual Service Conditions" as defined in IEEE C57.19.00, *IEEE Standard General Requirements and Test Procedures for Power Apparatus Bushings.*

Figure 1

The 138 kV Type O Plus C II bushing is of center-clamped construction, ie, the bushing is held together by the action of clamping springs which act on the bushing conductor tube and hold the entire bushing assembly under a compressive load. The bushing is built around the central conductor tube on which the condenser body is wound. The up-per and lower insulators, mounting flange, flange extension, spring assembly, sight bowl, lower support and clamping nut form an oil tight shell to contain the condenser and insulating oil. O-rings in grooves and/or flat fiber reinforced gaskets create the seals between components. High grade transformer oil fills the space between the shell and the condenser. This oil is part of the insulating and cooling systems of the bushing. Above the oil, there is a gas space to provide for thermal expansion of the oil. The gas space is filled with dehydrated nitrogen gas.

The bushing oil level is easily visible in the sight bowl. The sight bowl is prismatic to enhance observation of the oil level. See *Figure 1*.

The mounting flange and flange extension are high strength corrosion-resistant aluminum.

The upper (air-side) insulator is a one-piece, high quality porcelain with a shed configuration designed for maximum performance. The insulator meets the IEEE requirement for "Heavy Creep" which is 44 mm/ kV_{L-G}. Note that higher creep versions are also available.

2.4 Mounting

The 138 kV Type O Plus C II bushing is suitable for use at angles of up to 60 degrees from the vertical position.

2.5 Voltage Tap

The bushing is provided with a Type A (normally grounded) voltage tap as described in Figure 1 of the IEEE Standard C57.19.01. This tap is connected to one of the inner foil electrodes of the condenser. ABB tests the voltage tap at 20 kV, 50/60 Hz for 1 minute.

This tap is grounded under normal operation. If the voltage tap is used in conjunction with a potential/monitoring device, the voltage between the tap and ground should be limited to 6 kV.

3 Testing

As part of the manufacturing process, the bushing is subject to a number of routine tests.

3.1 Pressure/Vacuum Tests

Vacuum tightness is performed at nearly a full vacuum and a test is made with an oil over pressure of 41 psig for 8 hours at ambient temperature. No evidence of a leak is permitted.

3.2 Electrical Tests

Each bushing is subject to final electrical tests at ambient temperature with the lower end of the bushing submerged in transformer oil. The power-factor and capacitance are measured and the bushing is subjected to a one-minute power frequency test at a level of one-half the BIL rating. During power frequency testing the level of partial discharge is carefully monitored. The power-factor and capacitance are also confirmed after the one-minute test.

4 Bushing Loading

4.1 Current Rating & Over Load

The current rating of the 138 kV Type O Plus C II bushing indicates the maximum continuous rating of the device without abnormal loss of life. ABB designs these bushings for overloading according to IEEE Standard C57.19.100 with loss of life not to exceed the calculations included in that standard.

4.2 Short Circuit Current Rating

The bushing will withstand a short circuit of 25 times rated current for 2 seconds or the I^2t equivalent with the following exceptions:

Draw-lead bushings: short circuit rating is defined by the draw-lead cable

Draw-rod applications have contacts with short circuit ratings of 20 times the continuous rating for not more than 2 seconds and a dynamic peak not to exceed 2.5 times the rms value of the fault.

For short circuit loss of life data relative to the bushing condenser insulation, contact ABB.

4.3 Draw-Lead Application

The sizing of the draw-lead cable is the responsibility of the transformer designer. The maximum rated current for the bushing in the draw-lead application is 800 amperes. The transformer designer must note the inside diameter of the bushing conductor tube because this will limit the choice of cable size. As a service to our transformer customers, we make the following suggestions relative to draw-lead cable size.

Suggested Draw-lead Cable Sizing		
Cable Size (MCM)	Cable Size (mm^2)	Maximum Continuous Current
450	228	440
800	405	670
900	456	750
1000	507	800

5 Recommended Positioning

The maximum stresses in the oil at the lower end of the bushing must be limited to those values normal for uninsulated conductors of similar components in the same transformer. The lower insulator must be totally under oil for all operating conditions.

The following recommendations are intended as guidelines only. ABB recommends that specific design calculations be made to verify the proper clearances.

5.1 Distance of Grounded Edge from Live Parts

Within the angle of 0°- 45°from the end of the ground sleeve, the “Radius A” shall be a minimum of 0.125" (3.175 mm).

Within the angle of 45°- 60°from the end of the ground sleeve, the “Radius B” shall be a minimum of 0.25" (6.35 mm).

5.2 Distance of Grounded Flat Surface from Live Parts

“S” is the minimum distance from bushing live parts to a large surface such as a tank wall or core clamp.

5.3 Shielding of Exposed Threads

When applying these recommendations, all exposed threads must be shielded using a static shield assembly, bolting collar assembly or other appropriate shielding method.

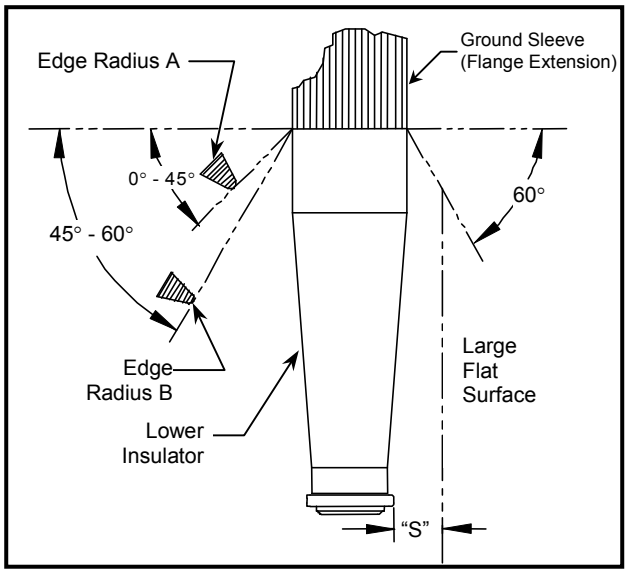

Figure 2

Minimum Electrical Clearances	
Dimension “S” (inches)	6.50
Dimension “S” (mm)	165

6 Ordering Details

When ordering please specify the following:

- Bushing type and style number
- Current Rating
- Voltage Class and BIL
- Special requirements

- Special Requirements: Any nonstandard requirement, such as impulse tests or high temperature application, must be specified at the time of quotation.

6.1 Draw-lead Connected

If a draw-lead bushing is ordered, it will be shipped with the standard draw-lead connector as shown in *Figure 3*. In many cases, ABB has other draw-lead connectors. If you cannot use the standard draw-lead connector, please contact ABB for connectors.

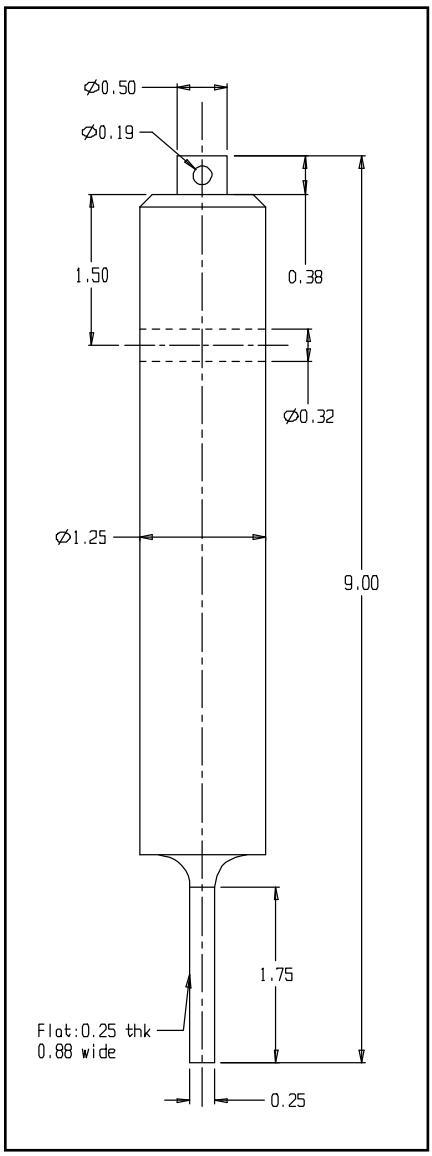

Figure 3

6.2 Bottom Connected

The 138 kV Type O Plus C II bushing generally has the IEEE Std C57.19.01-2000 lower end configuration. Connection is made directly to the lower support of the bushing. Figure 4 shows the various lower support configurations for this line of bushings.

6.3 Draw-rod Connected

Draw-rod configurations of 138 kV Type O Plus C II bushings are available. *Figure 6* shows a typical draw-rod configuration. Bushings that are suitable for draw-rod applications have an opening through the main axis of the bushing conductor. The draw-rod is pulled through this opening and secured at the top of the bushing. This makes it possible to remove/install bushings without draining the apparatus on which it is applied. With this application the current is not carried by the rod but is transferred to the bushing conductor at the lower end of the bushing. Therefore, the draw-rod rating of the bushing is the same as for bottom connected. However, the rating of the bushing does not affect the rating of the draw-rod. The rating of the bushing/draw-rod combination is never greater than the maximum rating of the lower rated component.

6.4 Top Terminal Connections

The Type AB bushings in this Technical Guide generally have IEEE Std C57.19.01 top terminals (see *Figure 4*). The purchaser can order bushings with other terminals if desired. The choice of terminals may affect price and/or delivery.

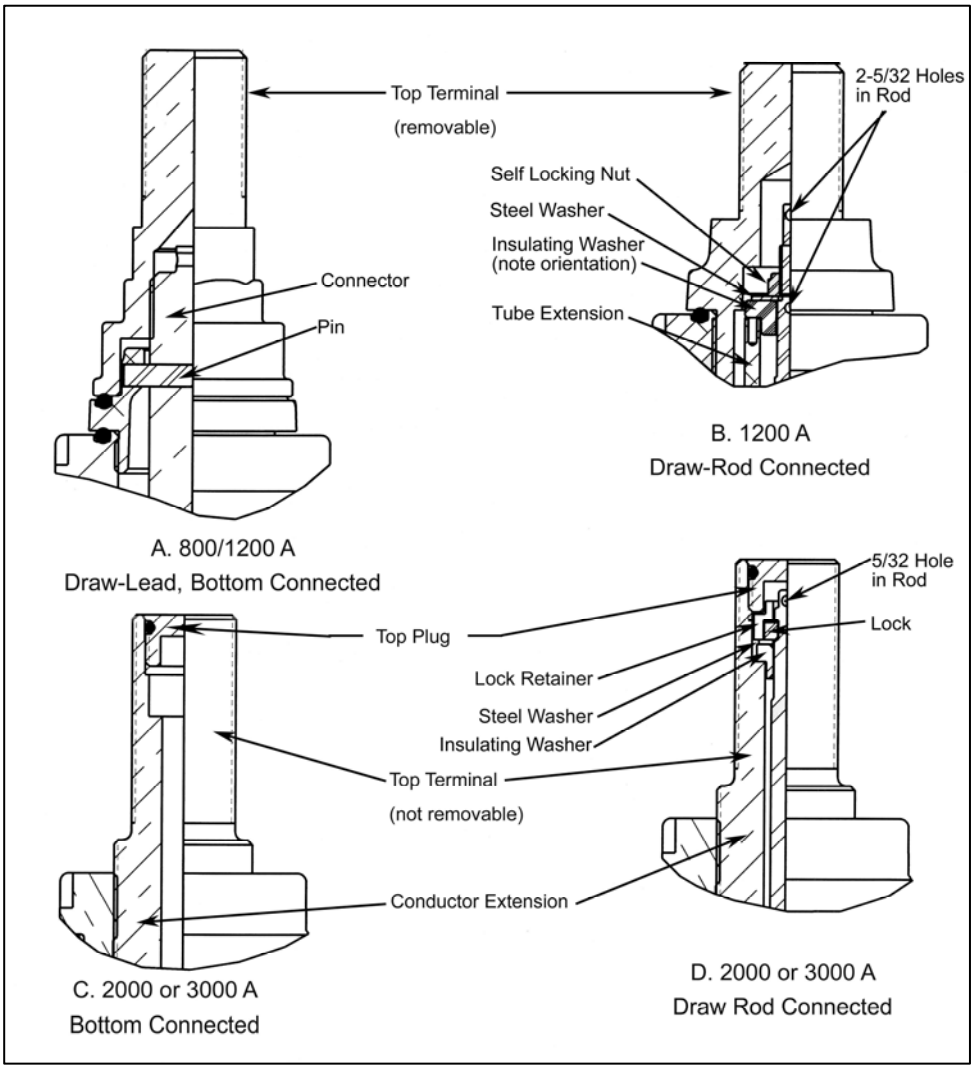
Top Terminal
(removable)
2-5/32 Holes
in Rod
Self Locking Nut
Steel Washer
Insulating Washer
(note orientation)
Tube Extension
Connector
Pin
B. 1200 A
Draw-Rod Connected
A. 800/1200 A
Draw-Lead, Bottom Connected
5/32 Hole
in Rod
Lock
Top Plug
Lock Retainer
Steel Washer
Insulating Washer
Top Terminal
(not removable)
Conductor Extension
C. 2000 or 3000 A
Bottom Connected
D. 2000 or 3000 A
Draw Rod Connected

Figure 4

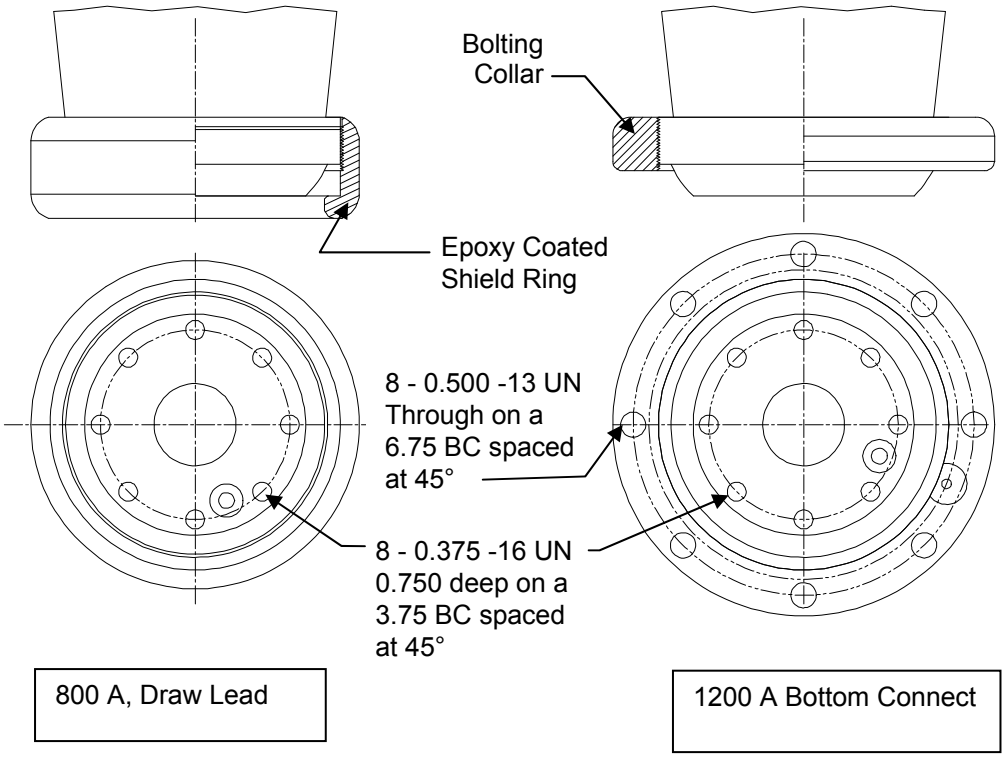
Bolting
Collar
Epoxy Coated
Shield Ring
8 - 0.500 -13 UN
Through on a
6.75 BC spaced
at 45°
8 - 0.375 -16 UN
0.750 deep on a
3.75 BC spaced
at 45°
800 A, Draw Lead
1200 A Bottom Connect

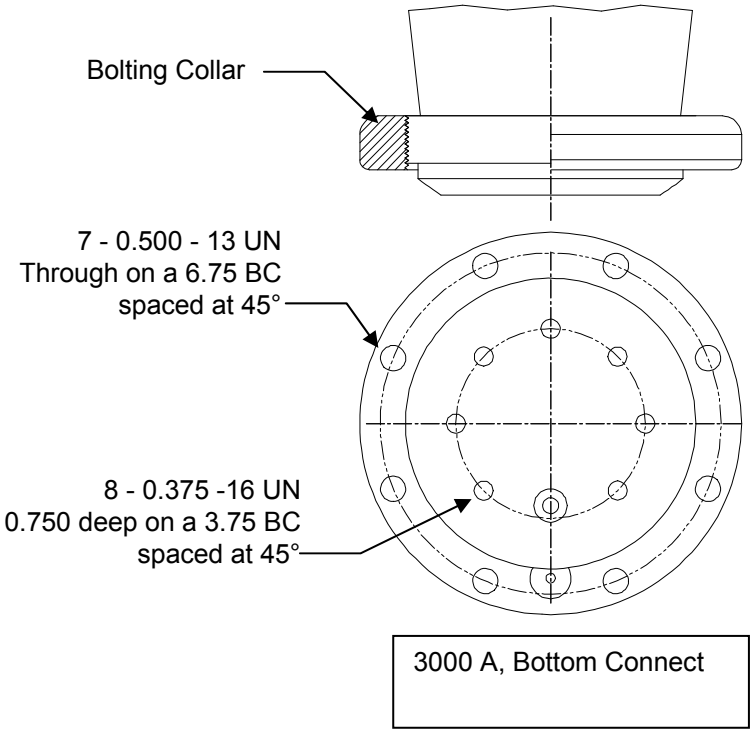
Bolting Collar
7 - 0.500 - 13 UN
Through on a 6.75 BC
spaced at 45°
8 - 0.375 -16 UN
0.750 deep on a 3.75 BC
spaced at 45°
3000 A, Bottom Connect

Figure 5

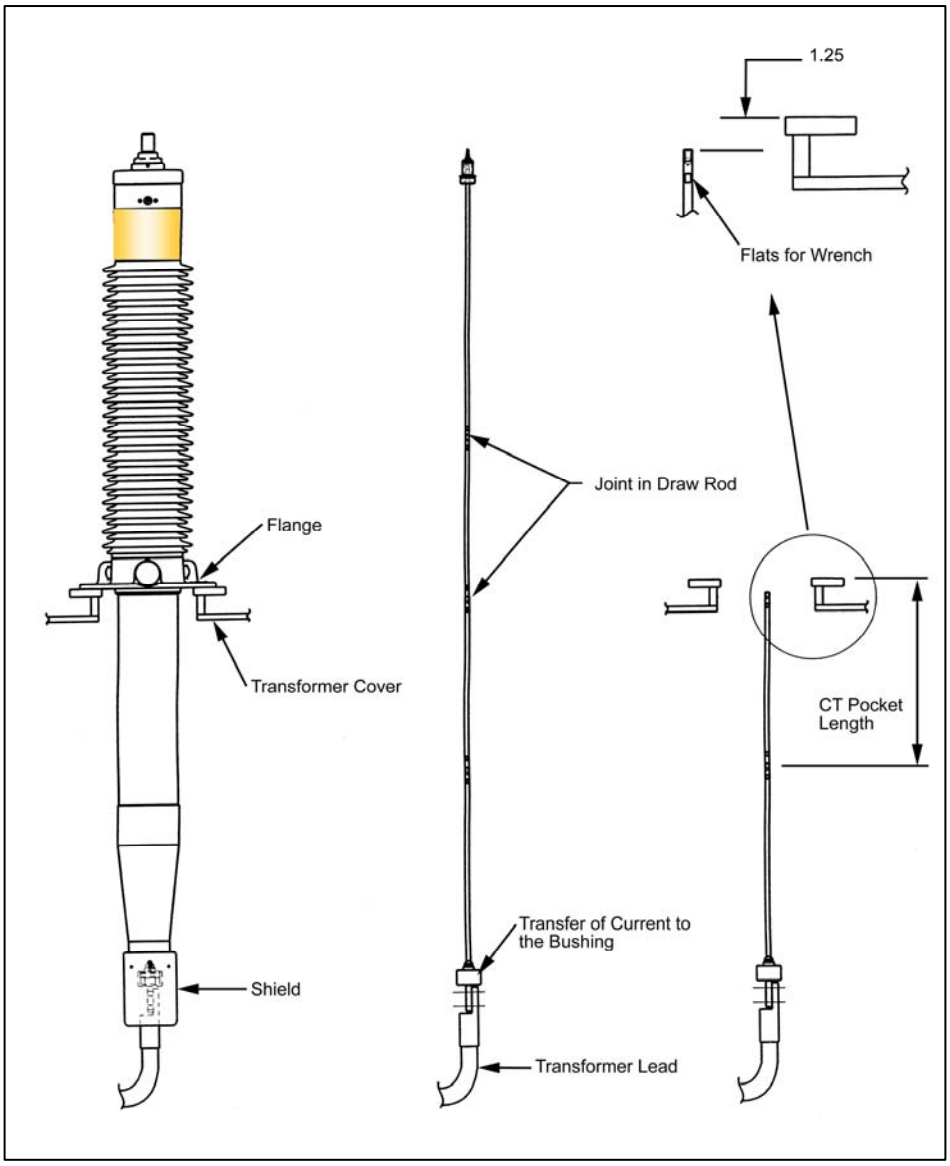
1.25
Flats for Wrench
Joint in Draw Rod
Flange
Transformer Cover
CT Pocket
Length
Transfer of Current to
the Bushing
Shield
Transformer Lead

Figure 6

Contact us

ABB Inc
Components & Insulation
Product Group
1128 South Cavalier Drive
Alamo, Tennessee 38001, USA
+1 731 696 5561
+1 800 955 8399
Fax: +1 731 696 5377
Email:
Alamo.customer_service @us.abb.com
www.abb.com/electricalcomponents

Power and productivity
for a better world™