3

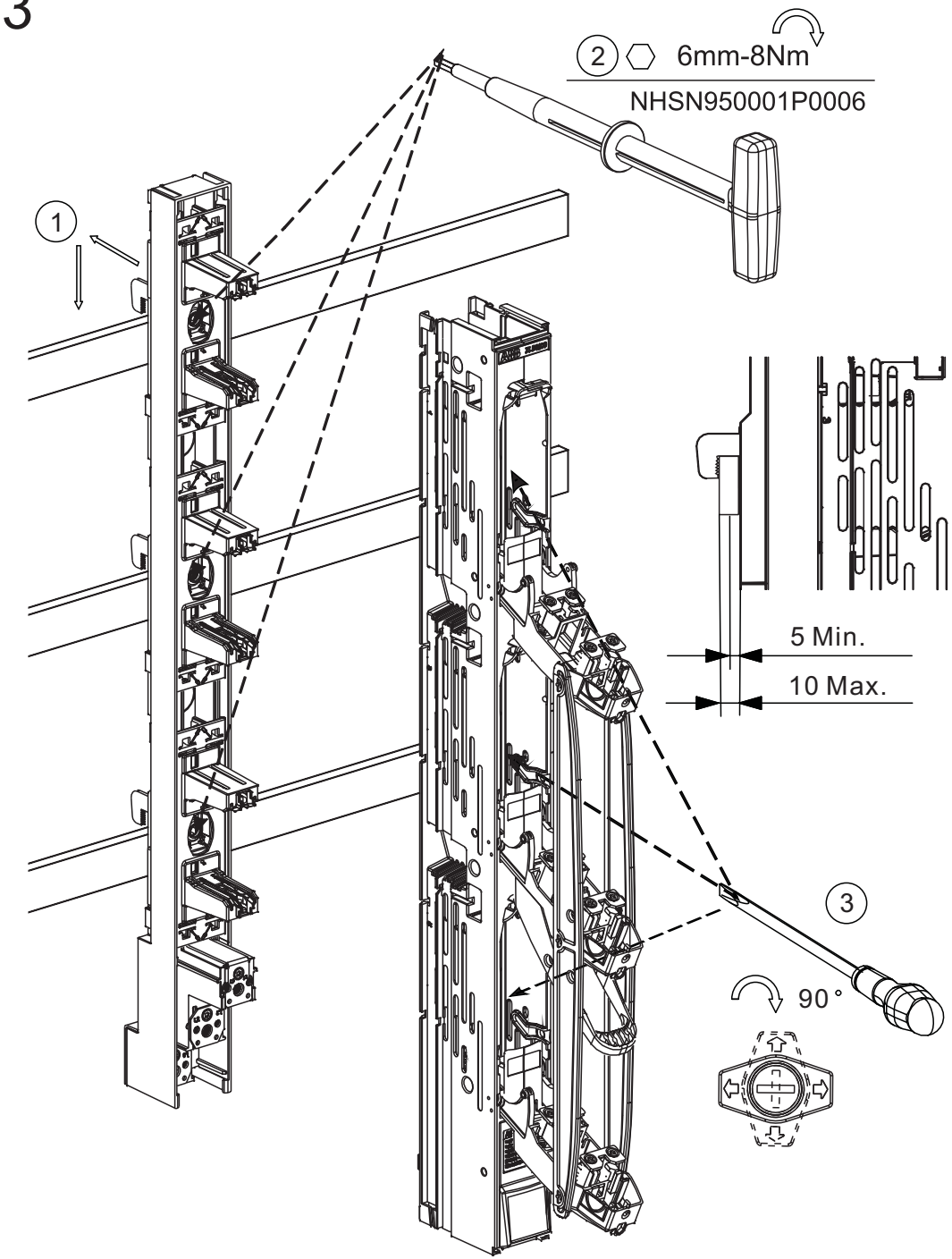

Montasjeveiledning Installation Instruction Montageanleitung	Title ZLBM00 hook clamp installation instruction
	Document number 1SEP619603P0001
	Revision A
ABB AS Division Low Voltage Products Skien Norway	

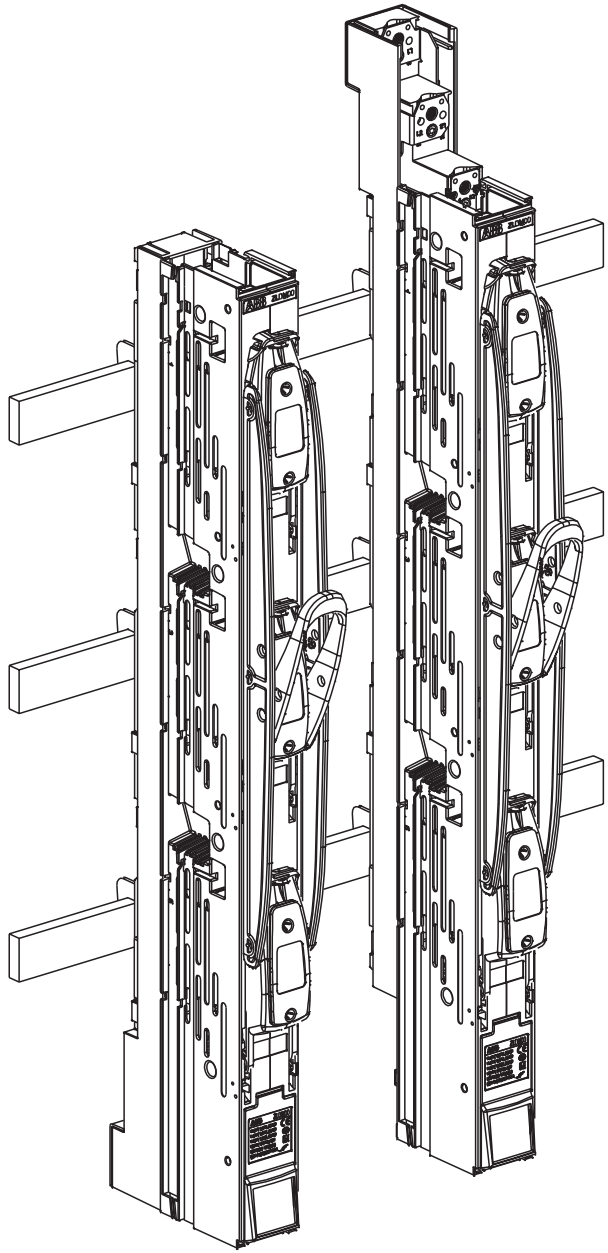

1

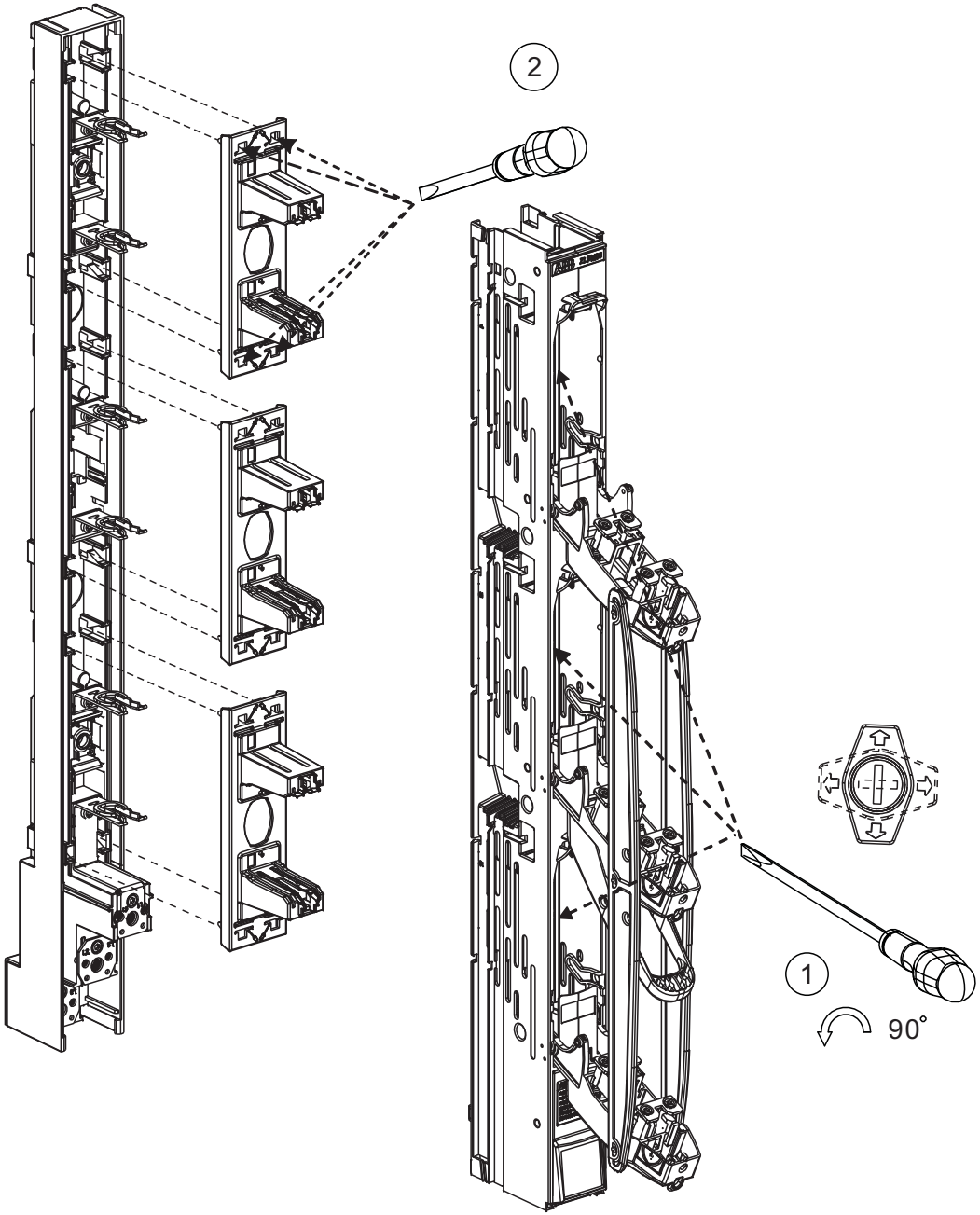
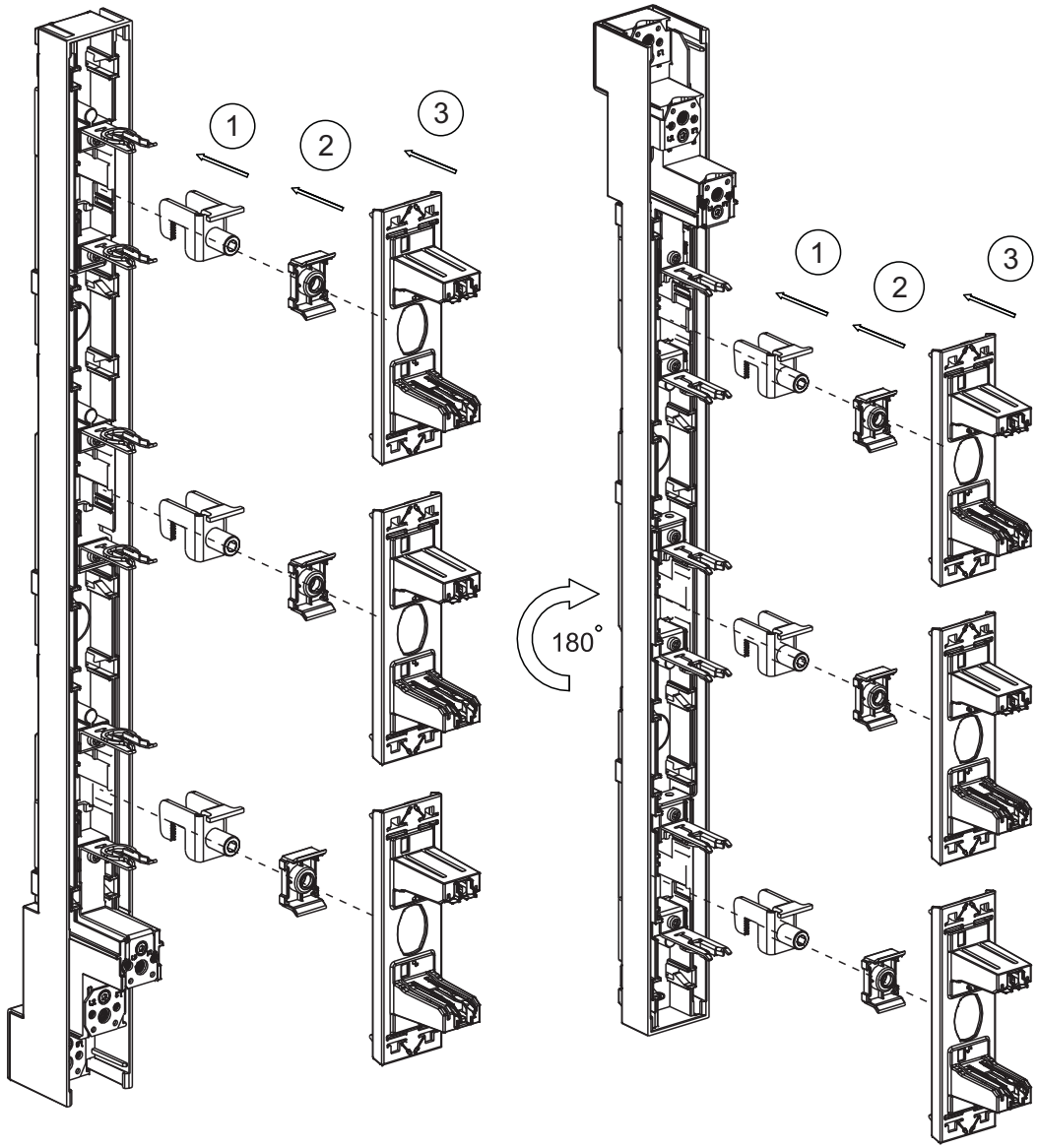
2