Relion® 650 series

Transformer protection RET650
Application Manual

Power and productivity
for a better world™

Document ID: 1MRK 504 128-UEN
Issued: June 2012
Revision: -
Product version: 1.2

Copyright

Trademarks

Warranty

Please inquire about the terms of warranty from your nearest ABB representative.

ABB AB

Substation Automation Products

SE-721 59 Västerås

Sweden

Telephone: +46 (0) 21 32 50 00

Facsimile: +46 (0) 21 14 69 18

http://www.abb.com/substationautomation

Disclaimer

The data, examples and diagrams in this manual are included solely for the concept or product description and are not to be deemed as a statement of guaranteed properties. All persons responsible for applying the equipment addressed in this manual must satisfy themselves that each intended application is suitable and acceptable, including that any applicable safety or other operational requirements are complied with. In particular, any risks in applications where a system failure and/or product failure would create a risk for harm to property or persons (including but not limited to personal injuries or death) shall be the sole responsibility of the person or entity applying the equipment, and those so responsible are hereby requested to ensure that all measures are taken to exclude or mitigate such risks.

This document has been carefully checked by ABB but deviations cannot be completely ruled out. In case any errors are detected, the reader is kindly requested to notify the manufacturer. Other than under explicit contractual commitments, in no event shall ABB be responsible or liable for any loss or damage resulting from the use of this manual or the application of the equipment.

Conformity

This product complies with the directive of the Council of the European Communities on the approximation of the laws of the Member States relating to electromagnetic compatibility (EMC Directive 2004/108/EC) and concerning electrical equipment for use within specified voltage limits (Low-voltage directive 2006/95/EC). This conformity is the result of tests conducted by ABB in accordance with the product standards EN 50263 and EN 60255-26 for the EMC directive, and with the product standards EN 60255-1 and EN 60255-27 for the low voltage directive. The product is designed in accordance with the international standards of the IEC 60255 series.

Table of contents

Section 1 Introduction

1.1 This manual

The application manual contains application descriptions and setting guidelines sorted per function. The manual can be used to find out when and for what purpose a typical protection function can be used. The manual can also be used when calculating settings.

1.2 Intended audience

This manual addresses the protection and control engineer responsible for planning, pre-engineering and engineering.

The protection and control engineer must be experienced in electrical power engineering and have knowledge of related technology, such as protection schemes and communication principles.

1.3 Product documentation

1.3.1 Product documentation set

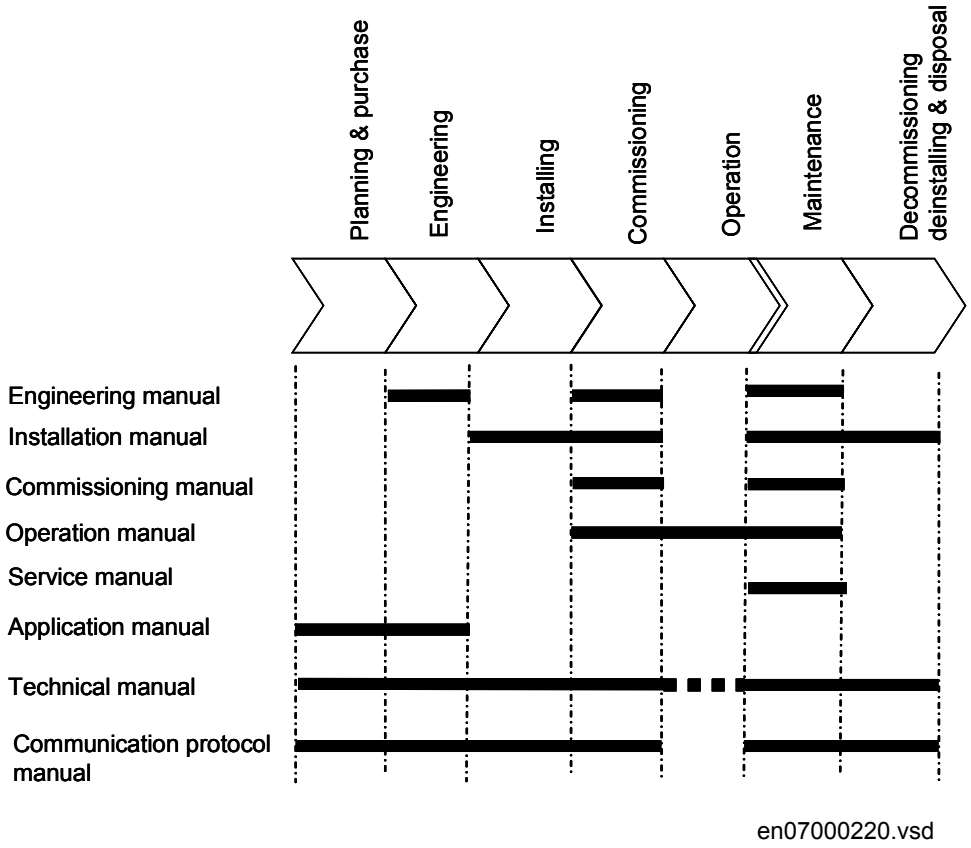

Figure 1: The intended use of manuals in different lifecycles

The engineering manual contains instructions on how to engineer the IEDs using the different tools in PCM600. The manual provides instructions on how to set up a PCM600 project and insert IEDs to the project structure. The manual also recommends a sequence for engineering of protection and control functions, LHMI functions as well as communication engineering for IEC 60870-5-103, IEC 61850 and DNP3.

The installation manual contains instructions on how to install the IED. The manual provides procedures for mechanical and electrical installation. The chapters are organized in chronological order in which the IED should be installed.

The commissioning manual contains instructions on how to commission the IED. The manual can also be used by system engineers and maintenance personnel for assistance during the testing phase. The manual provides procedures for checking of external circuitry and energizing the IED, parameter setting and configuration as

well as verifying settings by secondary injection. The manual describes the process of testing an IED in a substation which is not in service. The chapters are organized in chronological order in which the IED should be commissioned.

The operation manual contains instructions on how to operate the IED once it has been commissioned. The manual provides instructions for monitoring, controlling and setting the IED. The manual also describes how to identify disturbances and how to view calculated and measured power grid data to determine the cause of a fault.

The service manual contains instructions on how to service and maintain the IED. The manual also provides procedures for de-energizing, de-commissioning and disposal of the IED.

The application manual contains application descriptions and setting guidelines sorted per function. The manual can be used to find out when and for what purpose a typical protection function can be used. The manual can also be used when calculating settings.

The technical manual contains application and functionality descriptions and lists function blocks, logic diagrams, input and output signals, setting parameters and technical data sorted per function. The manual can be used as a technical reference during the engineering phase, installation and commissioning phase, and during normal service.

The communication protocol manual describes a communication protocol supported by the IED. The manual concentrates on vendor-specific implementations.

The point list manual describes the outlook and properties of the data points specific to the IED. The manual should be used in conjunction with the corresponding communication protocol manual.

1.3.2 Document revision history

Document revision/date	History
-/June 2012	First release

1.3.3 Related documents

Documents related to RET650	Identity number
Application manual	1MRK 504 128-UEN
Technical manual	1MRK 504 129-UEN
Commissioning manual	1MRK 504 130-UEN
Product Guide, configured	1MRK 504 131-BEN
Type test certificate	1MRK 504 131-TEN
Application notes for Circuit Breaker Control	1MRG006806

650 series manuals	Identity number
Communication protocol manual, DNP3	1MRK 511 257-UEN
Communication protocol manual, IEC 61850–8–1	1MRK 511 258-UEN
Communication protocol manual, IEC 60870-5-103	1MRK 511 259-UEN
Cyber Security deployment guidelines	1MRK 511 268-UEN
Point list manual, DNP3	1MRK 511 260-UEN
Engineering manual	1MRK 511 261-UEN
Operation manual	1MRK 500 095-UEN
Installation manual	1MRK 514 015-UEN

1.4 Symbols and conventions

1.4.1 Symbols

The electrical warning icon indicates the presence of a hazard which could result in electrical shock.

The warning icon indicates the presence of a hazard which could result in personal injury.

The caution icon indicates important information or warning related to the concept discussed in the text. It might indicate the presence of a hazard which could result in corruption of software or damage to equipment or property.

The information icon alerts the reader of important facts and conditions.

The tip icon indicates advice on, for example, how to design your project or how to use a certain function.

Although warning hazards are related to personal injury, it is necessary to understand that under certain operational conditions, operation of damaged equipment may result in degraded process performance leading to personal injury or death. Therefore, comply fully with all warning and caution notices.

1.4.2 Document conventions

A particular convention may not be used in this manual.

- Abbreviations and acronyms in this manual are spelled out in the glossary. The glossary also contains definitions of important terms.
- Push button navigation in the LHMI menu structure is presented by using the push button icons.
  To navigate between the options, use ↑ and ↓.
- HMI menu paths are presented in bold.
  Select **Main menu/Settings**.
- LHMI messages are shown in Courier font.
  To save the changes in non-volatile memory, select `Yes` and press ↵.
- Parameter names are shown in italics.
  The function can be enabled and disabled with the *Operation* setting.
- The ^ character in front of an input or output signal name in the function block symbol given for a function, indicates that the user can set an own signal name in PCM600.
- The * character after an input or output signal name in the function block symbol given for a function, indicates that the signal must be connected to another function block in the application configuration to achieve a valid application configuration.

Section 2 Application

2.1 RET650 application

RET650 provides fast and selective protection, monitoring and control for two- and three-winding transformers, autotransformers, generator-transformer units and shunt reactors. The transformer IED is designed to operate correctly over a wide frequency range in order to accommodate power system frequency variations during disturbances and generator start-up and shut-down.

A very fast differential protection function with automatic CT ratio matching and vector group compensation makes this IED the ideal solution even for the most demanding applications. Since RET650 has very low requirements on the main CTs, no interposing CTs are required.The differential protection function is provided with 2nd harmonic and wave-block restraint features to avoid tripping for magnetizing inrush current, and 5th harmonic restraint to avoid tripping for overexcitation.

The differential function offers a high sensitivity for low-level internal faults. The unique and innovative sensitive differential protection feature of the RET650 provides the best possible coverage for winding internal turn-to-turn faults, based on the theory of symmetrical components .

A low impedance restricted earth-fault protection function is available as a complimentary sensitive and fast main protection against winding earth faults. This function includes a directional zero-sequence current criterion for additional security.

The binary inputs are heavily stabilized against disturbance to prevent incorrect operations at for example, dc system capacitive discharges or DC earth faults.

Tripping from pressure relief/buchholz and temperature devices can be done through the transformer IED where trip signal conditioning can be performed (pulsing, lockout, additional logics, etc). The binary inputs are heavily stabilized against disturbances to prevent incorrect operations for example, during DC system capacitive discharges or DC earth faults.

Versatile phase, earth, negative and zero sequence overcurrent functions which can be made directional provide further alternative backup protection. Thermal overload with two time-constants, volts per hertz and over/under voltage protection functions are also available.

A built-in disturbance and event recorder provides valuable data to the user about status and operation for post-fault disturbance analysis.

Breaker failure protection allows high speed back-up tripping of surrounding breakers.

Three packages have been defined for the following applications:

- Two-winding transformer in single breaker arrangements (A01)
- Three-winding transformer in single breaker arrangements (A05)
- Tap changer control (A07)

The packages are configured and ready for direct use. Analog and tripping IO has been pre-defined for basic use. Other signals need to be applied as required for each application.

The graphical configuration tool ensures simple and fast testing and commissioning.

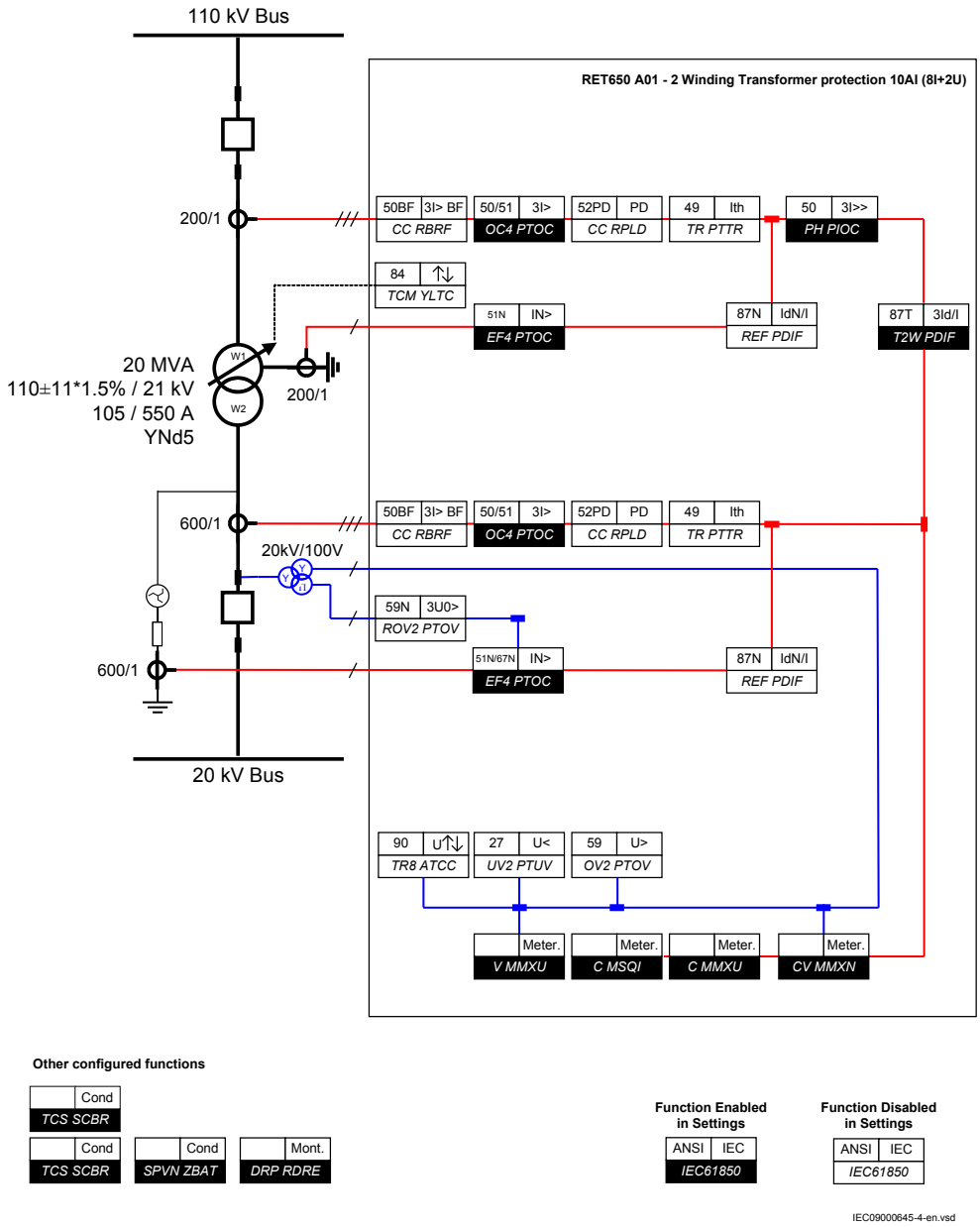

Figure 2: A typical protection application for a two-winding transformer in single breaker arrangement

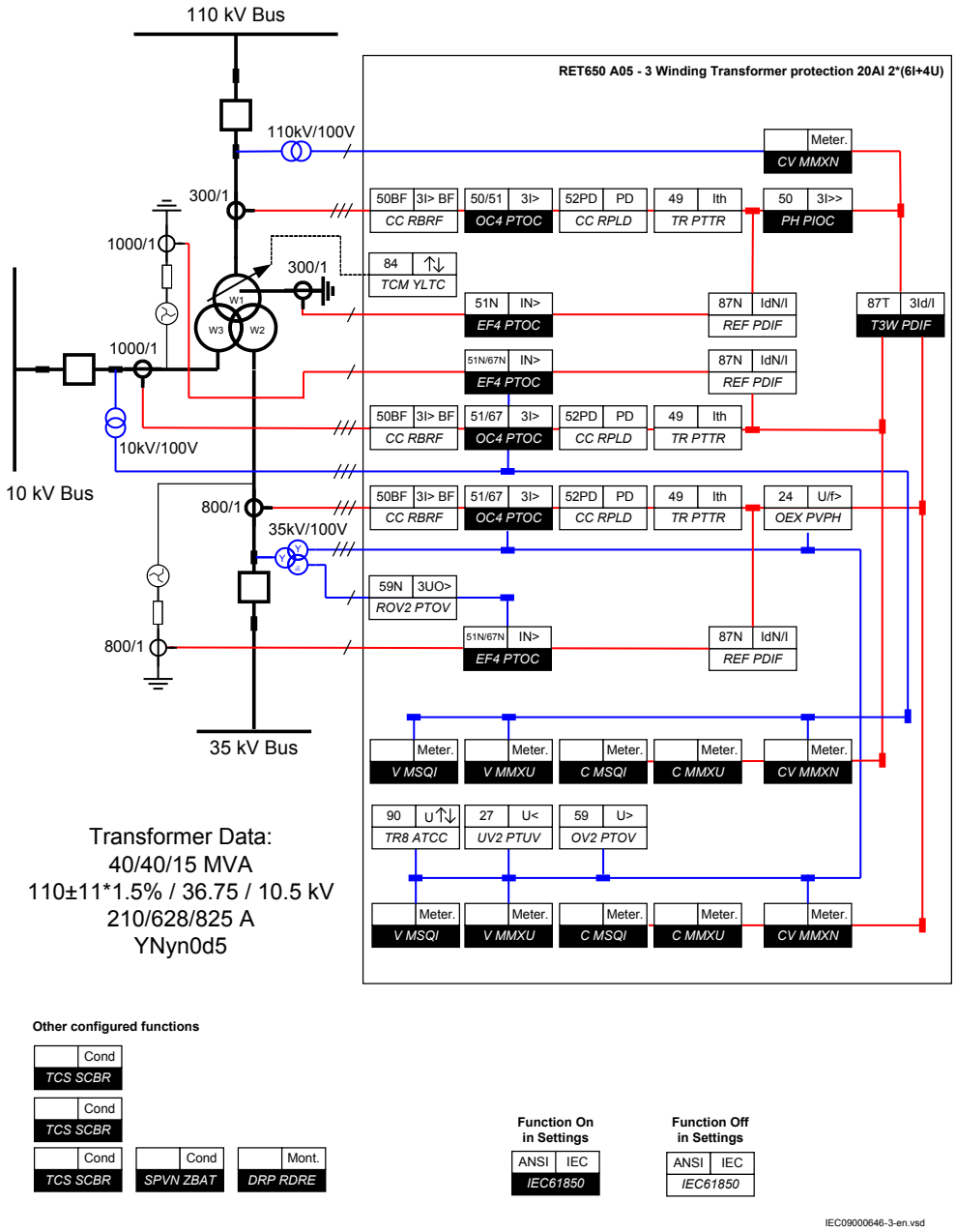

Figure 3: A typical protection application for a three-winding transformer in single breaker arrangement

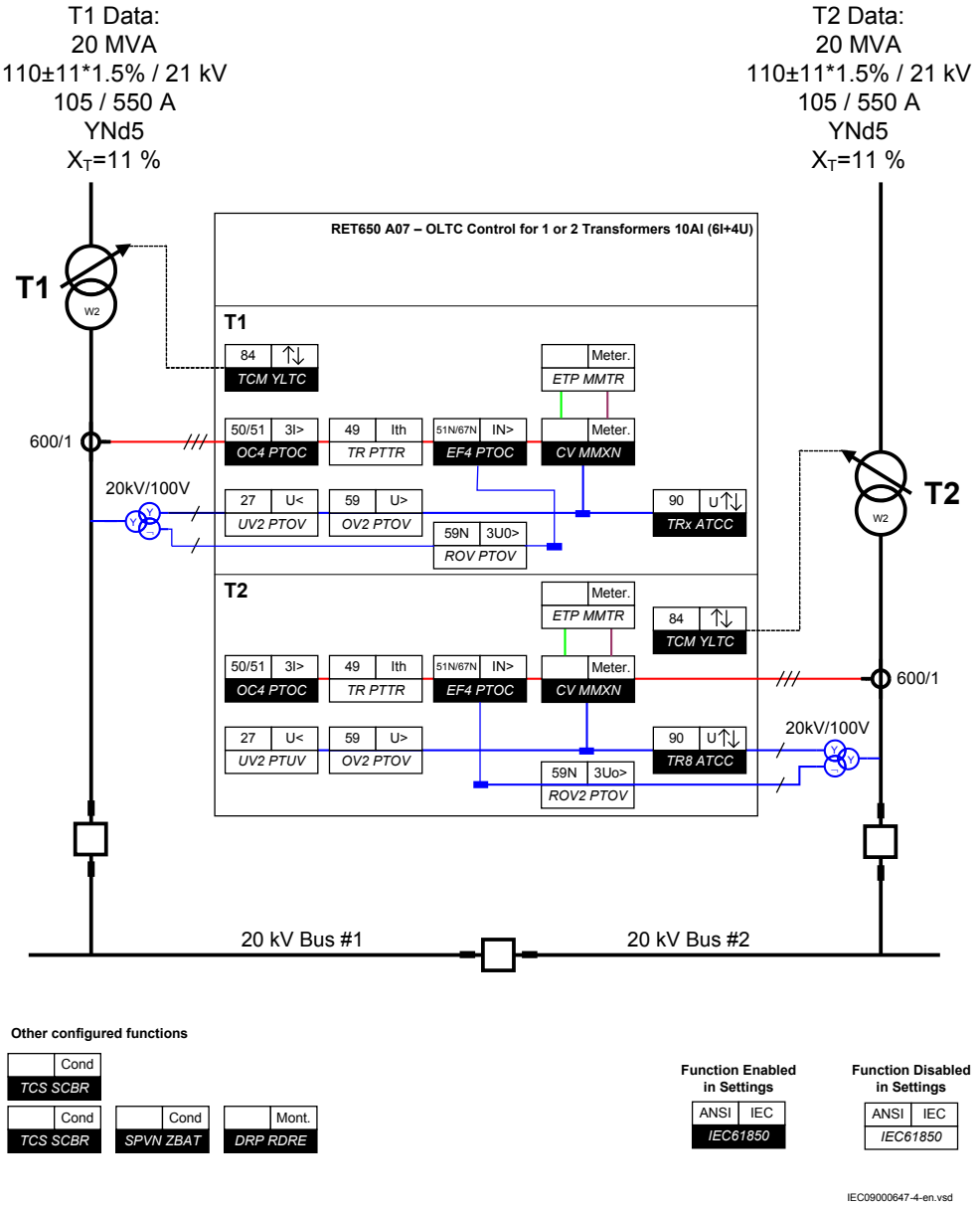

Figure 4: A typical tap changer control application for one or two transformers

2.2 Available functions

2.2.1 Main protection functions

IEC 61850/ Function block name	ANSI	Function description	Transformer			
			RET650	RET650 (A01) 2W/1CB	RET650 (A05) 3W/1CB	RET650 (A07) OLTC
Differential protection						
T2WPDIF	87T	Transformer differential protection, two winding	0–1	1		
T3WPDIF	87T	Transformer differential protection, three winding	0–1		1	
REFPDIF	87N	Restricted earth fault protection, low impedance	0–3	2	3	
HZPDIF	87	1Ph High impedance differential protection	0–2	2	2	

2.2.2 Back-up protection functions

IEC 61850/ Function block name	ANSI	Function description	Transformer			
			RET650	RET650 (A01) 2W/1CB	RET650 (A05) 3W/1CB	RET650 (A07) OLTC
Current protection						
PHPIOC	50	Instantaneous phase overcurrent protection, 3–phase output	0–3	2	3	
OC4PTOC	51	Four step phase overcurrent protection, 3–phase output		2		2
OC4PTOC	51/67	Four step directional phase protection, 3–phase output	0–3		3	
EFPIOC	50N	Instantaneous residual overcurrent protection	0–3	2	3	
EF4PTOC	51N/67N	Four step residual overcurrent protection, zero/ negative sequence direction	0–3	2	3	2
TRPTTR	49	Thermal overload protection, two time constants	0–3	2	3	2
CCRBRF	50BF	Breaker failure protection, 3–phase activation and output	0–3	2	3	
CCRPLD	52PD	Pole discordance protection	0–3	2	3	
GUPPDUP	37	Directional underpower protection	0–2	1	1	2
GOPPDOP	32	Directional overpower protection	0–2	1	1	2
DNSPTOC	46	Negative sequence based overcurrent function	0–2	1	2	
Voltage protection						
UV2PTUV	27	Two step undervoltage protection	0–2	1	1	2

Table continues on next page

IEC 61850/ Function block name	ANSI	Function description	Transformer			
			RET650	RET650 (A01) 2W/1CB	RET650 (A05) 3W/1CB	RET650 (A07) OLTC
OV2PTOV	59	Two step overvoltage protection	0–2	1	1	2
ROV2PTOV	59N	Two step residual overvoltage protection	0–2	1	1	2
OEXPVPH	24	Overexcitation protection	0–1	1	1	
Frequency protection						
SAPTUF	81	Underfrequency function	0–4	4	4	4
SAPTOF	81	Overfrequency function	0–4	4	4	4
SAPFRC	81	Rate-of-change frequency protection	0–4	2	2	4

2.2.3 Control and monitoring functions

IEC 61850/Function block name	ANSI	Function description	Transformer			
			RET650	RET650 (A01) 2W/1CB	RET650 (A05) 3W/1CB	RET650 (A07) OLTC
Control						
QCBAY		Bay control	1	1	1	1
LOCREM		Handling of LR-switch positions	1	1	1	1
LOCREMCTRL		LHMI control of Permitted Source To Operate (PSTO)	1	1	1	1
CBC2		Circuit breaker for 2CB	0–1	1		
CBC3		Circuit breaker for 3CB	0–1		1	
CBC4		Circuit breaker for 4CB	0–1			1
TR8ATCC	90	Automatic voltage control for tap changer, parallel control	0–2	1	1	2
TCMYLTC	84	Tap changer control and supervision, 6 binary inputs	0–2	1	1	2
SLGGIO		Logic Rotating Switch for function selection and LHMI presentation	15	15	15	15
VSGGIO		Selector mini switch extension	20	20	20	20
DPGGIO		IEC 61850 generic communication I/O functions double point	16	16	16	16
SPC8GGIO		Single point generic control 8 signals	5	5	5	5
AUTOBITS		AutomationBits, command function for DNP3.0	3	3	3	3
I103CMD		Function commands for IEC60870-5-103	1	1	1	1
I103IEDCMD		IED commands for IEC60870-5-103	1	1	1	1

Table continues on next page

IEC 61850/Function block name	ANSI	Function description	Transformer			
			RET650	RET650 (A01) 2W/1CB	RET650 (A05) 3W/1CB	RET650 (A07) OLTC
I103USRCMD		Function commands user defined for IEC60870-5-103	4	4	4	4
I103GENCMD		Function commands generic for IEC60870-5-103	50	50	50	50
I103POSCMD		IED commands with position and select for IEC60870-5-103	50	50	50	50
Secondary system supervision						
TCSSCBR		Breaker close/trip circuit monitoring	3	3	3	3
Logic						
SMPPTRC	94	Tripping logic, common 3–phase output	1–3	2	3	2
TMAGGIO		Trip matrix logic	12	12	12	12
OR		Configurable logic blocks, OR gate	283	283	283	283
INVERTER		Configurable logic blocks, Inverter gate	140	140	140	140
PULSETIMER		Configurable logic blocks, Pulse timer	40	40	40	40
GATE		Configurable logic blocks, Controllable gate	40	40	40	40
XOR		Configurable logic blocks, exclusive OR gate	40	40	40	40
LOOPDELAY		Configurable logic blocks, loop delay	40	40	40	40
TIMERSET		Configurable logic blocks, timer function block	40	40	40	40
AND		Configurable logic blocks, AND gate	280	280	280	280
SRMEMORY		Configurable logic blocks, set-reset memory flip-flop gate	40	40	40	40
RSMEMORY		Configurable logic blocks, reset-set memory flip-flop gate	40	40	40	40
FXDSIGN		Fixed signal function block	1	1	1	1
B16I		Boolean 16 to Integer conversion	16	16	16	16
B16IFCVI		Boolean 16 to Integer conversion with logic node representation	16	16	16	16
IB16A		Integer to Boolean 16 conversion	16	16	16	16
IB16FCVB		Integer to Boolean 16 conversion with logic node representation	16	16	16	16
Monitoring						
CVMMXN		Measurements	6	6	6	6
CMMXU		Phase current measurement	10	10	10	10
VMMXU		Phase-phase voltage measurement	6	6	6	6
CMSQI		Current sequence component measurement	6	6	6	6
VMSQI		Voltage sequence measurement	6	6	6	6
VNMMXU		Phase-neutral voltage measurement	6	6	6	6
AISVBAS		Function block for service values presentation of the analog inputs	1	1	1	1

Table continues on next page

IEC 61850/Function block name	ANSI	Function description	Transformer			
			RET650	RET650 (A01) 2W/1CB	RET650 (A05) 3W/1CB	RET650 (A07) OLTC
TM_P_P2		Function block for service values presentation of primary analog inputs 600TRM	1	1	1	1
AM_P_P4		Function block for service values presentation of primary analog inputs 600AIM	1	1	1	1
TM_S_P2		Function block for service values presentation of secondary analog inputs 600TRM	1	1	1	1
AM_S_P4		Function block for service values presentation of secondary analog inputs 600AIM	1	1	1	1
CNTGGIO		Event counter	5	5	5	5
DRPRDRE		Disturbance report	1	1	1	1
AxRADR		Analog input signals	4	4	4	4
BxRBDR		Binary input signals	6	6	6	6
SPGGIO		IEC 61850 generic communication I/O functions	64	64	64	64
SP16GGIO		IEC 61850 generic communication I/O functions 16 inputs	16	16	16	16
MVGGIO		IEC 61850 generic communication I/O functions	16	16	16	16
MVEXP		Measured value expander block	66	66	66	66
SPVNZBAT		Station battery supervision	0–1	1	1	1
SSIMG	63	Insulation gas monitoring function	0–2	2	2	2
SSIML	71	Insulation liquid monitoring function	0–2	2	2	2
SSCBR		Circuit breaker condition monitoring	0–3	2	3	2
I103MEAS		Measurands for IEC60870-5-103	1	1	1	1
I103MEASUSR		Measurands user defined signals for IEC60870-5-103	3	3	3	3
I103AR		Function status auto-recloser for IEC60870-5-103	1	1	1	1
I103EF		Function status earth-fault for IEC60870-5-103	1	1	1	1
I103FLTPROT		Function status fault protection for IEC60870-5-103	1	1	1	1
I103IED		IED status for IEC60870-5-103	1	1	1	1
I103SUPERV		Supervison status for IEC60870-5-103	1	1	1	1
I103USRDEF		Status for user defined signals for IEC60870-5-103	20	20	20	20

Table continues on next page

IEC 61850/Function block name	ANSI	Function description	Transformer			
			RET650	RET650 (A01) 2W/1CB	RET650 (A05) 3W/1CB	RET650 (A07) OLTC
Metering						
PCGGIO		Pulse counter logic	16	16	16	16
ETPMMTR		Function for energy calculation and demand handling	3	3	3	3

2.2.4 Communication

IEC 61850/Function block name	ANSI	Function description	Transformer			
			RET650	RET650 (A01) 2W/1CB	RET650 (A05) 3W/1CB	RET650 (A07) OLTC
Station communication						
IEC61850-8-1		IEC 61850 communication protocol	1	1	1	1
DNPGEN		DNP3.0 for TCP/IP communication protocol	1	1	1	1
RS485DNP		DNP3.0 for EIA-485 communication protocol	1	1	1	1
CH1TCP		DNP3.0 for TCP/IP communication protocol	1	1	1	1
CH2TCP		DNP3.0 for TCP/IP communication protocol	1	1	1	1
CH3TCP		DNP3.0 for TCP/IP communication protocol	1	1	1	1
CH4TCP		DNP3.0 for TCP/IP communication protocol	1	1	1	1
OPTICALDNP		DNP3.0 for optical serial communication	1	1	1	1
MSTSERIAL		DNP3.0 for serial communication protocol	1	1	1	1
MST1TCP		DNP3.0 for TCP/IP communication protocol	1	1	1	1
MST2TCP		DNP3.0 for TCP/IP communication protocol	1	1	1	1
MST3TCP		DNP3.0 for TCP/IP communication protocol	1	1	1	1
MST4TCP		DNP3.0 for TCP/IP communication protocol	1	1	1	1
RS485GEN		RS485	1	1	1	1
OPTICALPROT		Operation selection for optical serial	1	1	1	1
RS485PROT		Operation selection for RS485	1	1	1	1

Table continues on next page

IEC 61850/Function block name	ANSI	Function description	Transformer			
			RET650	RET650 (A01) 2W/1CB	RET650 (A05) 3W/1CB	RET650 (A07) OLTC
DNPFREC		DNP3.0 fault records for TCP/IP communication protocol	1	1	1	1
OPTICAL103		IEC60870-5-103 Optical serial communication	1	1	1	1
RS485103		IEC60870-5-103 serial communication for RS485	1	1	1	1
GOOSEINTLKRCV		Horizontal communication via GOOSE for interlocking	59	59	59	59
GOOSEBINRCV		GOOSE binary receive	4	4	4	4
GOOSEVCTRCONF		GOOSE VCTR configuration for send and receive	1	1	1	1
VCTRSEND		Voltage control sending block for GOOSE	1	1	1	1
GOOSEVCTRRCV		Voltage control receiving block for GOOSE	3	3	3	3
ETHFRNT ETHLAN1 GATEWAY		Ethernet configuration of front port, LAN1 port and gateway	1	1	1	1
GOOSEDPRCV		GOOSE function block to receive a double point value	32	32	32	32
GOOSEINTRCV		GOOSE function block to receive an integer value	32	32	32	32
GOOSEMVRCV		GOOSE function block to receive a measurand value	16	16	16	16
GOOSESPRCV		GOOSE function block to receive a single point value	64	64	64	64

2.2.5 Basic IED functions

IEC 61850/Function block name	Function description	
Basic functions included in all products		
INTERRSIG	Self supervision with internal event list	1
SELFSUPEVLST	Self supervision with internal event list	1
TIMESYNCHGEN	Time synchronization	1
SNTP	Time synchronization	1
DTSBEGIN, DTSEND, TIMEZONE	Time synchronization, daylight saving	1
IRIG-B	Time synchronization	1
SETGRPS	Setting group handling	1
ACTVGRP	Parameter setting groups	1
TESTMODE	Test mode functionality	1

Table continues on next page

IEC 61850/Function block name	Function description	
CHNGLCK	Change lock function	1
TERMINALID	IED identifiers	1
PRODINF	Product information	1
SYSTEMTIME	System time	1
RUNTIME	IED Runtime comp	1
PRIMVAL	Primary system values	1
SMAI_20_1 - SMAI_20_12	Signal matrix for analog inputs	2
3PHSUM	Summation block 3 phase	12
GBASVAL	Global base values for settings	6
ATHSTAT	Authority status	1
ATHCHCK	Authority check	1
SPACOMMMAP	SPA communication mapping	1
FTPACCS	FTP access with password	1
DOSFRNT	Denial of service, frame rate control for front port	1
DOSLAN1	Denial of service, frame rate control for LAN1	1
DOSSCKT	Denial of service, socket flow control	1
SAFEFILECOPY	Safe file copy function	1
SPATD	Date and time via SPA protocol	1
BCSCONF	Basic communication system	1

2.3 RET650 application examples

2.3.1 Adaptation to different applications

The IED has a pre-defined configuration and can be used in a wide range of applications. This is done by means of choice of functionality from the comprehensive function library in the IED.

The IED can be used in a wide range of applications. This is done by selecting from the comprehensive function library in the IED. A selection of common applications are described below.

- Application 1: Two-winding HV/MV, Y/Δ-transformer; HV:solidly earthed, MV:high impedance earthed
- Application 2: Two-winding HV/MV, Y/Y-transformer; HV:solidly earthed, MV:high impedance earthed
- Application 3: Three-winding HV/MV1/MV2, Y/Y/Δ- transformer; HV:solidly earthed, MV1:solidly earthed, MV2:high impedance earthed
- Application 4: Three-winding HV/MV1/MV2, Y/Y/Δ-transformer; HV:solidly earthed, MV1:solidly earthed, MV2:solidly earthed

2.3.2 Two-winding HV/MV, Y/Δ-transformer

This application example is a two-winding HV/MV, Y/Δ-transformer with the following properties:

- High voltage solidly earthed
- Medium voltage high impedance earthed

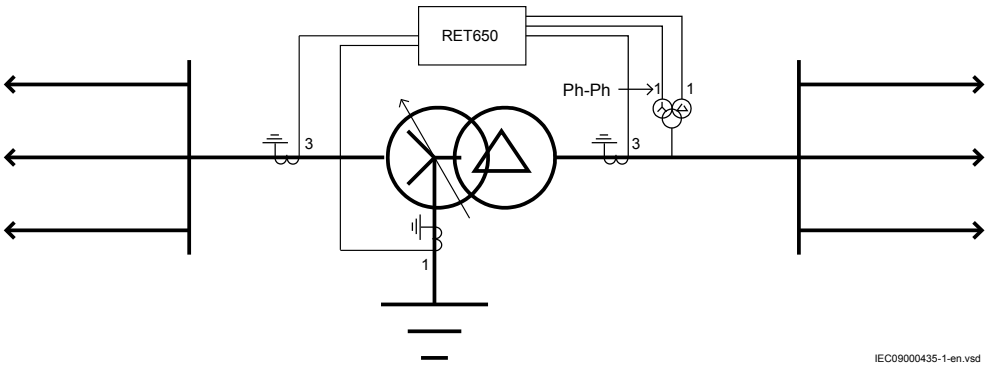

Figure 5: Two-winding HV/MV transformer, Y/Δ-transformer; HV:solidly earthed, MV:high impedance earthed

Table 1: Typical data for the transformer application

Item	Data
High voltage side system voltage (UN,HV)	110 – 220 kV
Medium voltage side system voltage (UM,HV)	11 – 110 kV
Transformer rated power (SN)	15 – 150 MVA
On line tap changer	On the HV-side winding
Short circuit power level infeed at HV-side	500 – 10 000 MVA
Short circuit power level infeed at MV-side	0 – 5 000 MVA

2.3.3 Two-winding HV/MV, Y/Y-transformer

This application example is a two-winding HV/MV Y/Y-transformer with the following properties:

- High voltage solidly earthed
- Medium voltage high impedance earthed

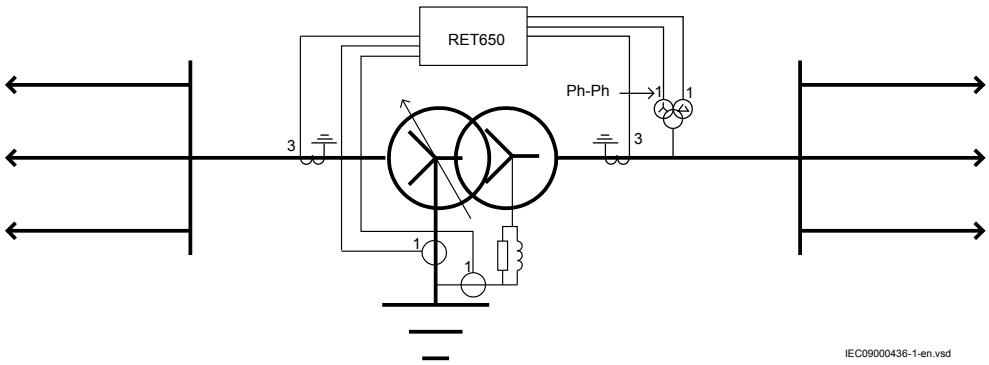

Figure 6: Two-winding HV/MV, Y/Y-transformer; HV:solidly earthed, MV:high impedance earthed

Table 2: Typical data for the transformer application

Item	Data
High voltage side system voltage (UN,HV)	110 – 220 kV
Medium voltage side system voltage (UM,HV)	11 – 110 kV
Transformer rated power (SN)	15 – 150 MVA
On line tap changer	On the HV-side winding
Short circuit power level infeed at HV-side	500 – 10 000 MVA
Short circuit power level infeed at MV-side	0 – 5 000 MVA

2.3.4 Functionality table

The proposal for functionality choice for the different application cases are shown in table 3.

In the table the recommendations has the following meaning:

- On: It is recommended to have the function activated in the application
- Off: It is recommended to have the function deactivated in the application
- Application dependent: The decision to have the function activated or not is dependent on the specific conditions in each case

Application 1 and Application 2 in table 3 are according to application examples given in previous sections.

Table 3: Selection of functions in different applications

Function	Application 1	Application 2
Transformer differential protection, two winding T2WPDIF	On	On
Restricted earth fault protection REFPDIF (instance 1)	On	On
Restricted earth fault protection REFPDIF (instance 2)	Application dependent	Application dependent
Instantaneous phase overcurrent protection PHPIOC (instance 1 on HV side)	On	On
Instantaneous phase overcurrent protection PHPIOC (instance 2 on MV side)	Off	Off
Four step phase overcurrent protection OC4PTOC (instance 1 on HV-side)	On	On
Four step phase overcurrent protection OC4PTOC (instance 2 on MV-side)	On	On
Instantaneous residual overcurrent protection EFPIOC (instance 1 on HV-side neutral point)	On	On
Instantaneous residual overcurrent protection EFPIOC (instance 2 on MV-side neutral point)	Off	Off
Four step residual overcurrent protection EF4PTOC (instance 1 on HV-side)	On	On
Four step residual overcurrent protection EF4PTOC (instance 2 on MV-side)	Application dependent	Application dependent
Thermal overload protection TRPTTR (instance 1 on HV-side)	On	On
Thermal overload protection, two time constants TRPTTR (instance 2 on MV-side)	Application dependent	Application dependent
Breaker failure protection CCRBRF (instance 1 on HV-side)	On	On
Breaker failure protection CCRBRF (instance 2 on MV-side)	On	On
Pole discordance protection CCRPLD	Application dependent	Application dependent
Directional under-power protection GUPPDUP	Application dependent	Application dependent
Directional over-power protection GOPPDOP	Application dependent	Application dependent
Negative sequence based overcurrent protection DNSPTOC	On	On
Two step undervoltage protection UV2PTUV	Application dependent	Application dependent
Two step overvoltage protection OV2PTOV	Application dependent	Application dependent
Two step residual overvoltage protection ROV2PTOV	On	On
Table continues on next page		

Function	Application 1	Application 2
Overexcitation protection OEXPVPH	Off	Off
Under frequency protection SAPTUF	Application dependent	Application dependent
Over frequency protection SAPTOF	Application dependent	Application dependent
Rate-of-change frequency protection SAPFRC	Application dependent	Application dependent
Breaker close/trip circuit monitoring TCSSCBR	On	On
Automatic voltage control for tap changer, single control TR1ATCC	On	On

2.3.5 Three-winding HV/MV1/MV2, Y/Y/Δ-transformer

This application example is a three-winding HV/MV1/MV2, Y/Y/Δ-transformer with the following properties:

- High voltage solidly earthed
- Medium voltage 1 solidly earthed
- Medium voltage 2 Delta

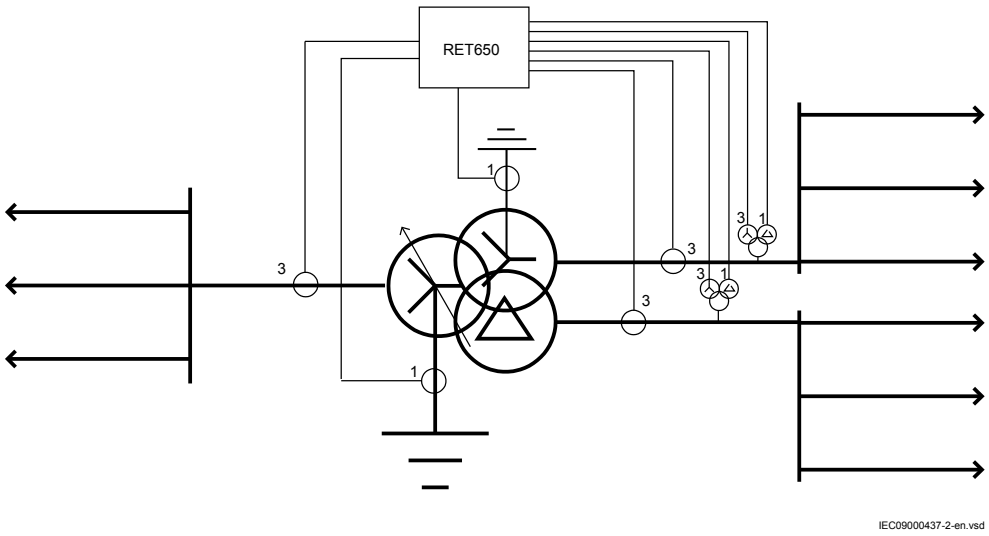

Figure 7: Three-winding HV/MV1/MV2, Y/Y/Δ-transformer; HV:solidly earthed, MV1:solidly earthed, MV2: Delta

Table 4: Typical data for the transformer application

Item	Data
High voltage side system voltage (UN,HV)	110 – 400 kV
Medium voltage side1 system voltage (UM1,HV)	11 – 110 kV
Medium voltage side2 system voltage (UM2,HV)	11 – 110 kV
Transformer rated power (SN)	25 – 500 MVA

Table continues on next page

Item	Data
On line tap changer	On the HV-side winding
Short circuit power level infeed at HV-side	500 – 10 000 MVA
Short circuit power level infeed at MV1-side	0 – 5 000 MVA
Short circuit power level infeed at MV2-side	0 – 5 000 MVA

2.3.6 Three-winding HV/MV1/MV2, Y/Y/Δ-transformer

This application example is a three-winding HV/MV1/MV2, Y/Y/Δ-transformer with the following properties:

- High voltage solidly earthed
- Medium voltage 1 solidly earthed
- Medium voltage 2 Delta

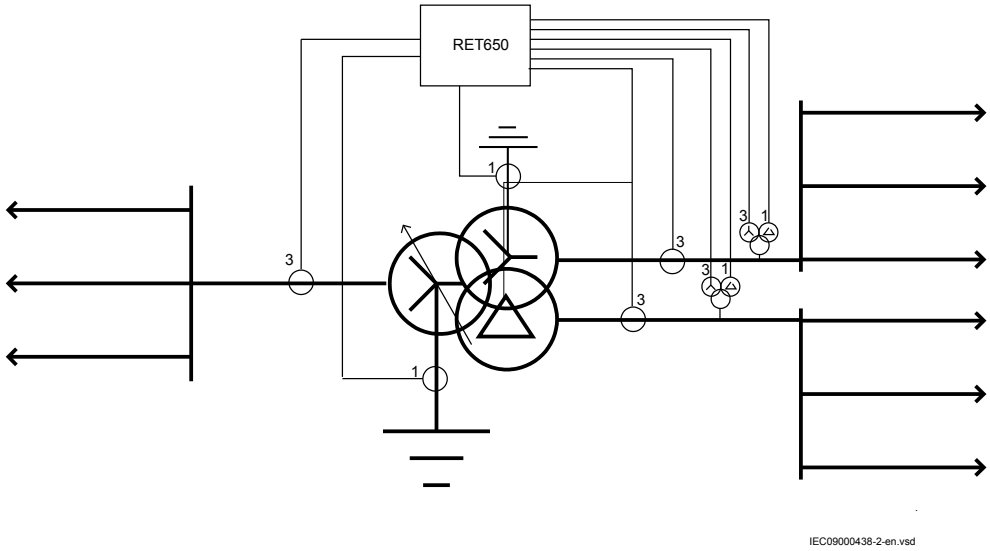

Figure 8: Three-winding HV/MV1/MV2, Y/Y/Δ-transformer; HV:solidly earthed, MV1:solidly earthed, MV2:Delta

Table 5: Typical data for the transformer application

Item	Data
High voltage side system voltage (UN,HV):	110 – 400 kV
Medium voltage side1 system voltage (UM1,HV)	11 – 110 kV
Medium voltage side2 system voltage (UM2,HV)	11 – 110 kV
Transformer rated power (SN)	25 – 500 MVA
On line tap changer	On the HV-side winding
Short circuit power level infeed at HV-side	500 – 10 000 MVA
Short circuit power level infeed at MV1-side	0 – 5 000 MVA
Short circuit power level infeed at MV2-side	0 – 5 000 MVA

2.3.7 Functionality table

The proposal for functionality choice for the different application cases are shown in table 6. In the table the recommendations has the following meaning:

- On: It is recommended to have the function activated in the application
- Off: It is recommended to have the function deactivated in the application
- Application dependent: The decision to have the function activated or not is dependent on the specific conditions in each case

Application 3 and Application 4 in table 6 are according to application examples given in previous sections.

Table 6: Selection of functions in different applications

Function	Application 3	Application 4
Transformer differential protection, three winding T3WPDIF	On	On
Restricted earth fault protection REFPDIF (instance 1 on HV-side)	On	On
Restricted earth fault protection REFPDIF (instance 2 on MV1-side)	On	Application dependent
Restricted earth fault protection REFPDIF (instance 3 on MV2-side)	Application dependent	Application dependent
Instantaneous phase overcurrent protection PHPIOC (instance 1 on HV side)	On	On
Instantaneous phase overcurrent protection PHPIOC (instance 2 on MV1-side)	Off	Off
Instantaneous phase overcurrent protection PHPIOC (instance 3 on MV2-side)	Off	Off
Four step phase overcurrent protection OC4PTOC (instance 1 on HV-side)	On	On
Four step phase overcurrent protection OC4PTOC (instance 2 on MV1-side)	On	On
Four step phase overcurrent protection OC4PTOC (instance 3 on MV2-side)	On	On
Instantaneous residual overcurrent protection EFPIOC (instance 1 on HV-side)	On	On
Instantaneous residual overcurrent protection EFPIOC (instance 2 on MV1-side)	Application dependent	Application dependent
Instantaneous residual overcurrent protection EFPIOC (instance 3 on MV2-side)	Off	Application dependent
Four step residual overcurrent protection EF4PTOC (HV side neutral point)	On	On
Four step residual overcurrent protection EF4PTOC (MV1 side neutral point)	On	On
Four step residual overcurrent protection EF4PTOC (MV2 side neutral point)	Application dependent	On
Thermal overload protection, two time constants TRPTTR (instance 1 on HV-side)	On	On
Thermal overload protection, two time constants TRPTTR (instance 2 on MV1-side)	Application dependent	Application dependent
Thermal overload protection, two time constants TRPTTR (instance 3 on MV2-side)	Application dependent	Application dependent
Breaker failure protection CCRBRF (instance 1 on HV-side)	On	On
Breaker failure protection CCRBRF (instance 2 on MV1-side)	On	On
Table continues on next page		

Function	Application 3	Application 4
Breaker failure protection CCRBRF (instance 3 on MV2-side)	On	On
Pole discordance protection CCRPLD	Application dependent	Application dependent
Directional under-power protection GUPPDUP	Application dependent	Application dependent
Directional over-power protection GOPPDOP	Application dependent	Application dependent
Two step undervoltage protection UV2PTUV	Application dependent	Application dependent
Two step overvoltage protection OV2PTOV	Application dependent	Application dependent
Two step residual overvoltage protection ROV2PTOV	On	On
Overexcitation protection OEXPVPH	On	On
Under frequency protection SAPTUF	Application dependent	Application dependent
Over frequency protection SAPTOF	Application dependent	Application dependent
Rate-of-change of frequency protection SAPFRC	Application dependent	Application dependent
Breaker close/trip circuit monitoring TCSSCBR	On	On
Automatic voltage control for tap changer, single control TR1ATCC	On	On

Section 3 RET650 setting examples

3.1 Setting example for a two-winding HV/MV transformer, Y/Δ-transformer

The application example has a 145/22 kV transformer as shown in figure 9.

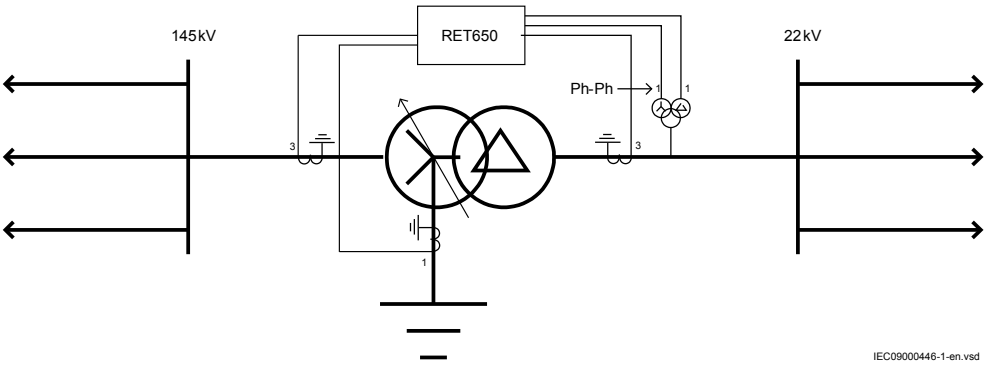

Figure 9: Two-winding HV/MV transformer, Y/Δ-transformer

Table 7: Typical data for the transformer application

The following data is assumed:

Item	Data
Transformer rated power SN	60 MVA
Transformer high voltage side rated voltage UN1	145 kV ±9 · 1.67 % (with on load tap changer)
Transformer low voltage side rated voltage UN2	22 kV
Transformer vector group	YNd11
Transformer impedance voltage at tap changer mid point: ek	12 %
Maximum allowed continuous overload	1.30 · SN
Phase CT ratio at 145 kV level	300/1 A
CT at 145 kV earth point	300/1 A
Phase CT ratio at 22 kV level	2 000/1 A
22 kV VT ratio	$\frac{22}{\sqrt{3}} / \frac{0.11}{\sqrt{3}} / \frac{0.11}{3}$ kV
High positive sequence source impedance at the HV side	j10 Ω (about 2 100 MVA)
Low positive sequence source impedance at the HV side	j3.5 Ω (about 6 000 MVA)
Table continues on next page	

Item	Data
High zero sequence source impedance at the HV side	j20 Ω
Low zero sequence source impedance at the HV side	j15 Ω
Positive sequence source impedance at the LV side	∞ (no generation in the 22 kV network)

Only settings that need adjustment due to the specific application are described in setting examples. It is recommended to keep the default values for all settings that are not described. Refer to Technical manual for setting tables for each protection and control function.

Refer to setting guideline section in Application manual for guidelines on how to set functions that are not presented in setting examples.

Use parameter setting tool in PCM600 to set the IED according to calculations for the particular application.

3.1.1 Calculating general settings for analogue inputs 8I 2U

The analogue input has the capability of 8 current inputs (1 A) and 2 voltage inputs.

The 145 kV current CTs (three phase current transformer group) are connected to inputs 1 – 3 (L1, L2, L3).

The 22 kV current CTs (three phase current transformer group) are connected to inputs 4 – 6 (L1, L2, L3).

The 145 kV neutral point CT is connected to input 7 (IN).

The input 8 is not used. The input is used for connection of low voltage side CT (not in this application)

The 22 kV phase-to-phase (L1 – L2) VT is connected to input 9.

The 22 kV open delta connected VT (residual voltage) is connected to input 10.

1. Set the 145 kV current transformer input 1.
   1.1. Set *CTStarPoint1* to *ToObject*

(The CT secondary is earthed towards the protected transformer)

1.2. Set *CTSec1* to *1 A*
(The rated secondary current of the CT)

1.3. Set *CTPrim1* to *300 A*
(The rated primary current of the CT)

2. Set current inputs 2 and 3 to the same values as for current input 1.
3. Set the 22 kV current transformer input 4.

3.1. Set *CTStarPoint4* to *ToObject*
(The CT secondary is earthed towards the protected transformer)

3.2. Set *CTSec4* to *1 A*
(The rated secondary current of the CT)

3.3. Set *CTPrim4* to *2000 A*
(The rated primary current of the CT)

4. Set current inputs 5 and 6 to the same values as for current input 4.
5. Set the 145 kV neutral point current transformer input 7.

5.1. Set *CTStarPoint7* to *ToObject*
(The CT secondary is earthed towards the protected line)

5.2. Set *CTSec7* to *1 A*
(The rated secondary current of the CT)

5.3. Set *CTPrim7* to *300 A*
(The rated primary current of the CT)

Current input 8 is intended for connection of a low voltage side neutral point CT. In this application the input is not used.

6. Set the voltage transformer inputs 9 and 10.

6.1. Set *VTSec9* to *110 V*
(The rated secondary voltage of the VT, given as phase-phase voltage)

6.2. Set *VTPrim9* to *22 kV*
(The rated secondary voltage of the VT, given as phase-phase voltage)

6.3. Set *VTSec10* to *110 V/√3*
(The rated secondary voltage of the VT, given as phase-phase voltage)

6.4. Set *VTPrim10* to *22 kV*
(The rated secondary voltage of the VT, given as phase-phase voltage)

3.1.2 Calculating settings for global base values GBASVAL

Each function uses primary base values as a reference for the settings. The base values are defined in Global base values for setting GBASVAL function. It is possible to include up to GBASVAL function. In this application GBASVAL instance 1 is used to define the base for 145 kV inputs and GBASVAL instance 2 for 22 kV inputs.

For transformer protection it is recommended to set the base parameters according to the power transformer primary rated values:

1. Set Global Base 1
   1.1. Set *IBase* to *239 A*
   1.2. Set *UBase* to *145 kV*
   1.3. Set *SBase* to *60 MVA* (*SBase*=√3·*UBase*·*IBase*)
2. Set Global Base 2
   2.1. Set *IBase* to *1575 A*
   2.2. Set *UBase* to *22 kV*
   2.3. Set *SBase* to *60 MVA* (*SBase*=√3·*UBase*·*IBase*)

There are six instances of global base GBASVAL function, each instance includes the three parameters: *IBase*, *UBase*, *SBase*. The *GlobalBaseSel* setting which can be found in the different IED functions references a specific instance of the GBASVAL function.

3.1.3 Calculating settings for transformer differential protection T2WPDIF

1. Set *GlobalBaseSelW1* to *1* (HV)
2. Set *GlobalBaseSelW2* to *2* (LV)
   To relate the function settings to the rated data of the transformer, the two windings should be referenced to *GlobalBaseSelW1* and *GlobalBaseSelW2* 1 (HV-side) and 2 (LV-side).
3. Set the vector group of the transformer
   3.1. Set *ConnectTypeW1* to *WYE (Y)*
   3.2. Set *ConnectTypeW2* to *Delta (D)*
   3.3. Set *ClockNumberW2* to *11 [30 deg lead]*
4. Set system residual current elimination
   4.1. Set *ZSCurrSubtrW1* to *On*
   4.2. Set *ZSCurrSubtrW2* to *Off*

   The transformer is solidly earthed at the 145 kV side. In case of an earth-fault in the 145 kV system residual current flows from the transformer. This residual current is seen as a differential current. To prevent an unwanted trip during an external earth-fault the zero sequence current shall be eliminated from the measured transformer current. Since zero sequence currents can not flow in a delta winding this elimination is only needed for the solidly earthedY winding.
5. Set *I2/I1Ratio* to *15 %* (default)

When the transformer is energized an inrush current occurs. This current is seen as a differential current. With a combination of the second harmonic restraint and the waveform restraint methods it is possible to get a protection with high security and stability against inrush effects and at the same time maintain high performance in case of heavy internal faults even if the current transformers are saturated. Both these restraint methods are used. It is recommended to use the parameter *I2/I1Ratio = 15%* as the default value in case no special reasons exist to choose a different value.

6. Set *I5/I1Ratio* to *25 %* (default)
   When the transformer is overexcited due to high voltage and/or low network frequency, the excitation current increases significantly. This current is seen as a differential current. The differential protection function is provided with a fifth harmonic restraint to prevent the protection from operation during an overexcitation condition of the power transformer. It is recommended to use the parameter *I5/I1Ratio = 25%* as the default value in case no special reasons exist to choose a different value.
7. Set *CrossBlockEn* to *On*
   If any of the above mentioned restrain functions (waveform restrain, second harmonic restrain or fifth harmonic restrain) is activated in one phase, cross-blocking can be used to prevent operation of the differential protection in the other phases as well. It is recommended to set the cross-blocking on.
8. Set restrain characteristics
   8.1. Set *EndSection1* to *1.25 IBase*
   8.2. Set *EndSection2* to *3 IBase*
   8.3. Set *SlopeSection2* to *40 %*
   8.4. Set *SlopeSection3* to *80 %*

   The characteristic of the restrained and unrestrained differential protection is shown in figure 10. The differential current limit for operation of the protection is shown as a function of the restrain current. The restrain current is equal to the highest transformer phase current. The restrain characteristic is defined by the parameters: *IdMin*, *EndSection1*, *EndSection2*, *SlopeSection2* and *SlopeSection3*. The settings of *EndSection1*, *EndSection2*, *SlopeSection2* and *SlopeSection3* are defined as advanced parameters and the default values are recommended.

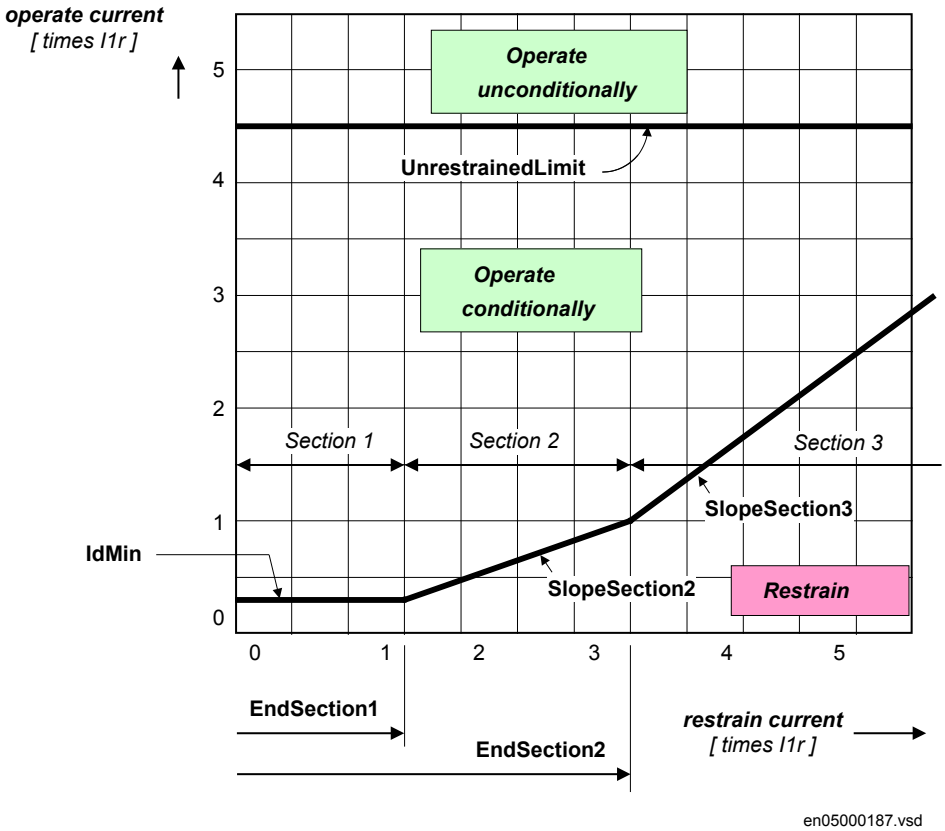

Figure 10: Transformer differential protection operation characteristic

9. Set *IdMin* to ≥*0.3 IBase*
   During normal operation there is a ”false” differential current measured by the protection due to the following:
   - Deviation tap changer position compared to the nominal transformer ratio
   - Difference in current transformer error

   The measured differential current with the tap changer position in the extreme positions can be calculated:
   - At the tap position giving the lowest LV voltage the transformer ratio is 166.8/22 kV. At 1.25 times the rated power (*EndSection1*) the 145 kV current is:

$$I_{HV} = \frac{1.25 \cdot 60}{\sqrt{3} \cdot 166.8} = 0.260\ kA$$

(Equation 1)

This corresponds to 1.088 times the rated current. The low voltage side current is 1.25 times the rated current and thus the differential current is about 0.16 times the rated transformer current.

- At the tap position giving the highest LV voltage the transformer ratio is 123.2/22 kV. At 1.25 times the rated power (*EndSection1*) the 145 kV current is:

$$I_{HV} = \frac{1.25 \cdot 60}{\sqrt{3} \cdot 123.2} = 0.352\ kA$$

(Equation 2)

This corresponds to 1.471 times the rated current. The low voltage side current is 1.25 times the rated current and thus the differential current is about 0.22 times the rated transformer current.
The current transformers class is 5P which gives a maximum amplitude error of circa 1 %. The IED accuracy is given as circa 5% at nominal values to assure that the load current does not cause unwanted operation *IdMin* is set to 0.30 times the rated transformer current.

10. Set *IdUnre* to *10.0 IBase*
The unrestrained differential protection function operates without any stabilization. The setting principle is that the unrestrained function shall only be able to detect internal faults. This means that the current setting shall be larger than the largest fault current through the transformer during external faults. A very simple way to estimate this current is as:

$$IdUnre \geq \frac{1}{e_k} \cdot IBase = \frac{1}{0.12} \cdot IBase = 8.33 \cdot IBase$$

(Equation 3)

If instead the feeding network is considered and a three-phase-fault at the low voltage side of the transformer is calculated, the following current results through the transformer (145 kV level):

$$I = \frac{145}{\sqrt{3} \cdot (Z_{net} + Z_T)} = \frac{145}{\sqrt{3} \cdot (3.5 + \frac{145^2}{60} \cdot 0.12)} = 1.83\ kA$$

(Equation 4)

This corresponds to 7.6 times the transformer rated current. If we consider 80% saturation the differential current will approximately be 0.8 * 1.83kA = 1.464kA. An additional safety margin of 1.2 is chosen. The setting of *IdUnr* should then comply with the following formula with respect to the performed calculations:

$$IdUnr >= 1.2 \cdot 0.8 \cdot \frac{1.83kA}{239} = 7.4 \cdot IBase$$

(Equation 5)

11. Set *NegSeqDiffEn*, *IMinNegSeq* and *NegSeqROA*

11.1. Set *NegSeqDiffEn* to *On* (default)
11.2. Set *IMinNegSeq* to *>0.04 IBase* (default)
11.3. Set *NegSeqROA* to *60°* (default)

The transformer differential protection has external/internal fault discriminator function, based on negative sequence current. The settings of

NegSeqDiffEn, *IMinNegSeq* and *NegSeqROA* are defined as advanced parameters and the default values are recommended.

3.1.4 Calculating settings for restricted earth fault protection REFPDIF

The restricted earth fault protection is applied to the solidly earthed 145 kV winding as shown in figure 11.

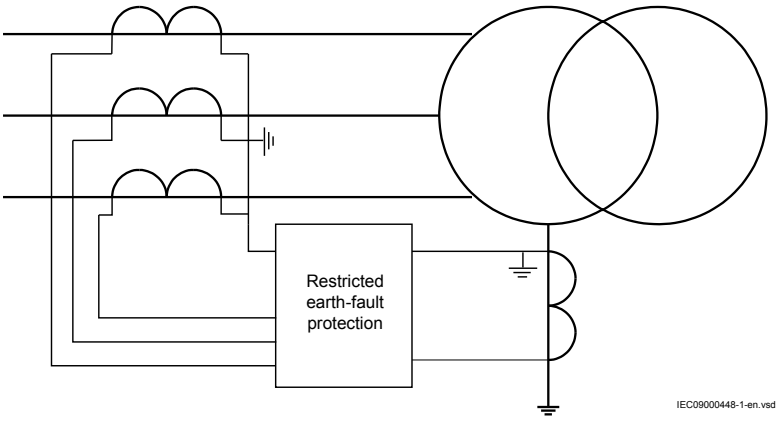

Figure 11: Restricted earth fault protection application

1. Set *GlobalBaseSel* to *1*.
   The (HV) winding data should be related to Global base 1
2. Set *IdMin* to *30 %* of *IBase*

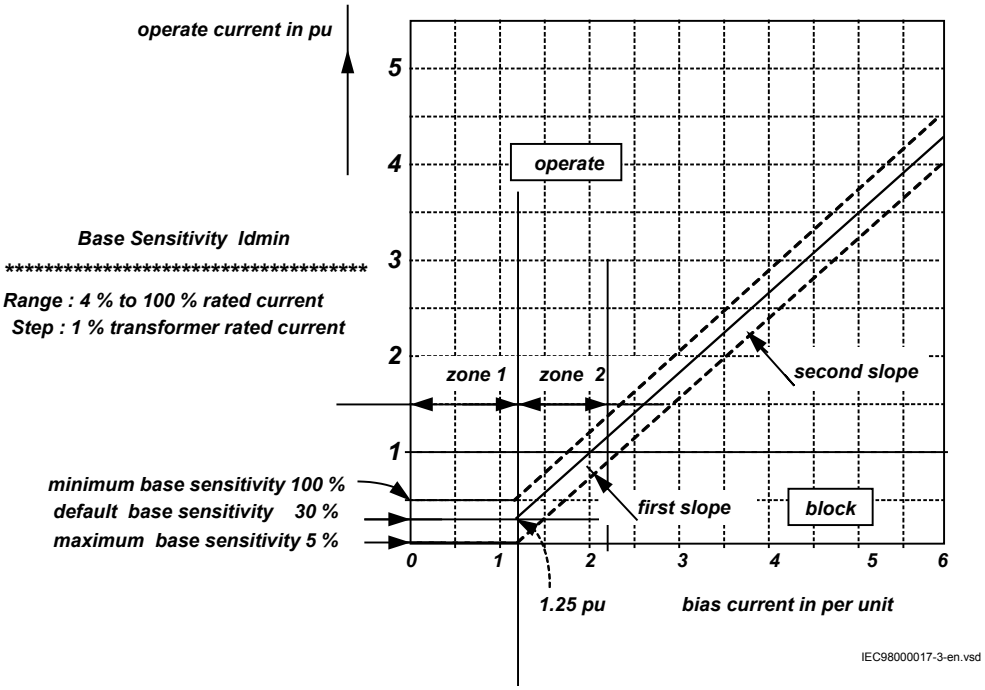

Figure 12: Restricted earth fault protection trip characteristic

The operate characteristic is shown in figure 12. The only setting to be made is to set *IdMin*. The default value is 30 % of *IBase*. This setting is recommended.

3.1.5 Calculating settings for instantaneous phase overcurrent protection, HV-side, PHPIOC

1. Set *GlobalBaseSel* to 1
   The (HV) winding data should be related to Global base 1.
2. Set *IP>>* to *1000 %* of *IBase*
   The instantaneous phase overcurrent protection on the high voltage side is used for fast trip ping during severe internal faults. The protection shall be selective with respect to the protections of the outgoing 22 kV feeders. Therefore the maximum 145 kV current during a three-phase short circuit on the 22 kV side of the transformer is calculated:

$$I = \frac{145}{\sqrt{3} \cdot (Z_{net} + Z_T)} = \frac{145}{\sqrt{3} \cdot (3.5 + \frac{145^2}{60} \cdot 0.12)} = 1.83\ kA$$

(Equation 6)

The dynamic overreach, due to fault current DC-component, shall be considered in the setting. This factor is less that 5 %. The setting is chosen with a safety margin of 1.2:

$I_{set} \geq 1.2 \cdot 1.05 \cdot 1\,830 = 2\,306$ A
Setting*IP>>* = *1000 %* of *IBase*

3.1.6 Calculating settings for four step phase overcurrent protection 3-phase output, HV-side, OC4PTOC

The phase overcurrent protection is difficult to set as the short circuit current is highly dependent of the switching state in the power system as well as the fault type. In order to achieve setting that assure a selective fault clearance, a large number of calculations have to be made with different fault locations, different switching states in the system and different fault types.

The 145 kV phase overcurrent protection has the following tasks:

- Backup protection for short circuits on the transformer
- Backup protection for short circuits on 22 kV busbar
- Backup protection for short circuits on outgoing 22 kV feeders (if possible)

Although it is possible to make hand calculations of the different faults it is recommended to use computer based fault calculations.

The following principle for the phase overcurrent protection is proposed:

- Only one step (step 1) is used. The time delay principle is chosen according to network praxis, in this case inverse time characteristics using IEC Normal inverse.

3.1.6.1 Calculating general settings

1. Set *GlobalBaseSel* to *1*
   For the (HV) winding data should be related to Global base 1
2. Set *DirMode1* to *Non-directional*
   The function shall be non-directional
3. Set *Characterist1* to *IEC Norm.inv.*
   For the choice of the time delay characteristic IEC Normal inverse is used in this network.

3.1.6.2 Calculating settings for step 1

1. Set *I1>* to *140%* of *IBase* (334 A primary current)

The first requirement is that the phase overcurrent protection shall never trip for load current during the extreme high load situations. It is assumed that the transformer shall be able to be operated up to 130 % of the rated power during limited time. The protection resetting ratio shall be considered as well. The reset ratio is 0.95. The minimum setting can be calculated as:

$$I_{pu} \geq 1.3 \cdot \frac{1}{0.95} \cdot \frac{60 \cdot 1000}{\sqrt{3} \cdot 145} = 327\ A$$

(Equation 7)

The next requirement is that the protection shall be able to detect all short circuits within the defined protected zone. In this case it is required, if possible, that the protection shall detect phase-to-phase short circuit at the most remote point of the outgoing feeders as shown in figure 13.

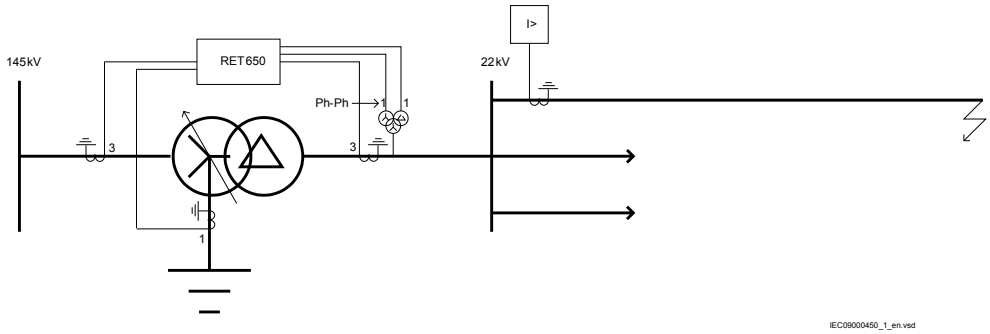

Figure 13: Fault calculation for phase overcurrent protection setting

A phase-phase-earth short circuit is applied. In this calculation the short circuit power of the feeder shall be minimized (the source impedance maximized).
The longest 22 kV feeder has an impedance of Z = 3 + j10 Ω. The external network has a maximum source impedance of Z_{sc} = j10 Ω (145 kV level). This impedance is transformed to the 22 kV level:

$$Z_{sc,22} = \left(\frac{22}{145}\right)^2 \cdot j10 = j0.23\ \Omega$$

(Equation 8)

The transformer impedance referred to 22 kV level is:

$$Z_{T,22} = j\frac{22^2}{60} \cdot 0.12 = j0.97\ \Omega$$

(Equation 9)

The fault current can be calculated as follows:

$$I_{sc2ph} = \frac{\sqrt{3}}{2} \cdot \left| \frac{22000/\sqrt{3}}{j0.23 + j0.97 + 3 + j10} \right| = 948\ A$$

(Equation 10)

This fault current is recalculated to the 145 kV level:

$$I_{sc2ph,145} = \frac{22}{145} \cdot 948 = 144\ A$$

(Equation 11)

This current is smaller than the required minimum setting to avoid an unwanted trip when experiencing a large load current. This means that the 145 kV phase overcurrent protection cannot serve as complete back-up protection for the outgoing 22 kV feeders.

2. Set *k1* to *0.15*
   The time setting must be coordinated with the feeder protections to assure selectivity. It can be stated that there is no need for selectivity between the high voltage side phase overcurrent protection and the low voltage side phase overcurrent protection.
   The feeder short circuit protections have the following setting:
   I>: 300 A which corresponds to 45 A on 145 kV level.
   I>>: 6 000 A which corresponds to 910 A on 145 kV level.
   Characterist: IEC Normal Inverse (*IEC Norm. inv.*) with k-factor = 0.25
   The setting of the k-factor for the 145 kV phase overcurrent protection is derived from graphical study of the inverse time curves. It is required that the smallest time difference between the inverse time curves shall be 0.4 s. With the setting *k1* = 0.15 the time margin between the characteristics is about 0.4 s as shown in figure 14.

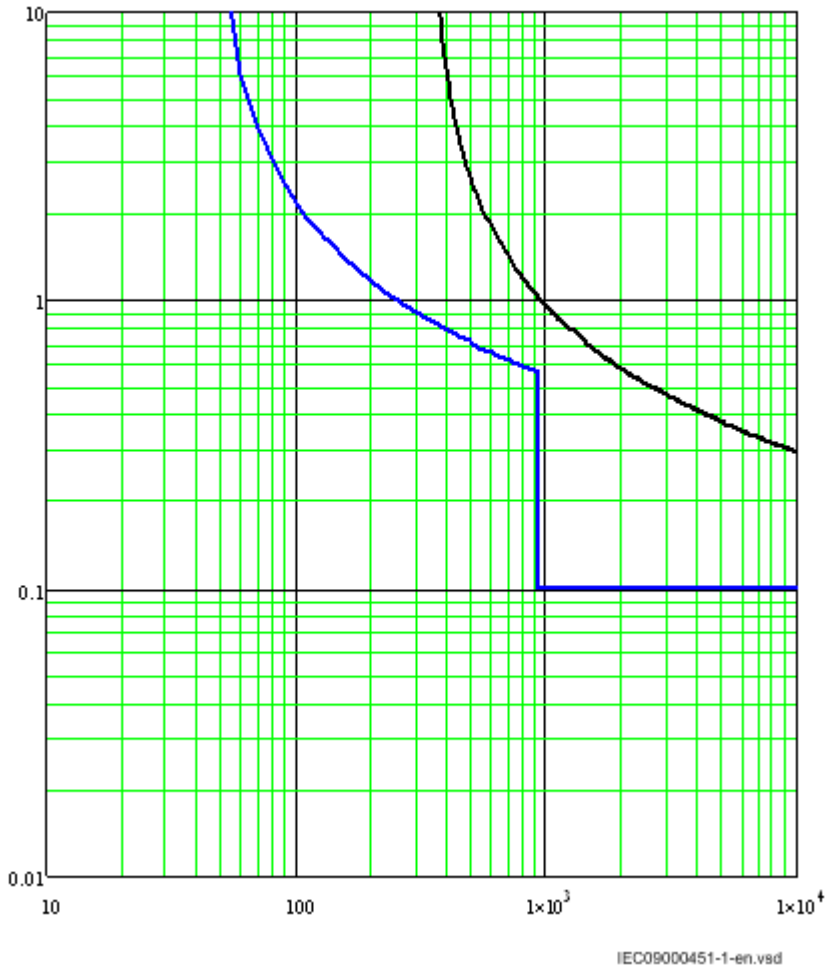

Figure 14: Inverse time operation characteristics for selectivity

3.1.7 Calculating settings for four step phase overcurrent protection 3-phase output, LV-side OC4PTOC

The 22 kV phase overcurrent protection has the following purpose:

- Main protection for short circuits on 22 kV busbar
- Backup protection for short circuits on outgoing 22 kV feeders (if possible)

The reach of the phase overcurrent line protection is dependent on the operation state and the fault type. Therefore the setting must be based on fault calculations made for different faults, fault points and switching states in the network. Although it is possible to make manual calculations of the different faults it is recommended to use computer based fault calculations.

The following principle for the phase overcurrent protection is proposed:

- Step 1 serves as the main protection for the 22 kV busbar. This step has a short delay and also has blocking input from the phase overcurrent protections of the 22 kV feeders. This is a way to achieve a fast trip of 22 kV busbar short circuits while the selectivity is realized by means of the blocking from the feeder protections.
- Step 4 is used as back-up short circuit protection for the 22 kV feeders as far as possible. The time delay principle is chosen according to network praxis, in this case inverse time characteristics using IEC Normal inverse. As the step shall have an inverse time characteristic the step 4 function is used.

An inverse time characteristics is not available for step 2 and 3.

3.1.7.1 Calculating general settings

1. Set *GlobalBaseSel* to *2*
   The settings are made in primary values. These values are given in the base settings in Global base 2.
2. Set directional mode
   2.1. Set *DirMode1* to *Non-directional*
   2.2. Set *DirMode4* to *Non-directional*

   The function shall be non-directional.
3. Set *Characterist1* to *IEC Def.Time*
   Step 1 shall have definite time delay
4. Set *Characterist4* to *IEC Norm.inv*
   Step 4: For the choice of the time delayed characteristic IEC Normal inverse is used in this network.

3.1.7.2 Calculating settings for step 1

1. Set *I1>* to *500 %* of *IBase*
   The requirement is that step 1 shall detect all short circuits on the 22 kV busbar. The external network has a maximum source impedance of Z_{sc} = j10 Ω (145 kV level). This impedance is transformed to 22 kV level:

$$Z_{sc,22} = \left(\frac{22}{145}\right)^2 \cdot j10 = j0.23\,\Omega$$

(Equation 12)

The transformer impedance, referred to 22 kV level, is:

$$Z_{T,22} = j\frac{22^2}{60} \cdot 0.12 = j0.97\,\Omega$$

(Equation 13)

Calculation of a phase-to-phase short circuit at this busbar:

$$I_{sc2ph} = \frac{\sqrt{3}}{2} \cdot \left| \frac{22000/\sqrt{3}}{j0.23 + j0.97} \right| = 9167\ A$$

(Equation 14)

The setting is chosen to 5 *IBase* which corresponds to 7 875 A primary current.

2. Set *t1* to *0.1 s*
   The time delay must be chosen so that the blocking signal shall be able to prevent unwanted operation during feeder short circuits. 0.1 s should be sufficient.

3.1.7.3 Calculating settings for step 4

The first requirement is that the phase overcurrent protection shall never trip for load current during extreme high load situations. It is assumed that the transformer shall be able to be operated up to 130% of the rated power during the limited time. The protection resetting ratio of 0.95 shall also be considered. The minimum setting can be calculated as follows:

$$I_{pu} \geq 1.3 \cdot \frac{1}{0.95} \cdot \frac{60 \cdot 1000}{\sqrt{3} \cdot 22} = 2155\ A$$

(Equation 15)

The next requirement is that the protection shall be able to detect all short circuits within the defined protected zone. In this case it is required, if possible, that the protection shall detect phase-to-phase short circuit at the most remote point of the outgoing feeders as shown in figure 15.

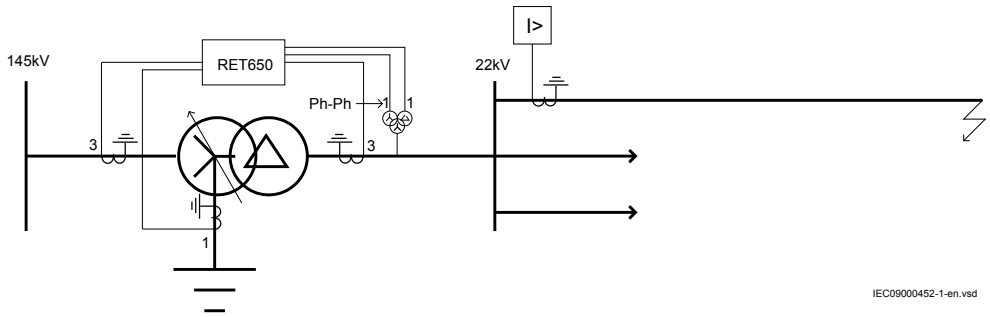

Figure 15: Fault calculation for phase overcurrent protection

A phase-phase-earth short circuit is applied. In this calculation the short circuit power of the feeder shall be minimized (the source impedance maximized).

1. Set *I2>* to *140 %* of *IBase*
   2205 A primary current.
   The longest 22 kV feeder has an impedance of Z = 3 + j10 Ω. The external network has a maximum source impedance of Zsc = j10 Ω (145 kV level). This impedance is transformed to the 22 kV level:

$$Z_{sc,22} = \left(\frac{22}{145}\right)^2 \cdot j10 = j0.23\,\Omega$$

(Equation 16)

The transformer impedance, referred to 22 kV level is:
The phase-to-phase fault current can be calculated as follows:

$$I_{sc2ph} = \frac{\sqrt{3}}{2} \cdot \left| \frac{22000/\sqrt{3}}{j0.23 + j0.97 + 3 + j10} \right| = 949\ A$$

(Equation 17)

This current is smaller than the required minimum setting to avoid unwanted trip at large load current. This means that the 22 kV phase overcurrent protection cannot serve as complete back-up protection for the outgoing 22 kV feeders.

2. Set *k4* to *0.15*
   The feeder short circuit protections has the following setting:
   I>: 300 A.
   I>>: 6 000 A.
   Characteristic: IEC Normal Inverse with k-factor = 0.25
   The setting of the k-factor for the 22 kV phase overcurrent protection is derived from graphical study of the inverse time curves. It is required that the smallest time difference between the inverse time curves is 0.4 s. With the setting *k4*= 0.15 the time margin between the characteristics is about 0.4 s as shown in figure 16.

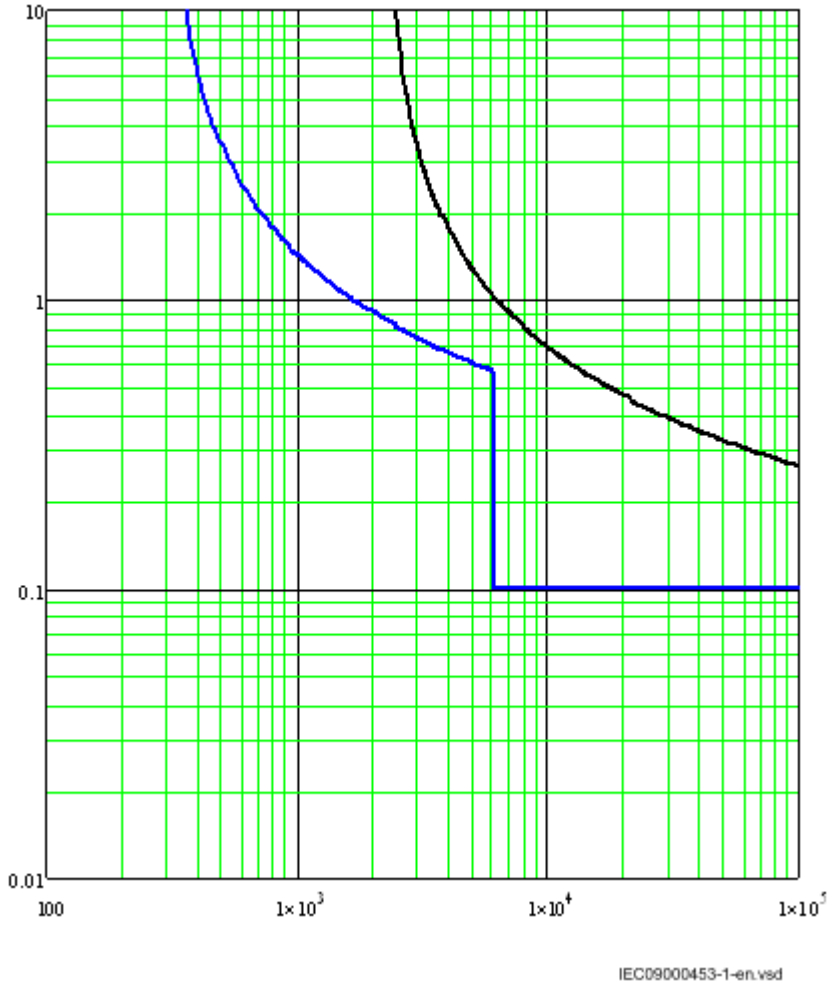

Figure 16: Inverse time operation characteristics for selectivity

3.1.8 Calculating settings for four step residual overcurrent protection, zero or negative sequence direction HV-side EF4PTOC

The protection is fed from the 145 kV neutral point of the current transformer.

The residual overcurrent protection is more difficult to set as the earth-fault current is highly dependent on the network configuration of the power system. In order to achieve settings that assure selective fault clearance, a large number of calculations have to be made with different fault locations, different switching states in the system and different earth-fault types. Below one example of setting of residual overcurrent protection for a line in a meshed solidly earthed system is given.

If there is no generation at the low voltage side of the generator the transformer can only feed earth-fault currents as long as any of the non faulted lines are still in operation. If there is generation connected to the low voltage side of the transformer the transformer can only feed 145 kV earth-faults.

The residual overcurrent protection has the following purpose:

- Fast and sensitive protection for earth-faults on the 145 kV busbar
- Backup protection for earth-faults in the 145 kV transformer winding
- Backup protection for earth-faults on the outgoing 145 kV lines
- Sensitive detection of high resistive earth-faults and series faults in the 145 kV network

The reach of the residual overcurrent line protection is dependent on the operation state and the fault type. Therefore the setting must be based on fault calculations made for different faults, fault points and switching states in the network. Although it is possible to make hand calculations of the different faults it is recommended to use computer based fault calculations.

The following principle for the residual overcurrent protection is proposed:

- Step 1 (*IN1>*) with a high current setting and a short delay (about 0.4 s). Step 1 is a non-directional function. This step gives a fast trip for busbar earth-faults and some earth-faults on the lines.
- Step 2 (*IN2>*) with a current setting, if possible, that enables detection of earth-faults on the 145 kV lines out from the substation. Step 2 is a non-directional function. The function has a delay to enable selectivity with respect to the line protections.
- Step 4 (*IN4>*) with a current setting that enables detection of high resistive earth-faults and series faults in the network. Step 3 is a non-directional function. The function has a longer delay to enable selectivity.

3.1.8.1 Calculating general settings

The (HV) winding data should be related to Global base 1.

1. Set *GlobalBaseSel* to *1*, *IBase* = 240 A
2. Set *DirMode1*, *DirMode2* and *DirMode4* to *Non-directional*
3. Set *DirMode3* to *Off*

3.1.8.2 Calculating settings for step 1

Set the operating residual current level and time delay

1. Set *IN1>* to *689%* of *IBase*, corresponding to 1650 A

Faults are applied at the 145 kV busbar as shown in figure 17.

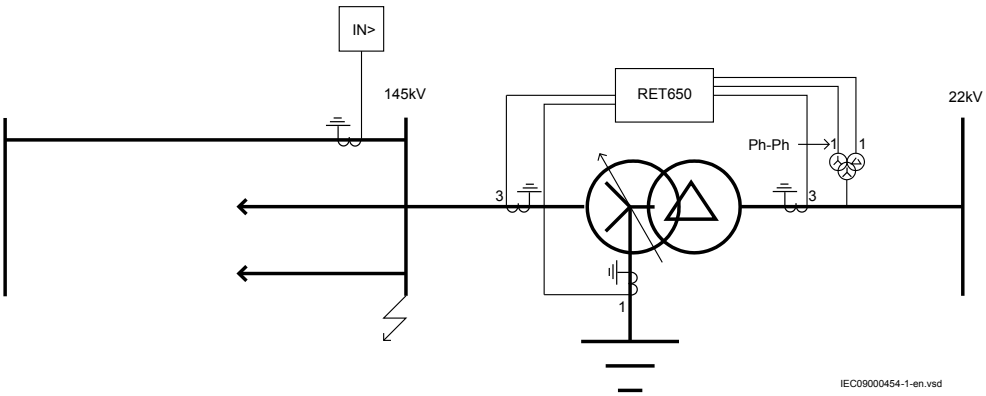

Figure 17: Fault calculation for 145 kV residual overcurrent protection setting

The following fault types are applied: phase-phase-earth short circuit and phase-earth-fault. The source impedance (both positive sequence and zero sequence) at the 145 kV level gives the following residual current from the transformer during a phase-to-earth busbar fault (the current is hand-calculated but is normally calculated in a computer).
The zero sequence transformer impedance is assumed to be equal to the positive sequence short circuit impedance:

$$Z_{0T} = j\frac{U_N^2}{S_N} \cdot e_k = j\frac{145^2}{60} \cdot 0.12 = j42\ \Omega$$

(Equation 18)

The residual current from the transformer during a single phase-earth-fault and with maximum short circuit power is:

$$3I_{0T} = \frac{Z_{0,net}}{Z_{0,net} + Z_{0T}} \cdot \frac{\sqrt{3} \cdot U}{2 \cdot Z_{1,net} + \frac{Z_{0,net} \cdot Z_{0T}}{Z_{0,net} + Z_{0T}}} = \frac{j15}{j15 + j42} \cdot \frac{\sqrt{3} \cdot 145}{2 \cdot j3.5 + \frac{j15 \cdot j42}{j15 + j42}} = 3.7\ kA$$

(Equation 19)

The residual current from the transformer during a single phase-earth-fault and with minimum short circuit power is:

$$3I_{0T} = \frac{Z_{0,net}}{Z_{0,net} + Z_{0T}} \cdot \frac{\sqrt{3} \cdot U}{2 \cdot Z_{1,net} + \frac{Z_{0,net} \cdot Z_{0T}}{Z_{0,net} + Z_{0T}}} = \frac{j20}{j20 + j42} \cdot \frac{\sqrt{3} \cdot 145}{2 \cdot j10 + \frac{j20 \cdot j42}{j20 + j42}} = 2.4\ kA$$

(Equation 20)

The residual current from the transformer during a phase-to-phase to earth-fault and with maximum short circuit power is:

$$3I_{0T} = \frac{Z_{0,net}}{Z_{0,net} + Z_{0T}} \cdot \frac{\sqrt{3} \cdot U}{Z_{1,net} + 2 \cdot \frac{Z_{0,net} \cdot Z_{0T}}{Z_{0,net} + Z_{0T}}} = \frac{j15}{j15 + j42} \cdot \frac{\sqrt{3} \cdot 145}{j3.5 + 2 \cdot \frac{j15 \cdot j42}{j15 + j42}} = 2.6\ kA$$

(Equation 21)

The residual current from the transformer during a phase-to-phase to earth-fault and with minimum short circuit power is:

$$3I_{0T} = \frac{Z_{0,net}}{Z_{0,net} + Z_{0T}} \cdot \frac{\sqrt{3} \cdot U}{Z_{1,net} + 2 \cdot \frac{Z_{0,net} \cdot Z_{0T}}{Z_{0,net} + Z_{0T}}} = \frac{j20}{j20 + j42} \cdot \frac{\sqrt{3} \cdot 145}{j10 + 2 \cdot \frac{j20 \cdot j42}{j20 + j42}} = 2.2\ kA$$

(Equation 22)

To assure that the protection detects all earth-faults on the 145 kV busbar the protection should be set as follows:
IN1> ≤ *0.75 · 2.2 = 1.65 kA* = 687 % *IBase*

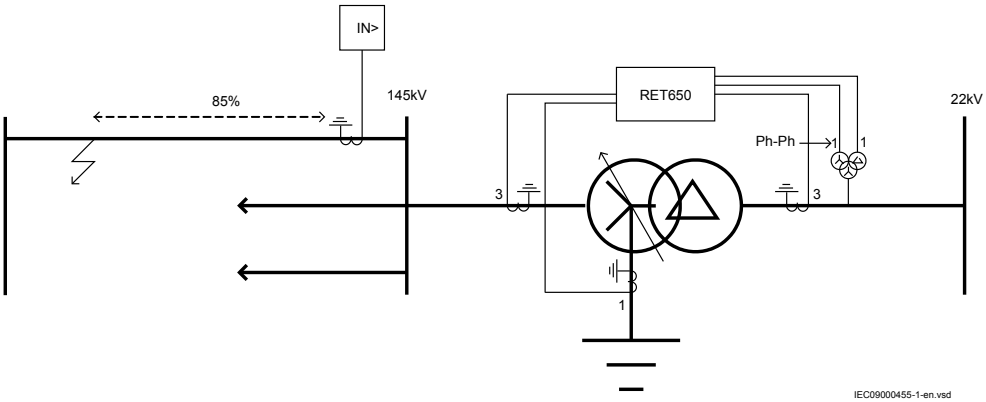

Figure 18: Fault calculation for 145 kV residual overcurrent protection selectivity

The calculations show that the largest residual current from the transformer = 1.2 kA.
To assure selectivity the setting must fulfil:
$I_{high,set} \geq 1.2 \cdot k \cdot 3I_{0\ max}$
which gives about 1 500 A ,where k is the transient overreach (due to the fault current DC-component) of the overcurrent function. For the four step residual overcurrent function; k = 1.05.

2. Set *t1* to *0.4 s*
   Characterist1: *ANSI Def.Time*
   As the protection should be set for a time delay of 0.4 s the selectivity to the line protections should be assured. Therefore earth-faults should be calculated where the fault point on the lines is at zone 1 reach (about 85 % out on the line).

3.1.8.3 Calculating settings for step 2

1. Set *IN2>* to *400%* of *IBase*, corresponding to 956 A
   To assure that step 2 detects all earth-faults on the outgoing lines earth-faults calculations are made where single phase-faults and phase-to-phase-to earth-faults are applied to the adjacent busbars.

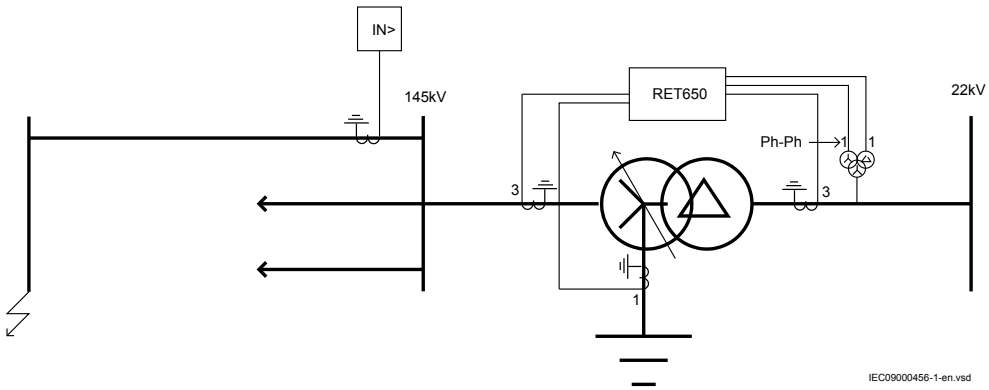

Figure 19: Fault calculation for sufficient reach of the 145 kV residual overcurrent protection

   The minimum residual current to detect works out as $3I_{0AB,min}$ = 1.0 kA.
2. Set *t2* to *0.8 s*
   Characteristic2: *ANSI Def.Time*
   The delay of *IN2>* should be set longer than the distance protection zone 2 (normally 0,4 s). 0.8 s is proposed.

3.1.8.4 Calculating settings for step 4

1. Set *IN4>* to *42 %* of *IBase*, corresponding to 100 A
   The current setting of step 4 should be chosen according to standard procedure in the grid. From experience it can be concluded that a setting down to about 100 A can be used. This setting is however highly dependent on the line configuration, mainly if the line is transposed or not.
   The delay of *IN4>* should be set larger than the delay of the sensitive residual current protection of the lines.
2. Set *k4* to *0.3*
   Characterist4: *RD type*
3. Set *t4Min* to *1.2 s*
4. Set *inverse time delay of type RD* to *logarithmic*
   If definite time delay is used there is some risk of unselective trip during high resistive earth-faults or series faults. If a dependent time delay (inverse time) is used some degree of selectivity can be achieved.
   Here an inverse time delay of the RD type is selected: logarithmic

3.1.9 Calculating settings for two step residual overvoltage protection LV-side, ROV2PTOV

The residual overvoltage protection is fed from the open delta connected voltage transformer at the 22 kV side of the transformer.

The residual overvoltage protection has the following purpose:

- Back-up protection for earth-faults on the 22 kV feeders out from the substation.
- Main protection for earth-faults on the 22 kV busbar
- Main protection for earth-faults on the 22 kV transformer winding

The residual voltage protection has two steps. In this application step 1 should trip the 22 kV circuit breaker and if the earth-fault is situated in the transformer 22 kV winding or between the transformer and the 22 kV breaker the 145 kV breaker is tripped from step 2.

The voltage setting of the protection is dependent on the required sensitivity and the system earthing. The 22 kV system has earthing through a Petersen coil (connected to the system via a separate earthing transformer) and a parallel neutral point resistor. The Petersen coil is tuned to compensate for the capacitive earth-fault current in the 22 kV system. The neutral point resistor gives a 10 A earth-fault current during a zero resistance earth-fault. This means that the resistance is

$$R_N = \frac{22000 / \sqrt{3}}{10} = 1270\ \Omega$$

(Equation 23)

The total zero sequence impedance of the 22 kV system is:

$$Z_0 = 3R_N // j3X_N // — jX_C\ \Omega / phase$$

As the Petersen coil is tuned the zero sequence impedance is:

$$Z_0 = 3R_N\ \Omega / phase$$

The residual voltage during a resistive earth-fault in the 22 kV system is:

$$U_o = \frac{U_{Phase}}{1 + \frac{3 \cdot R_f}{Z_0}}\ or\ \frac{U_0}{U_{phase}} = \frac{1}{1 + \frac{3 \cdot R_f}{Z_0}}$$

(Equation 24)

In our case the requirement is that earth-faults with a resistance up to 5 000 Ω shall be detected. This gives:

$$\frac{U_0}{U_{phase}} = \frac{1}{1 + \frac{3 \cdot 5000}{3 \cdot 1270}} = 0.20$$

(Equation 25)

Step 1 and step 2 is given the same voltage setting but step 2 shall have longer time delay.

The residual earth-fault protection shall have a definite time delay. The time setting is set longer than the time delay of the earth-fault protection of the outgoing feeders having maximum 2 s delay. The time delay for step 1 is set to 3 s and the time delay for step 2 is set to 4 s.

1. Set *GlobalBaseSel* to *2*
   The (LV) winding data should be related to Global base 2.
2. Set *Characterist1* to *Definite time*
3. Set *U1>* to *20 %* of *UBase*
4. Set *t1* to *3.0 s*
5. Set *U2>* to *20 %* of *UBase*
6. Set *t2* to *4.0 s*

3.1.10 Calculating settings for HV-side breaker failure protection, CCRBRF

The breaker failure protection can use either the position indication of the circuit breaker or measure the current going through the CT in order to detect correct breaker functioning. For transformer protections it is most suitable to use current measurement as a circuit breaker failure check.

1. Set *GlobalBaseSel* to *1*
   The (HV) winding data should be related to Global base 1.
2. Set *FunctionMode* to *Current*
3. Set *BuTripMode* to *1 out of 4*
   The current measurement function uses the three-phase currents from the line CT and either, a measured residual current or a calculated 3I0. Based on this analogue data one of the following rules can be chosen in order to determine a breaker failure:
   - *1 out of 3*: at least one of the three-phase current shall be larger than the set level to detect failure to break
   - *1 out of 4*: at least one of the three-phase current and the residual current shall be larger than the set level to detect failure to break
   - *2 out of 4*: at least two of the three-phase current and the residual current shall be larger than the set level to detect failure to break.

   As the residual current protection is one of the protection functions to initiate the breaker failure protection the setting *1 out of 4* is chosen.
4. Set *IP>* to *20 %* of *IBase*
   IP> should be set lower than the smallest current to be detected by the differential protection which is set 30% of *IBase*.
5. Set *IN>* to *20 %* of *IBase*

IN> should be set lower than the smallest current to be detected by the most sensitive step of the residual ovecurrent protection which is 100 A.

6. Set the re-tip time delay *t1* to *0*
7. Set *t2* to *0.17 s*
   The delay time of the breaker failure protection (BuTrip) is chosen according to figure 20.
   The maximum opening time of the circuit breaker is considered to be 100 ms.
   The breaker failure protection BFP maximum reset time is 15 ms.
   A margin of about 2 cycles should be chosen. This gives a minimum setting of back-up trip delay *t2* of about 155ms.

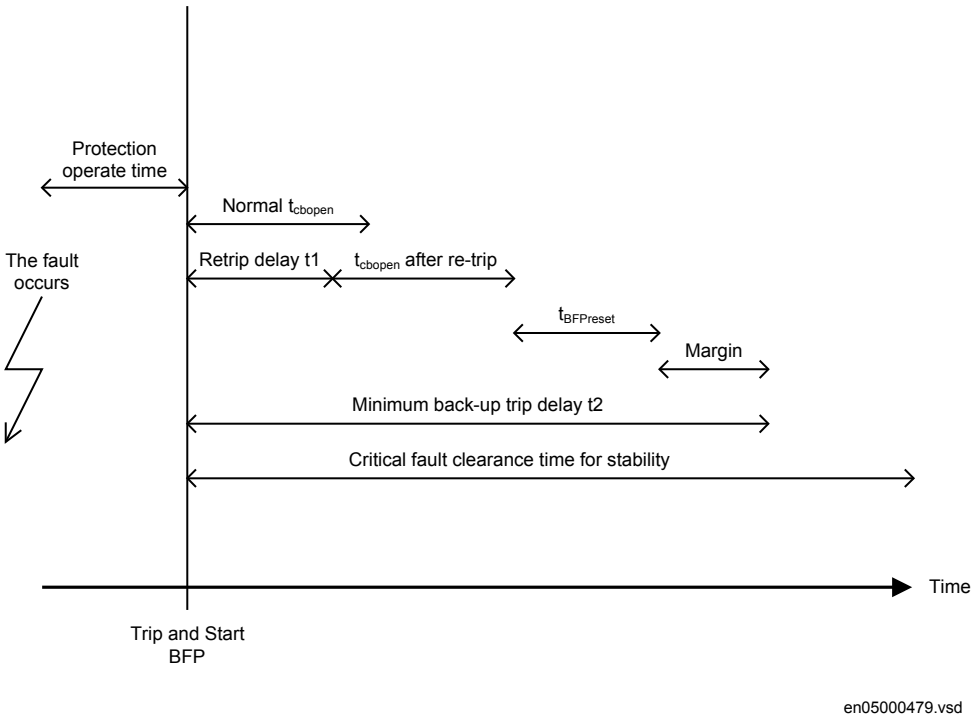

Figure 20: Overexcitation protection characteristics

3.1.11 Calculating settings for LV-side breaker failure protection, CCRBRF

The breaker failure protection can use either the position indication of the circuit breaker or measure the current going through the CT in order to detect correct breaker functioning. For transformer protections it is most suitable to use current measurement as a circuit breaker failure check.

1. Set *GlobalBaseSel* to *2*

The (LV) winding data should be related to Global base 2.

2. Set *FunctionMode* to *Current*
3. Set *BuTripMode* to *1 out of 3*
   The current measurement function uses the three-phase currents from the line CT and either, a measured residual current or a calculated 3I0. Based on this analogue data one of the following rules can be chosen in order to determine a breaker failure:
   - *1 out of 3*: at least one of the three-phase current shall be larger than the set level to detect failure to break
   - *1 out of 4*: at least one of the three-phase current and the residual current shall be larger than the set level to detect failure to break
   - *2 out of 4*: at least two of the three-phase current and the residual current shall be larger than the set level to detect failure to break.

   There is no residual current measurement protection on the 22 kV side of the transformer. Therefore *1 out of 3* is chosen.
4. Set *IP>* to *20 % of IBase*
   IP> should be set lower than the smallest current to be detected by the differential protection which is set 25 % of *IBase*.
5. Set the re-tip time delay *t1* to *0 s*
6. Set *t2* to *0.17 s*
   The delay time of the breaker failure protection (BuTrip) is chosen according to figure 20.
   The maximum open time of the circuit breaker is considered to be 100 ms.
   The BFP maximum reset time is 15 ms.
   A margin of about 2 cycles should be chosen. This gives a minimum setting of back-up trip delay *t2* of about 155ms.

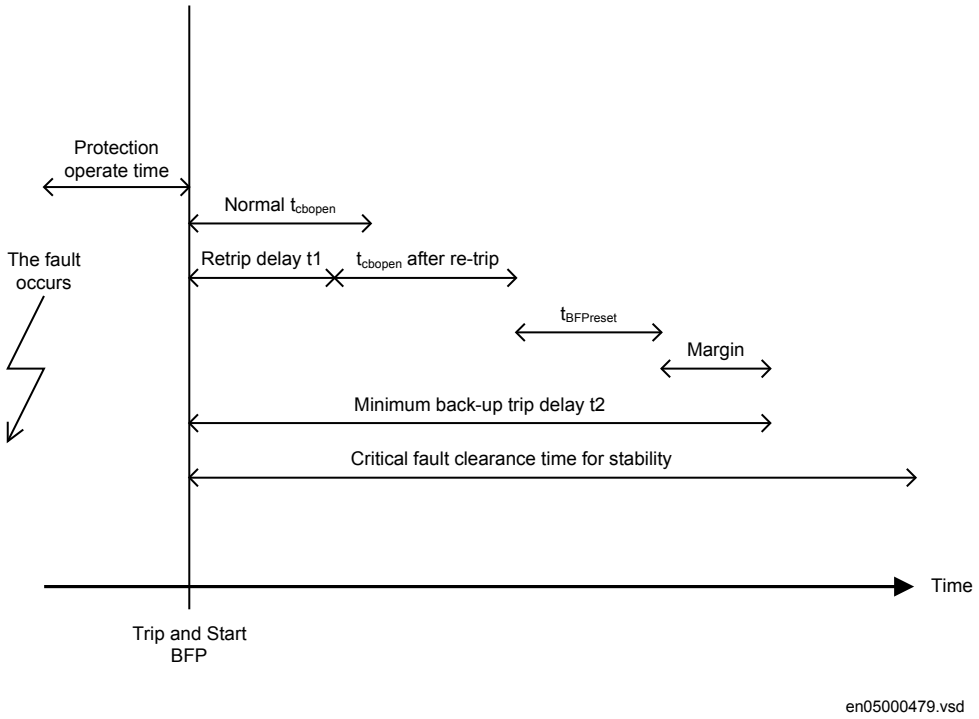

Figure 21: Time sequences for breaker failure protection setting

Section 4 Analog inputs

4.1 Introduction

Analog input channels are already configured inside the IED. However the IED has to be set properly to get correct measurement results and correct protection operations. For power measuring and all directional and differential functions the directions of the input currents must be defined properly. Measuring and protection algorithms in the IED use primary system quantities. Setting values are in primary quantities as well and it is important to set the transformation ratio of the connected current and voltage transformers properly.

The availability of CT and VT inputs, as well as setting parameters depends on the ordered IED.

A reference *PhaseAngleRef* must be defined to facilitate service values reading. This analog channels phase angle will always be fixed to zero degrees and all other angle information will be shown in relation to this analog input. During testing and commissioning of the IED the reference channel can be changed to facilitate testing and service values reading.

4.2 Setting guidelines

4.2.1 Setting of the phase reference channel

All phase angles are calculated in relation to a defined reference. An appropriate analog input channel is selected and used as phase reference. The parameter *PhaseAngleRef* defines the analog channel that is used as phase angle reference.

The initially connected phase-to-earth voltage is usually chosen as *PhaseAngleRef*. A phase-to-phase voltage can also be used in theory, but a 30 degree phase shift between the current and voltage is observed in this case.

If no suitable voltage is available, the initially connected current channel can be used. Although the phase angle difference between the different phases will be firm, the whole system will appear to rotate when observing the measurement functions.

The phase reference does not work if the current channel is not available. For example, when the circuit breaker is opened and no

current flows. Although the phase angle difference between the different phases is firm, the whole system appears to be rotating when the measurement functions are observed.

4.2.2 Setting of current channels

The direction of a current depends on the connection of the CT. Unless indicated otherwise, the main CTs are supposed to be star connected. The IED can be connected with its earthing point towards the object or away from the object. This information must be set in the IED via the parameter *CTStarPoint*, which can be changed between *FromObject* and *ToObject*. Internally in the IED algorithms and IED functions, the convention of the directionality is defined as follows:

A positive value of current, power, and so on (forward) means that the quantity has a direction towards the object. - A negative value of current, power, and so on (reverse) means a direction away from the object. See figure 22.

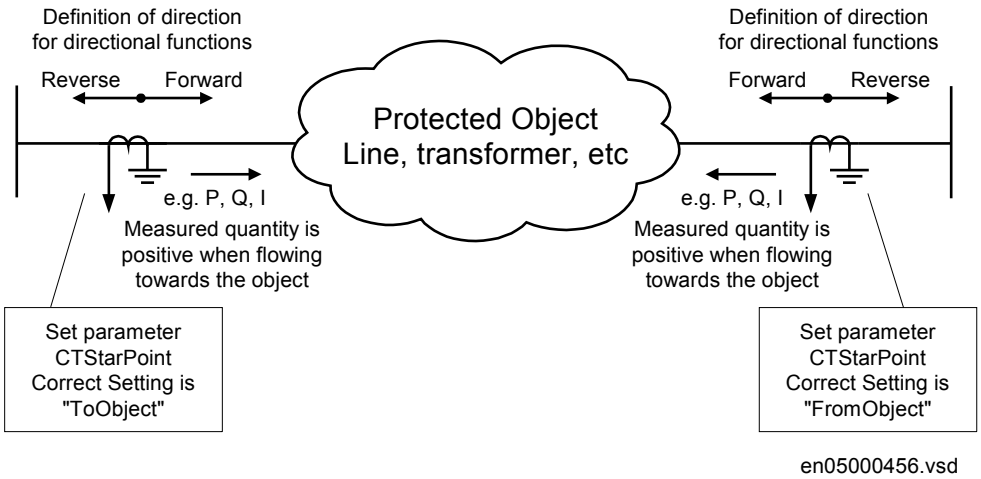

Figure 22: Internal convention of the directionality in the IED

With correct setting of the primary CT direction, *CTStarPoint* set to *FromObject* or *ToObject*, a positive quantity always flows towards the protected object and a direction defined as Forward is always looking towards the protected object. The following examples show the principle.

4.2.2.1 Example 1

Two IEDs used for protection of two objects.

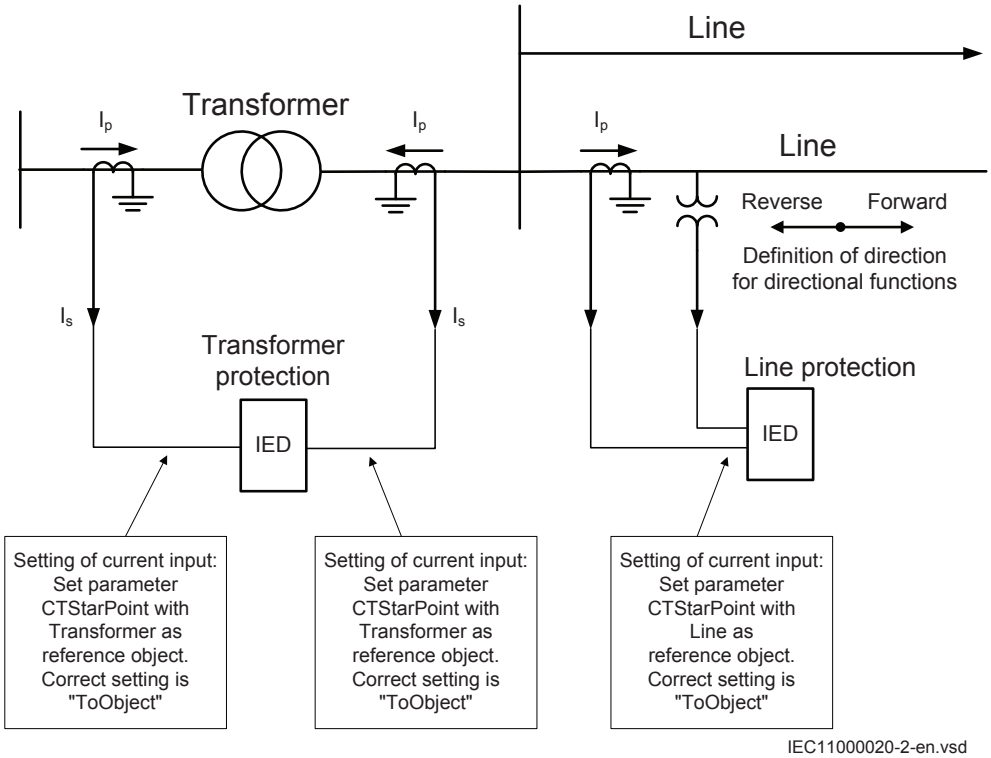

Figure 23: Example how to set CTStarPoint parameters in the IED

The figure 23 shows the most common case where the objects have their own CTs. For the transformer protection, the protected object is the transformer. Therefore both *CTStarPoint* directions should be set *ToObject*. For the line protection, the protected object is the line. The line CT is earthed towards the busbar, therefore the *CTStarPoint* should be set *FromObject*.

4.2.2.2 Example 2

Two IEDs used for protection of two objects and sharing a CT.

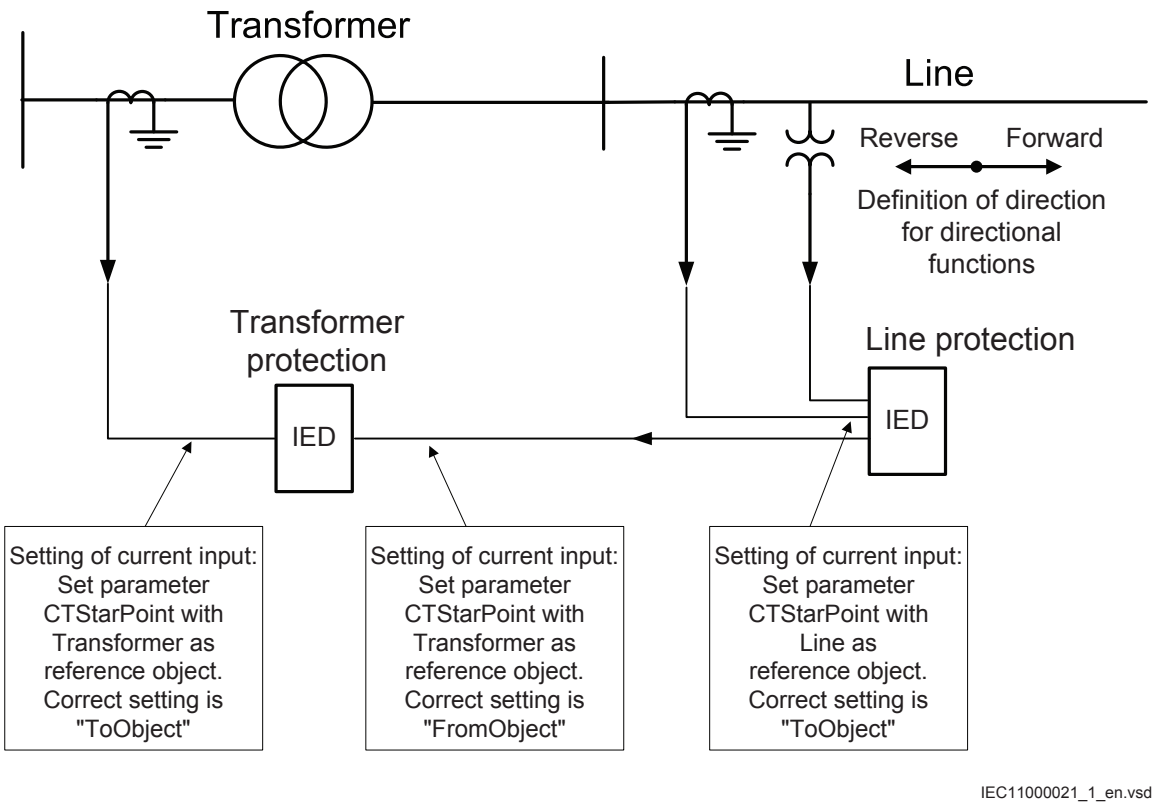

Figure 24: Example how to set CTStarPoint parameters in the IED

This example is similar to example 1, but the power transformer is feeding just one line; both line protection IED and transformer protection IED use the same CT. The CT direction is set with different reference objects for the two IEDs though it is the same current from the same CT that is feeding the two IEDs. With these settings the directional functions of the line protection shall be set to *Forward* to look towards the line.

4.2.2.3 Examples on how to connect, configure and set CT inputs for most commonly used CT connections

Figure 25 defines the marking of current transformer terminals commonly used around the world:

In the SMAI function block, you have to set if the SMAI block is measuring current or voltage. This is done with the parameter: *AnalogInputType*: Current/voltage. The *ConnectionType*: phase - phase/phase-earth and *GlobalBaseSel*.

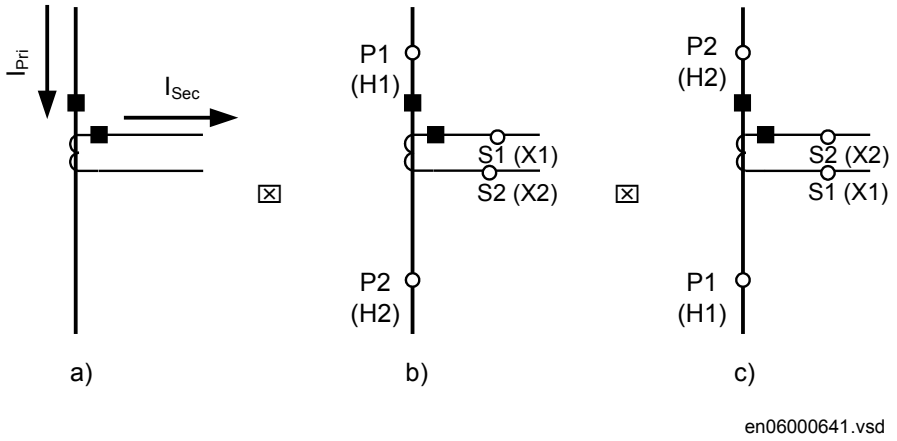

Figure 25: Commonly used markings of CT terminals

Where:

a) is symbol and terminal marking used in this document. Terminals marked with a dot indicates the primary and secondary winding terminals with the same (that is, positive) polarity

b) and c) are equivalent symbols and terminal marking used by IEC (ANSI) standard for CTs. Note that for these two cases the CT polarity marking is correct!

It shall be noted that depending on national standard and utility practices, the rated secondary current of a CT has typically one of the following values:

- 1A
- 5A

However in some cases the following rated secondary currents are used as well:

- 2A
- 10A

The IED fully supports all of these rated secondary values.

4.2.2.4 Example on how to connect a star connected three-phase CT set to the IED

Figure 26 gives an example about the wiring of a star connected three-phase CT set to the IED. It gives also an overview of the actions which are needed to make this measurement available to the built-in protection and control functions within the IED as well.

For correct terminal designations, see the connection diagrams valid for the delivered IED.

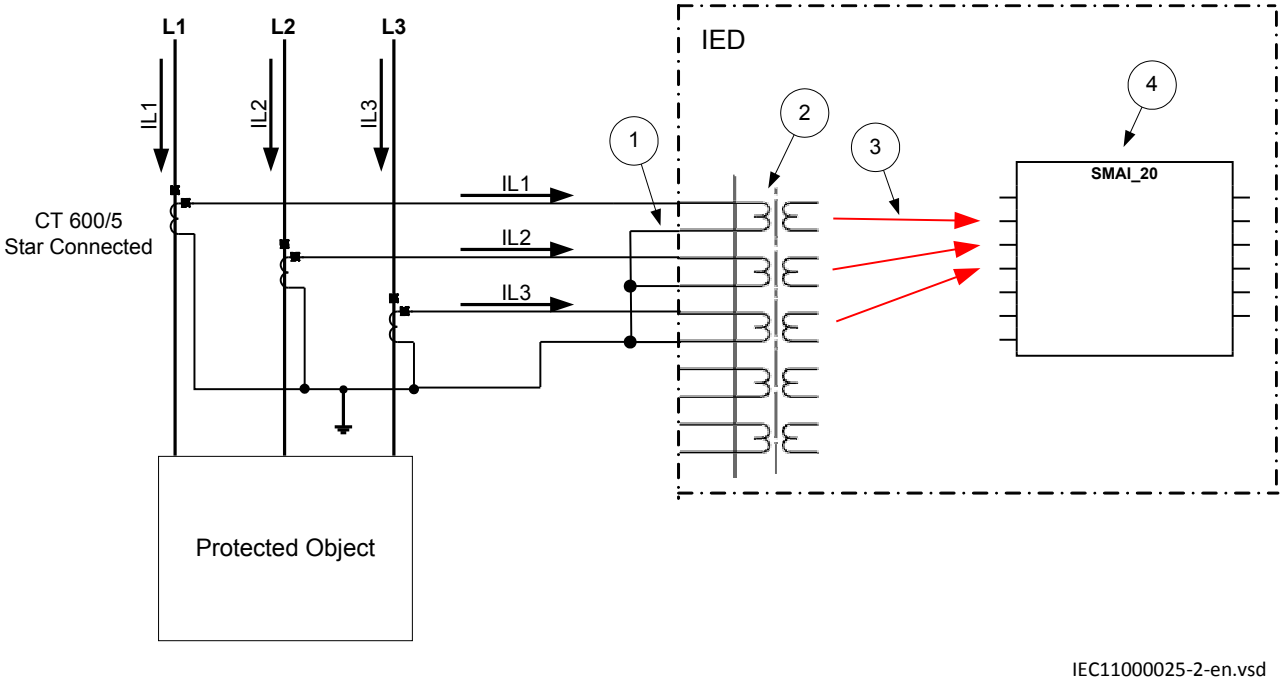

Figure 26: Star connected three-phase CT set with star point towards the protected object

Where:

1) The drawing shows how to connect three individual phase currents from a star connected three-phase CT set to the three CT inputs of the IED.

2) is the TRM or AIM where these current inputs are located. It shall be noted that for all these current inputs the following setting values shall be entered.

- CTprim=600A
- CTsec=5A
- CTStarPoint=ToObject

Inside the IED only the ratio of the first two parameters is used. The third parameter as set in this example will have no influence on the measured currents (that is, currents are already measured towards the protected object).

3) are three connections, which connects these three current inputs to three input channels of the preprocessing function block 4). Depending on the type of functions, which need this current information, more than one preprocessing block might be connected in parallel to the same three physical CT inputs.

4) is a Preprocessing block that has the task to digitally filter the connected analog inputs and calculate:

- fundamental frequency phasors for all four input channels
- harmonic content for all four input channels
- positive, negative and zero sequence quantities by using the fundamental frequency phasors for the first three input channels (channel one taken as reference for sequence quantities)

These calculated values are then available for all built-in protection and control functions within the IED, which are connected to this preprocessing function block. For this application most of the preprocessing settings can be left to the default values.
If frequency tracking and compensation is required (this feature is typically required only for IEDs installed in the generating stations), then the setting parameters DFTReference shall be set accordingly.

Another alternative is to have the star point of the three-phase CT set as shown in figure 27:

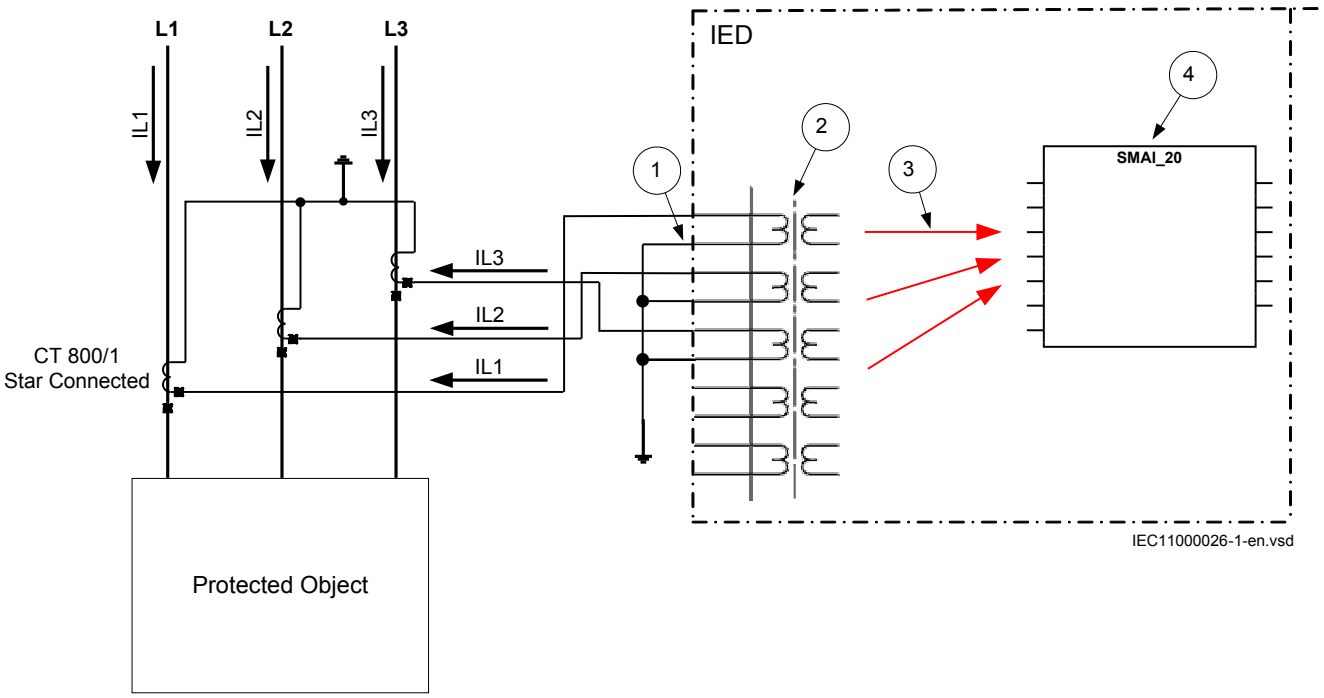

Figure 27: Star connected three-phase CT set with its star point away from the protected object

In this case everything is done in a similar way as in the above described example, except that for all used current inputs on the TRM the following setting parameters shall be entered as shown in the example figure 27:

- *CTprim*=600A
- *CTsec*=5A
- *CTStarPoint*=FromObject

Inside the IED only the ratio of the first two parameters is used. The third parameter as set in this example will negate the measured currents in order to ensure that the currents are measured towards the protected object within the IED.

4.2.2.5 Example how to connect delta connected three-phase CT set to the IED

Figure 28 gives an example how to connect a delta connected three-phase CT set to the IED. It gives an overview of the required actions by the user in order to make this measurement available to the built-in protection and control functions in the IED as well.

For correct terminal designations, see the connection diagrams valid for the delivered IED.

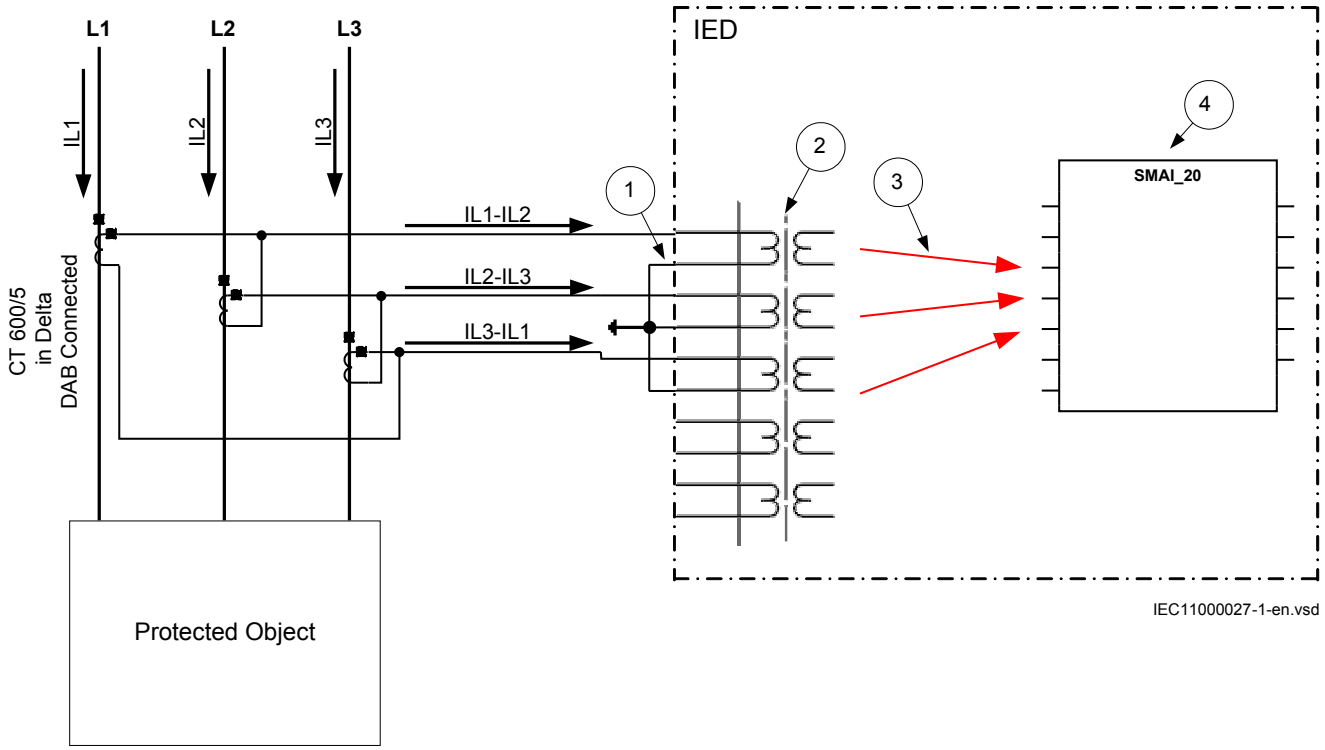

Figure 28: Delta DAB connected three-phase CT set

Where:

1) shows how to connect three individual phase currents from a delta connected three-phase CT set to three CT inputs of the IED.

2) is the TRM or AIM where these current inputs are located. It shall be noted that for all these current inputs the following setting values shall be entered.

$$CT_{prim} = \frac{600}{\sqrt{3}} = 346A$$
$$CT\sec = 5A$$

(Equation 26)

- *CTStarPoint=ToObject*

3) are three connections, which connect these three current inputs to three input channels of the preprocessing function block 4). Depending on the type of functions which need this current information, more then one preprocessing block might be connected in parallel to these three CT inputs.

4) is a Preprocessing block that has the task to digitally filter the connected analog inputs and calculate:

- fundamental frequency phasors for all three input channels
- harmonic content for all three input channels
- positive, negative and zero sequence quantities by using the fundamental frequency phasors for the first three input channels (channel one taken as reference for sequence quantities)

These calculated values are then available for all built-in protection and control functions within the IED, which are connected to this preprocessing function block. For this application most of the preprocessing settings can be left to the default values.
If frequency tracking and compensation is required (this feature is typically required only for IEDs installed in the generating stations) then the setting parameters *DFTReference* shall be set accordingly.

Another alternative is to have the delta connected CT set as shown in figure 29:

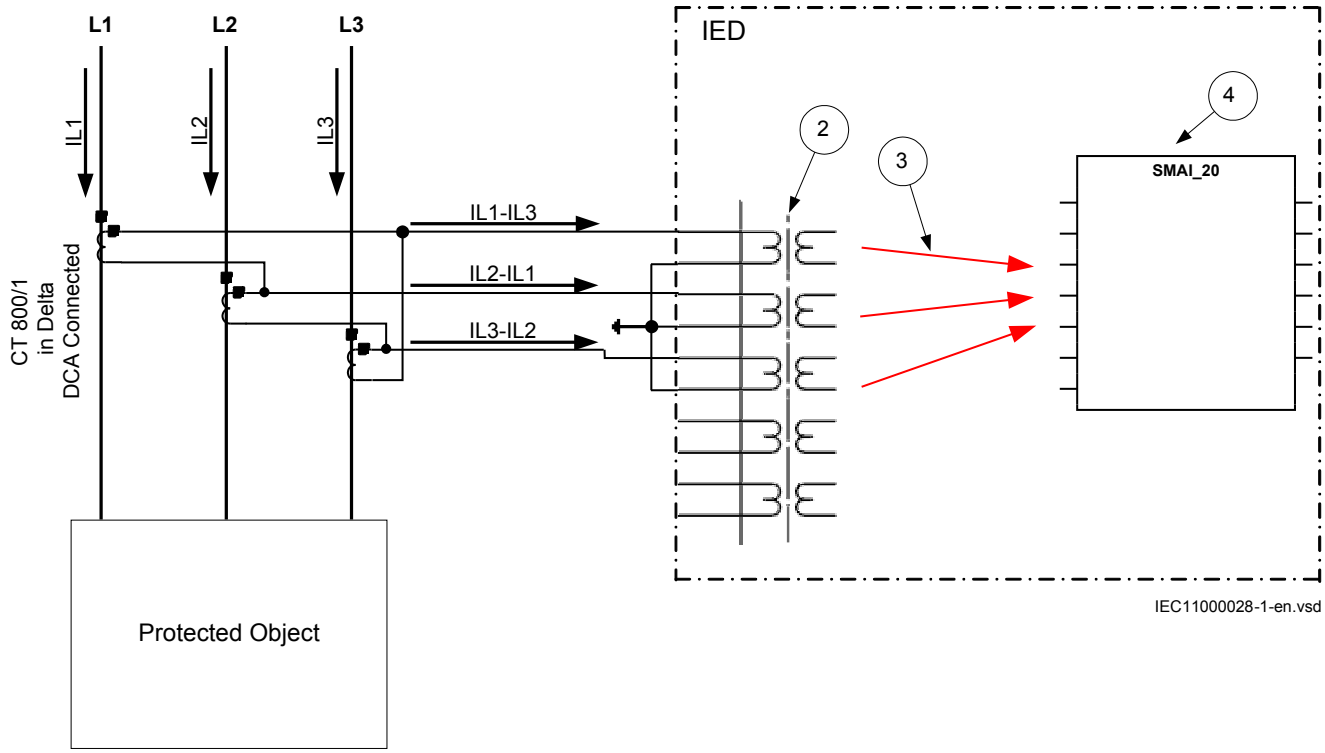

Figure 29: Delta DAC connected three-phase CT set

In this case, everything is done in a similar way as in the above described example, except that for all used current inputs on the TRM the following setting parameters shall be entered:

$$CT_{prim} = \frac{800}{\sqrt{3}} = 462A$$

$$CT_{\sec} = 1A$$

(Equation 27)

- *CTStarPoint*=ToObject

4.2.2.6 Example how to connect single-phase CT to the IED

Figure 30 gives an example how to connect the single-phase CT to the IED. It gives an overview of the required actions by the user in order to make this measurement available to the built-in protection and control functions within the IED as well.

For correct terminal designations, see the connection diagrams valid for the delivered IED.

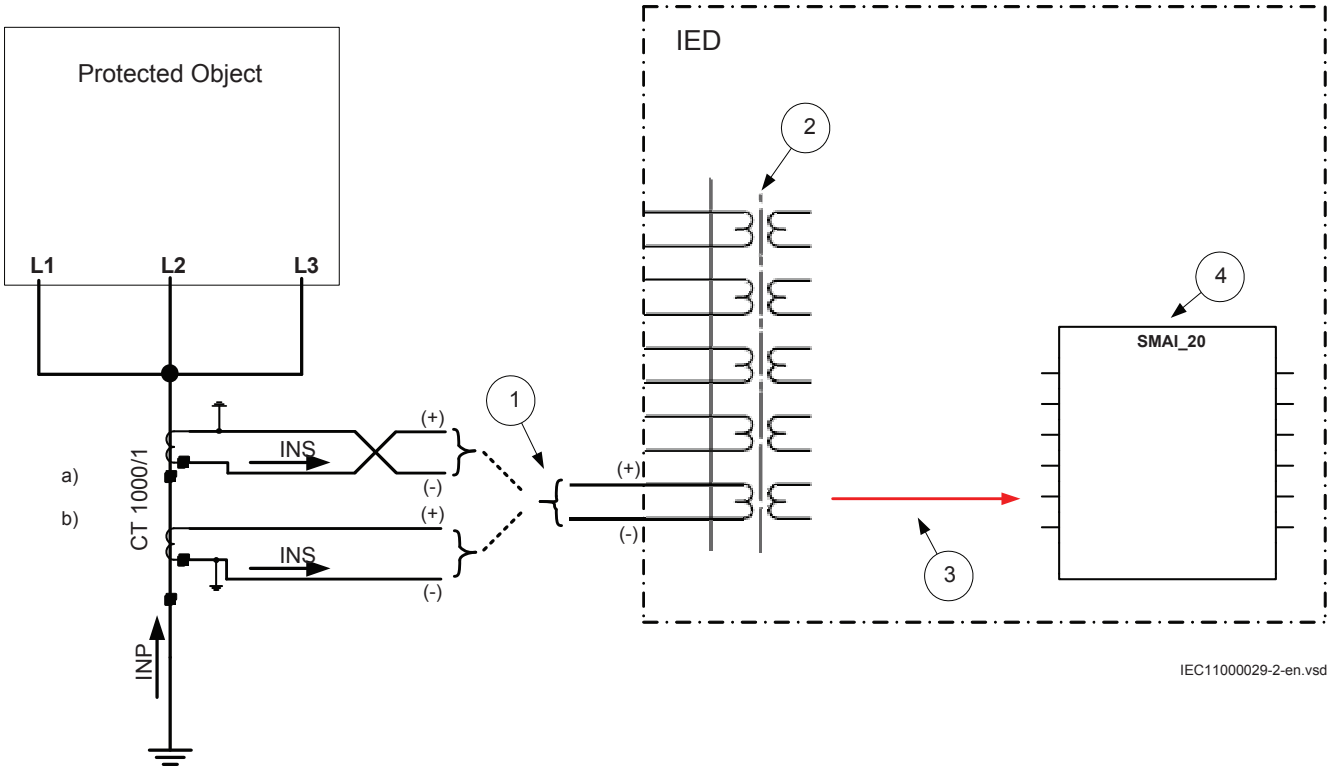

Figure 30: Connections for single-phase CT input

Where:

1) shows how to connect single-phase CT input in the IED.

2) is TRM or AIM where these current inputs are located. For all these current inputs the following setting values shall be entered.
For connection (a) shown in figure 30:

$$CT_{prim} = 600A$$
$$CT_{\sec} = 5A$$

(Equation 28)

CTStarPoint=ToObject

For connection (b) shown in figure 30:

$$CT_{prim} = 600A$$
$$CT_{\sec} = 5A$$

(Equation 29)

CTStarPoint=FromObject

3) shows the connection made in SMT tool, which connect this CT input to the fourth input channel of the preprocessing function block 4).

4) is a Preprocessing block that has the task to digitally filter the connected analog inputs and calculate:
These calculated values are then available for all built-in protection and control functions within the IED, which are connected to this preprocessing function block..
If frequency tracking and compensation is required (this feature is typically required only for IEDs installed in the generating stations) then the setting parameters *DFTReference* shall be set accordingly.

4.2.3 Setting of voltage channels

As the IED uses primary system quantities the main VT ratios must be known to the IED. This is done by setting the two parameters *VTsec* and *VTprim* for each voltage channel. The phase-to-phase value can be used even if each channel is connected to a phase-to-earth voltage from the VT.

4.2.3.1 Example

Consider a VT with the following data:

$$\frac{132kV}{\sqrt{3}} \Big/ \frac{110V}{\sqrt{3}}$$

(Equation 30)

The following setting should be used: *VTprim=132* (value in kV) *VTsec=110* (value in V)

4.2.3.2 Examples how to connect, configure and set VT inputs for most commonly used VT connections

Figure 31 defines the marking of voltage transformer terminals commonly used around the world.

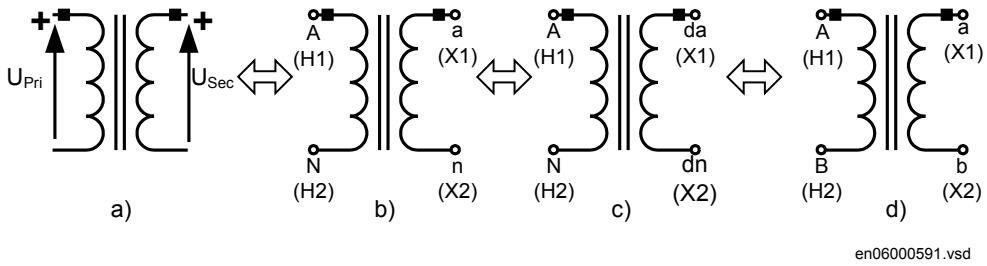

Figure 31: Commonly used markings of VT terminals

Where:

a) is the symbol and terminal marking used in this document. Terminals marked with a dot indicate the primary and secondary winding terminals with the same (positive) polarity

b) is the equivalent symbol and terminal marking used by IEC (ANSI) standard for phase-to-earth connected VTs

c) is the equivalent symbol and terminal marking used by IEC (ANSI) standard for open delta connected VTs

d) is the equivalent symbol and terminal marking used by IEC (ANSI) standard for phase-to-phase connected VTs

It shall be noted that depending on national standard and utility practices the rated secondary voltage of a VT has typically one of the following values:

- 100 V
- 110 V
- 115 V
- 120 V
- 230 V

The IED fully supports all of these values and most of them will be shown in the following examples.

4.2.3.3 Examples on how to connect a three phase-to-earth connected VT to the IED

Figure 32 gives an example about the wiring of a a three phase-to-earth connected VT to the IED. It gives aslo an overview of required actions which are needed to make this measurement available to the built-in protection and control functions within the IED.

For correct terminal designations, see the connection diagrams valid for the delivered IED.

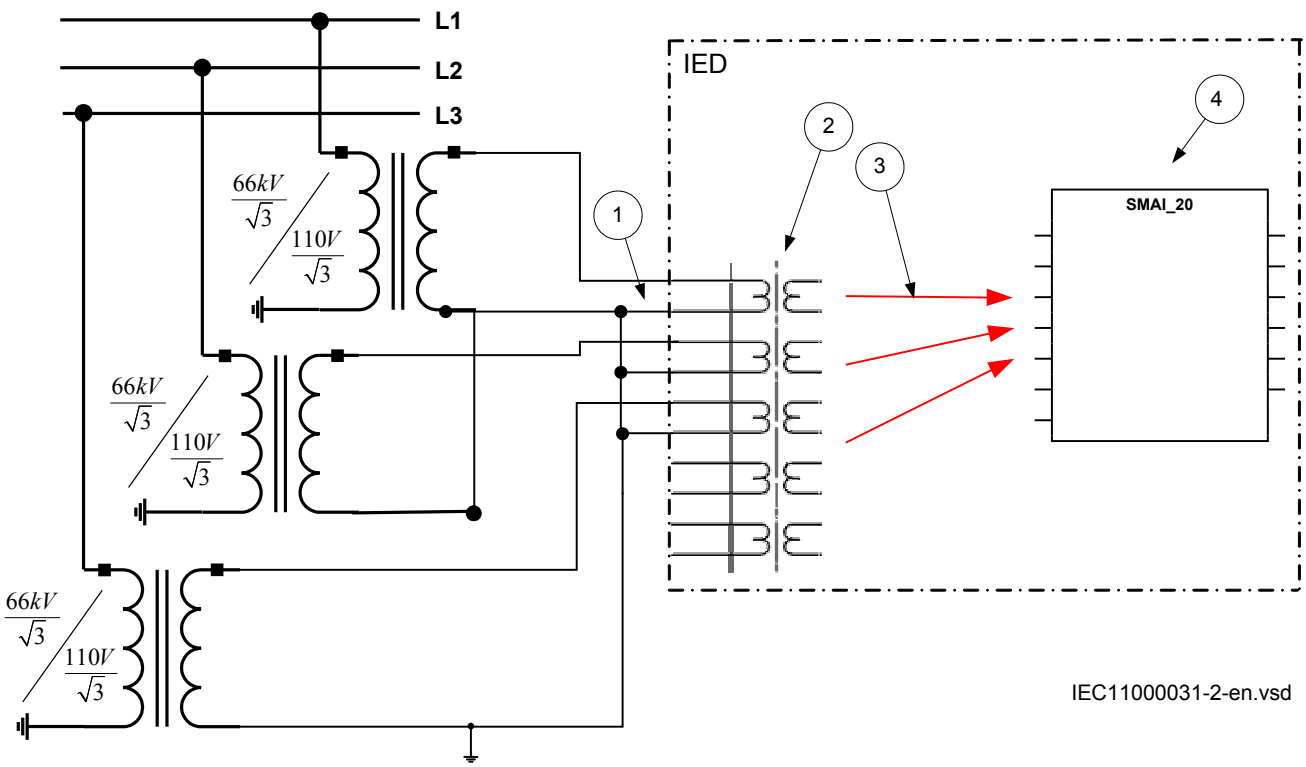

Figure 32: A Three phase-to-earth connected VT

Where:

1) shows how to connect three secondary phase-to-earth voltages to three VT inputs on the IED

2) is the TRM or AIM where these three voltage inputs are located. For these three voltage inputs, the following setting values shall be entered:
VTprim = 66 kV
VTsec = 110 V
The ratio of the entered values exactly corresponds to the ratio of one individual VT.

$$\frac{66}{110} = \frac{66/\sqrt{3}}{110/\sqrt{3}}$$

(Equation 31)

3) are three connections made in Signal Matrix Tool (SMT), which connect these three voltage inputs to first three input channels of the preprocessing function block 4). Depending on the type of functions which need this voltage information, more then one preprocessing block might be connected in parallel to these three VT inputs.

4) is a Preprocessing block that has the task to digitally filter the connected analog inputs and calculate:

- fundamental frequency phasors for all four input channels
- harmonic content for all four input channels
- positive, negative and zero sequence quantities by using the fundamental frequency phasors for the first three input channels (channel one taken as reference for sequence quantities)

These calculated values are then available for all built-in protection and control functions within the IED, which are connected to this preprocessing function block in the configuration tool. For this application most of the preprocessing settings can be left to the default values.

4.2.3.4 Example on how to connect a phase-to-phase connected VT to the IED

Figure 33 gives an example how to connect a phase-to-phase connected VT to the IED. It gives an overview of the required actions by the user in order to make this measurement available to the built-in protection and control functions within the IED as well. It shall be noted that this VT connection is only used on lower voltage levels (that is, rated primary voltage below 40 kV).

For correct terminal designations, see the connection diagrams valid for the delivered IED.

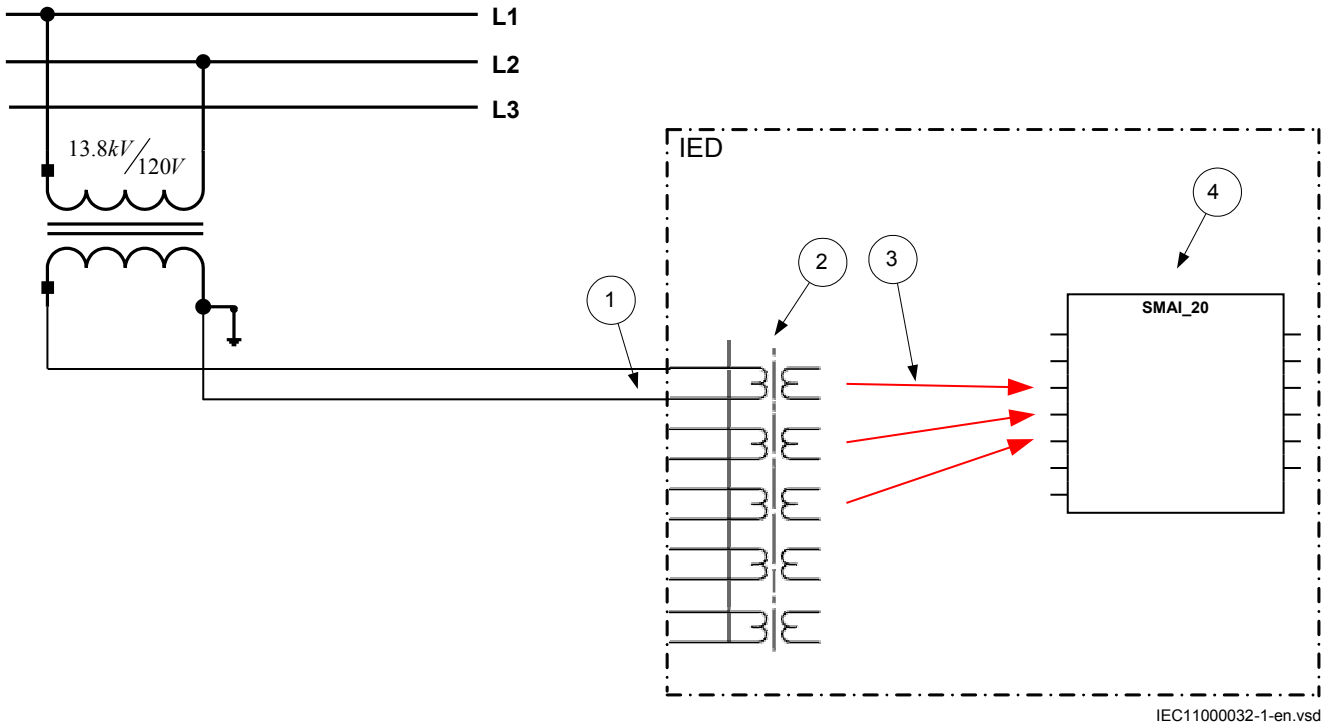

Figure 33: A Phase-to-phase connected VT

Where:

1) shows how to connect the secondary side of a phase-to-phase VT to the VT inputs on the IED

2) is the TRM or AIM where this voltage input is located. The following setting values shall be entered:
VTprim=13.8 kV
VTsec=120 V

3) are three connections, which connects these three voltage inputs to three input channels of the preprocessing function block 4). Depending on the type of functions, which need this voltage information, more than one preprocessing block might be connected in parallel to these three VT inputs

4) Preprocessing block has a task to digitally filter the connected analog inputs and calculate:

- fundamental frequency phasors for all four input channels
- harmonic content for all four input channels
- positive, negative and zero sequence quantities by using the fundamental frequency phasors for the first three input channels (channel one taken as reference for sequence quantities)

These calculated values are then available for all built-in protection and control functions within the IED, which are connected to this preprocessing function block. For this application most of the preprocessing settings can be left to the default values. However the following settings shall be set as shown here:
ConnectionType=Ph-Ph
UBase=13.8 kV
If frequency tracking and compensation is required (this feature is typically required only for IEDs installed in the generating stations) then the setting parameters *DFTReference* shall be set accordingly.

4.2.3.5 Example how to connect the open delta VT to the IED for low impedance earthed or solidly earthed power systems

Figure 34 gives an example how to connect the open delta VT to the IED for low impedance earthed or solidly earthed power systems. It shall be noted that this type of VT connection presents secondary voltage proportional to $3U_0$ to the IED.

In case of a solid earth fault close to the VT location the primary value of 3Uo will be equal to:

$$3Uo = \frac{U_{Ph-Ph}}{\sqrt{3}} = U_{Ph-E}$$

(Equation 32)

The primary rated voltage of such VT is always equal to UPh-E Therefore, three series connected VT secondary windings will give the secondary voltage equal only to one individual VT secondary winding rating. Thus the secondary windings of such open delta VTs quite often has a secondary rated voltage close to rated phase-to-phase VT secondary voltage, that is, 115V or 115/√3V as in this particular example. Figure 34 as well gives overview of required actions by the user in order to make this measurement available to the built-in protection and control functions within the IED.

For correct connections, see the connection diagrams valid for the delivered IED.

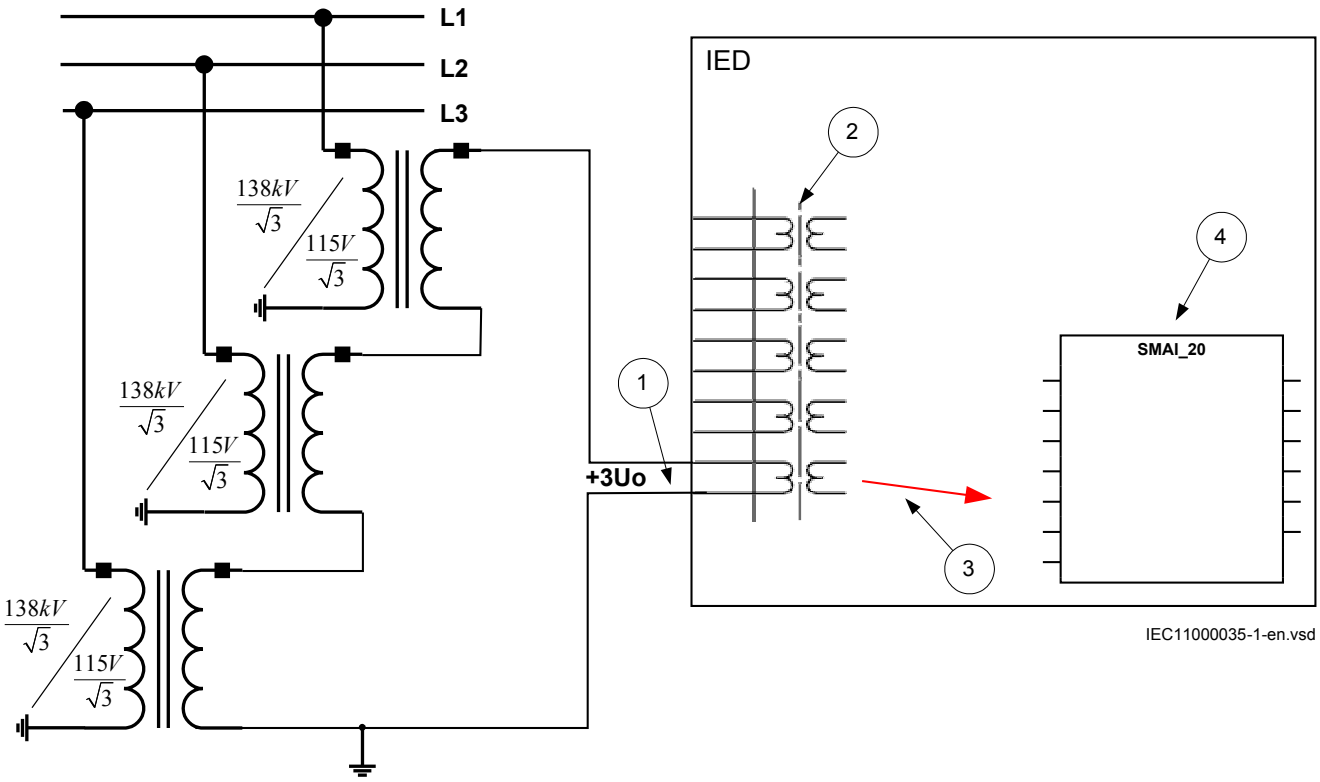

Figure 34: Open delta connected VT in low impedance or solidly earthed power system

Where:

1) shows how to connect the secondary side of open delta VT to one VT input in the IED.

+3Uo shall be connected to the IED.

2) is TRM or AIM where this voltage input is located. It shall be noted that for this voltage input the following setting values shall be entered:

$$VTprim = \sqrt{3} \cdot \frac{138}{\sqrt{3}} = 138kV$$

(Equation 33)

$$VT\sec = \sqrt{3} \cdot \frac{115}{\sqrt{3}} = 115V$$

(Equation 34)

Inside the IED, only the ratio of these two parameters is used. It shall be noted that the ratio of the entered values exactly corresponds to ratio of one individual open delta VT.

$$\frac{138}{115} = \frac{138/\sqrt{3}}{115/\sqrt{3}}$$

(Equation 35)

3) shows the connection, which connect this voltage input to the input channel of the preprocessing function block 4).

4) preprocessing block has a task to digitally filter the connected analog inputs and calculate:

- fundamental frequency phasors for all four input channels
- harmonic content for all four input channels
- positive, negative and zero sequence quantities by using the fundamental frequency phasors for the first three input channels (channel one taken as reference for sequence quantities)

These calculated values are then available for all built-in protection and control functions within the IED, which are connected to this preprocessing function block. For this application most of the preprocessing settings can be left to the default values. If frequency tracking and compensation is required (this feature is typically required only for IEDs installed in the generating stations) then the setting parameters *DFTReference* shall be set accordingly.

4.2.3.6 Example on how to connect a neutral point VT to the IED

Figure 35 gives an example on how to connect a neutral point VT to the IED. This type of VT connection presents secondary voltage proportional to U_0 to the IED.

In case of a solid earth fault in high impedance earthed or unearthed systems the primary value of Uo voltage will be equal to:

$$U0 = \frac{U_{Ph-Ph}}{\sqrt{3}} = U_{Ph-E}$$

(Equation 36)

Figure 35 gives an overview of required actions by the user in order to make this measurement available to the built-in protection and control functions within the IED as well.

For correct terminal designations, see the connection diagrams valid for the delivered IED.

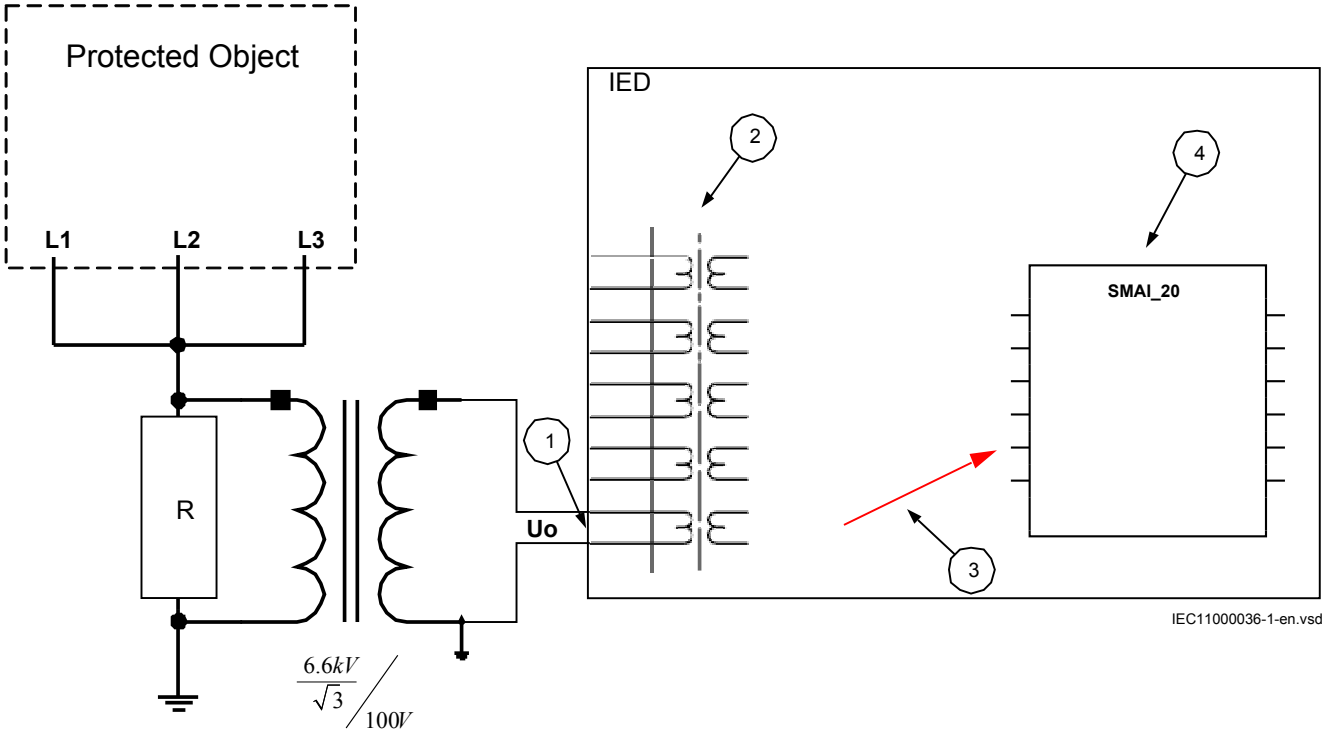

Figure 35: Neutral point connected VT

Where:

1) shows how to connect the secondary side of neutral point VT to one VT input in the IED.

U_0 shall be connected to the IED.

2) is the TRM or AIM where this voltage input is located. For this voltage input the following setting values shall be entered:

$$VTprim = \frac{6.6}{\sqrt{3}} = 3.81kV$$

(Equation 37)

$$VT\sec = 100V$$

(Equation 38)

3) shows the connection which connects this voltage input to the fourth input channel of the preprocessing function block 4).

4) is a preprocessing block that has the task to digitally filter the connected analog inputs and calculate:
These calculated values are then available for all built-in protection and control functions within the IED, which are connected to this preprocessing function block. For this application most of the preprocessing settings can be left to the default values.
If frequency tracking and compensation is required (this feature is typically required only for IEDs installed in the generating stations) then the setting parameters *DFTReference* shall be set accordingly.

Section 5 Local human-machine interface

5.1 Local HMI

Figure 36: Local human-machine interface

The LHMI of the IED contains the following elements:

- Display (LCD)
- Buttons
- LED indicators
- Communication port

The LHMI is used for setting, monitoring and controlling.

5.1.1 Display

The LHMI includes a graphical monochrome display with a resolution of 320 x 240 pixels. The character size can vary. The amount of characters and rows fitting the view depends on the character size and the view that is shown.

The display view is divided into four basic areas.

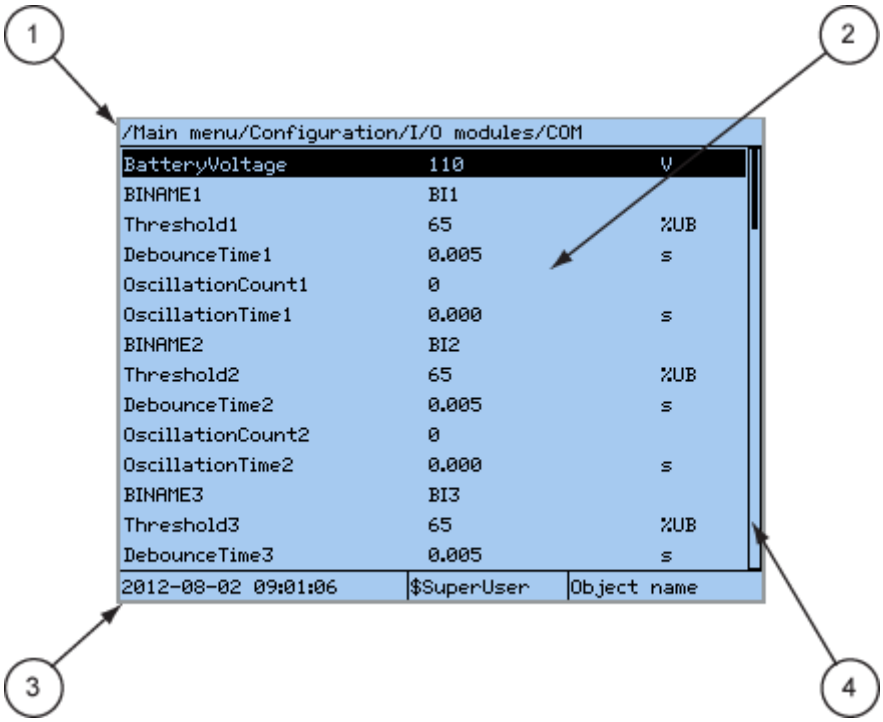

Figure 37: Display layout

1 Path
2 Content
3 Status
4 Scroll bar (appears when needed)

The function button panel shows on request what actions are possible with the function buttons. Each function button has a LED indication that can be used as a feedback signal for the function button control action. The LED is connected to the required signal with PCM600.

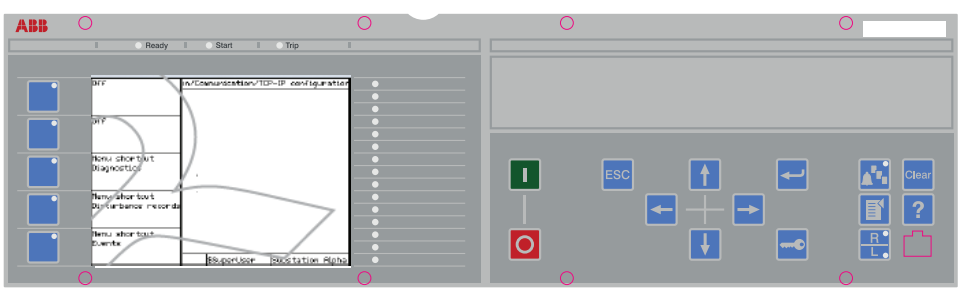

Figure 38: Function button panel

The alarm LED panel shows on request the alarm text labels for the alarm LEDs.

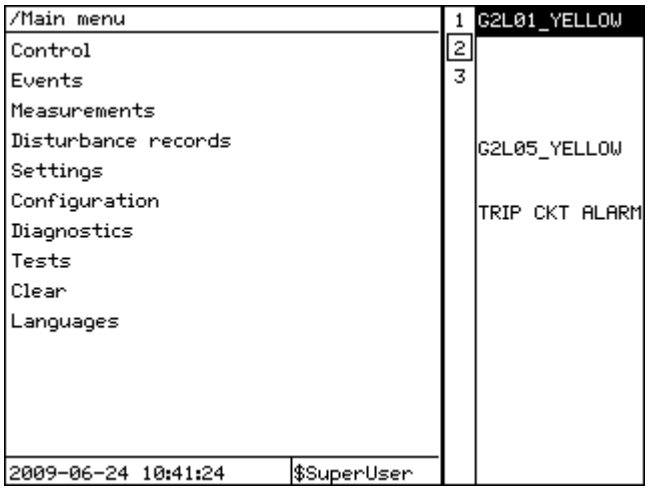

Figure 39: Alarm LED panel

The function button and alarm LED panels are not visible at the same time. Each panel is shown by pressing one of the function buttons or the Multipage button. Pressing the ESC button clears the panel from the display. Both the panels have dynamic width that depends on the label string length that the panel contains.

5.1.2 LEDs

The LHMI includes three protection status LEDs above the display: Ready, Start and Trip.

There are 15 programmable alarm LEDs on the front of the LHMI. Each LED can indicate three states with the colors: green, yellow and red. The alarm texts related to each three-color LED are divided into three pages.

There are 3 separate pages of LEDs available. The 15 physical three-color LEDs in one LED group can indicate 45 different signals. Altogether, 135 signals can be indicated since there are three LED groups. The LEDs can be configured with PCM600 and the operation mode can be selected with the LHMI or PCM600.

5.1.3 Keypad

The LHMI keypad contains push-buttons which are used to navigate in different views or menus. The push-buttons are also used to acknowledge alarms, reset indications, provide help and switch between local and remote control mode.

The keypad also contains programmable push-buttons that can be configured either as menu shortcut or control buttons.

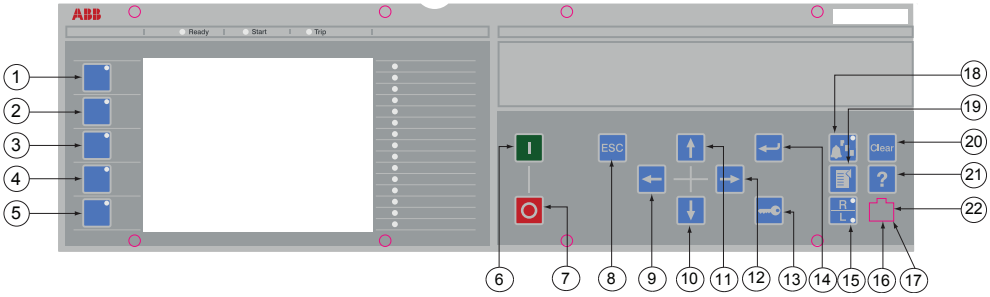

Figure 40: LHMI keypad with object control, navigation and command push-buttons and RJ-45 communication port

1...5	Function button
6	Close
7	Open
8	Escape
9	Left
10	Down
11	Up
12	Right
13	Key
14	Enter
15	Remote/Local
16	Uplink LED
17	Not in use
18	Multipage
19	Menu
20	Clear
21	Help
22	Communication port

5.1.4 Local HMI functionality

5.1.4.1 Protection and alarm indication

Protection indicators

The protection indicator LEDs are Ready, Start and Trip.

The start and trip LEDs are configured via the disturbance recorder.

Table 8: Ready LED (green)

LED state	Description
Off	Auxiliary supply voltage is disconnected.
On	Normal operation.
Flashing	Internal fault has occurred.

Table 9: Start LED (yellow)

LED state	Description
Off	Normal operation.
On	A protection function has started and an indication message is displayed. • The start indication is latching and must be reset via communication or by pressing Clear.
Flashing	A flashing yellow LED has a higher priority than a steady yellow LED. The IED is in test mode and protection functions are blocked. • The indication disappears when the IED is no longer in test mode and blocking is removed.

Table 10: Trip LED (red)

LED state	Description
Off	Normal operation.
On	A protection function has tripped and an indication message is displayed. • The trip indication is latching and must be reset via communication or by pressing Clear.

Alarm indicators

The 15 programmable three-color LEDs are used for alarm indication. An individual alarm/status signal, connected to any of the LED function blocks, can be assigned to one of the three LED colors when configuring the IED.

Table 11: Alarm indications

LED state	Description
Off	Normal operation. All activation signals are off.
On	• Follow-S sequence: The activation signal is on. • LatchedColl-S sequence: The activation signal is on, or it is off but the indication has not been acknowledged. • LatchedAck-F-S sequence: The indication has been acknowledged, but the activation signal is still on. • LatchedAck-S-F sequence: The activation signal is on, or it is off but the indication has not been acknowledged. • LatchedReset-S sequence: The activation signal is on, or it is off but the indication has not been acknowledged.
Flashing	• Follow-F sequence: The activation signal is on. • LatchedAck-F-S sequence: The activation signal is on, or it is off but the indication has not been acknowledged. • LatchedAck-S-F sequence: The indication has been acknowledged, but the activation signal is still on.

5.1.4.2 Parameter management

The LHMI is used to access the IED parameters. Three types of parameters can be read and written.

- Numerical values
- String values
- Enumerated values

Numerical values are presented either in integer or in decimal format with minimum and maximum values. Character strings can be edited character by character. Enumerated values have a predefined set of selectable values.

5.1.4.3 Front communication

The RJ-45 port in the LHMI enables front communication.

- The green uplink LED on the left is lit when the cable is successfully connected to the port.

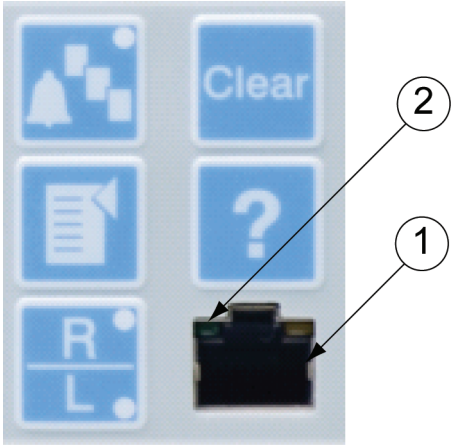

Figure 41: RJ-45 communication port and green indicator LED

1 RJ-45 connector
2 Green indicator LED

When a computer is connected to the IED front port with a crossed-over cable, the IED's DHCP server for the front interface assigns an IP address to the computer if *DHCPServer* = *On*. The default IP address for the front port is 10.1.150.3.

Do not connect the IED front port to a LAN. Connect only a single local PC with PCM600 to the front port.

Section 6 Differential protection

6.1 Transformer differential protection T2WPDIF and T3WPDIF

6.1.1 Identification

Function description	IEC 61850 identification	IEC 60617 identification	ANSI/IEEE C37.2 device number
Transformer differential protection, two-winding	T2WPDIF	3Id/I	87T
Transformer differential protection, three-winding	T3WPDIF	3Id/I	87T

6.1.2 Application

The transformer differential protection is a unit protection. It serves as the main protection of transformers in case of winding failure. The protective zone of a differential protection includes everything between the connected CTs. This includes the transformer and may include the bus-works or cables.

A transformer differential protection compares the current flowing into the transformer with the current leaving the transformer. A correct analysis of fault conditions by the differential protection must take into consideration changes due to the voltage, current and phase angle transformation caused by the protected transformer. Traditional transformer differential protection functions required auxiliary transformers for correction of the phase shift and transformation ratio. The numerical microprocessor based differential algorithm as implemented in the IED compensates for both the turns-ratio and the phase shift internally in the software. No auxiliary current transformers are necessary.

The differential current should theoretically be zero during normal load or during external faults if the turn-ratio and the phase shift are correctly compensated for. However, there are several different phenomena other than internal faults that will cause result in unwanted and false differential currents. The main reasons for unwanted differential currents are:

- mismatch due to varying tap changer positions
- different characteristics, loads and operating conditions of the current transformers
- zero sequence currents that only flow on one side of the power transformer
- normal magnetizing currents
- magnetizing inrush currents
- overexcitation magnetizing currents

6.1.3 Setting guidelines

The parameters for the Transformer differential protection function are set via the local HMI or Protection and Control IED Manager (PCM600).

IED values for the primary current (setting *IBase*), the primary voltage (setting *UBase*) and the primary power (setting *SBase*) for a particular winding are set as a global base value GBASVAL. The settings *GlobalBaseSelW1*, *GlobalBaseSelW2* and *GlobalBaseSelW3* in the differential protection function are used to select the corresponding GBASVAL function as a reference.

6.1.3.1 Inrush restraint methods

With a combination of the second harmonic restraint and the waveform restraint methods it is possibly to create a protection with high security and stability against transformer inrush effects and at the same time maintain stability in case of heavy external faults, even if the current transformers are saturated. The second harmonic restraint function has a settable level. If the ratio of the second harmonic to fundamental harmonic content in the differential current is above the settable limit, the operation of the differential protection is restrained. It is recommended to keep the parameter *I2/I1Ratio = 15%* as the default value in case no special reasons exist to choose a different value.

6.1.3.2 Overexcitation restraint method

Overexcitation current contains odd harmonics, because the waveform is symmetrical about the time axis. As the third harmonic currents cannot flow into a delta winding, the fifth harmonic is the lowest harmonic which can serve as a criterion for overexcitation. The differential protection function is provided with a fifth harmonic restraint to prevent the protection from operation during an overexcitation condition of a power transformer. If the ratio of the fifth harmonic to fundamental harmonic in the differential current is above a settable limit the operation is restrained. It is recommended to use *I5/I1Ratio = 25%* as default value in case no special reasons exist to choose another setting. Transformers likely to be exposed to overvoltage or underfrequency conditions (that is, generator step-up transformers in power stations) should be provided with an overexcitation protection based on V/Hz to achieve a trip before the core thermal limit is reached.

6.1.3.3 Cross-blocking between phases

The basic definition of cross-blocking is that one of the three phases can block operation (that is, tripping) of the other two phases due to the harmonic pollution (2nd or 5th harmonic content) or waveform characteristic of the differential current in that phase the user can control the cross-blocking between the phases via the setting parameter *CrossBlockEn*.

When the parameter *CrossBlockEn* is set to *On*, cross blocking between phases will be introduced. The phase with the operating point above the set bias characteristic will be able to cross-block the other two phases if it is self-blocked by any of the previously explained restrain criteria. As soon as the operating point for this phase is below the set bias characteristic, cross blocking from that phase will be inhibited. The default (recommended) setting value for this parameter is *On*. When parameter *CrossBlockEn* is set to *Off*, any cross blocking between phases will be disabled.

6.1.3.4 Restrained and unrestrained differential protection

The first section of the restrain characteristic gives the highest sensitivity and is used to determine small or high impedance fault within the protected zone.

The second section of the restrain characteristic has an increased slope in order to deal with increased differential current due to additional power transformer losses during heavy loading of the transformer and external fault currents. The third section of the restrain characteristic decreases the sensitivity of the restrained differential function further in order to cope with CT saturation and transformer losses during heavy through faults. A default setting for the operating characteristic with *IdMin = 0.3 * IBase* is recommended in normal applications. If the conditions are known in more detail, higher or lower sensitivity can be chosen. The selection of suitable characteristic should in such cases be based on the knowledge of the class of the current transformers, availability of information on the tap changer position, short circuit power of the systems, and so on.

The unrestrained operation level has a default value of *IdUnre = 10pu*, which is typically acceptable for most of the standard power transformer applications. In the following case, this setting need to be changed accordingly:

- For differential applications on HV shunt reactors, due to the fact that there is no heavy through-fault condition, the unrestrained differential operation level can be set to *IdUnre = 1.75pu*for additional security

The overall operating characteristic of the transformer differential protection is shown in figure 42.

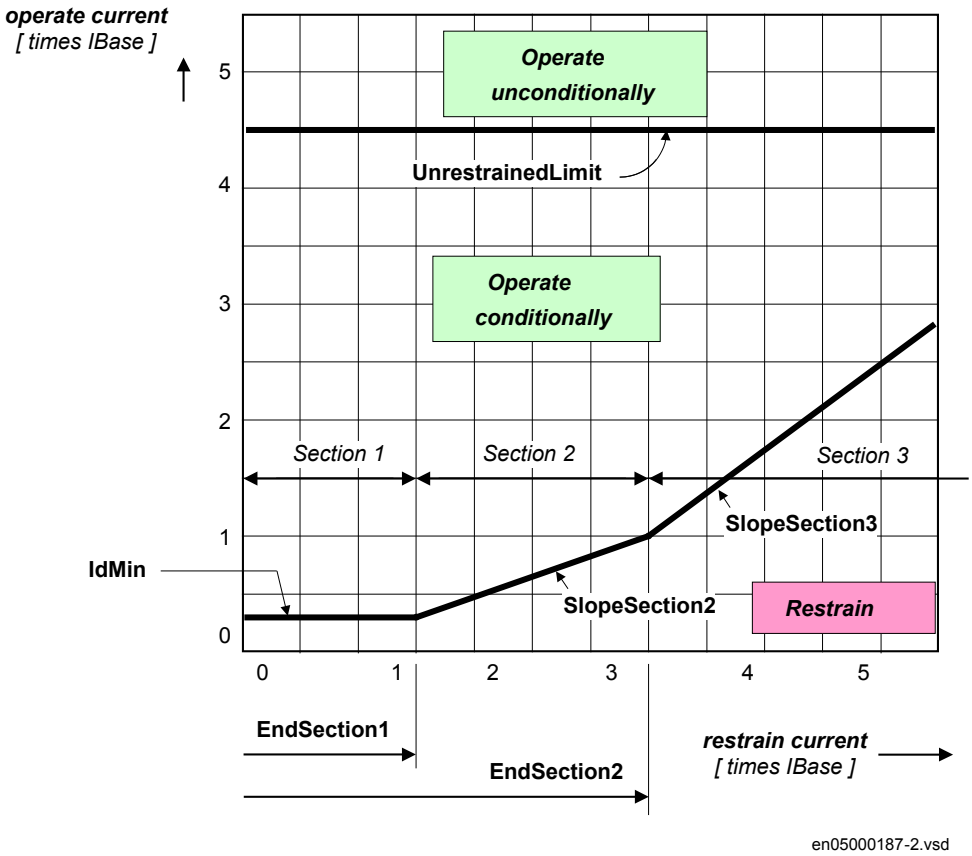

Figure 42: Representation of the restrained-, and the unrestrained operate characteristics

$$slope = \frac{\Delta Ioperate}{\Delta Irestrain} \cdot 100\%$$

(Equation 39)

and where the restrained characteristic is defined by the settings:

1. *IdMin*
2. *EndSection1*
3. *EndSection2*
4. *SlopeSection2*
5. *SlopeSection3*

6.1.3.5 Elimination of zero sequence currents

A differential protection may operate unwanted due to external earth-faults in cases where the zero sequence current can flow on only one side of the power transformer. This is the case when zero sequence current cannot be properly transformed to the other side of the power transformer. Power transformer

connection groups of the Yd or Dy type cannot transform zero sequence current. If a delta winding of a power transformer is earthed via an earthing transformer inside the zone protected by the differential protection there will be an unwanted differential current in case of an external earth-fault. The same is true for an earthed star winding. Even if both the star and delta winding are earthed, the zero sequence current is usually limited by the earthing transformer on the delta side of the power transformer, which may result in differential current as well. To make the overall differential protection insensitive to external earth-faults in these situations the zero sequence currents must be eliminated from the power transformer IED currents on the earthed windings, so that they do not appear as differential currents. The elimination of zero sequence current is done numerically by setting *ZSCurrSubtrWx=Off* or *On* and doesn't require no auxiliary transformers or zero sequence traps.

6.1.3.6 Internal/External fault discriminator

The internal/external fault discriminator operation is based on the relative position of the two phasors (in case of a two-winding transformer) representing the W1 and W2 negative sequence current contributions. It performs a directional comparison between these two phasors.

In order to perform a directional comparison of the two phasors their magnitudes must be high enough so that one can be sure that they are due to a fault. On the other hand, in order to guarantee a good sensitivity of the internal/external fault discriminator, the value of this minimum limit must not be too high. Therefore this limit value (*IMinNegSeq*) is settable in the range from 1% to 20% of the respective winding current. The default value is 4%. Only if the magnitude of both negative sequence current contributions are above the set limit, the relative position between these two phasors is checked. If either of the negative sequence current contributions is too small (less than the set value for *IMinNegSeq*), no directional comparison is made in order to avoid the possibility to produce a wrong decision.

This magnitude check, guarantees stability of the algorithm when the power transformer is energized, since no current will be measured on the low voltage side of the power transformer. In cases where the protected transformer can be energized with a load connected on the LV side (e.g. a step-up transformer in a power station with directly connected auxiliary transformer on its LV side) the value for this setting shall be increased to at least 12%. This is necessary in order to prevent unwanted operation due to LV side currents during the transformer energization.

The setting *NegSeqROA* represents the so-called Relay Operate Angle, which determines the boundary between the internal and external fault regions. It can be selected in the range from 30 degrees to 90 degrees, with a step of 1 degree. The default value is 60 degrees. The default setting 60 degrees somewhat favors security in comparison to dependability. If the user has no well-justified reason for another value, 60 degrees shall be applied.

If the above conditions concerning magnitudes are fulfilled, the internal/external fault discriminator compares the relative phase angle between the negative sequence current contributions from the HV side and LV side of the power transformer using the following two rules (assuming both CT's have their earthing point connected towards the object):

- If the negative sequence currents contributions from HV and LV sides are in phase or at least in the internal fault region, the fault is internal.
- If the negative sequence currents contributions from HV and LV sides are 180 degrees out of phase or at least in the external fault region, the fault is external.

Under external fault condition and with no current transformer saturation, the relative angle is theoretically equal to 180 degrees. During internal fault and with no current transformer saturation, the angle shall ideally be 0 degrees, but due to possible different negative sequence source impedance angles on HV and LV side of power transformer, it may differ somewhat from the ideal zero value.

The internal/external fault discriminator has proved to be very reliable. If a fault is detected, and at the same time the internal/external fault discriminator characterizes this fault as an internal, any eventual blocking signals produced by either the harmonic or the waveform restraints are ignored.

If the bias current is more than 110% of IBase, the negative sequence threshold (*IMinNegSeq*) is increased linearly to desensitize the internal/external fault discriminator during through faults and CT saturation, which will create false negative sequence currents. This assures response times of the differential protection below one power system cycle (below 20 ms for 50 Hz system) for all more severe internal faults. Even for heavy internal faults with severely saturated current transformers the internal/external fault discriminator will make the differential protection operate well below one cycle, since the harmonic distortions in the differential currents do not slow down the differential protection operation.

The sensitive negative sequence current based differential protection, which detects minor internal faults, and where the speed is not as essential as stability against unwanted trips, is restrained when the bias current is more than 150% of *IBase*. For the sensitive negative sequence protection to be reactivated, the bias current must drop back below 110% of *IBase*. The sensitive negative sequence protection is always restrained by the harmonic restraint.

External faults happen ten to hundred times more often than internal ones as far as the power transformers are concerned. If a disturbance is detected and the internal/external fault discriminator characterizes this fault as an external fault, the conventional additional criteria (2nd harmonic, 5th harmonic, waveform block) are posed on the differential algorithm before its trip is allowed. This assures high stability during external faults. However, at the same time the differential function is still capable of trip ping quickly for evolving faults.

The principle of the internal/external fault discriminator can be extended to autotransformers and transformers with three windings. If all three windings are

connected to their respective networks then three directional comparisons are made, but only two comparisons are necessary in order to positively determine the position of the fault with respect to the protected zone. The directional comparisons are: W1 - (W2 + W3); W2 - (W1 + W3); W3 - (W1 + W2). The rule applied by the internal/external fault discriminator in case of three-winding power transformers is:

- If all comparisons indicate an internal fault, then it is an internal fault.
- If any comparison indicates an external fault, then it is an external fault

If one of the windings is not connected, the algorithm automatically reduces to the two-winding version. Nevertheless, the whole power transformer is protected, including the non-connected winding.

6.1.3.7 Differential current alarm

Differential protection continuously monitors the level of the fundamental frequency differential currents and gives an alarm if the pre-set value is simultaneously exceeded in all three phases. Set the time delayed defined by parameter *tAlarmDelay* two times longer than the on-load tap-changer mechanical operating time (For example, typical setting value 10s).

6.1.3.8 Switch onto fault feature

The Transformer differential (TW2PDIF for two winding and TW3PDIF for three winding) function in the IED has a built-in, advanced switch onto fault feature. This feature can be enabled or disabled by the setting parameter *SOTFMode*. When *SOTFMode = On* this feature is enabled. It shall be noted that when this feature is enabled it is not possible to test the 2nd harmonic blocking feature by simply injecting one current with superimposed second harmonic. In that case the switch on to fault feature will operate and the differential protection will trip. However for a real inrush case the differential protection function will properly restrain from operation.

For more information about the operating principles of the switch onto fault feature please read the *“Technical Manual”*..

6.1.4 Setting example

6.1.4.1 CT Connections

The IED has been designed with the assumption that all main CTS are star connected. The IED can be used in applications where the main CTs are delta connected. For such applications the following shall be kept in mind:

1. The ratio for delta connected CTs shall be set √(3)=1.732 times smaller than the actual individual phase CT ratio.
2. The power transformer vector group shall typically be set as Yy0 because the compensation for the actual phase shift is provided by the external delta CT connection.
3. The zero sequence current is eliminated by the main CT delta connections. Thus on sides where CTs are connected in delta the zero sequence current elimination shall be set to Off in the IED.

The following table summarizes the most commonly used star-delta vector groups around the world and provides information about the required type of main CT delta connection on the star side of the protected transformer.

IEC vector group	Positive sequence no-load voltage phasor diagram	Required delta CT connection type on star side of the protected power transformer and internal vector group setting in the IED
YNd1	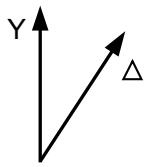	Yy0
Dyn1	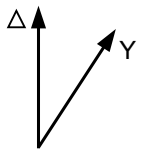	Yy0
YNd11	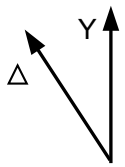	Yy0
Table continues on next page		

IEC vector group	Positive sequence no-load voltage phasor diagram	Required delta CT connection type on star side of the protected power transformer and internal vector group setting in the IED
Dyn11	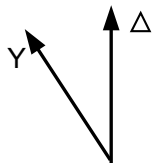	Yy0
YNd5	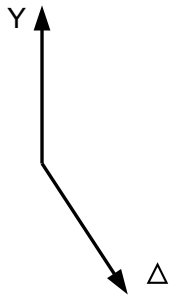	Yy6
Dyn5	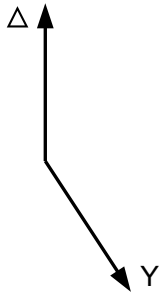	Yy6

6.2 Restricted earth fault protection, low impedance REFPDIF

6.2.1 Identification

Function description	IEC 61850 identification	IEC 60617 identification	ANSI/IEEE C37.2 device number
Restricted earth fault protection, low impedance	REFPDIF	*IdN/I*	87N

6.2.2 Application

A breakdown of the insulation between a transformer winding and the core or the tank may result in a large fault current which causes severe damage to the windings and the transformer core. A high gas pressure may develop, damaging the transformer tank.

Fast and sensitive detection of earth faults in a power transformer winding can be obtained in solidly earthed or low impedance earthed networks by the restricted earth-fault protection. The only requirement is that the power transformer winding is connected to earth in the star point (in case of star-connected windings) or through a separate earthing transformer (in case of delta-connected windings).

The low impedance restricted earth-fault protection REFPDIF is a winding protection function. It protects the power transformer winding against faults involving earth. Observe that single phase-to-earth faults are the most common fault types in transformers. A sensitive earth-fault protection is therefore desirable.

Restricted earth-fault protection is the fastest and the most sensitive protection, a power transformer winding can have and will detect faults such as:

- earth faults in the transformer winding when the network is earthed through an impedance
- earth faults in the transformer winding in solidly earthed network when the point of the fault is close to the winding star point.

The restricted earth-fault protection is not affected, as a differential protection, with the following power transformer related phenomena:

- magnetizing inrush currents
- overexcitation magnetizing currents
- load tap changer
- external and internal phase faults which do not involve earth
- symmetrical overload conditions

Due to its features, REFPDIF is often used as a main protection of the transformer winding for all faults involving earth.

6.2.2.1 Application examples

Transformer winding, solidly earthed

The most common application is on a solidly earthed transformer winding. The connection is shown in figure 43.

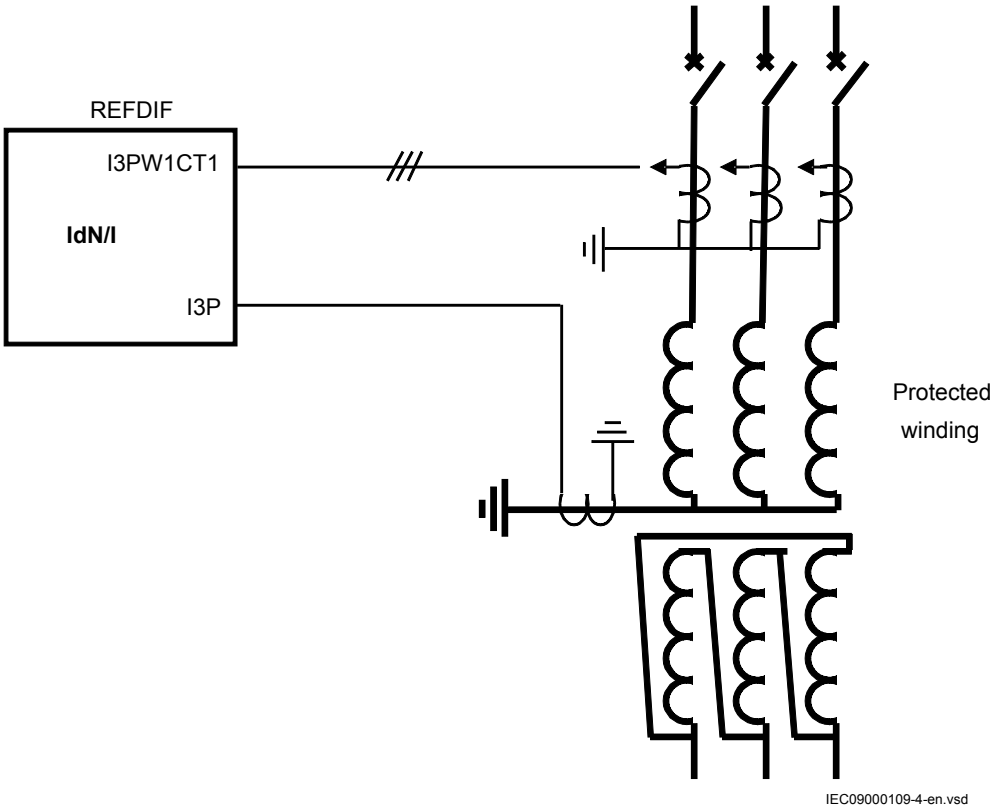

Figure 43: Connection of the low impedance Restricted earth-fault function REFPDIF for a directly (solidly) earthed transformer winding

Transformer winding, earthed through zig-zag earthing transformer

A common application is for low reactance earthed transformer where the earthing is through separate zig-zag earthing transformers. The fault current is then limited to typical 800 to 2000 A for each transformer. The connection for this application is shown in figure 44.

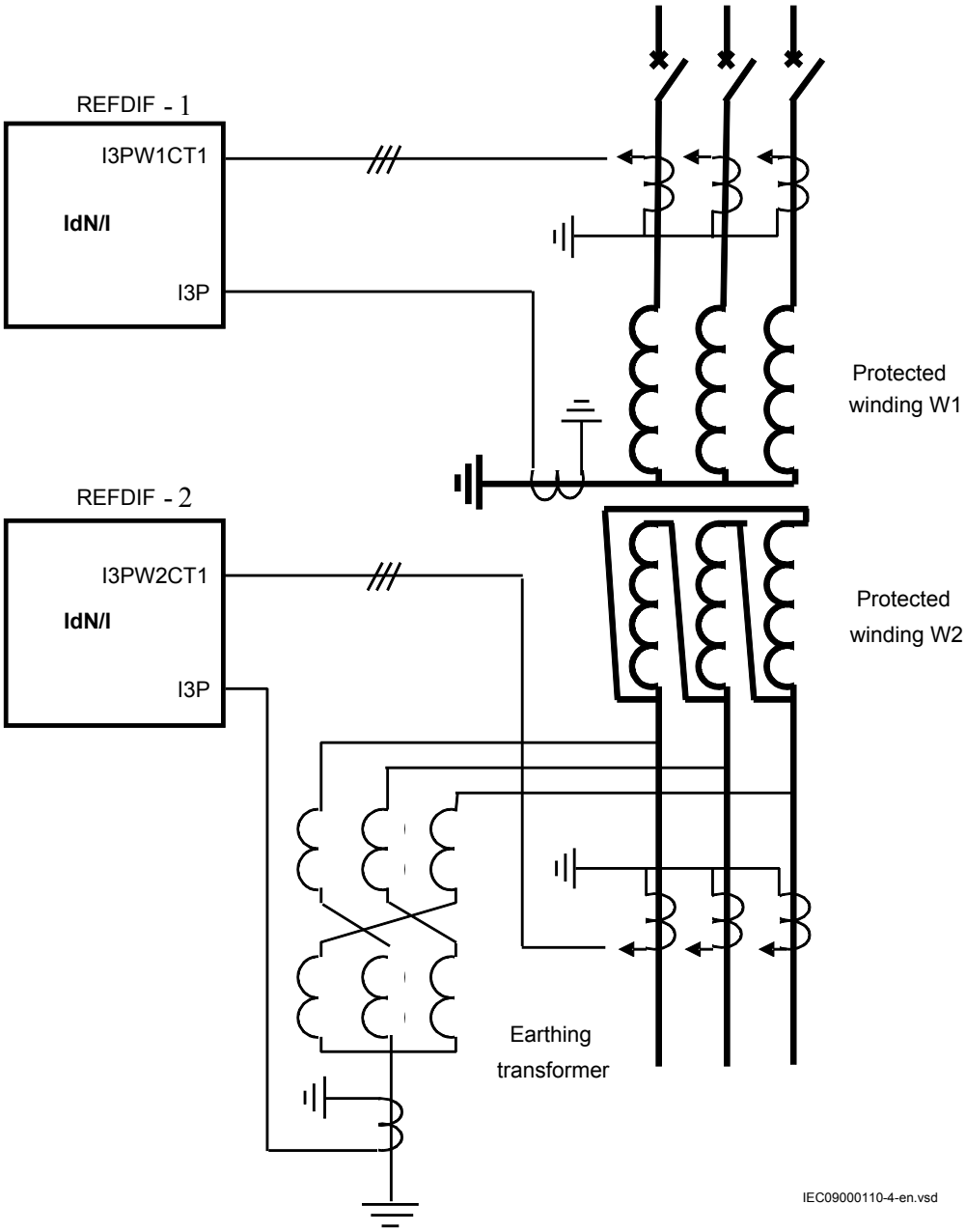

Figure 44: Connection of the low impedance Restricted earth-fault function REFPDIF for a zig-zag earthing transformer

Autotransformer winding, solidly earthed

Autotransformers can be protected with the low impedance restricted earth fault protection function REFPDIF. The complete transformer will then be protected including the HV side, the neutral connection and the LV side. The connection of a REFPDIF for this application is shown in figure 45.

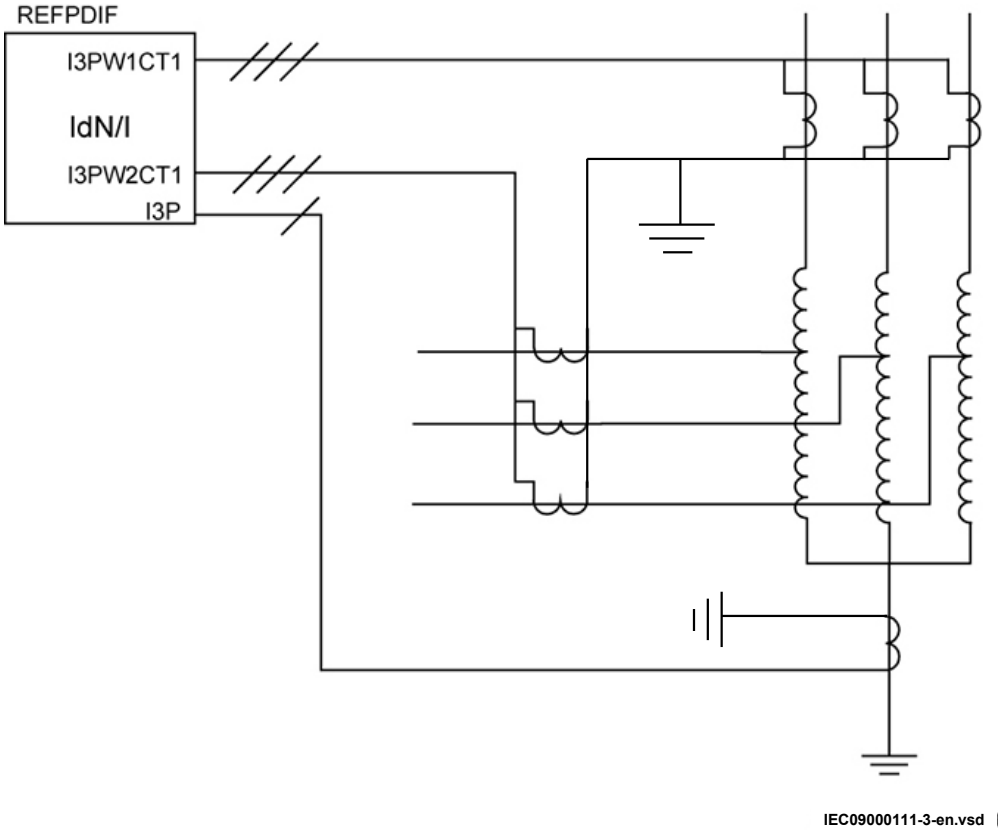

Figure 45: Connection of restricted earth fault, low impedance function REFPDIF for an autotransformer, solidly earthed

Reactor winding, solidly earthed

Reactors can be protected with the low impedance restricted earth fault protection function REFPDIF. The connection of REFPDIF for this application is shown in figure 46.

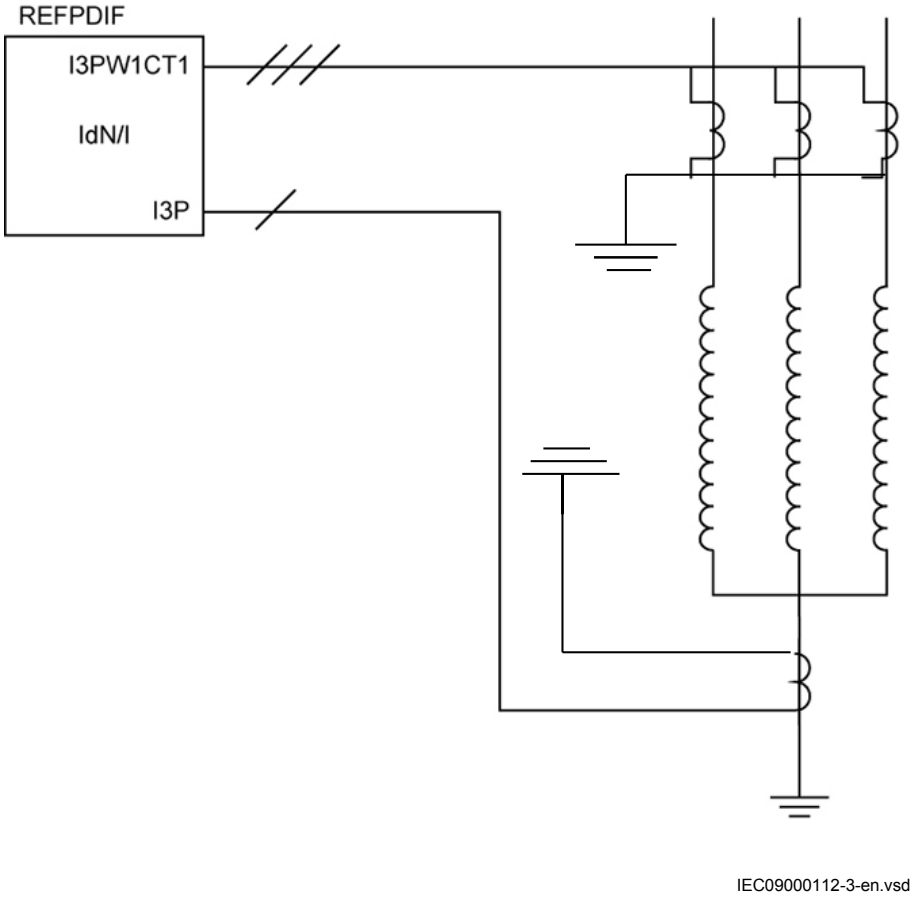

Figure 46: Connection of the low impedance restricted earth fault protection function REFPDIF for a solidly earthed reactor

CT earthing direction

To make thelow impedance restricted earth-fault protection function REFPDIF work, the main CTs are always supposed to be star connected. The main CT's neutral (star) formation can be positioned in either way, *ToObject* or *FromObject*.

6.2.3 Setting guidelines

6.2.3.1 Setting and configuration

Analog input signals

I3P: Neutral point current .

I3PW1CT1: Phase currents for winding 1.

I3PW2CT1: Phase currents for winding 2. Used only for autotransformers.

Binary input signals

BLOCK: The input will block the operation of the function. Can be used for example, to block for a limited time the operation during special service conditions.

Binary output signals

START: The start output indicates that *Idiff* is in the operate region of the characteristic. It can be used to initiate disturbance recorder.

TRIP: The trip output is activated when all operating criteria are fulfilled.

DIROK: The output is activated when the directional criteria has been fulfilled. The output can be used for information purposes normally during testing. It can be checked from the debug tool or connected as a signal to the disturbance recorder. The information is also available on the local HMI.

BLK2H: The output is activated when the function is blocked due to a too high level of second harmonics. The output can be used for information purposes normally during testing. It can be checked from the debug tool or connected as a signal to the disturbance recorder. The information is also available on the local HMI.

6.2.3.2 Settings

The parameters for the low impedance restricted earth fault protection function REFPDIF are set via the local HMI or through the Protection and Control Manager (PCM600).

GlobalBaseSel: Selects the global base value group used by the function to define (*IBase*), (*UBase*) and (*SBase*).

Operation: The operation of REFPDIF can be switched *On*/*Off*.

IdMin: The setting gives the minimum operation value. The setting is in percent of the *IBase* value. The neutral current (I3P) must always be larger than half of this value. A normal setting is 30% of power transformer-winding rated current for the solidly earthed winding.

6.3 1Ph High impedance differential protection HZPDIF

6.3.1 Identification

Function description	IEC 61850 identification	IEC 60617 identification	ANSI/IEEE C37.2 device number
1Ph High impedance differential protection	HZPDIF	*Id*	87

6.3.2 Application

The 1Ph High impedance differential protection function HZPDIF can be used as a restricted earth fault protection.

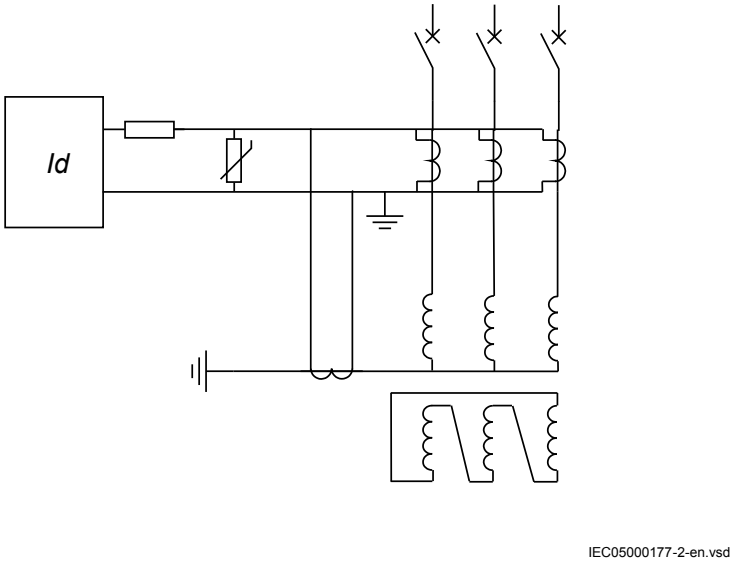

Figure 47: Application of a 1Ph High impedance differential protection HZPDIF function

6.3.2.1 The basics of the high impedance principle

The high impedance differential protection principle has been used for many years and is well documented. The operating characteristic provides very good sensitivity and high speed operation. One main benefit offered by the principle is an absolute stability (that is, non-operation) for external faults even in the presence of heavy CT saturation. The principle is based on the CT secondary current circulating between involved current transformers and not through the IED due to its high impedance, normally in the range of hundreds of ohms and sometimes above Kiloohm. When an internal fault occurs the current cannot circulate and is forced through the differential circuit causing operation.

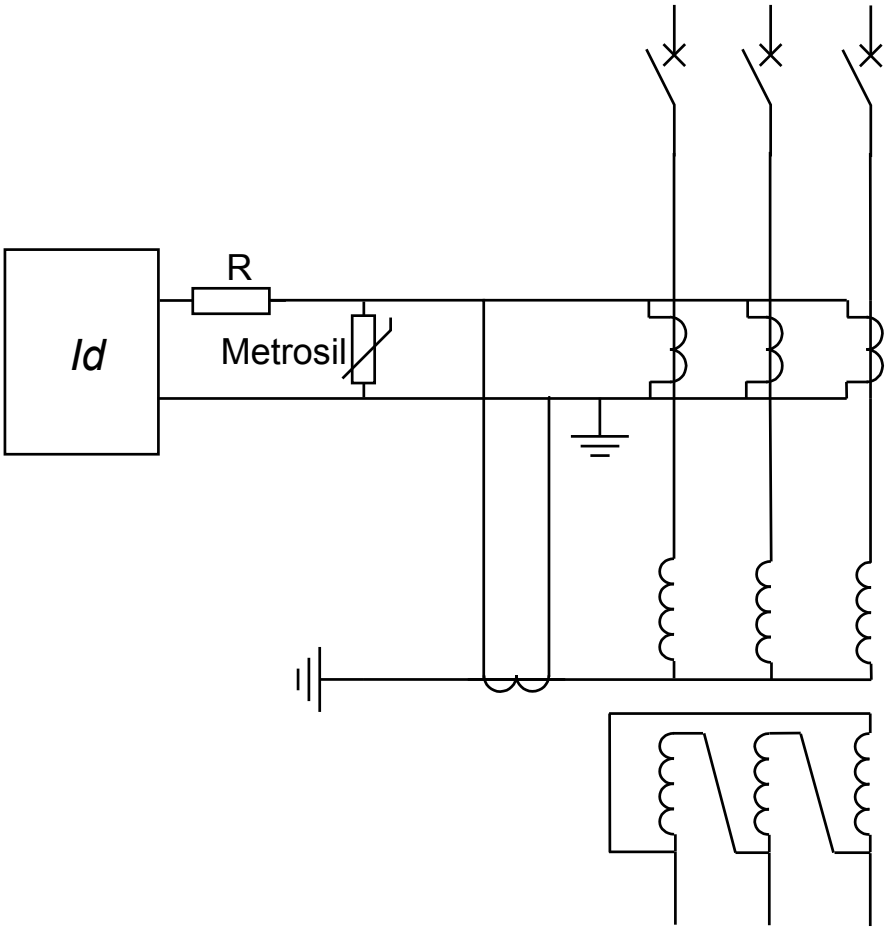

IEC05000164-2-en.vsd

Figure 48: Example for the high impedance restricted earth fault protection application

For a through fault one current transformer might saturate when the other CTs still will feed current. For such a case a voltage will be developed across the stabilising resistor. The calculations are made with the worst situations in mind and a minimum operating voltage U_R is calculated according to equation 40

$$UR > IF\max \cdot \left(Rct + Rl\right)$$

(Equation 40)

where:

*IF*max	is the maximum through fault current at the secondary side of the CT
Rct	is the current transformer secondary resistance and
Rl	is the maximum loop resistance of the circuit at any CT.

The minimum operating voltage has to be calculated (all loops) and the function is set higher than the highest achieved value (setting *U>Trip*). As the loop resistance is the value to the connection point from each CT, it is advisable to do all the CT core summations in the switchgear to have shortest possible loops. This will give lower setting values and also a better balanced scheme. The connection in to the control room can then be from the most central bay.

For an internal fault, circulation is not possible, due to the high impedance. Depending on the size of current transformer, relatively high voltages will be developed across the series resistor. Note that very high peak voltages can appear. To prevent the risk of flashover in the circuit, a voltage limiter must be included. The voltage limiter is a voltage dependent resistor (Metrosil).

The external unit with stabilizing resistor has a value of either 6800 ohms or 1800 ohms (depending on ordered alternative) with a shorting link to allow adjustment to the required value. Select a suitable value of the resistor based on the UR voltage calculated. A higher resistance value will give a higher sensitivity and a lower value a lower sensitivity.

The function has a recommended operating current range 40 mA to 1.0A for 1 A inputs and 200 mA to 5A for 5A inputs. This, together with the selected and set value, is used to calculate the required value of current at the set *U>Trip* and *SeriesResitor* values.

The CT inputs used for 1Ph High impedance differential protection HZPDIF function, shall be set to have ratio 1:1. So the parameters CT_{secx} and CT_{primx} of the relevant channel x of TRM and/or AIM shall be set equal to 1 A by PST in PCM600; The parameter *CTStarPointx* may be set to *ToObject*.

The tables 12, 13 below show, the operating currents for different settings of operating voltages and selected resistances. Adjust as required based on tables 12, 13 or to values in between as required for the application.

Minimum ohms can be difficult to adjust due to the small value compared to the total value.

Normally the voltage can be increased to higher values than the calculated minimum *U>Trip* with a minor change of total operating values as long as this is done by adjusting the resistor to a higher value. Check the sensitivity calculation below for reference.

Table 12: 1 A channels: input with minimum operating down to 20 mA

Operating voltage *U>Trip*	Stabilizing resistor R ohms	Operating current level 1 A	Stabilizing resistor R ohms	Operating current level 1 A	Stabilizing resistor R ohms	Operating current level 1 A
20 V	1000	0.020 A	--	--	--	--
40 V	2000	0.020 A	1000	0.040 A	--	--
60 V	3000	0.020 A	1500	0.040 A	600	0.100 A
80 V	4000	0.020 A	2000	0.040 A	800	0.100 A
100 V	5000	0.020 A	2500	0.040 A	1000	0.100 A
150 V	6000	0.020 A	3750	0.040 A	1500	0.100 A
200 V	6800	0.029 A	5000	0.040 A	2000	0.100 A

Table 13: 5 A channels: input with minimum operating down to 100 mA

Operating voltage *U>Trip*	Stabilizing resistor R1 ohms	Operating current level 5 A	Stabilizing resistor R1 ohms	Operating current level 5 A	Stabilizing resistor R1 ohms	Operating current level 5 A
20 V	200	0.100 A	100	0.200 A	--	--
40 V	400	0.100 A	200	0.200 A	100	0.400
60 V	600	0.100 A	300	0.200 A	150	0.400 A
80 V	800	0.100 A	400	0.200 A	200	0.400 A
100 V	1000	0.100 A	500	0.200 A	250	0.400 A
150 V	1500	0.100 A	750	0.200 A	375	0.400 A
200 V	2000	0.100 A	1000	0.200 A	500	0.400 A

The current transformer saturating voltage must be at least 2 · *U>Trip* to have sufficient operating margin. This must be checked after calculation of *U>Trip*.

When the R value has been selected and the *U>Trip* value has been set, the sensitivity of the scheme *IP* can be calculated. The sensitivity is decided by the total current in the circuit according to equation 41.

$$IP = n \cdot (IR + Ires + \sum lmag)$$

(Equation 41)

where:

n	is the CT ratio
IP	primary current at IED pickup,
IR	IED pickup current
Ires	is the current through the non-linear resistorand
ΣImag	is the sum of the magnetizing currents from all CTs in the circuit (for example, 4 CTs for restricted earth fault protection, 2 CTs for reactor differential protection, 3-5 CTs for autotransformer differential protection , the number of feeders, including the buscoupler, for busbar differential protection).

It should be remembered that the vectorial sum of the currents must be used (IEDs, Metrosil and resistor currents are resistive). The current measurement is insensitive to DC component in fault current to allow a use of only the AC components of the fault current in the above calculations.

The voltage dependent resistor (Metrosil) characteristic is shown in figure 52.

A shunt can be added in parallel to the non-linear resistor in order to desensitize the function.

Series resistor thermal capacity

The series resistor is dimensioned for 200 W. Preferable the $U>Trip^2/SeriesResistor$ should always be lower than 200 W to allow continuous activation on during testing. If this value is exceeded, testing should be done with transient faults.

The series resistor is dimensioned for 200 W. The condition: $U>Trip^2/SeriesResistor$ shall be fulfilled. In this condition the continuous injection is allowed during testing.

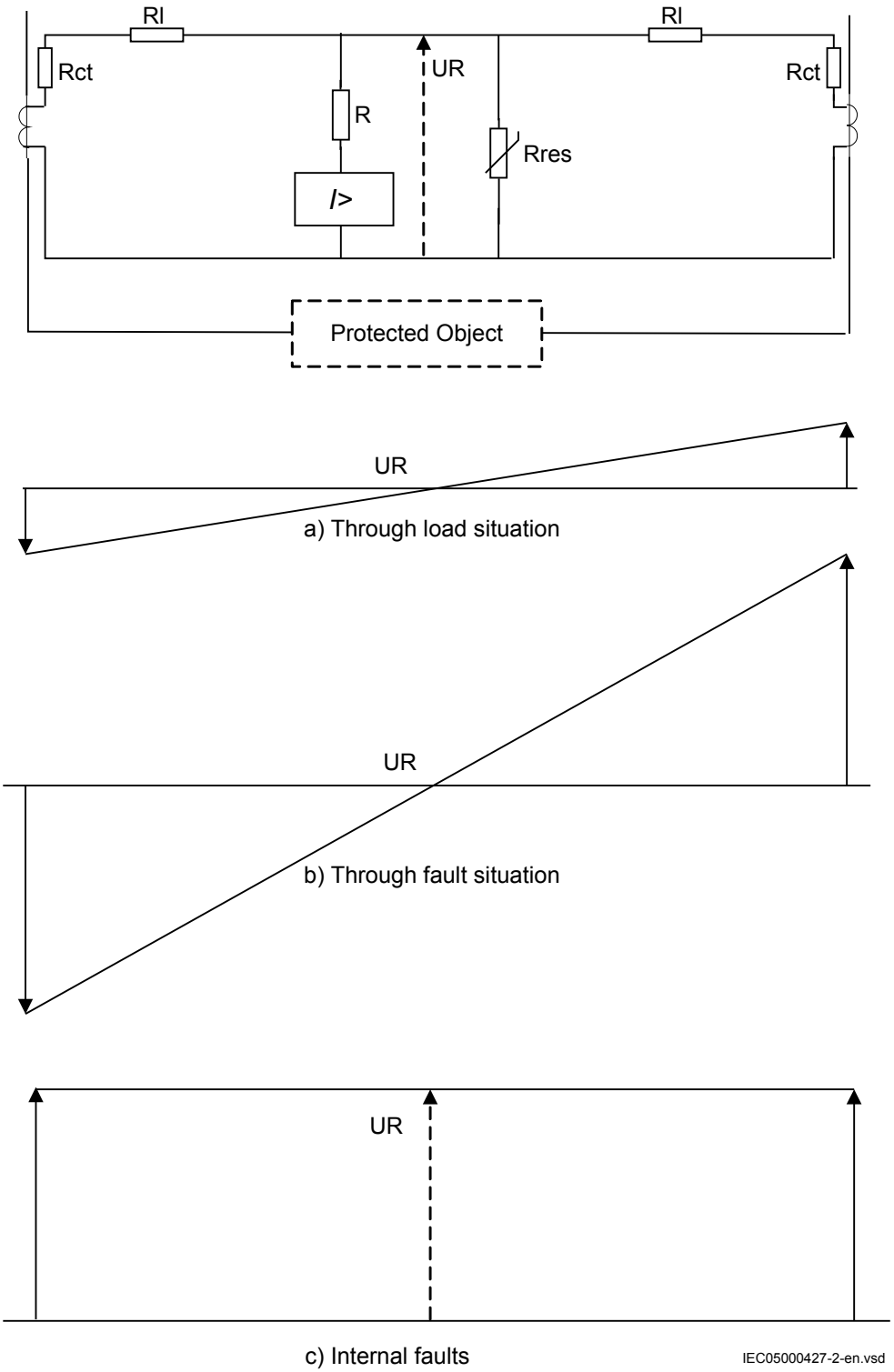

Figure 49: The high impedance principle for one phase with two current transformer inputs

6.3.3 Connection examples for high impedance differential protection

WARNING! USE EXTREME CAUTION! Dangerously high voltages might be present on this equipment, especially on the plate with resistors. Do any maintenance ONLY if the primary object protected with this equipment is de-energized. If required by national law or standard, enclose the plate with resistors with a protective cover or in a separate box.

6.3.3.1 Connections for 1Ph restricted earth fault and high impedance differential protection

Restricted earth fault protection REFis a typical application for 1Ph High impedance differential protection HZPDIF. Typical CT connections for high impedance based REF protection scheme are shown in figure 50.

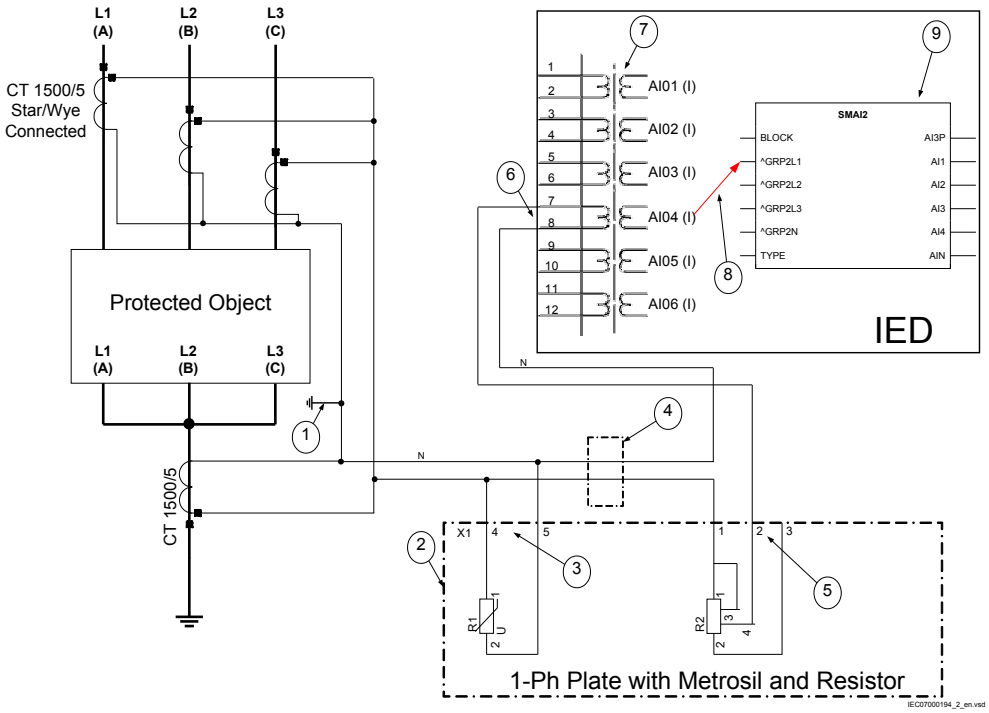

Figure 50: CT connections for restricted earth fault protection

Pos	Description
1	Scheme earthing point

Note that it is of outmost importance to insure that only one earthing point exist in such scheme.

2 One-phase plate with stabilizing resistor and metrosil.

3 Necessary connection for the metrosil. Shown connections are applicable for both types of one-phase plate.

4 Position of optional test switch for secondary injection into the high impedance differential IED.

5 Necessary connection for stabilizing resistor. Shown connections are applicable for both types of one-phase plate.

6 How to connect REFPDIF high impedance scheme to one CT input in IED.

7 Transformer input module where this current input is located.

Note that the CT ratio for high impedance differential protection application must be set as one.

- For main CTs with 1A secondary rating the following setting values shall be entered: *CTprim* = *1A* and *CTsec* = *1A*
- For main CTs with 5A secondary rating the following setting values shall be entered: *CTprim* = *5A* and *CTsec* = *5A*
- The parameter *CTStarPoint* shall always be left to the default value *ToObject*

8 Connection made in the Signal Matrix, which connects this current input to first input channel of the preprocessing function block (9). For high impedance differential protection preprocessing function block in 3ms task shall be used.

9 Preprocessing block, which has a task to digitally filter the connected analogue inputs. Preprocessing block output AI1 shall be connected to one instances of 1Ph high impedance differential protection function HZPDIF (for example, instance 1 of HZPDIF in the configuration tool).

6.3.4 Setting guidelines

The setting calculations are individual for each application. Refer to the different application descriptions below.

6.3.4.1 Configuration

The configuration is done in the Application Configuration tool. For example, signals from external check criteria shall be connected to the inputs as required for the application.

BLOCK input is used to block the function for example, from external check criteria.

BLKTR input is used to block the function tripping for example, from external check criteria. The alarm level will be operative.

6.3.4.2 Settings of protection function

Operation: The operation of the high impedance differential function can be switched *On* or *Off*.

U>Alarm: Set the alarm level. The sensitivity can roughly be calculated as a divider from the calculated sensitivity of the differential level. A typical setting is 10% of *U>Trip* It can be used as scheme supervision stage.

tAlarm: Set the time for the alarm. A typical setting is 2-3 seconds.

U>Trip: Set the trip level according to the calculations in the examples for each application example. The level is selected with margin to the calculated required voltage to achieve stability. Values can be 20-200 V dependent on the application.

SeriesResistor: Set the value of the stabilizing series resistor. Calculate the value according to the examples for each application. Adjust the resistor as close as possible to the calculated example. Measure the value achieved and set this value here.

The value shall always be high impedance. This means for example, for 1A circuits say bigger than 400 ohms (400 VA) and for 5 A circuits say bigger than 100 ohms (2500 VA). This ensures that the current will circulate and not go through the differential circuit at through faults.

6.3.4.3 Restricted earth fault protection REFPDIF

For solidly earthed systems a Restricted earth fault protection REF is often provided as a complement to the normal transformer differential IED. The advantage with the restricted earth fault IEDs is their high sensitivity. Sensitivities of 2-8% can be achieved whereas the normal differential IED will have sensitivities of 20-40%. The level for high impedance restricted earth fault function is dependent of the current transformers magnetizing currents.

Restricted earth fault IEDs are also very quick due to the simple measuring principle and the measurement of one winding only.

The connection of a restricted earth fault IED is shown in figure 51. It is connected across each directly or low ohmic earthed transformer winding in figure 51.

It is quite common to connect the restricted earth fault IED in the same current circuit as the transformer differential IED. This will due to the differences in measuring principle limit the possibility for the differential IEDs to detect earth faults. Such faults are then only detected by REF function. The mixed connection using the 1Ph High impedance differential protection HZPDIF function should be avoided and the low impedance scheme should be used instead.

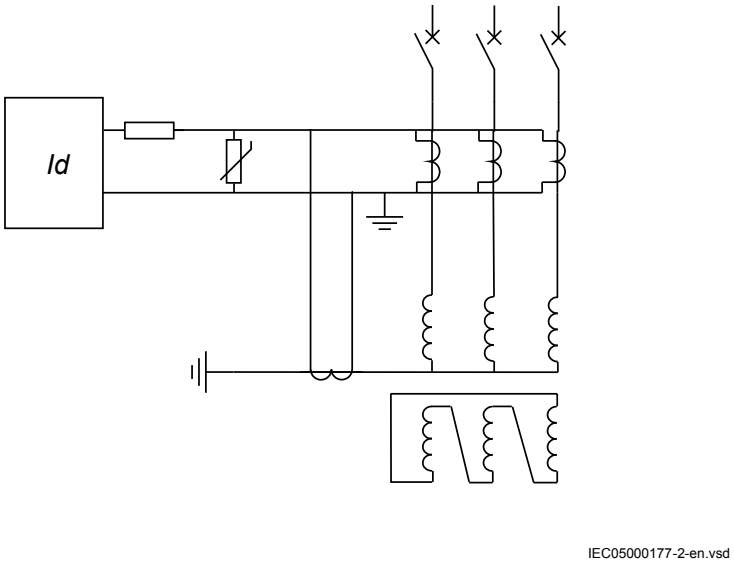

Figure 51: Application of HZPDIF function as a restricted earth fault IED for an YNd transformer

Setting example

It is strongly recommended to use the highest tap of the CT whenever high impedance protection is used. This helps in utilizing maximum CT capability, minimize the current, thereby reducing the stability voltage limit. Another factor is that during internal faults, the voltage developed across the selected tap is limited by the non-linear resistor but in the unused taps, owing to auto-transformer action, voltages much higher than design limits might be induced.

Basic data:	
Transformer rated current on HV winding:	250 A
Current transformer ratio:	300/1 A (Note: Must be the same at all locations)
CT Class:	10 VA 5P20
Cable loop resistance:	<50 m 2.5mm^2 (one way) gives 2 · 0.4 ohm at 75° C
Max fault current:	The maximum through fault current is limited by the transformer reactance, use 15 · rated current of the transformer

Calculation:

$$UR > 15 \cdot \frac{250}{300} \cdot \left(0.66 + 0.8\right) = 18.25V$$

(Equation 42)

Select a setting of *U>Trip*=20 V.

The current transformer saturation voltage at 5% error can roughly be calculated from the rated values.

$$E5P > \left(10 + 0.66\right) \cdot 20 = 213.2V$$

(Equation 43)

that is, greater than 2 · *U>Trip*

Check from the table of selected resistances the required series stabilizing resistor value to use. As this application it is required to be so sensitive so select *SeriesResistor*= 1000 ohm which gives a current of 20 mA.

To calculate the sensitivity at operating voltage, refer to equation 44 which is acceptable as it gives around 10% minimum operating current.

$$IP = \frac{300}{1} \cdot \left(20\underline{|0°} + 5\underline{|0°} + 4 \cdot 20\underline{|-60°}\right) \leq approx.25.5A$$

(Equation 44)

The magnetizing current is taken from the magnetizing curve for the current transformer cores which should be available. The value at *U>Trip* is taken. For the voltage dependent resistor current the top value of voltage 20 · √2 is used and the top current used. Then the RMS current is calculated by dividing with√2. Use the maximum value from the curve.

6.3.4.4 Alarm level operation

The 1Ph High impedance differential protection HZPDIF function has a separate alarm level, which can be used to give alarm for problems with an involved current transformer circuit. The setting level is normally selected to be around 10% of the operating voltage *U>Trip*.

The setting of U> Alarm is related to the value of the stabilizing resistor and the minimum current sensitivity. The setting example shows the calculation procedure of the setting value of U> Alarm.

As seen in the setting examples above the sensitivity of HZPDIF function is normally high, which means that the function will in many cases operate also for short circuits or open current transformer secondary circuits. However the stabilizing resistor can be selected to achieve sensitivity higher than normal load

current and/or separate criteria can be added to the operation, a check zone. This can be either another IED, with the same HZPDIF function, or be a check about the fault condition, which is performed by an earth overcurrent function or neutral point voltage function.

For such cases where operation is not expected during normal service the alarm output should be used to activate an external shorting of the differential circuit avoiding continuous high voltage in the circuit. A time delay of a few seconds is used before the shorting and alarm are activated. Auxiliary relays with contacts that can withstand high voltage shall be used, like RXMVB types. Use auxiliary relays with contacts that can withstand high voltages for example, RXMVB types.

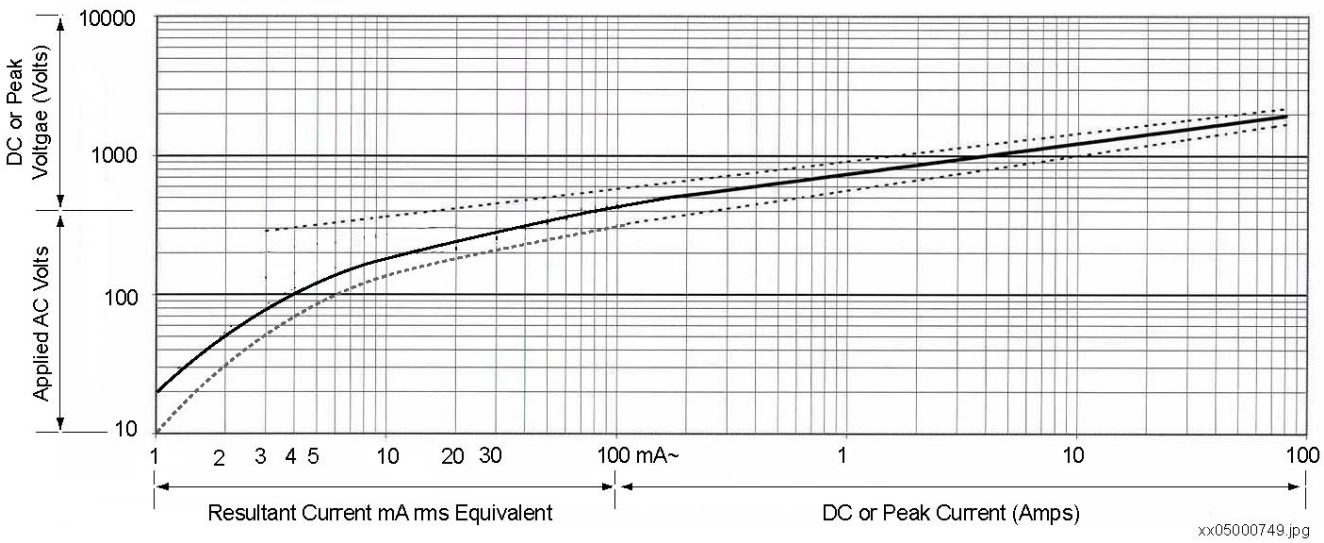

Figure 52: Current voltage characteristics for the non-linear resistors, in the range 10-200 V, the average range of current is: 0.01–10 mA

Section 7 Current protection

7.1 Instantaneous phase overcurrent protection 3-phase output PHPIOC

7.1.1 Identification

Function description	IEC 61850 identification	IEC 60617 identification	ANSI/IEEE C37.2 device number
Instantaneous phase overcurrent protection 3-phase output	PHPIOC	*3I>>*	50

7.1.2 Application

Long transmission lines often transfer great quantities of electric power from production to consumption areas. The unbalance of the produced and consumed electric power at each end of the transmission line is very large. This means that a fault on the line can easily endanger the stability of a complete system.

The transient stability of a power system depends mostly on three parameters (at constant amount of transmitted electric power):

- The type of the fault. Three-phase faults are the most dangerous, because no power can be transmitted through the fault point during fault conditions.
- The magnitude of the fault current. A high fault current indicates that the decrease of transmitted power is high.
- The total fault clearing time. The phase angles between the EMFs of the generators on both sides of the transmission line increase over the permitted stability limits if the total fault clearing time, which consists of the protection operating time and the breaker opening time, is too long.

The fault current on long transmission lines depends mostly on the fault position and decreases with the distance from the generation point. For this reason the protection must operate very quickly for faults very close to the generation (and relay) point, for which very high fault currents are characteristic.

The instantaneous phase overcurrent protection 3-phase output PHPIOC can operate in 10 ms for faults characterized by very high currents.

7.1.3 Setting guidelines

The parameters for instantaneous phase overcurrent protection 3-phase output PHPIOC are set via the local HMI or PCM600.

This protection function must operate only in a selective way. So check all system and transient conditions that could cause its unwanted operation.

Only detailed network studies can determine the operating conditions under which the highest possible fault current is expected on the line. In most cases, this current appears during three-phase fault conditions. But also examine single-phase-to-earth and two-phase-to-earth conditions.

Also study transients that could cause a high increase of the line current for short times. A typical example is a transmission line with a power transformer at the remote end, which can cause high inrush current when connected to the network and can thus also cause the operation of the built-in, instantaneous, overcurrent protection.

GlobalBaseSel: Selects the global base value group used by the function to define (*IBase*), (*UBase*) and (*SBase*).

IP>>: Set operate current in % of *IBase*.

7.1.3.1 Meshed network without parallel line

The following fault calculations have to be done for three-phase, single-phase-to-earth and two-phase-to-earth faults. With reference to figure 53, apply a fault in B and then calculate the current through-fault phase current I_{fB}. The calculation should be done using the minimum source impedance values for Z_A and the maximum source impedance values for Z_B in order to get the maximum through fault current from A to B.

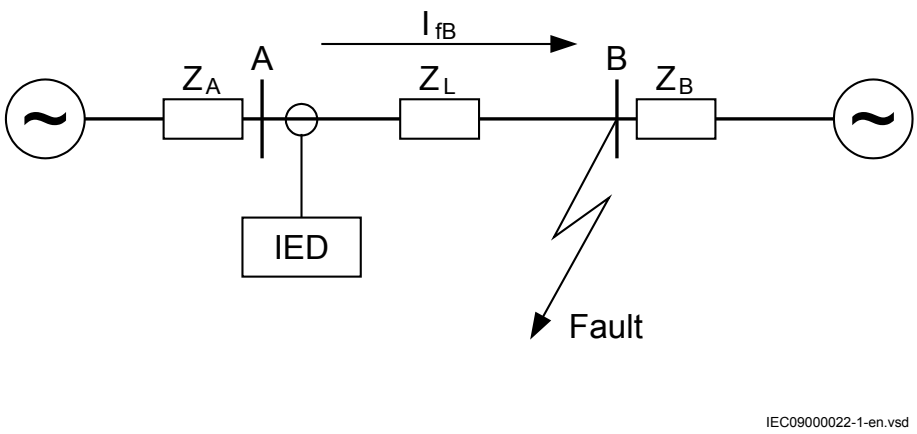

Figure 53: Through fault current from A to B: I_{fB}

Then a fault in A has to be applied and the through fault current I_{fA} has to be calculated, figure 54. In order to get the maximum through fault current, the minimum value for Z_B and the maximum value for Z_A have to be considered.

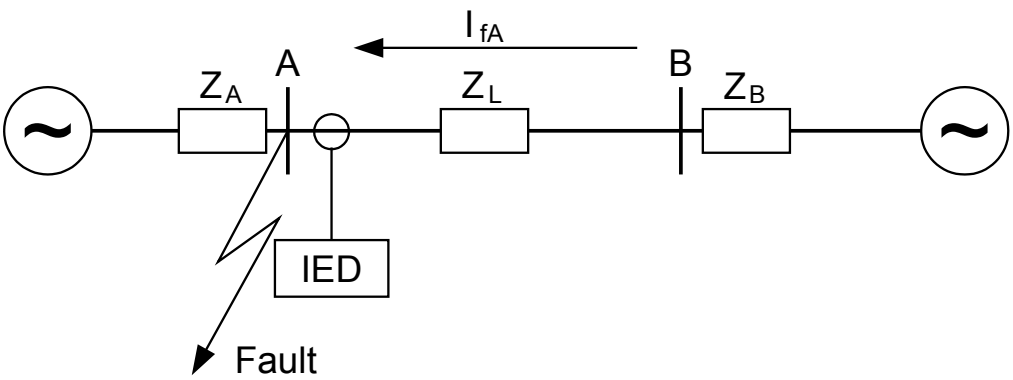

IEC09000023-1-en.vsd

Figure 54: Through fault current from B to A: I_{fA}

The IED must not trip for any of the two through-fault currents. Hence the minimum theoretical current setting (Imin) will be:

$$Imin \geq MAX(I_{fA}, I_{fB})$$

(Equation 45)

A safety margin of 5% for the maximum protection static inaccuracy and a safety margin of 5% for the maximum possible transient overreach have to be introduced. An additional 20% is suggested due to the inaccuracy of the instrument transformers under transient conditions and inaccuracy in the system data.

The minimum primary setting (Is) for the instantaneous phase overcurrent protection 3-phase output is then:

$$Is \geq 1.3.Imin$$

(Equation 46)

The protection function can be used for the specific application only if this setting value is equal to or less than the maximum fault current that the IED has to clear, I_F in figure 55.

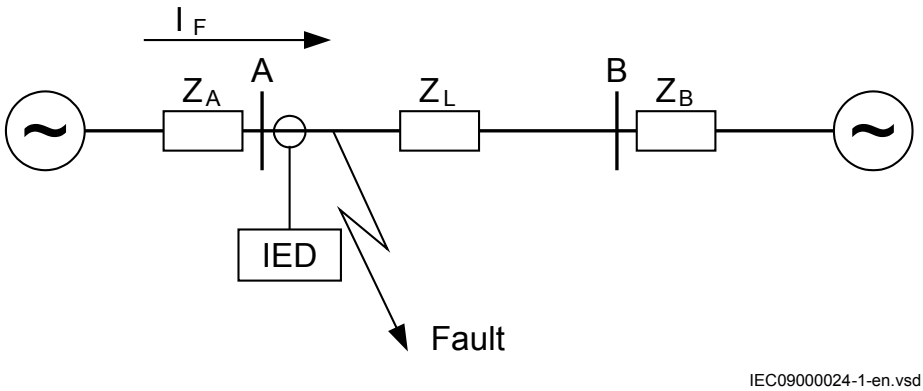

Figure 55: Fault current: I_F

$$IP >>= \frac{Is}{IBase} \cdot 100$$

(Equation 47)

7.1.3.2 Meshed network with parallel line

In case of parallel lines, the influence of the induced current from the parallel line to the protected line has to be considered. One example is given in figure 56 where the two lines are connected to the same busbars. In this case the influence of the induced fault current from the faulty line (line 1) to the healthy line (line 2) is considered together with the two through fault currents I_{fA} and I_{fB} mentioned previously. The maximal influence from the parallel line for the IED in figure 56 will be with a fault at the C point with the C breaker open.

A fault in C has to be applied, and then the maximum current seen from the IED (I_M) on the healthy line (this applies for single-phase-to-earth and two-phase-to-earth faults) is calculated.

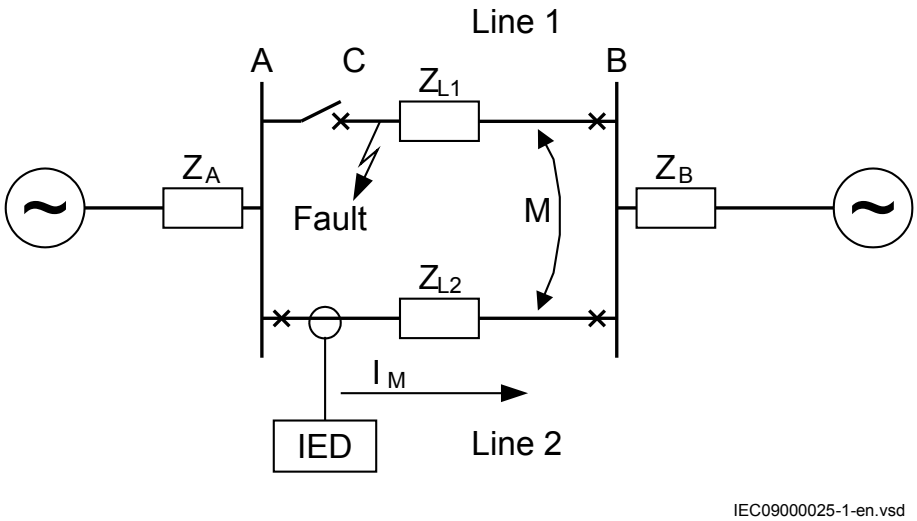

Figure 56: Two parallel lines. Influence from parallel line to the through fault current: I_M

The minimum theoretical current setting for the overcurrent protection function (Imin) will be:

$$Imin \geq MAX(I_{fA}, I_{fB}, I_M)$$

(Equation 48)

Where I_{fA} and I_{fB} have been described in the previous paragraph. Considering the safety margins mentioned previously, the minimum setting (Is) for the instantaneous phase overcurrent protection 3-phase output is then:

$$Is \geq 1.3 \cdot Imin$$

(Equation 49)

The protection function can be used for the specific application only if this setting value is equal or less than the maximum phase fault current that the IED has to clear.

The IED setting value *IP>>* is given in percentage of the primary base current value, *IBase*. The value for *IP>>* is given from this formula:

$$IP >> = \frac{Is}{IBase} \cdot 100$$

(Equation 50)

7.2 Four step phase overcurrent protection 3-phase output OC4PTOC

7.2.1 Identification

Function description	IEC 61850 identification	IEC 60617 identification	ANSI/IEEE C37.2 device number
Four step phase overcurrent protection 3-phase output	OC4PTOC	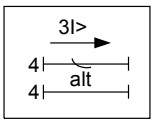	51/67

7.2.2 Application

The Four step phase overcurrent protection 3-phase output OC4PTOC is used in several applications in the power system. Some applications are:

- Short circuit protection of feeders in distribution and subtransmission systems. Normally these feeders have radial structure.
- Back-up short circuit protection of transmission lines.
- Back-up short circuit protection of power transformers.
- Short circuit protection of different kinds of equipment connected to the power system such as; shunt capacitor banks, shunt reactors, motors and others.
- Back-up short circuit protection of power generators.

If VT inputs are not available or not connected, setting parameter *DirModex* (*x* = step 1, 2, 3 or 4) shall be left to default value *Non-directional*or set to *Off*.

In many applications several steps with different current pick up levels and time delays are needed. OC4PTOC can have up to four different, individual settable, steps. The flexibility of each step of OC4PTOC is great. The following options are possible:

Non-directional / Directional function: In most applications the non-directional functionality is used. This is mostly the case when no fault current can be fed from the protected object itself. In order to achieve both selectivity and fast fault clearance, the directional function can be necessary.

Choice of delay time characteristics: There are several types of delay time characteristics available such as definite time delay and different types of inverse time delay characteristics. The selectivity between different overcurrent protections is normally enabled by co-ordination between the function time delays of the different protections. To enable optimal co-ordination between all overcurrent

protections, they should have the same time delay characteristic. Therefore a wide range of standardized inverse time characteristics are available: IEC and ANSI.

The time characteristic for step 1 and 4 can be chosen as definite time delay or inverse time characteristic. Step 2 and 3 are always definite time delayed and are used in system where IDMT is not needed.

Power transformers can have a large inrush current, when being energized. This phenomenon is due to saturation of the transformer magnetic core during parts of the period. There is a risk that inrush current will reach levels above the pick-up current of the phase overcurrent protection. The inrush current has a large 2nd harmonic content. This can be used to avoid unwanted operation of the protection. Therefore, OC4PTOC have a possibility of 2nd harmonic restrain if the level of this harmonic current reaches a value above a set percentage of the fundamental current.

7.2.3 Setting guidelines

The parameters for Four step phase overcurrent protection 3-phase output OC4PTOC are set via the local HMI or PCM600.

The following settings can be done for OC4PTOC.

GlobalBaseSel: Selects the global base value group used by the function to define (*IBase*), (*UBase*) and (*SBase*).

MeasType: Selection of discrete Fourier filtered (*DFT*) or true RMS filtered (*RMS*) signals. *RMS* is used when the harmonic contents are to be considered, for example in applications with shunt capacitors.

Operation: The protection can be set to *Off* or *On*

2ndHarmStab: Operate level of 2nd harmonic current restrain set in % of the fundamental current. The setting range is *5 - 100*% in steps of 1%. Default setting is 20%.

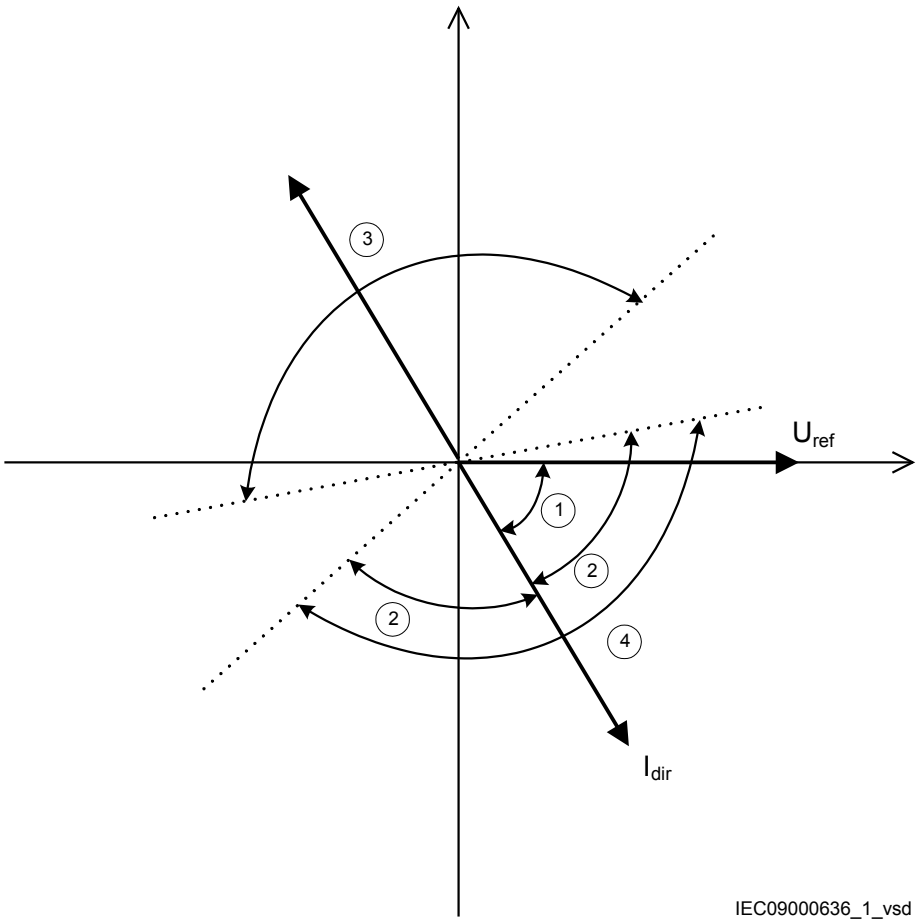

Figure 57: Directional function characteristic

1. RCA = Relay characteristic angle 55°
2. ROA = Relay operating angle 80°
3. Reverse
4. Forward

7.2.3.1 Settings for steps 1 to 4

n means step 1 and 4. *x* means step 1, 2, 3 and 4.

DirModex: The directional mode of step *x*. Possible settings are *Off*/*Non-directional*/*Forward*/*Reverse*.

Characteristn: Selection of time characteristic for step *n*. Definite time delay and different types of inverse time characteristics are available according to table 14. Step 2 and 3 are always definite time delayed.

Table 14: Inverse time characteristics

Curve name
ANSI Extremely Inverse
ANSI Very Inverse
ANSI Normal Inverse
ANSI Moderately Inverse
ANSI/IEEE Definite time
ANSI Long Time Extremely Inverse
ANSI Long Time Very Inverse
ANSI Long Time Inverse
IEC Normal Inverse
IEC Very Inverse
IEC Inverse
IEC Extremely Inverse
IEC Short Time Inverse
IEC Long Time Inverse
IEC Definite Time
ASEA RI
RXIDG (logarithmic)

The different characteristics are described in Technical manual.

Ix>: Operate phase current level for step *x* given in % of *IBase*.

tx: Definite time delay for step *x*. Used if definite time characteristic is chosen.

kn: Time multiplier for inverse time delay for step *n*.

IMinn: Minimum operate current for step *n* in % of *IBase*. Set *IMinn* below *Ix>* for every step to achieve ANSI reset characteristic according to standard. If *IMinn* is set above *Ix>* for any step the ANSI reset works as if current is zero when current drops below *IMinn*.

tnMin: Minimum operate time for all inverse time characteristics. At high currents the inverse time characteristic might give a very short operation time. By setting this parameter the operation time of the step can never be shorter than the setting. Setting range: 0.000 - 60.000s in steps of 0.001s.

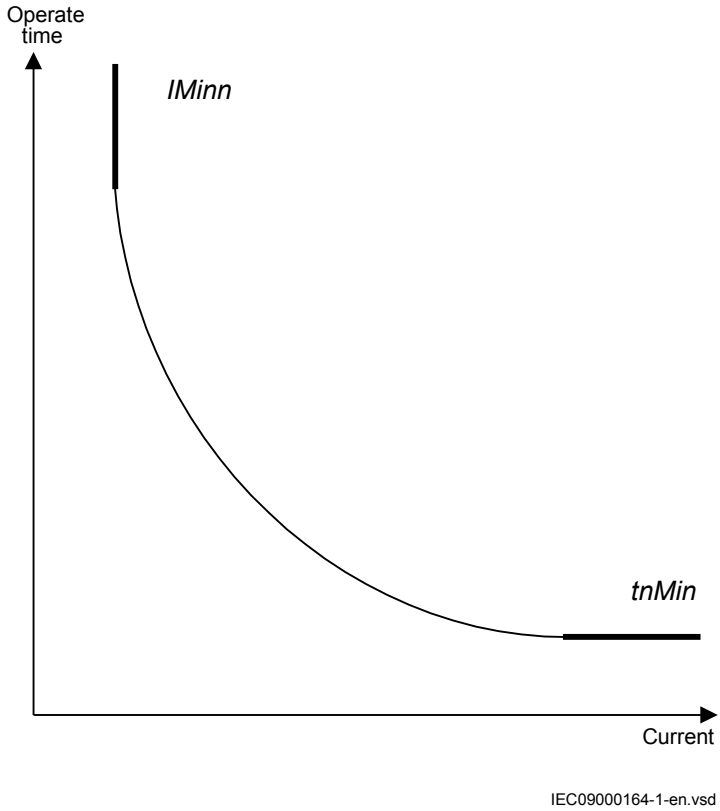

Figure 58: Minimum operate current and operation time for inverse time characteristics

In order to fully comply with curves definition setting parameter *tnMin* shall be set to the value, which is equal to the operating time of the selected inverse curve for measured current of twenty times the set current pickup value. Note that the operating time value is dependent on the selected setting value for time multiplier *kn*.

HarmRestrainx: Enable block of step *n* from the harmonic restrain function (2nd harmonic). This function should be used when there is a risk if power transformer inrush currents might cause unwanted trip. Can be set *Off*/*On*.

7.2.3.2 2nd harmonic restrain

If a power transformer is energized there is a risk that the transformer core will saturate during part of the period, resulting in an inrush transformer current. This will give a declining residual current in the network, as the inrush current is deviating between the phases. There is a risk that the phase overcurrent function will give an unwanted trip. The inrush current has a relatively large ratio of 2nd harmonic component. This component can be used to create a restrain signal to prevent this unwanted function.

The settings for the 2nd harmonic restrain are described below.

2ndHarmStab: The rate of 2nd harmonic current content for activation of the 2nd harmonic restrain signal, to block chosen steps. The setting is given in % of the fundamental frequency residual current. The setting range is *5 - 100*% in steps of 1%. The default setting is 20% and can be used if a deeper investigation shows that no other value is needed..

HarmRestrainx: This parameter can be set *Off/On*, to disable or enable the 2nd harmonic restrain.

The four step phase overcurrent protection 3-phase output can be used in different ways, depending on the application where the protection is used. A general description is given below.

The operating current setting inverse time protection or the lowest current step constant inverse time protection must be given a current setting so that the highest possible load current does not cause protection operation. Here consideration also has to be taken to the protection reset current, so that a short peak of overcurrent does not cause operation of the protection even when the overcurrent has ceased. This phenomenon is described in figure 59.

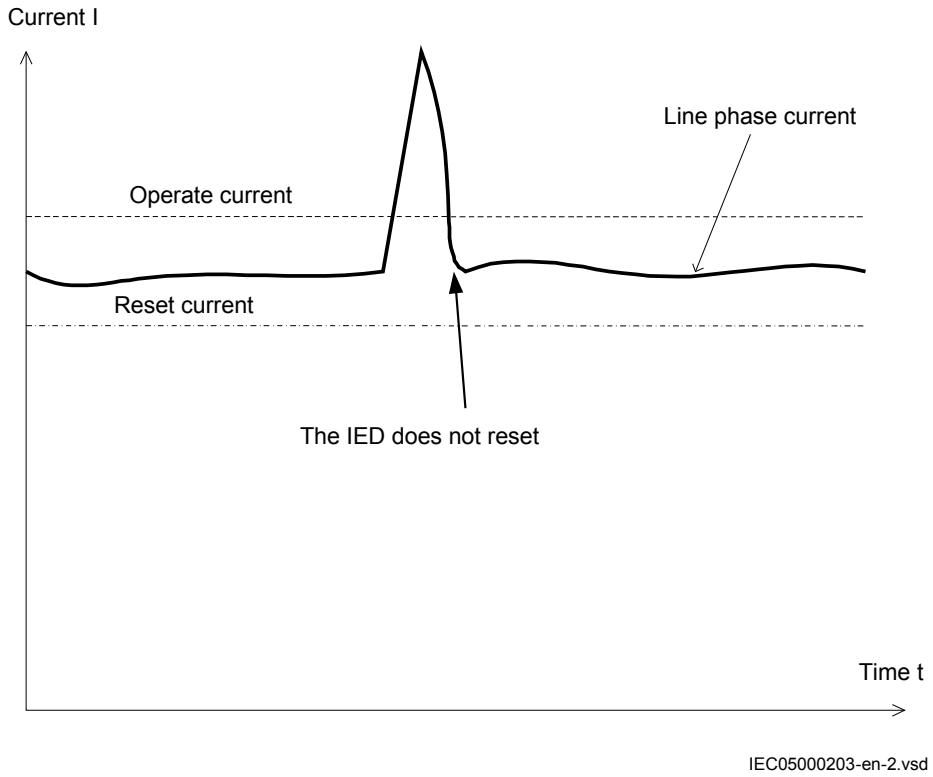

Figure 59: Operate and reset current for an overcurrent protection

The lowest setting value can be written according to equation 51.

$$Ipu \geq 1.2 \cdot \frac{Imax}{k}$$

(Equation 51)

where:

1.2	is a safety factor,
k	is the resetting ratio of the protection
Imax	is the maximum load current.

The maximum load current on the line has to be estimated. There is also a demand that all faults, within the zone that the protection shall cover, must be detected by the phase overcurrent protection. The minimum fault current Iscmin, to be detected by the protection, must be calculated. Taking this value as a base, the highest pick up current setting can be written according to equation 52.

$$Ipu \leq 0.7 \cdot Iscmin$$

(Equation 52)

where:

0.7	is a safety factor
Iscmin	is the smallest fault current to be detected by the overcurrent protection.

As a summary the operating current shall be chosen within the interval stated in equation 53.

$$1.2 \cdot \frac{Imax}{k} \leq Ipu \leq 0.7 \cdot Iscmin$$

(Equation 53)

The high current function of the overcurrent protection, which only has a short delay of the operation, must be given a current setting so that the protection is selective to other protection in the power system. It is desirable to have a rapid tripping of faults within as large portion as possible of the part of the power system to be protected by the protection (primary protected zone). A fault current calculation gives the largest current of faults, Iscmax, at the most remote part of the primary protected zone. Considerations have to be made to the risk of transient overreach, due to a possible DC component of the short circuit current. The lowest current setting of the most rapid stage, of the phase overcurrent protection, can be written according to

$$I_{high} \geq 1.2 \cdot k_t \cdot I_{sc\max}$$

(Equation 54)

where:

1.2 is a safety factor,

k_t is a factor that takes care of the transient overreach due to the DC component of the fault current and can be considered to be less than 1.1

Iscmax is the largest fault current at a fault at the most remote point of the primary protection zone.

The operate times of the phase overcurrent protection has to be chosen so that the fault time is so short that protected equipment will not be destroyed due to thermal overload, at the same time as selectivity is assured. For overcurrent protection, in a radial fed network, the time setting can be chosen in a graphical way. This is mostly used in the case of inverse time overcurrent protection. Figure 60 shows how the time-versus-current curves are plotted in a diagram. The time setting is chosen to get the shortest fault time with maintained selectivity. Selectivity is assured if the time difference between the curves is larger than a critical time difference.

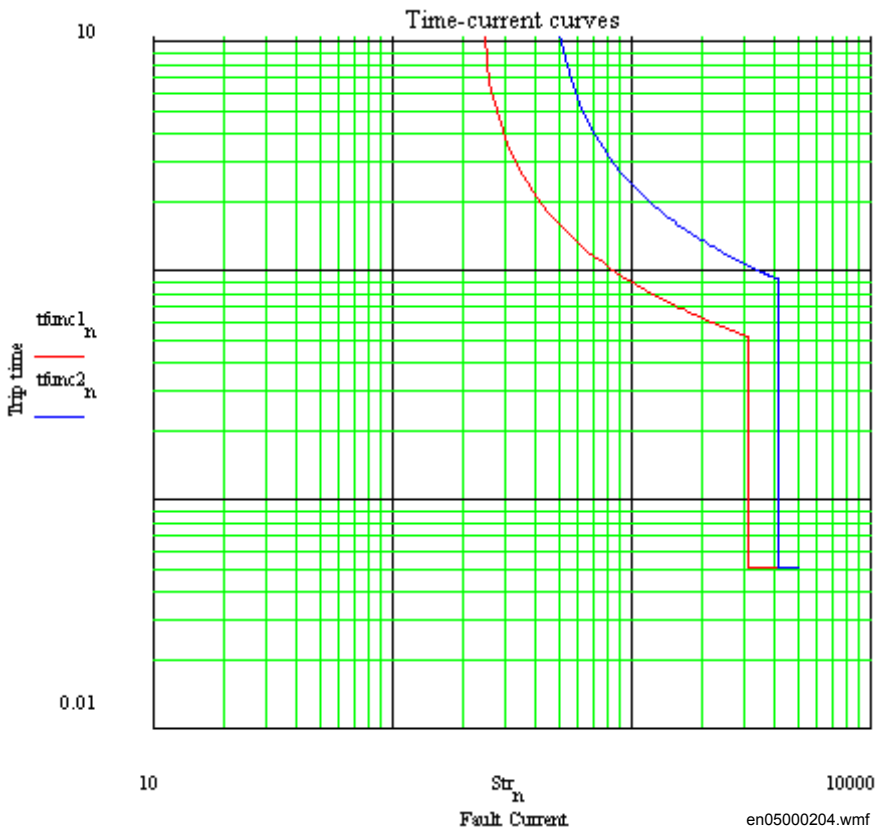

Figure 60: Fault time with maintained selectivity

To assure selectivity between different protections, in the radial network, there have to be a minimum time difference Δt between the time delays of two protections. The minimum time difference can be determined for different cases. To determine the shortest possible time difference, the operation time of protections, breaker opening time and protection resetting time must be known. These time delays can vary significantly between different protective equipment. The following time delays can be estimated:

Protection operation time:	15-60 ms
Protection resetting time:	15-60 ms
Breaker opening time:	20-120 ms

Example for time coordination

Assume two substations A and B directly connected to each other via one line, as shown in the figure 61. Consider a fault located at another line from the station B. The fault current to the overcurrent protection of IED B1 has a magnitude so that the protection will have instantaneous function. The overcurrent protection of IED A1 must have a delayed function. The sequence of events during the fault can be described using a time axis, see figure 61.

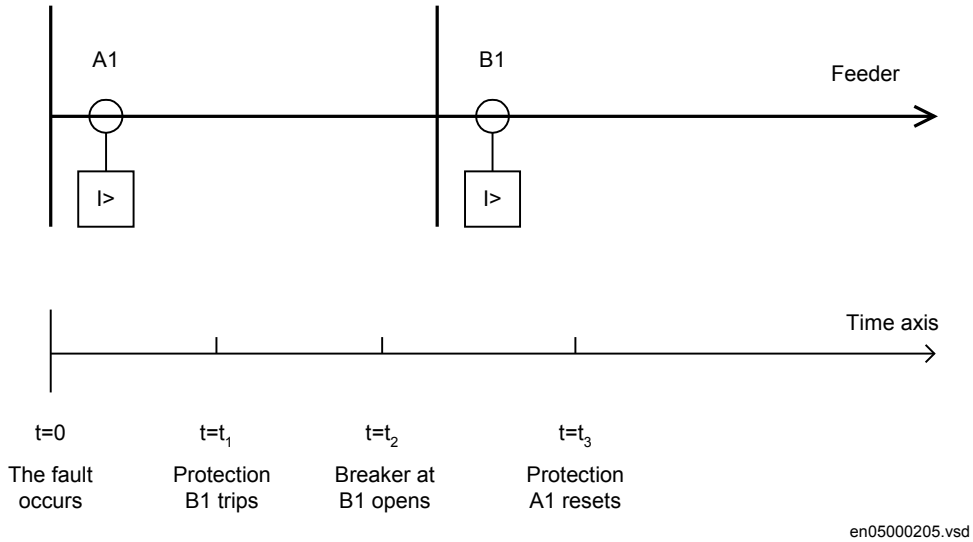

Figure 61: Sequence of events during fault

where:

t=0	is when the fault occurs,
$t=t_1$	is when the trip signal from the overcurrent protection at IED B1 is sent to the circuit breaker. The operation time of this protection is t_1,
$t=t_2$	is when the circuit breaker at IED B1 opens. The circuit breaker opening time is t_2 - t_1 and
$t=t_3$	is when the overcurrent protection at IED A1 resets. The protection resetting time is t_3 - t_2.

To ensure that the overcurrent protection at IED A1, is selective to the overcurrent protection at IED B1, the minimum time difference must be larger than the time t_3. There are uncertainties in the values of protection operation time, breaker opening time and protection resetting time. Therefore a safety margin has to be included. With normal values the needed time difference can be calculated according to equation 55.

$$\Delta t \geq 40\,ms + 100\,ms + 40\,ms + 40\,ms = 220\,ms$$

(Equation 55)

where it is considered that:

the operate time of overcurrent protection B1	is 40 ms
the breaker open time	is 100 ms
the resetting time of protection A1	is 40 ms and
the additional margin	is 40 ms

7.3 Instantaneous residual overcurrent protection EFPIOC

7.3.1 Identification

Function description	IEC 61850 identification	IEC 60617 identification	ANSI/IEEE C37.2 device number
Instantaneous residual overcurrent protection	EFPIOC	*IN*>>	50N

7.3.2 Application

In many applications, when fault current is limited to a defined value by the object impedance, an instantaneous earth-fault protection can provide fast and selective tripping.

The Instantaneous residual overcurrent EFPIOC, which can operate in 15 ms (50 Hz nominal system frequency) for faults characterized by very high currents, is included in the IED.

7.3.3 Setting guidelines

The parameters for the Instantaneous residual overcurrent protection EFPIOC are set via the local HMI or PCM600.

Some guidelines for the choice of setting parameter for EFPIOC is given.

GlobalBaseSel: Selects the global base value group used by the function to define (*IBase*), (*UBase*) and (*SBase*).

The setting of the function is limited to the operate residual current to the protection (*IN*>>).

The basic requirement is to assure selectivity, that is EFPIOC shall not be allowed to operate for faults at other objects than the protected object (line).

For a normal line in a meshed system single phase-to-earth faults and phase-to-phase-to-earth faults shall be calculated as shown in figure 62 and figure 63. The residual currents ($3I_0$) to the protection are calculated. For a fault at the remote line end this fault current is I_{fB}. In this calculation the operational state with high source impedance Z_A and low source impedance Z_B should be used. For the fault at the home busbar this fault current is I_{fA}. In this calculation the operational state with low source impedance Z_A and high source impedance Z_B should be used.

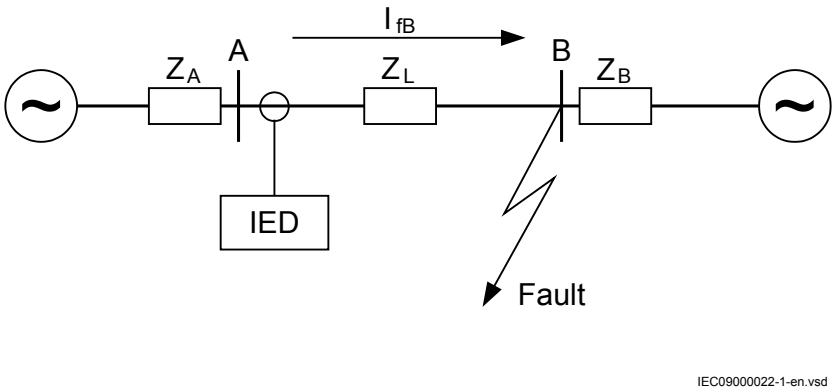

Figure 62: Through fault current from A to B: I_{fB}

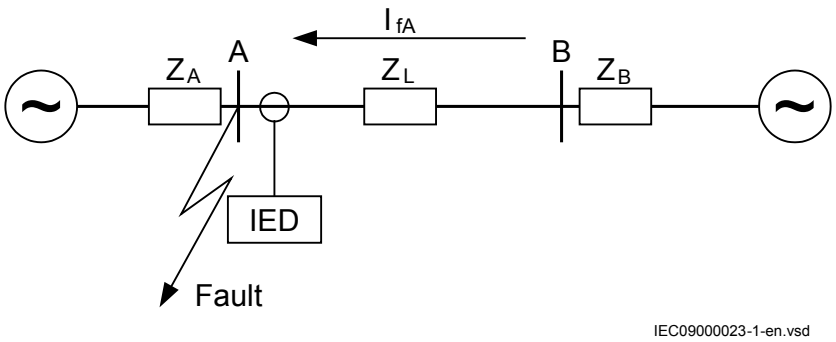

Figure 63: Through fault current from B to A: I_{fA}

The function shall not operate for any of the calculated currents to the protection. The minimum theoretical current setting (Imin) will be:

$$Imin \geq MAX(I_{fA}, I_{fA})$$

(Equation 56)

A safety margin of 5% for the maximum static inaccuracy and a safety margin of 5% for maximum possible transient overreach have to be introduced. An additional 20% is suggested due to inaccuracy of instrument transformers under transient conditions and inaccuracy in the system data.

The minimum primary current setting (Is) is:

$$Is \geq 1.3.Imin$$

(Equation 57)

In case of parallel lines with zero sequence mutual coupling a fault on the parallel line, as shown in figure 64, should be calculated.

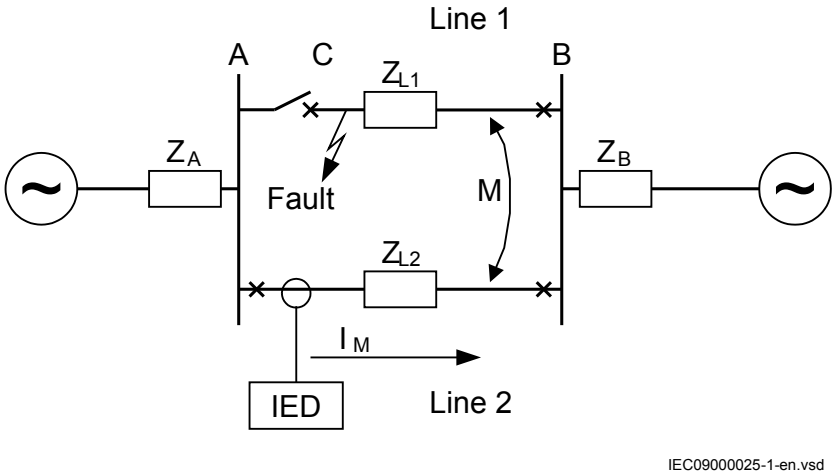

Figure 64: Two parallel lines. Influence from parallel line to the through fault current: I_M

The minimum theoretical current setting (Imin) will in this case be:

$$Imin \geq MAX(I_{fA}, I_{fB}, I_M)$$

(Equation 58)

Where:

I_{fA} and I_{fB} have been described for the single line case.

Considering the safety margins mentioned previously, the minimum setting (Is) is:

$$Is \geq 1.3 . Imin$$

(Equation 59)

Transformer inrush current shall be considered.

The setting of the protection is set as a percentage of the base current (*IBase*).

Operation: set the protection to *On* or *Off*.

IN>>: Set operate current in % of *IBase*. *IBase* is a global parameter valid for all functions in the IED.

7.4 Four step residual overcurrent protection, zero, negative sequence direction EF4PTOC

7.4.1 Identification

Function description	IEC 61850 identification	IEC 60617 identification	ANSI/IEEE C37.2 device number
Four step residual overcurrent protection, zero or negative sequence direction	EF4PTOC	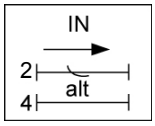	51N/67N

7.4.2 Application

The four step residual overcurrent protection, zero or negative sequence direction EF4PTOC is used in several applications in the power system. Some applications are:

- Earth-fault protection of feeders in effectively earthed distribution systems. Normally these feeders have radial structure.
- Back-up earth-fault protection of subtransmission and transmission lines.
- Sensitive earth-fault protection of transmission lines. EF4PTOC can have better sensitivity to detect resistive phase-to-earth-faults compared to distance protection.
- Back-up earth-fault protection of power transformers with earth source at substation.
- Earth-fault protection of different kinds of equipment connected to the power system such as shunt capacitor banks, shunt reactors and others.
- Negative sequence direcitonal earth-fault protection of feeders with PTs connected in Open Delta connection from which it is not possible to derive Zero sequence voltage.
- Negative sequence directional earth-fault protection of double-circuit medium or long transmission lines with significant mutual coupling.

In many applications several steps with different current operating levels and time delays are needed. EF4PTOC can have up to four, individual settable steps. The flexibility of each step of EF4PTOC is great. The following options are possible:

Non-directional/Directional function: In some applications the non-directional functionality is used. This is mostly the case when no fault current can be fed from the protected object itself. In order to achieve both selectivity and fast fault clearance, the directional function can be necessary. This can be the case for earth-fault protection in meshed and effectively earthed transmission systems. The directional residual overcurrent protection is also well suited to operate in teleprotection communication schemes, which enables fast clearance of earth faults on transmission lines. The directional function uses the polarizing quantity as decided by setting. Voltage polarizing ($3U_0$ or U_2) is most commonly used, but alternatively current polarizing ($3I_0$ or I_2) where currents in transformer neutrals providing the neutral (zero sequence) source (ZN) is used to polarize (IPol · ZN) the function. Dual polarizing where the sum of both voltage and current components is allowed to polarize can also be selected.

Choice of time characteristics: There are several types of time characteristics available such as definite time delay and different types of inverse time characteristics. The selectivity between different overcurrent protections is normally enabled by co-ordination between the operate time of the different protections. To enable optimal co-ordination all overcurrent protections, to be co-ordinated against each other, should have the same time characteristic. Therefore a wide range of standardized inverse time characteristics are available: IEC and ANSI. The time characteristic for step 1 and 4 can be chosen as definite time delay or inverse time characteristic. Step 2 and 3 are always definite time delayed and are used in system where IDMT is not needed.

Table 15: Time characteristics

Curve name
ANSI Extremely Inverse
ANSI Very Inverse
ANSI Normal Inverse
ANSI Moderately Inverse
ANSI/IEEE Definite time
ANSI Long Time Extremely Inverse
ANSI Long Time Very Inverse
ANSI Long Time Inverse
IEC Normal Inverse
IEC Very Inverse
IEC Inverse
IEC Extremely Inverse
IEC Short Time Inverse
IEC Long Time Inverse
IEC Definite Time
ASEA RI
RXIDG (logarithmic)

Power transformers can have a large inrush current, when being energized. This inrush current can have residual current components. The phenomenon is due to saturation of the transformer magnetic core during parts of the cycle. There is a risk that inrush current will give a residual current that reaches level above the operating current of the residual overcurrent protection. The inrush current has a large second harmonic content. This can be used to avoid unwanted operation of the protection. Therefore, EF4PTOC has a possibility of second harmonic restrain *2ndHarmStab* if the level of this harmonic current reaches a value above a set percentage of the fundamental current.

7.4.3 Setting guidelines

The parameters for the four step residual overcurrent protection, zero or negative sequence direction EF4PTOC are set via the local HMI or PCM600.

The following settings can be done for the four step residual overcurrent protection.

GlobalBaseSel: Selects the global base value group used by the function to define (*IBase*), (*UBase*) and (*SBase*).

Operation: Sets the protection to *On* or *Off*.

EnaDir: Enables the directional calculation in addition to the directional mode selection in each step.

7.4.3.1 Settings for steps 1 and 4

n means step 1 and 4. *x* means step 1, 2, 3 and 4.

DirModex: The directional mode of step *x*. Possible settings are *Off*/*Non-directional*/*Forward*/*Reverse*.

Characteristx: Selection of time characteristic for step *x*. Definite time delay and different types of inverse time characteristics are available.

Inverse time characteristic enables fast fault clearance of high current faults at the same time as selectivity to other inverse time phase overcurrent protections can be assured. This is mainly used in radial fed networks but can also be used in meshed networks. In meshed networks the settings must be based on network fault calculations.

To assure selectivity between different protections, in the radial network, there have to be a minimum time difference Δt between the time delays of two protections. The minimum time difference can be determined for different cases. To determine the shortest possible time difference, the operation time of protections, breaker opening time and protection resetting time must be known. These time delays can vary significantly between different protective equipment. The following time delays can be estimated:

Protection operate time:	15-60 ms
Protection resetting time:	15-60 ms
Breaker opening time:	20-120 ms

The different characteristics are described in the Technical Manual (TM).

INx>: Operate residual current level for step *x* given in % of *IBase*.

kn: Time multiplier for the dependent (inverse) characteristic for step *n*.

IMinn: Minimum operate current for step *n* in % of *IBase*. Set *IMinn* below *INx>* for every step to achieve ANSI reset characteristic according to standard. If *IMinn* is set above *INx* for any step the ANSI reset works as if current is zero when current drops below *IMinn*.

tnMin: Minimum operating time for inverse time characteristics. At high currents the inverse time characteristic might give a very short operation time. By setting this parameter the operation time of the step *n* can never be shorter than the setting.

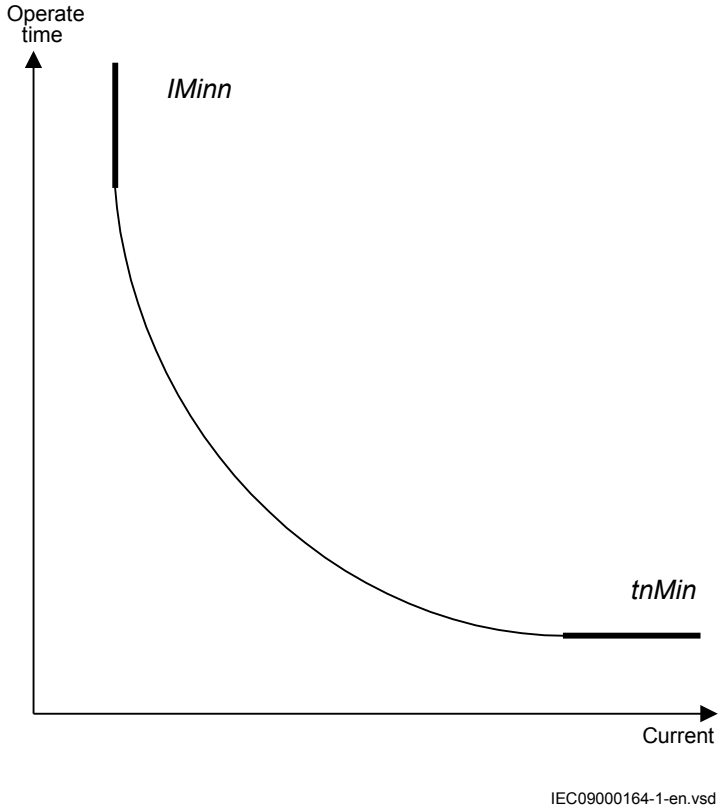

Figure 65: Minimum operate current and operate time for inverse time characteristics

In order to fully comply with curves definition the setting parameter *txMin* shall be set to the value which is equal to the operate time of the selected IEC inverse curve for measured current of twenty times the set current pickup value. Note that the operate time value is dependent on the selected setting value for time multiplier *kn*.

7.4.3.2 Common settings for all steps

tx: Definite time delay for step *x*. Used if definite time characteristic is chosen.

AngleRCA: Relay characteristic angle given in degree. This angle is defined as shown in figure 66. The angle is defined positive when the residual current lags the reference voltage (Upol = $3U_0$ or U_2)

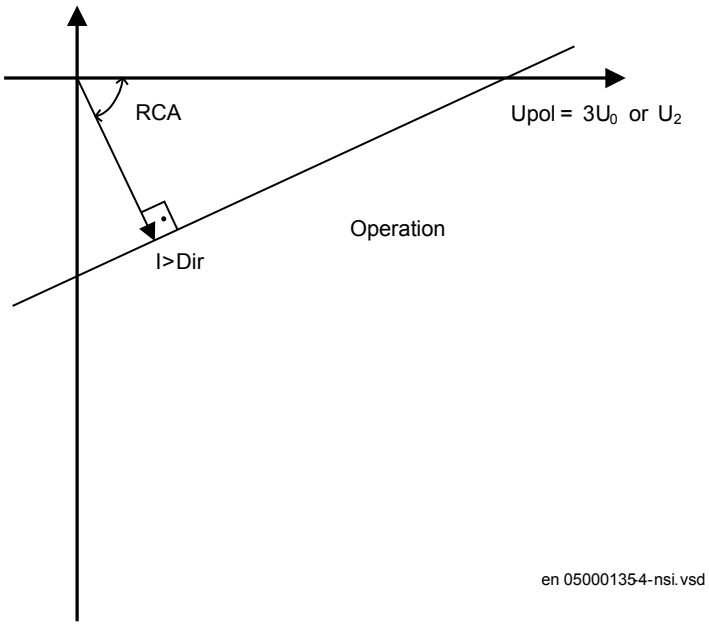

Figure 66: Relay characteristic angle given in degree

In a normal transmission network a normal value of RCA is about 65°. The setting range is -180° to +180°.

polMethod: Defines if the directional polarization is from

- *Voltage* ($3U_0$ or U_2)
- *Current* ($3I_0 \cdot$ ZNpol or $3I_2 \cdot$ZNpol where ZNpol is RNpol + jXNpol), or
- both currents and voltage, *Dual* (dual polarizing, ($3U_0 + 3I_0 \cdot$ ZNpol) or ($U_2 + I_2 \cdot$ ZNpol)).

Normally voltage polarizing from the internally calculated residual sum or an external open delta is used.

Current polarizing is useful when the local source is strong and a high sensitivity is required. In such cases the polarizing voltage ($3U_0$) can be below 1% and it is then necessary to use current polarizing or dual polarizing. Multiply the required set current (primary) with the minimum impedance (ZNpol) and check that the percentage of the phase-to-earth voltage is definitely higher than 1% (minimum $3U_0$>*UPolMin* setting) as a verification.

RNPol, XNPol: The zero-sequence source is set in primary ohms as base for the current polarizing. The polarizing voltage is then achieved as $3I_0 \cdot$ ZNpol. The

ZNpol can be defined as $(ZS_1-ZS_0)/3$, that is the earth return impedance of the source behind the protection. The maximum earth-fault current at the local source can be used to calculate the value of ZN as $U/(\sqrt{3} \cdot 3I_0)$ Typically, the minimum ZNPol ($3 \cdot$ zero sequence source) is set. Setting is in primary ohms.

When the dual polarizing method is used it is important that the product *INx*>· ZNpol is not greater than $3U_0$. If so, there is a risk for incorrect operation for faults in the reverse direction.

IPolMin: is the minimum earth-fault current accepted for directional evaluation. For smaller currents than this value the operation will be blocked. Typical setting is 5-10% of *IBase*.

UPolMin: Minimum polarization (reference) residual voltage for the directional function, given in % of *UBase*/√3.

I>Dir: Operate residual current release level in % of *IBase* for directional comparison scheme. The setting is given in % of *IBase* and must be set below the lowest *INx*> setting, set for the directional measurement. The output signals, STFW and STRV can be used in a teleprotection scheme. The appropriate signal should be configured to the communication scheme block.

7.4.3.3 2nd harmonic restrain

If a power transformer is energized there is a risk that the current transformer core will saturate during part of the period, resulting in a transformer inrush current. This will give a declining residual current in the network, as the inrush current is deviating between the phases. There is a risk that the residual overcurrent function will give an unwanted trip. The inrush current has a relatively large ratio of 2nd harmonic component. This component can be used to create a restrain signal to prevent this unwanted function.

At current transformer saturation a false residual current can be measured by the protection. Also here the 2nd harmonic restrain can prevent unwanted operation.

2ndHarmStab: The rate of 2nd harmonic current content for activation of the 2nd harmonic restrain signal. The setting is given in % of the fundamental frequency residual current.

HarmRestrainx: Enable block of step *x* from the harmonic restrain function.

7.4.3.4 Transformer application example

Two main cases are of interest when residual overcurrent protection is used for a power transformer, namely if residual current can be fed from the protected transformer winding or not.

The protected winding will feed earth-fault (residual) current to earth faults in the connected power system. The residual current fed from the transformer at external

phase-to-earth faults, is highly dependent of the total positive and zero-sequence source impedances as well as the residual current distribution between the network zero-sequence impedance and the transformer zero-sequence impedance. An example of this application is shown in figure 67.

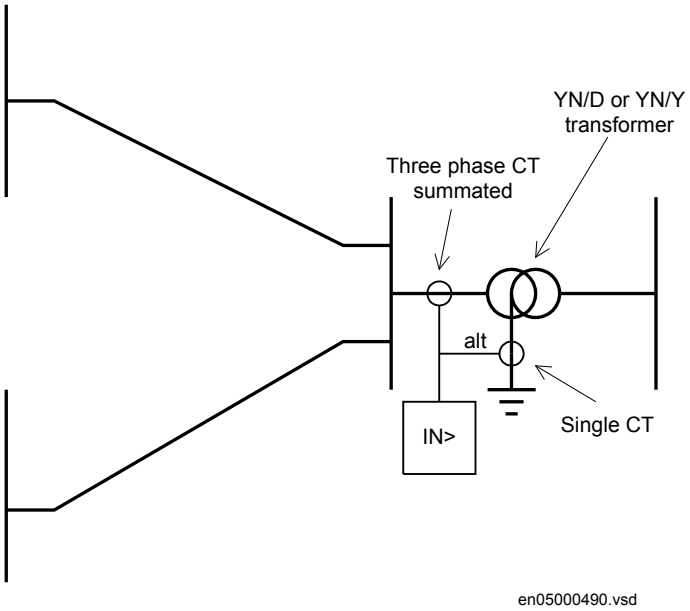

Figure 67: Residual overcurrent protection application on a directly earthed transformer winding

In this case the protection has two different tasks:

- Detection of earth faults on the transformer winding, to which the protection is connected.
- Detection of earth faults in the power system, to which the protected winding is connected.

It can be suitable to use a residual overcurrent protection with at least two steps. Step 1 shall have a short definite time delay and a relatively high current setting, in order to detect and clear high current earth faults in the transformer winding or in the power system close to the transformer. Step 2 shall have a longer time delay (definite or inverse time delay) and a lower current operation level. Step 2 shall detect and clear transformer winding earth faults with low earth-fault current, that is, faults close to the transformer winding neutral point. If the current setting gap between step 1 and step 2 is large another step can be introduced with a current and time delay setting between the two described steps.

The transformer inrush current will have a large residual current component. To prevent unwanted function of the earth-fault overcurrent protection, the 2nd harmonic restrain blocking should be used, at least for the sensitive step 2.

If the protected winding will not feed earth-fault (residual) current to earth faults in the connected power system the application is as shown in figure 68.

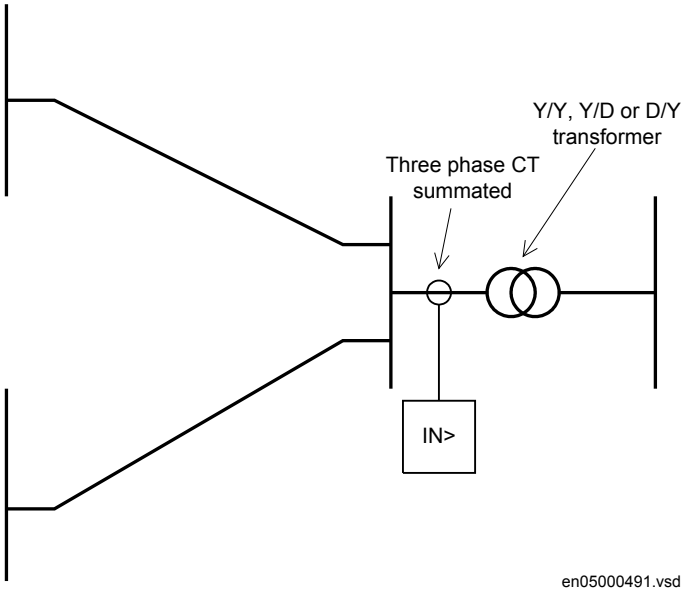

Figure 68: Residual overcurrent protection application on an isolated transformer winding

In the calculation of the fault current fed to the protection, at different earth faults, are highly dependent on the positive and zero sequence source impedances, as well as the division of residual current in the network. Earth-fault current calculations are necessary for the setting.

Setting of step 1

One requirement is that earth faults at the busbar, where the transformer winding is connected, shall be detected. Therefore a fault calculation as shown in figure 69 is made.

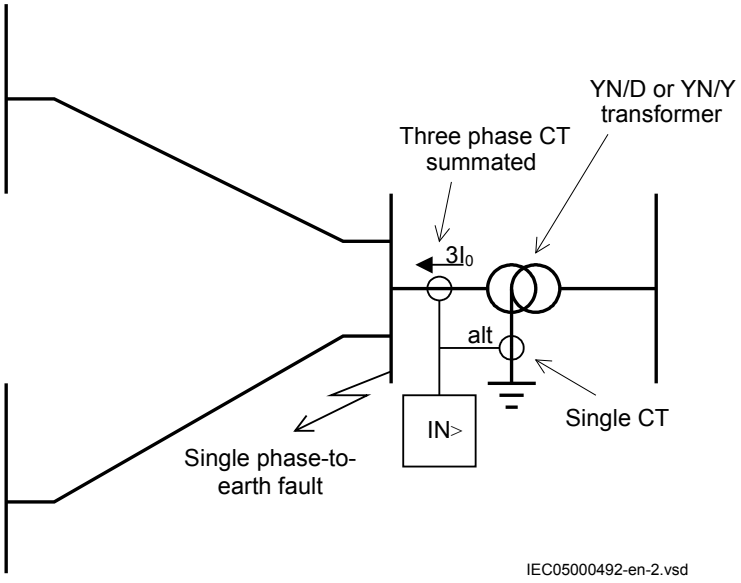

Figure 69: Step 1 fault calculation 1

This calculation gives the current fed to the protection: $3I_{0fault1}$.

To assure that step 1, selectivity to other earth-fault protections in the network a short delay is selected. Normally, a delay in the range 0.3 – 0.4 s is appropriate. To assure selectivity to line faults, tripped after a delay (typically distance protection zone 2) of about 0.5 s the current setting must be set so high so that such faults does not cause unwanted step 1 trip. Therefore, a fault calculation as shown in figure 70 is made.

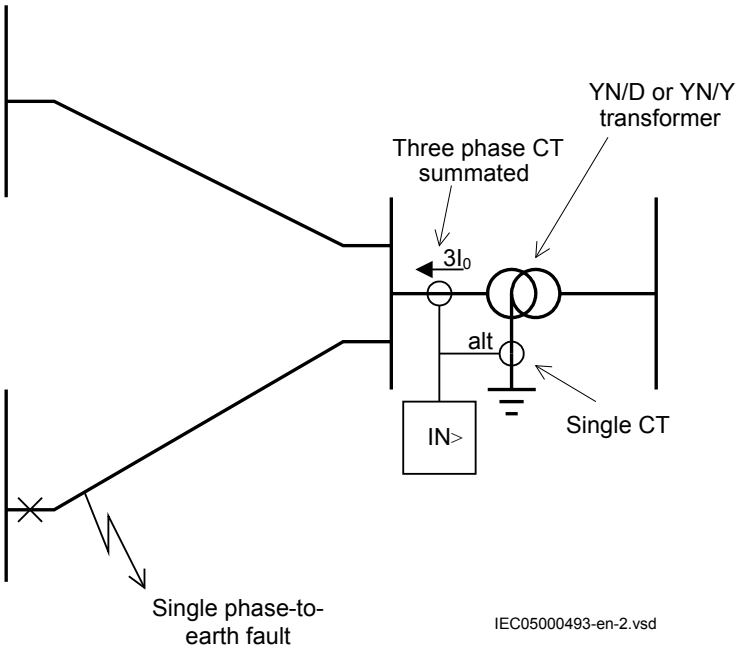

Figure 70: Step 1 fault calculation 1

The fault is located at the borderline between instantaneous and delayed operation of the line protection, such as Distance protection or line residual overcurrent protection. This calculation gives the current fed to the protection: $3I_{0fault2}$

The setting of step 1 can be chosen within the interval shown in equation 60.

$$3I_{0fault2} \cdot lowmar < I_{step1} < 3I_{0fault1} \cdot highmar$$

(Equation 60)

Where:

lowmar is a margin to assure selectivity (typical 1.2) and

highmar is a margin to assure fast fault clearance of busbar fault (typical 1.2).

Setting of step 2

The setting of the sensitive step 2 is dependent of the chosen time delay. Often a relatively long definite time delay or inverse time delay is chosen. The current setting can be chosen very low. As it is required to detect earth faults in the transformer winding, close to the neutral point, values down to the minimum setting possibilities can be chosen. However, one must consider zero-sequence currents that can occur during normal operation of the power system. Such currents can be due to un-transposed lines.

In case to protection of transformer windings not feeding residual current at external earth faults a fast lowcurrent step can be acceptable.

7.5 Thermal overload protection, two time constants TRPTTR

7.5.1 Identification

Function description	IEC 61850 identification	IEC 60617 identification	ANSI/IEEE C37.2 device number
Thermal overload protection, two time constants	TRPTTR		49

7.5.2 Application

Transformers in the power system are designed for a certain maximum load current (power) level. If the current exceeds this level the losses will be higher than

expected. As a consequence the temperature of the transformer will increase. If the temperature of the transformer reaches too high values the equipment might be damaged:

- The insulation within the transformer will experience forced ageing. As a consequence of this, the risk of internal phase-to-phase or phase-to-earth faults will increase.
- There might be hot spots within the transformer, which will degrade the paper insulation. It might also cause bubbling in the transformer oil.

In stressed situations in the power system it can be required to overload transformers for a limited time. This should be done without the above mentioned risks. The thermal overload protection provides information and makes temporary overloading of transformers possible.

The permissible load level of a power transformer is highly dependent on the cooling system of the transformer. There are two main principles:

- OA: The air is naturally circulated to the coolers without fans and the oil is naturally circulated without pumps.
- FOA: The coolers have fans to force air for cooling and pumps to force the circulation of the transformer oil.

The protection can have two sets of parameters, one for non-forced cooling and one for forced cooling. Both the permissive steady state loading level as well as the thermal time constant is influenced by the cooling system of the transformer. The two parameters sets can be activated by the binary input signal COOLING. This can be used for transformers where forced cooling can be taken out of operation, for example at fan or pump faults.

The thermal overload protection estimates the internal heat content of the transformer (temperature) continuously. This estimation is made by using a thermal model of the transformer, which is based on current measurement.

If the heat content of the protected transformer reaches a set alarm level a signal can be given to the operator. Two alarm levels are available. This enables preventive actions in the power system to be taken before dangerous temperatures are reached. If the temperature continues to increase to the trip value, the protection initiates a trip of the protected transformer.

After tripping by the thermal overload protection, the transformer will cool down over time. There will be a time gap before the heat content (temperature) reaches such a level so that the transformer can be taken into service again. Therefore, the function will continue to estimate the heat content using a set cooling time constant. Energizing of the transformer can be blocked until the heat content has reached a set level.

7.5.3 Setting guideline

The parameters for the thermal overload protection, two time constants (TRPTTR) are set via the local HMI or through the Protection and Control Manager (PCM600).

The following settings can be done for the thermal overload protection:

GlobalBaseSel: Selects the global base value group used by the function to define (*IBase*), (*UBase*) and (*SBase*).

Operation: Sets the mode of operation. *Off* switches off the complete function.

IRef: Reference level of the current given in % of *IBase*. When the current is equal to *IRef* the final (steady state) heat content is equal to 1. It is suggested to give a setting corresponding to the rated current of the transformer winding. Transformer rated current / *IBase** 100%.

IBase1: Base current for setting given as percentage of *IBase*. This setting shall be related to the status with no COOLING input. It is suggested to give a setting corresponding to the rated current of the transformer with natural cooling (OA).

IBase2: Base current for setting given as percentage of *IBase*. This setting shall be related to the status with activated COOLING input. It is suggested to give a setting corresponding to the rated current of the transformer with forced cooling (FOA). If the transformer has no forced cooling *IBase2* can be set equal to *IBase1*.

Tau1: The thermal time constant of the protected transformer, related to *IBase1* (no cooling) given in minutes.

Tau2: The thermal time constant of the protected transformer, related to *IBase2* (with cooling) given in minutes.

The thermal time constant should be obtained from the transformer manufacturers manuals. The thermal time constant is dependent on the cooling and the amount of oil. Normal time constants for medium and large transformers (according to IEC 60076-7) are about 2.5 hours for naturally cooled transformers and 1.5 hours for forced cooled transformers.

The time constant can be estimated from measurements of the oil temperature during a cooling sequence (described in IEC 60076-7). It is assumed that the transformer is operated at a certain load level with a constant oil temperature (steady state operation). The oil temperature above the ambient temperature is $\Delta\Theta_{o0}$. Then the transformer is disconnected from the grid (no load). After a time t of at least 30 minutes the temperature of the oil is measured again. Now the oil temperature above the ambient temperature is $\Delta\Theta_{ot}$. The thermal time constant can now be estimated as:

$$\tau = \frac{t}{\ln \Delta\Theta_{o0} - \ln \Delta\Theta_{ot}}$$

(Equation 61)

If the transformer has forced cooling (FOA) the measurement should be made both with and without the forced cooling in operation, giving *Tau2* and *Tau1*.

The time constants can be changed if the current is higher than a set value or lower than a set value. If the current is high it is assumed that the forced cooling is activated while it is deactivated at low current. The setting of the parameters below enables automatic adjustment of the time constant.

Tau1High: Multiplication factor to adjust the time constant *Tau1* if the current is higher than the set value *IHighTau1*. *IHighTau1* is set in % of *IBase1*.

Tau1Low: Multiplication factor to adjust the time constant *Tau1* if the current is lower than the set value *ILowTau1*. *ILowTau1* is set in % of *IBase1*.

Tau2High: Multiplication factor to adjust the time constant *Tau2* if the current is higher than the set value *IHighTau2*. *IHighTau2* is set in % of *IBase2*.

Tau2Low: Multiplication factor to adjust the time constant *Tau2* if the current is lower than the set value *ILowTau2*. *ILowTau2* is set in % of *IBase2*.

The possibility to change time constant with the current value as the base can be useful in different applications. Below some examples are given:

- In case a total interruption (low current) of the protected transformer all cooling possibilities will be inactive. This can result in a changed value of the time constant.
- If other components (motors) are included in the thermal protection, there is a risk of overheating of that equipment in case of very high current. The thermal time constant is often smaller for a motor than for the transformer.

ITrip: The steady state current that the transformer can withstand. The setting is given in % of *IBase1* or *IBase2*.

Alarm1: Heat content level for activation of the signal ALARM1. ALARM1 is set in % of the trip heat content level.

Alarm2: Heat content level for activation of the output signal ALARM2. ALARM2 is set in % of the trip heat content level.

ResLo: Lockout release level of heat content to release the lockout signal. When the thermal overload protection trips a lock-out signal is activated. This signal is intended to block switching on of the protected circuit transformer as long as the transformer temperature is high. The signal is released when the estimated heat content is below the set value. This temperature value should be chosen below the alarm temperature. *ResLo* is set in % of the trip heat content level.

Warning: If the calculated time to trip factor is below the setting *Warning* a warning signal is activated. The setting is given in minutes.

7.6 Breaker failure protection 3-phase activation and output CCRBRF

7.6.1 Identification

Function description	IEC 61850 identification	IEC 60617 identification	ANSI/IEEE C37.2 device number
Breaker failure protection, 3-phase activation and output	CCRBRF	*3I>BF*	50BF

7.6.2 Application

In the design of the fault clearance system the N-1 criterion is often used. This means that a fault needs to be cleared even if any component in the fault clearance system is faulty. One necessary component in the fault clearance system is the circuit breaker. It is from practical and economical reason not feasible to duplicate the circuit breaker for the protected component. Instead a breaker failure protection is used.

Breaker failure protection, 3-phase activation and output (CCRBRF) will issue a back-up trip command to adjacent circuit breakers in case of failure to trip of the “normal” circuit breaker for the protected component. The detection of failure to break the current through the breaker is made by means of current measurement or as detection of remaining trip signal (unconditional).

CCRBRF can also give a re-trip. This means that a second trip signal is sent to the protected circuit breaker. The re-trip function can be used to increase the probability of operation of the breaker, or it can be used to avoid back-up trip of many breakers in case of mistakes during relay maintenance and test.

7.6.3 Setting guidelines

The parameters for Breaker failure protection 3-phase activation and output CCRBRF are set via the local HMI or PCM600.

The following settings can be done for the breaker failure protection.

GlobalBaseSel: Selects the global base value group used by the function to define (*IBase*), (*UBase*) and (*SBase*).

Operation: *Off*/*On*

FunctionMode This parameter can be set *Current* or *Contact*. This states the way the detection of failure of the breaker is performed. In the mode current the current measurement is used for the detection. In the mode *Contact* the long duration of breaker position signal is used as indicator of failure of the breaker. The mode *Current&Contact* means that both ways of detections are activated. *Contact* mode can be usable in applications where the fault current through the circuit breaker is small. This can be the case for some generator protection application (for example reverse power protection) or in case of line ends with weak end infeed.

RetripMode: This setting states how the re-trip function shall operate. *Retrip Off* means that the re-trip function is not activated. *CB Pos Check* (circuit breaker position check) and *Current* means that a phase current must be larger than the operate level to allow re-trip. *CB Pos Check* (circuit breaker position check) and *Contact* means re-trip is done when circuit breaker is closed (breaker position is used). *No CBPos Check* means re-trip is done without check of breaker position.

Table 16: Dependencies between parameters RetripMode and FunctionMode

RetripMode	*FunctionMode*	Description
Retrip Off	N/A	the re-trip function is not activated
CB Pos Check	*Current*	a phase current must be larger than the operate level to allow re-trip
	Contact	re-trip is done when breaker position indicates that breaker is still closed after re-trip time has elapsed
	Current&Contact	both methods are used
No CBPos Check	*Current*	re-trip is done without check of breaker position
	Contact	re-trip is done without check of breaker position
	Current&Contact	both methods are used

BuTripMode: Back-up trip mode is given to state sufficient current criteria to detect failure to break. For *Current* operation *2 out of 4* means that at least two currents, of the three-phase currents and the residual current, shall be high to indicate breaker failure. *1 out of 3* means that at least one current of the three-phase currents shall be high to indicate breaker failure. *1 out of 4* means that at least one current of the three-phase currents or the residual current shall be high to indicate breaker failure. In most applications *1 out of 3* is sufficient. For *Contact* operation means back-up trip is done when circuit breaker is closed (breaker position is used).

IP>: Current level for detection of breaker failure, set in % of *IBase*. This parameter should be set so that faults with small fault current can be detected. The setting can be chosen in accordance with the most sensitive protection function to start the breaker failure protection. Typical setting is 10% of *IBase*.

I>BlkCont: If any contact based detection of breaker failure is used this function can be blocked if any phase current is larger than this setting level. If the *FunctionMode* is set *Current&Contact* breaker failure for high current faults are safely detected by the current measurement function. To increase security the contact based function should be disabled for high currents. The setting can be given within the range 5 – 200% of *IBase*.

IN>: Residual current level for detection of breaker failure set in % of *IBase*. In high impedance earthed systems the residual current at phase- to-earth faults are normally much smaller than the short circuit currents. In order to detect breaker failure at single-phase-earth faults in these systems it is necessary to measure the residual current separately. Also in effectively earthed systems the setting of the earth-fault current protection can be chosen to relatively low current level. The *BuTripMode* is set *1 out of 4*. The current setting should be chosen in accordance to the setting of the sensitive earth-fault protection. The setting can be given within the range 2 – 200 % of *IBase*.

t1: Time delay of the re-trip. The setting can be given within the range 0 – 60s in steps of 0.001 s. Typical setting is 0 – 50ms.

t2: Time delay of the back-up trip. The choice of this setting is made as short as possible at the same time as unwanted operation must be avoided. Typical setting is 90 – 200ms (also dependent of re-trip timer).

The minimum time delay for the re-trip can be estimated as:

$$t2 \geq t1 + t_{cbopen} + t_{BFP\_reset} + t_{margin}$$

(Equation 62)

where:

t_{cbopen}	is the maximum opening time for the circuit breaker
t_{BFP_reset}	is the maximum time for breaker failure protection to detect correct breaker function (the current criteria reset)
t_{margin}	is a safety margin

It is often required that the total fault clearance time shall be less than a given critical time. This time is often dependent of the ability to maintain transient stability in case of a fault close to a power plant.

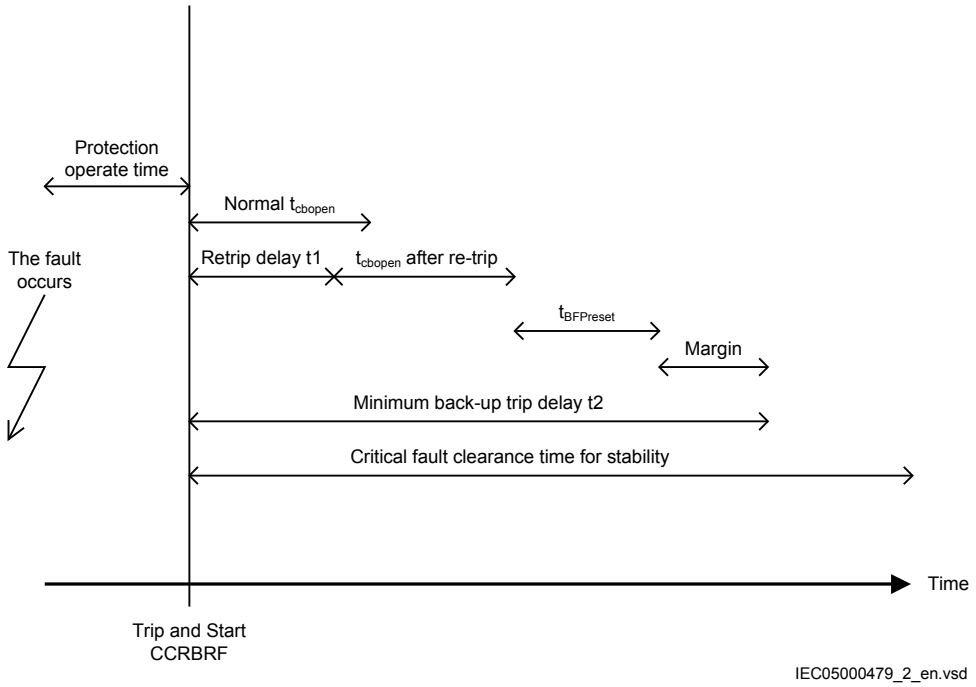

Figure 71: Time sequence

7.7 Pole discordance protection CCRPLD

7.7.1 Identification

Function description	IEC 61850 identification	IEC 60617 identification	ANSI/IEEE C37.2 device number
Pole discordance protection	CCRPLD	PD	52PD

7.7.2 Application

There is a risk that a circuit breaker will get discordance between the poles at circuit breaker operation: closing or opening. One pole can be open and the other two closed, or two poles can be open and one closed. Pole discordance of a circuit breaker will cause unsymmetrical currents in the power system. The consequence of this can be:

- Negative sequence currents that will give stress on rotating machines
- Zero sequence currents that might give unwanted operation of sensitive earth-fault protections in the power system.

It is therefore important to detect situations with pole discordance of circuit breakers. When this is detected the breaker should be tripped directly.

Pole discordance protection CCRPLD will detect situation with deviating positions of the poles of the protected circuit breaker. The protection has two different options to make this detection:

- By connecting the auxiliary contacts in the circuit breaker so that logic is created and a signal can be sent to the pole discordance protection, indicating pole discordance.
- Each phase current through the circuit breaker is measured. If the difference between the phase currents is larger than a *CurrUnsymLevel* this is an indication of pole discordance, and the protection will operate.

7.7.3 Setting guidelines

The parameters for the Pole discordance protection CCRPLD are set via the local HMI or PCM600.

The following settings can be done for the pole discordance protection.

GlobalBaseSel: Selects the global base value group used by the function to define (*IBase*), (*UBase*) and (*SBase*).

Operation: *Off* or *On*

tTrip: Time delay of the operation.

ContSel: Operation of the contact based pole discordance protection. Can be set: *Off*/*PD signal from CB*. If *PD signal from CB* is chosen the logic to detect pole discordance is made in the vicinity to the breaker auxiliary contacts and only one signal is connected to the pole discordance function.

CurrSel: Operation of the current based pole discordance protection. Can be set: *Off*/*CB oper monitor*/*Continuous monitor*. In the alternative *CB oper monitor* the function is activated only directly in connection to breaker open or close command (during 200 ms). In the alternative *Continuous monitor* function is continuously activated.

CurrUnsymLevel: Unsymmetrical magnitude of lowest phase current compared to the highest, set in % of the highest phase current.

CurrRelLevel: Current magnitude for release of the function in % of *IBase*.

7.8 Directional over-/under-power protection GOPPDOP/GUPPDUP

7.8.1 Application

The task of a generator in a power plant is to convert mechanical energy available as a torque on a rotating shaft to electric energy.

Sometimes, the mechanical power from a prime mover may decrease so much that it does not cover bearing losses and ventilation losses. Then, the synchronous generator becomes a synchronous motor and starts to take electric power from the rest of the power system. This operating state, where individual synchronous machines operate as motors, implies no risk for the machine itself. If the generator under consideration is very large and if it consumes lots of electric power, it may be desirable to disconnect it to ease the task for the rest of the power system.

Often, the motoring condition may imply that the turbine is in a very dangerous state. The task of the reverse power protection is to protect the turbine and not to protect the generator itself.

Steam turbines easily become overheated if the steam flow becomes too low or if the steam ceases to flow through the turbine. Therefore, turbo-generators should have reverse power protection. There are several contingencies that may cause reverse power: break of a main steam pipe, damage to one or more blades in the steam turbine or inadvertent closing of the main stop valves. In the last case, it is highly desirable to have a reliable reverse power protection. It may prevent damage to an otherwise undamaged plant.

During the routine shutdown of many thermal power units, the reverse power protection gives the tripping impulse to the generator breaker (the unit breaker). By doing so, one prevents the disconnection of the unit before the mechanical power has become zero. Earlier disconnection would cause an acceleration of the turbine generator at all routine shutdowns. This should have caused overspeed and high centrifugal stresses.

When the steam ceases to flow through a turbine, the cooling of the turbine blades will disappear. Now, it is not possible to remove all heat generated by the windage losses. Instead, the heat will increase the temperature in the steam turbine and especially of the blades. When a steam turbine rotates without steam supply, the electric power consumption will be about 2% of rated power. Even if the turbine rotates in vacuum, it will soon become overheated and damaged. The turbine overheats within minutes if the turbine loses the vacuum.

The critical time to overheating a steam turbine varies from about 0.5 to 30 minutes depending on the type of turbine. A high-pressure turbine with small and thin blades will become overheated more easily than a low-pressure turbine with long

and heavy blades. The conditions vary from turbine to turbine and it is necessary to ask the turbine manufacturer in each case.

Power to the power plant auxiliaries may come from a station service transformer connected to the secondary side of the step-up transformer. Power may also come from a start-up service transformer connected to the external network. One has to design the reverse power protection so that it can detect reverse power independent of the flow of power to the power plant auxiliaries.

Hydro turbines tolerate reverse power much better than steam turbines do. Only Kaplan turbine and bulb turbines may suffer from reverse power. There is a risk that the turbine runner moves axially and touches stationary parts. They are not always strong enough to withstand the associated stresses.

Ice and snow may block the intake when the outdoor temperature falls far below zero. Branches and leaves may also block the trash gates. A complete blockage of the intake may cause cavitations. The risk for damages to hydro turbines can justify reverse power protection in unattended plants.

A hydro turbine that rotates in water with closed wicket gates will draw electric power from the rest of the power system. This power will be about 10% of the rated power. If there is only air in the hydro turbine, the power demand will fall to about 3%.

Diesel engines should have reverse power protection. The generator will take about 15% of its rated power or more from the system. A stiff engine may require perhaps 25% of the rated power to motor it. An engine that is good run in might need no more than 5%. It is necessary to obtain information from the engine manufacturer and to measure the reverse power during commissioning.

Gas turbines usually do not require reverse power protection.

Figure 72 illustrates the reverse power protection with underpower protection and with overpower protection. The underpower protection gives a higher margin and should provide better dependability. On the other hand, the risk for unwanted operation immediately after synchronization may be higher. One should set the underpower protection (reference angle set to 0) to trip if the active power from the generator is less than about 2%. One should set the overpower protection (reference angle set to 180) to trip if the power flow from the network to the generator is higher than 1%.

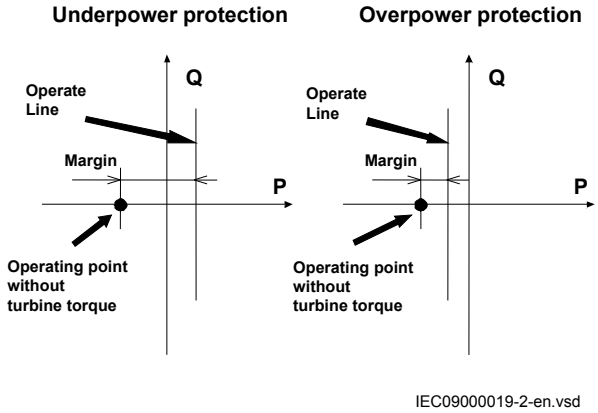

Figure 72: Reverse power protection with underpower or overpower protection

7.8.2 Directional overpower protection GOPPDOP

7.8.2.1 Identification

Function description	IEC 61850 identification	IEC 60617 identification	ANSI/IEEE C37.2 device number
Directional overpower protection	GOPPDOP	P > →	32

7.8.2.2 Setting guidelines

GlobalBaseSel: Selects the global base value group used by the function to define (*IBase*), (*UBase*) and (*SBase*).

Operation: With the parameter *Operation* the function can be set *On*/*Off*.

Mode: The voltage and current used for the power measurement. The setting possibilities are shown in table 17.

For reverse power applications *PosSeq* or *Arone* modes are strongly recommended.

Table 17: Complex power calculation

Set value *Mode*	Formula used for complex power calculation
L1, L2, L3	$\bar{S} = \bar{U}_{L1} \cdot \bar{I}_{L1}^{*} + \bar{U}_{L2} \cdot \bar{I}_{L2}^{*} + \bar{U}_{L3} \cdot \bar{I}_{L3}^{*}$ (Equation 63)
Arone	$\bar{S} = \bar{U}_{L1L2} \cdot \bar{I}_{L1}^{*} - \bar{U}_{L2L3} \cdot \bar{I}_{L3}^{*}$ (Equation 64)
PosSeq	$\bar{S} = 3 \cdot \bar{U}_{PosSeq} \cdot \bar{I}_{PosSeq}^{*}$ (Equation 65)
L1L2	$\bar{S} = \bar{U}_{L1L2} \cdot (\bar{I}_{L1}^{*} - \bar{I}_{L2}^{*})$ (Equation 66)
L2L3	$\bar{S} = \bar{U}_{L2L3} \cdot (\bar{I}_{L2}^{*} - \bar{I}_{L3}^{*})$ (Equation 67)
L3L1	$\bar{S} = \bar{U}_{L3L1} \cdot (\bar{I}_{L3}^{*} - \bar{I}_{L1}^{*})$ (Equation 68)
L1	$\bar{S} = 3 \cdot \bar{U}_{L1} \cdot \bar{I}_{L1}^{*}$ (Equation 69)
L2	$\bar{S} = 3 \cdot \bar{U}_{L2} \cdot \bar{I}_{L2}^{*}$ (Equation 70)
L3	$\bar{S} = 3 \cdot \bar{U}_{L3} \cdot \bar{I}_{L3}^{*}$ (Equation 71)

The function has two stages that can be set independently.

With the parameter *OpMode1(2)* the function can be set *On*/*Off*.

The function gives trip if the power component in the direction defined by the setting *Angle1(2)* is larger than the set pick up power value *Power1(2)*

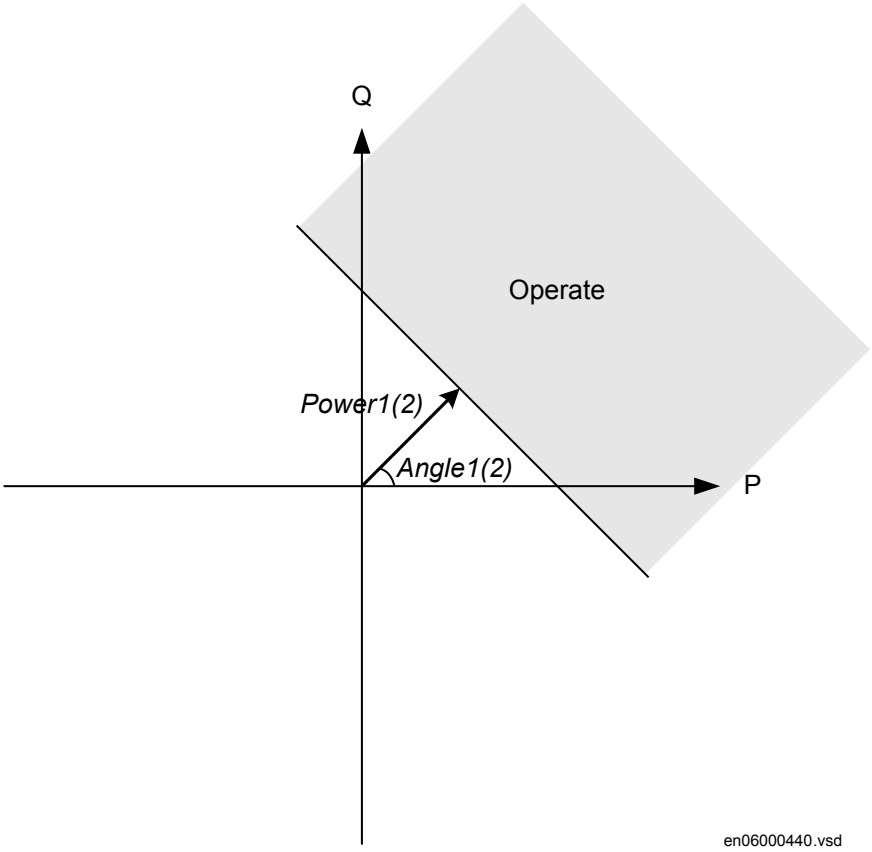

Figure 73: Overpower mode

The setting *Power1(2)* gives the power component pick up value in the *Angle1(2)* direction. The setting is given in p.u. of the generator rated power, see equation 72.

Minimum recommended setting is 1.0% of S_N. Note also that at the same time the minimum IED pickup current shall be at least 9 mA secondary.

$$S_N = \sqrt{3} \cdot UBase \cdot IBase$$

(Equation 72)

The setting *Angle1(2)* gives the characteristic angle giving maximum sensitivity of the power protection function. The setting is given in degrees. For active power the set angle should be 0° or 180°. 180° should be used for generator reverse power protection in 50Hz network while -179.5° should be used for generator reverse power protection in 60Hz network. This angle adjustment in 60Hz networks will improve accuracy of the power function.

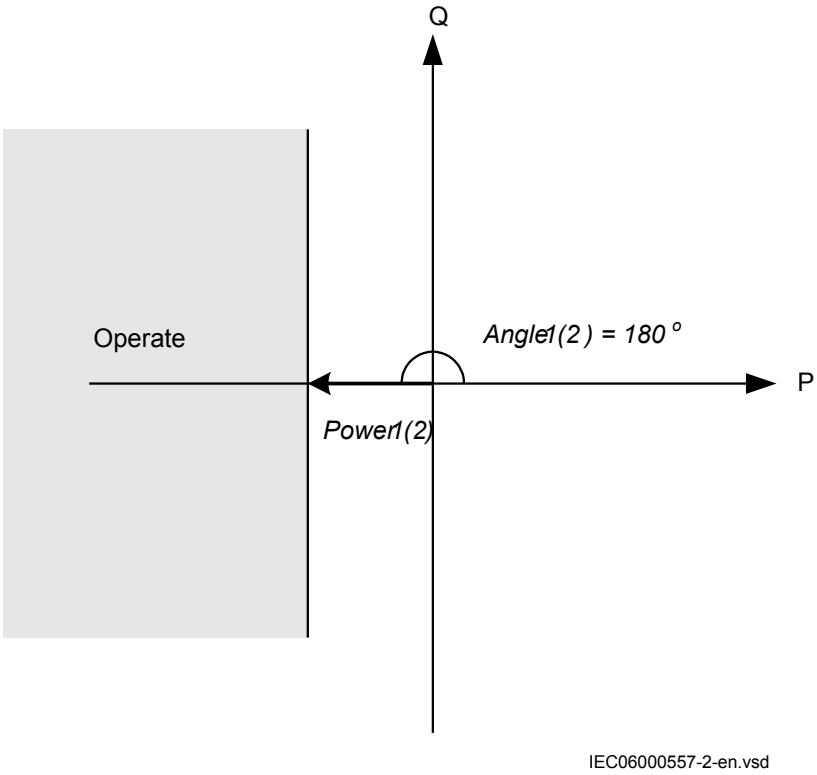

Figure 74: For reverse power the set angle should be 180° in the overpower function

TripDelay1(2) is set in seconds to give the time delay for trip of the stage after pick up.

The possibility to have low pass filtering of the measured power can be made as shown in the formula:

$$S = k \cdot S_{Old} + (1 - k) \cdot S_{Calculated}$$

(Equation 73)

Where	
S	is a new measured value to be used for the protection function
S_{old}	is the measured value given from the function in previous execution cycle
$S_{Calculated}$	is the new calculated value in the present execution cycle
k	is settable parameter

The value of *k=0.98* or even *k=0.99* is recommended in generator reverse power applications as the trip delay is normally quite long. This filtering will improve accuracy of the power function.

7.8.3 Directional underpower protection GUPPDUP

7.8.3.1 Identification

Function description	IEC 61850 identification	IEC 60617 identification	ANSI/IEEE C37.2 device number
Directional underpower protection	GUPPDUP	P < →	37

7.8.3.2 Setting guidelines

GlobalBaseSel: Selects the global base value group used by the function to define (*IBase*), (*UBase*) and (*SBase*).

Operation: With the parameter *Operation* the function can be set *On*/*Off*.

Mode: The voltage and current used for the power measurement. The setting possibilities are shown in table 18.

For reverse power applications *PosSeq* or *Arone* modes are strongly recommended.

Table 18: Complex power calculation

Set value *Mode*	Formula used for complex power calculation
L1, L2, L3	$\bar{S} = \bar{U}_{L1} \cdot \bar{I}_{L1}^{*} + \bar{U}_{L2} \cdot \bar{I}_{L2}^{*} + \bar{U}_{L3} \cdot \bar{I}_{L3}^{*}$ (Equation 74)
Arone	$\bar{S} = \bar{U}_{L1L2} \cdot \bar{I}_{L1}^{*} - \bar{U}_{L2L3} \cdot \bar{I}_{L3}^{*}$ (Equation 75)
PosSeq	$\bar{S} = 3 \cdot \bar{U}_{PosSeq} \cdot \bar{I}_{PosSeq}^{*}$ (Equation 76)
L1L2	$\bar{S} = \bar{U}_{L1L2} \cdot (\bar{I}_{L1}^{*} - \bar{I}_{L2}^{*})$ (Equation 77)
L2L3	$\bar{S} = \bar{U}_{L2L3} \cdot (\bar{I}_{L2}^{*} - \bar{I}_{L3}^{*})$ (Equation 78)
L3L1	$\bar{S} = \bar{U}_{L3L1} \cdot (\bar{I}_{L3}^{*} - \bar{I}_{L1}^{*})$ (Equation 79)
Table continues on next page	

Set value *Mode*	Formula used for complex power calculation
L1	$\bar{S} = 3 \cdot \bar{U}_{L1} \cdot \bar{I}_{L1}^{*}$ (Equation 80)
L2	$\bar{S} = 3 \cdot \bar{U}_{L2} \cdot \bar{I}_{L2}^{*}$ (Equation 81)
L3	$\bar{S} = 3 \cdot \bar{U}_{L3} \cdot \bar{I}_{L3}^{*}$ (Equation 82)

The function has two stages that can be set independently.

With the parameter *OpMode1(2)* the function can be set *On*/*Off*.

The function gives trip if the power component in the direction defined by the setting *Angle1(2)* is smaller than the set pick up power value *Power1(2)*

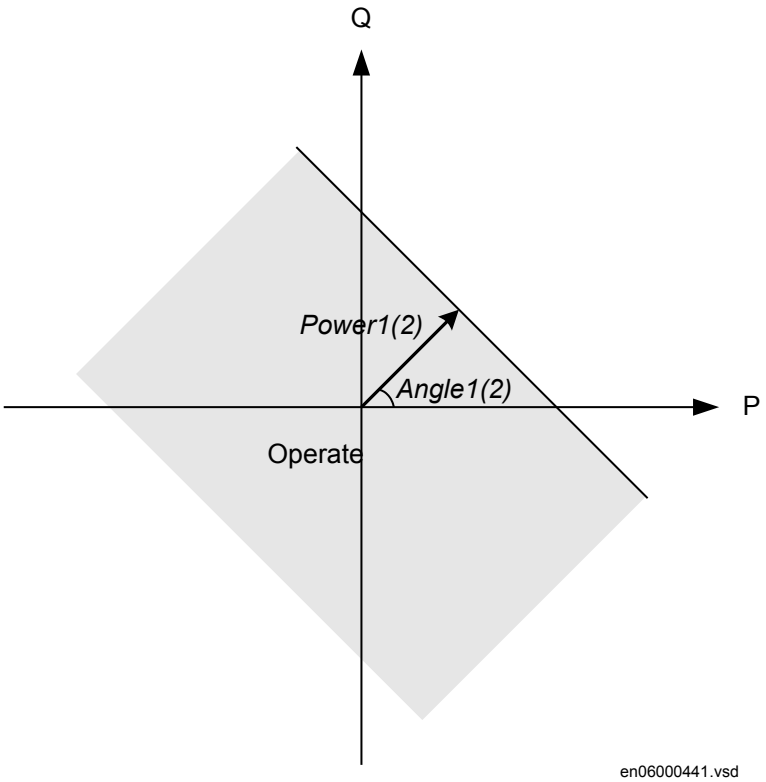

Figure 75: Underpower mode

The setting *Power1(2)* gives the power component pick up value in the *Angle1(2)* direction. The setting is given in p.u. of the generator rated power, see equation 83.

Minimum recommended setting is 1.0% of S_N. At the same time the minimum IED pickup current shall be at least 9 mA secondary.

$$S_N = \sqrt{3} \cdot UBase \cdot IBase$$

(Equation 83)

The setting *Angle1(2)* gives the characteristic angle giving maximum sensitivity of the power protection function. The setting is given in degrees. For active power the set angle should be 0° or 180°. 0° should be used for generator low forward active power protection.

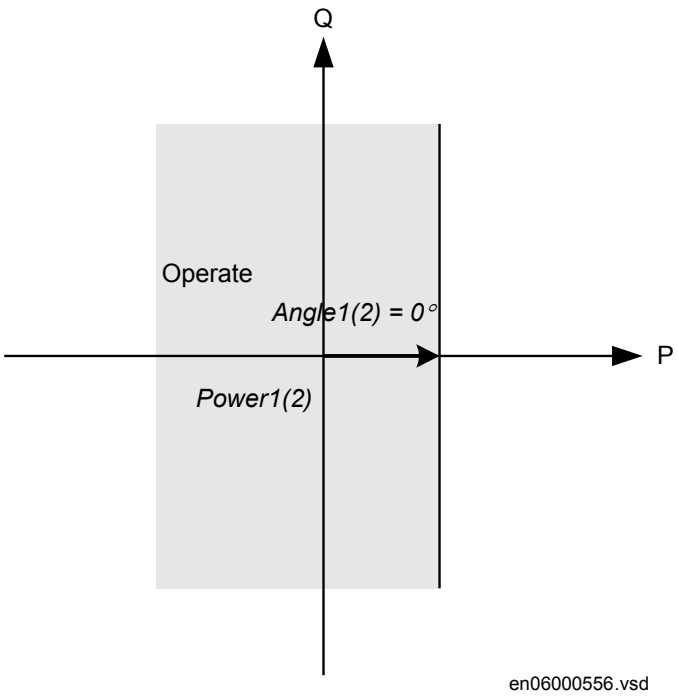

Figure 76: For low forward power the set angle should be 0° in the underpower function

TripDelay1(2) is set in seconds to give the time delay for trip of the stage after pick up.

The possibility to have low pass filtering of the measured power can be made as shown in the formula:

$$S = k \cdot S_{Old} + (1 - k) \cdot S_{Calculated}$$

(Equation 84)

Where

S	is a new measured value to be used for the protection function
S_{old}	is the measured value given from the function in previous execution cycle
$S_{Calculated}$	is the new calculated value in the present execution cycle
k	is settable parameter

The value of *k=0.98* or even *k=0.99* is recommended in generator low forward power applications as the trip delay is normally quite long. This filtering will improve accuracy of the power function.

7.9 Negative sequence based overcurrent function DNSPTOC

7.9.1 Identification

Function description	IEC 61850 identification	IEC 60617 identification	ANSI/IEEE C37.2 device number
Negative sequence based overcurrent function	DNSPTOC	*3I2>*	46

7.9.2 Application

Negative sequence based overcurrent function (DNSPTOC) is typically used as sensitive earth-fault protection of power lines, where incorrect zero sequence polarization may result from mutual induction between two or more parallel lines.

Additionally, it is applied in applications on cables, where zero sequence impedance depends on the fault current return paths, but the cable negative sequence impedance is practically constant.

The directional function is current and voltage polarized. The function can be set to forward, reverse or non-directional independently for each step.

DNSPTOC protects against all unbalanced faults including phase-to-phase faults. The minimum start current of the function must be set to above the normal system unbalance level in order to avoid unwanted operation.

7.9.3 Setting guidelines

Below is an example of Negative sequence based overcurrent function (DNSPTOC) used as a sensitive earth-fault protection for power lines. The following settings must be done in order to ensure proper operation of the protection:

GlobalBaseSel: Selects the global base value group used by the function to define (*IBase*), (*UBase*) and (*SBase*).

- setting *RCADir* to value *+65 degrees*, that is, the negative sequence current typically lags the inverted negative sequence voltage for this angle during the fault
- setting *ROADir* to value *90 degrees*
- setting *LowVolt_VM* to value *2%*, that is, the negative sequence voltage level above which the directional element will be enabled
- setting *Operation_OC1* to *On*
- setting *StartCurr_OC1* to value between *3-10%*, (typical values)
- setting *tDef_OC1* to insure proper time coordination with other earth-fault protections installed in the vicinity of this power line
- setting *DirMode_OC1* to *Forward*
- setting *DirPrinc_OC1* to *IcosPhi&U*
- setting *ActLowVolt1_VM* to *Block*

DNSPTOC is used in directional comparison protection scheme for the power line protection, when communication channels to the remote end of this power line are available. In that case, two negative sequence overcurrent steps are required - one in forward and another in reverse direction. The OC1 stage is used to detect faults in forward direction and the OC2 stage is used to detect faults in reverse direction.

However, the following must be noted for such application:

- setting *RCADir* and *ROADir* are applicable for both steps OC1 and OC2
- setting *DirMode_OC1* must be set to *Forward*
- setting *DirMode_OC2* must be set to *Reverse*
- setting *StartCurr_OC2* must be made more sensitive than *pickup* value of the forward OC1 element, that is, typically 60% of *StartCurr_OC1* set pickup level in order to insure proper operation of the directional comparison scheme during current reversal situations
- the start signals STOC1 and STOC2 from OC1 and OC2 elements is used to send forward and reverse signals to the remote end of the power line
- the available scheme communications function block within IED is used between the protection function and the teleprotection communication equipment, in order to insure proper conditioning of the above two start signals.

ActLowVolt1 and *ActLowVolt2* should not be set to *Memory*.

Section 8 Voltage protection

8.1 Two step undervoltage protection UV2PTUV

8.1.1 Identification

Function description	IEC 61850 identification	IEC 60617 identification	ANSI/IEEE C37.2 device number
Two step undervoltage protection	UV2PTUV	*2U<*	27

8.1.2 Application

Two-step undervoltage protection function (UV2PTUV) is applicable in all situations, where reliable detection of low phase voltages is necessary. It is used also as a supervision and fault detection function for other protection functions, to increase the security of a complete protection system.

UV2PTUV is applied to power system elements, such as generators, transformers, motors and power lines in order to detect low voltage conditions. Low voltage conditions are caused by abnormal operation or fault in the power system. UV2PTUV is used in combination with overcurrent protections, either as restraint or in logic "and gates" of the trip signals issued by the two functions. Other applications are the detection of "no voltage" condition, for example, before the energization of a HV line or for automatic breaker trip in case of a blackout. UV2PTUV is also used to initiate voltage correction measures, like insertion of shunt capacitor banks to compensate for reactive load and thereby increasing the voltage. The function has a high measuring accuracy to allow applications to control reactive load.

UV2PTUV is used to disconnect apparatuses, like electric motors, which will be damaged when subject to service under low voltage conditions. UV2PTUV deals with low voltage conditions at power system frequency, which can be caused by the following reasons:

1. Malfunctioning of a voltage regulator or wrong settings under manual control (symmetrical voltage decrease).
2. Overload (symmetrical voltage decrease).
3. Short circuits, often as phase-to-earth faults (unsymmetrical voltage decrease).

UV2PTUV prevents sensitive equipment from running under conditions that could cause their overheating and thus shorten their life time expectancy. In many cases, it is a useful function in circuits for local or remote automation processes in the power system.

8.1.3 Setting guidelines

All the voltage conditions in the system where UV2PTUV performs its functions should be considered. The same also applies to the associated equipment, its voltage and time characteristic.

There is a very wide application area where general undervoltage functions are used. All voltage related settings are made as a percentage of the global settings base voltage *UBase*, which normally is set to the primary rated voltage level (phase-to-phase) of the power system or the high voltage equipment under consideration.

The setting for UV2PTUV is normally not critical, since there must be enough time available for the main protection to clear short circuits and earth faults.

Some applications and related setting guidelines for the voltage level are described in the following sections.

8.1.3.1 Equipment protection, such as for motors and generators

The setting must be below the lowest occurring "normal" voltage and above the lowest acceptable voltage for the equipment.

8.1.3.2 Disconnected equipment detection

The setting must be below the lowest occurring "normal" voltage and above the highest occurring voltage, caused by inductive or capacitive coupling, when the equipment is disconnected.

8.1.3.3 Power supply quality

The setting must be below the lowest occurring "normal" voltage and above the lowest acceptable voltage, due to regulation, good practice or other agreements.

8.1.3.4 Voltage instability mitigation

This setting is very much dependent on the power system characteristics, and thorough studies have to be made to find the suitable levels.

8.1.3.5 Backup protection for power system faults

The setting must be below the lowest occurring "normal" voltage and above the highest occurring voltage during the fault conditions under consideration.

8.1.3.6 Settings for Two step undervoltage protection

The following settings can be done for two step undervoltage protection (UV2PTUV).

GlobalBaseSel: Selects the global base value group used by the function to define (*IBase*), (*UBase*) and (*SBase*).

ConnType: Sets whether the measurement shall be phase-to-earth fundamental value, phase-to-phase fundamental value, phase-to-earth RMS value or phase-to-phase RMS value.

Operation: *Off/On*.

UV2PTUV measures selectively phase-to-earth voltages, or phase-to-phase voltage chosen by the setting *ConnType*.

This means operation for phase-to-earth voltage if:

$$U < (\%) \cdot UBase(kV) \Big/ \sqrt{3}$$

(Equation 85)

and operation for phase-to-phase voltage if:

$$U < (\%) \cdot UBase(kV)$$

(Equation 86)

Characteristic1: This parameter gives the type of time delay to be used for step 1. The setting can be. *Definite time/Inverse Curve A/Inverse Curve B*. The choice is highly dependent of the protection application.

OpModen: This parameter describes how many of the three measured voltages that should be below the set level to give operation for step *n* (*n*=step 1 and 2). The setting can be *1 out of 3*, *2 out of 3* or *3 out of 3*. It is sufficient that one phase voltage is low to give operation. If the function shall be insensitive for single phase-to-earth faults *2 out of 3* can be chosen.

Un<: Set undervoltage operation value for step *n* (*n*=step 1 and 2), given as % of the global parameter *UBase*. This setting is highly dependent of the protection application. Here it is essential to consider the minimum voltage at non-faulted situations. This voltage is larger than 90% of nominal voltage.

tn: Time delay for step *n* (*n*=step 1 and 2), given in s. This setting is highly dependent of the protection application. In many applications the protection function does not directly trip where there is short circuit or earth faults in the system. The time delay must be coordinated to the short circuit protection.

t1Min: Minimum operating time for inverse time characteristic for step 1, given in s. When using inverse time characteristic for the undervoltage function during very low voltages can give a short operation time. This might lead to unselective trip.

By setting *t1Min* longer than the operation time for other protections such unselective tripping can be avoided.

k1: Time multiplier for inverse time characteristic. This parameter is used for coordination between different inverse time delayed undervoltage protections.

The function must be externally blocked when the protected object is disconnected.

8.2 Two step overvoltage protection OV2PTOV

8.2.1 Identification

Function description	IEC 61850 identification	IEC 60617 identification	ANSI/IEEE C37.2 device number
Two step overvoltage protection	OV2PTOV	2U>	59

8.2.2 Application

Two step overvoltage protection OV2PTOV is applicable in all situations, where reliable detection of high voltage is necessary. OV2PTOV is used for supervision and detection of abnormal conditions, which, in combination with other protection functions, increase the security of a complete protection system.

High overvoltage conditions are caused by abnormal situations in the power system. OV2PTOV is applied to power system elements, such as generators, transformers, motors and power lines in order to detect high voltage conditions. OV2PTOV is used in combination with low current signals, to identify a transmission line, open in the remote end. In addition to that, OV2PTOV is also used to initiate voltage correction measures, like insertion of shunt reactors, to compensate for low load, and thereby decreasing the voltage. The function has a high measuring accuracy and hysteresis setting to allow applications to control reactive load.

OV2PTOV is used to disconnect apparatuses, like electric motors, which will be damaged when subject to service under high voltage conditions. It deals with high voltage conditions at power system frequency, which can be caused by:

1. Different kinds of faults, where a too high voltage appears in a certain power system, like metallic connection to a higher voltage level (broken conductor

falling down to a crossing overhead line, transformer flash over fault from the high voltage winding to the low voltage winding and so on).
2. Malfunctioning of a voltage regulator or wrong settings under manual control (symmetrical voltage decrease).
3. Low load compared to the reactive power generation (symmetrical voltage decrease).
4. Earth-faults in high impedance earthed systems causes, beside the high voltage in the neutral, high voltages in the two non-faulted phases, (unsymmetrical voltage increase).

OV2PTOV prevents sensitive equipment from running under conditions that could cause their overheating or stress of insulation material, and, thus, shorten their life time expectancy. In many cases, it is a useful function in circuits for local or remote automation processes in the power system.

8.2.3 Setting guidelines

The parameters for Two step overvoltage protection (OV2PTOV) are set via the local HMI or PCM600.

All the voltage conditions in the system where OV2PTOV performs its functions should be considered. The same also applies to the associated equipment, its voltage and time characteristic.

There is a very wide application area where general overvoltage functions are used. All voltage related settings are made as a percentage of a settable base primary voltage, which normally is set to the nominal voltage level (phase-to-phase) of the power system or the high voltage equipment under consideration.

The time delay for the OV2PTOV can sometimes be critical and related to the size of the overvoltage - a power system or a high voltage component can withstand smaller overvoltages for some time, but in case of large overvoltages the related equipment should be disconnected more rapidly.

Some applications and related setting guidelines for the voltage level are given below:

Equipment protection, such as for motors, generators, reactors and transformers

High voltage can cause overexcitation of the core and deteriorate the winding insulation. The setting must be above the highest occurring "normal" voltage and below the highest acceptable voltage for the equipment.

Equipment protection, capacitors

High voltage can deteriorate the dielectricum and the insulation. The setting must be above the highest occurring "normal" voltage and below the highest acceptable voltage for the capacitor.

High impedance earthed systems

In high impedance earthed systems, earth-faults cause a voltage increase in the non-faulty phases. OV2PTOV can be used to detect such faults. The setting must be above the highest occurring "normal" voltage and below the lowest occurring voltage during faults. A metallic single-phase earth-fault causes the non-faulted phase voltages to increase a factor of √3.

The following settings can be done for Two step overvoltage protection

GlobalBaseSel: Selects the global base value group used by the function to define (*IBase*), (*UBase*) and (*SBase*).

ConnType: Sets whether the measurement shall be phase-to-earth fundamental value, phase-to-phase fundamental value, phase-to-earth RMS value or phase-to-phase RMS value.

Operation: Off/On .

OV2PTOV measures the phase-to-earth voltages, or phase-to-phase voltages as selected. The function will operate if the voltage gets higher than the set percentage of the global set base voltage *UBase*. This means operation for phase-to-earth voltage over:

$$U > (\%) \cdot \frac{UBase(kV)}{\sqrt{3}}$$

(Equation 87)

and operation for phase-to-phase voltage over:

$$U > (\%) \cdot UBase(kV)$$

(Equation 88)

Characteristic1: This parameter gives the type of time delay to be used. The setting can be. *Definite time/Inverse Curve A/Inverse Curve B/Inverse Curve C*. The choice is highly dependent of the protection application.

OpModen: This parameter describes how many of the three measured voltages that should be above the set level to give operation for step n (n=step 1 and 2). The setting can be *1 out of 3, 2 out of 3 or 3 out of 3*. In most applications it is sufficient that one phase voltage is high to give operation. If the function shall be insensitive for single phase-to-earth faults *3 out of 3* can be chosen, because the voltage will normally rise in the non-faulted phases at single phase-to-earth faults.

Un>: Set overvoltage operating value for step n (n=step 1 and 2), given as % of the global parameter *UBase*. The setting is highly dependent of the protection application. Here it is essential to consider the Maximum voltage at non-faulted situations. Normally this voltage is less than 110% of nominal voltage.

tn: time delay for step n (n=step 1 and 2), given in s. The setting is highly dependent of the protection application. In many applications the protection

function has the task to prevent damages to the protected object. The speed might be important for example in case of protection of transformer that might be overexcited. The time delay must be co-ordinated with other automated actions in the system.

t1Min: Minimum operating time for inverse time characteristic for step 1, given in s. For very high voltages the overvoltage function, using inverse time characteristic, can give very short operation time. This might lead to unselective trip. By setting *t1Min* longer than the operation time for other protections such unselective tripping can be avoided.

k1: Time multiplier for inverse time characteristic. This parameter is used for co-ordination between different inverse time delayed undervoltage protections.

8.3 Two step residual overvoltage protection ROV2PTOV

8.3.1 Identification

Function description	IEC 61850 identification	IEC 60617 identification	ANSI/IEEE C37.2 device number
Two step residual overvoltage protection	ROV2PTOV	*3U0>*	59N

8.3.2 Application

Two step residual overvoltage protection ROV2PTOV is primarily used in high impedance earthed distribution networks, mainly as a backup for the primary earth-fault protection of the feeders and the transformer. To increase the security for different earth-fault related functions, the residual overvoltage signal can be used as a release signal. The residual voltage can be measured either at the transformer neutral or from a voltage transformer open delta connection. The residual voltage can also be calculated internally, based on measurement of the three-phase voltages.

In high impedance earthed systems the residual voltage will increase in case of any fault connected to earth. Depending on the type of fault and fault resistance the residual voltage will reach different values. The highest residual voltage, equal to three times the phase-to-earth voltage, is achieved for a single phase-to-earth fault. The residual voltage increases approximately to the same level in the whole system and does not provide any guidance in finding the faulted component. Therefore, ROV2PTOV is often used as a backup protection or as a release signal for the feeder earth-fault protection.

8.3.3 Setting guidelines

All the voltage conditions in the system where ROV2PTOV performs its functions should be considered. The same also applies to the associated equipment, its voltage and time characteristic.

There is a very wide application area where general single input or residual overvoltage functions are used. All voltage related settings are made as a percentage of a settable base voltage, which can be set to the primary nominal voltage (phase-phase) level of the power system or the high voltage equipment under consideration.

The time delay for ROV2PTOV are seldom critical, since residual voltage is related to earth-faults in a high impedance earthed system, and enough time must normally be given for the primary protection to clear the fault. In some more specific situations, where the single overvoltage protection is used to protect some specific equipment, the time delay is shorter.

Some applications and related setting guidelines for the residual voltage level are given below.

8.3.3.1 Equipment protection, such as for motors, generators, reactors and transformers

High residual voltage indicates earth-fault in the system, perhaps in the component to which Two step residual overvoltage protection (ROV2PTOV) is connected. For selectivity reasons to the primary protection for the faulted device ROV2PTOV must trip the component with some time delay. The setting must be above the highest occurring "normal" residual voltage and below the highest acceptable residual voltage for the equipment

8.3.3.2 Power supply quality

The setting must be above the highest occurring "normal" residual voltage and below the highest acceptable residual voltage, due to regulation, good practice or other agreements.

8.3.3.3 High impedance earthed systems

In high impedance earthed systems, earth faults cause a neutral voltage in the feeding transformer neutral. Two step residual overvoltage protection ROV2PTOV is used to trip the transformer, as a backup protection for the feeder earth-fault protection, and as a backup for the transformer primary earth-fault protection. The setting must be above the highest occurring "normal" residual voltage, and below the lowest occurring residual voltage during the faults under consideration. A metallic single-phase earth fault causes a transformer neutral to reach a voltage equal to the nominal phase-to-earth voltage.

The voltage transformers measuring the phase-to-earth voltages measure zero voltage in the faulty phase. The two healthy phases will measure full phase-to-phase voltage, as the earth is available on the faulty phase and the neutral has a full phase-to-earth voltage. The residual overvoltage will be three times the phase-to-earth voltage. See Figure 77.

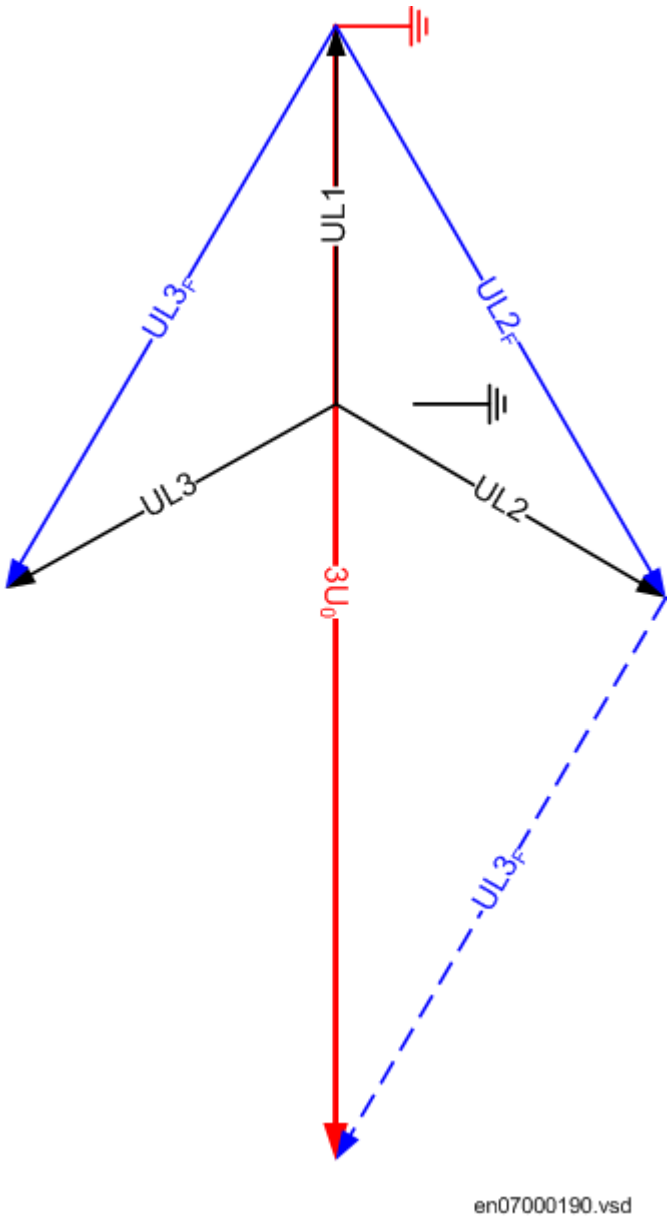

Figure 77: Earth fault in Non-effectively earthed systems

8.3.3.4 Direct earthed system

In direct earthed systems, an earth-fault on one phase indicates a voltage collapse in that phase. The two healthy phases will have normal phase-to-earth voltages. The residual sum will have the same value as phase-to-earth voltage. See Figure 78.

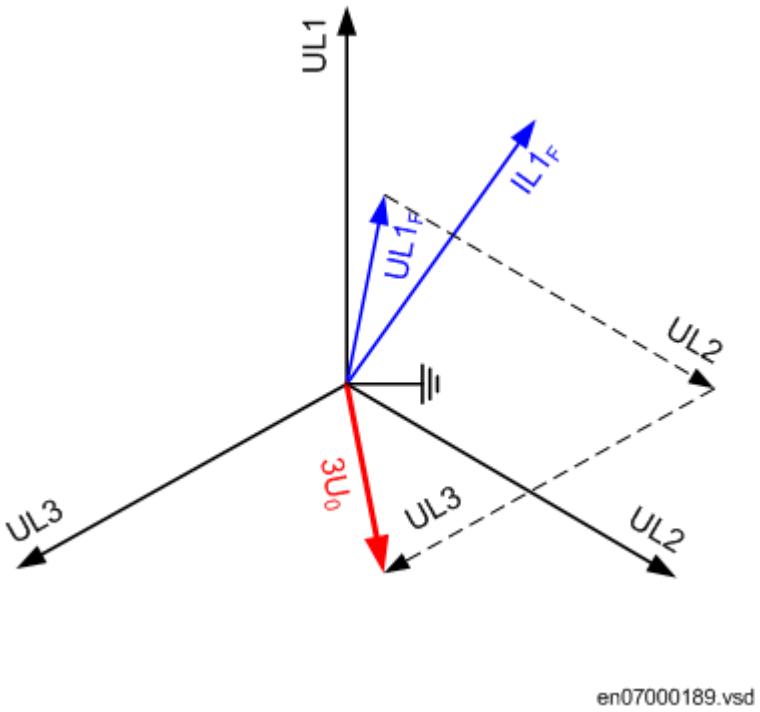

Figure 78: Earth fault in Direct earthed system

8.3.3.5 Settings for Two step residual overvoltage protection

GlobalBaseSel: Selects the global base value group used by the function to define (*IBase*), (*UBase*) and (*SBase*).

Operation: *Off* or *On*

UBase is used as voltage reference for the voltage. The voltage can be fed to the IED in different ways:

1. The IED is fed from a normal voltage transformer group where the residual voltage is created from the phase-to-earth voltages within the protection software.
2. The IED is fed from a broken delta connection normal voltage transformer group. In a open delta connection the protection is fed by the voltage 3U0 (single input). The setting chapter in the application manual explains how the analog input needs to be set.
3. The IED is fed from a single voltage transformer connected to the neutral point of a power transformer in the power system. In this connection the protection

is fed by the voltage UN=U0 (single input). The setting chapter in the application manual explains how the analog input needs to be set. ROV2PTOV will measure the residual voltage corresponding nominal phase-to-earth voltage for high impedance earthed system. The measurement will be based on the neutral voltage displacement .

Characteristic1: This parameter gives the type of time delay to be used. The setting can be, *Definite time* or *Inverse curve A* or *Inverse curve B* or *Inverse curve C*. The choice is highly dependent of the protection application.

Un>: Set overvoltage operate value for step *n* (*n*=step 1 and 2), given as % of residual voltage corresponding to global set parameter *UBase*:

$$U > (\%) \cdot UBase(kV) / \sqrt{3}$$

The setting is dependent of the required sensitivity of the protection and the system earthing. In non-effectively earthed systems the residual voltage can be maximum the rated phase-to-earth voltage, which should correspond to 100%.

In effectively earthed systems this value is dependent of the ratio Z0/Z1. The required setting to detect high resistive earth-faults must be based on network calculations.

tn: time delay of step *n* (*n*=step 1 and 2), given in s. The setting is highly dependent of the protection application. In many applications, the protection function has the task to prevent damages to the protected object. The speed might be important for example in case of protection of transformer that might be overexcited. The time delay must be co-ordinated with other automated actions in the system.

t1Min: Minimum operate time for inverse time characteristic for step 1, given in s. For very high voltages the overvoltage function, using inverse time characteristic, can give very short operation time. This might lead to unselective trip. By setting *t1Min* longer than the operation time for other protections such unselective tripping can be avoided.

k1: Time multiplier for inverse time characteristic. This parameter is used for co-ordination between different inverse time delayed undervoltage protections.

8.4 Overexcitation protection OEXPVPH

8.4.1 Identification

Function description	IEC 61850 identification	IEC 60617 identification	ANSI/IEEE C37.2 device number
Overexcitation protection	OEXPVPH	U/f >	24

8.4.2 Application

The Overexcitation protection (OEXPVPH) has current inputs to allow calculation of the load influence on the induced voltage. This gives a more exact measurement of the magnetizing flow. For power transformers with unidirectional load flow, the voltage to OEXPVPH should therefore be taken from the feeder side.

Heat accumulated in critical parts during a period of overexcitation will be reduced gradually when the excitation returns to the normal value. If a new period of overexcitation occurs after a short time interval, the heating will start from a higher level, therefore, OEXPVPH must have thermal memory. A fixed cooling time constant of 20 minutes is used.

The function should preferably be configured to use a three-phase voltage input if available. It then uses the positive sequence quantities of voltages and currents. When configured to a single phase-to-phase voltage input, a corresponding phase-to-phase current is calculated.

Analog measurements shall not be taken from any winding where a load tap changer is located.

Some different connection alternatives are shown in figure 79.

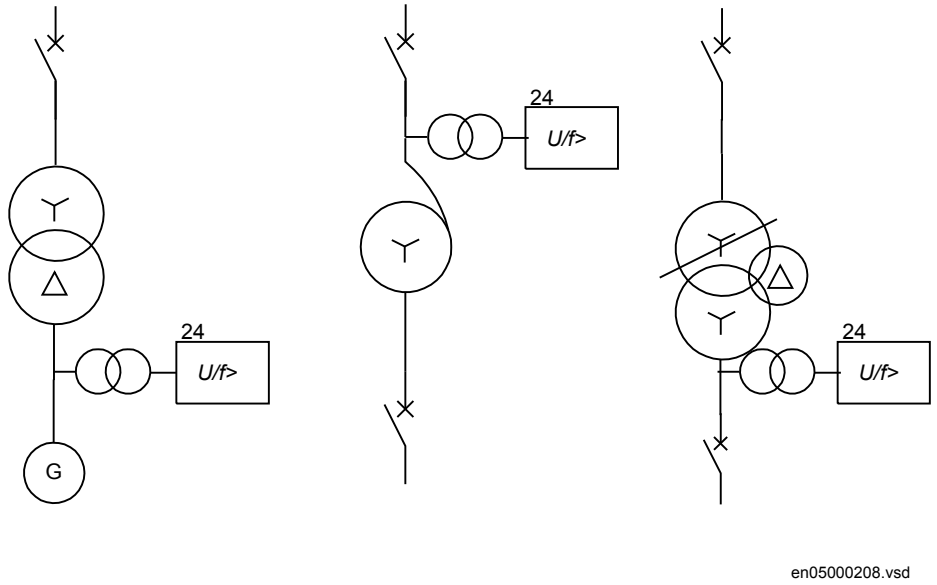

Figure 79: Alternative connections of an Overexcitation protection OEXPVPH(Volt/Hertz)

8.4.3 Setting guidelines

8.4.3.1 Recommendations for input and output signals

Please refer to the Technical manual for a list of setting parameters.

Binary Input signals

BLOCK: The input will block the operation of the Overexcitation protection OEXPVPH. The block input can be used to block the operation for a limited time during special service conditions.

RESET: OEXPVPH has a thermal memory, which can take a long time to reset. Activation of the RESET input will reset the function instantaneously.

Binary Output signals

START: The START output indicates that the setV/Hz>> level has been reached.

TRIP: The TRIP output is activated after the operate time for the U/f level has expired.

ALARM: The output is activated when the alarm level has been reached and the alarm timer has elapsed.

8.4.3.2 Settings

GlobalBaseSel: Selects the global base value group used by the function to define (*IBase*), (*UBase*) and (*SBase*).

Operation: The operation of the Overexcitation protection OEXPVPH can be set to *On*/*Off*.

V/Hz>: Operating level for the inverse characteristic. The operation is based on the relation between rated voltage and rated frequency and set as a percentage factor. Normal setting is around 108-110% depending of the capability curve for the transformer/generator.

V/Hz>>: Operating level for the *tMin* definite time delay used at high overvoltages. The operation is based on the relation between rated voltage and rated frequency and set as a percentage factor. Normal setting is around 110-180% depending of the capability curve of the transformer/generator. Setting should be above the knee-point when the characteristic starts to be straight on the high side.

kForIEEE: The time constant for the IEEE inverse characteristic. Select the one giving the best match to the transformer capability.

tMin: The operating times at voltages higher than the set *V/Hz>>*. The setting shall match capabilities on these high voltages. Typical setting can be 1-10 second.

AlarmLevel: Setting of the alarm level in percentage of the set trip level. The alarm level is normally set at around 98% of the trip level.

tAlarm: Setting of the time delay to alarm from when the alarm level has been reached. Typical setting is 5 seconds.

Section 9 Frequency protection

9.1 Underfrequency protection SAPTUF

9.1.1 Identification

Function description	IEC 61850 identification	IEC 60617 identification	ANSI/IEEE C37.2 device number
Underfrequency protection	SAPTUF	*f* <	81

9.1.2 Application

Underfrequency protection SAPTUF is applicable in all situations, where reliable detection of low fundamental power system frequency is needed. The power system frequency, and the rate of change of frequency, is a measure of the unbalance between the actual generation and the load demand. Low fundamental frequency in a power system indicates that the available generation is too low to fully supply the power demanded by the load connected to the power grid. SAPTUF detects such situations and provides an output signal, suitable for load shedding, generator boosting, HVDC-set-point change, gas turbine start up and so on. Sometimes shunt reactors are automatically switched in due to low frequency, in order to reduce the power system voltage and hence also reduce the voltage dependent part of the load.

SAPTUF is very sensitive and accurate and is used to alert operators that frequency has slightly deviated from the set-point, and that manual actions might be enough. The underfrequency signal is also used for overexcitation detection. This is especially important for generator step-up transformers, which might be connected to the generator but disconnected from the grid, during a roll-out sequence. If the generator is still energized, the system will experience overexcitation, due to the low frequency.

9.1.3 Setting guidelines

All the frequency and voltage magnitude conditions in the system where SAPTUF performs its functions should be considered. The same also applies to the associated equipment, its frequency and time characteristic.

There are two specific application areas for SAPTUF:

1. to protect equipment against damage due to low frequency, such as generators, transformers, and motors. Overexcitation is also related to low frequency
2. to protect a power system, or a part of a power system, against breakdown, by shedding load, in generation deficit situations.

The under frequency START value is set in Hz. All voltage magnitude related settings are made as a percentage of a global base voltage parameter. The UBase value should be set as a primary phase-to-phase value.

Some applications and related setting guidelines for the frequency level are given below:

Equipment protection, such as for motors and generators

The setting has to be well below the lowest occurring "normal" frequency and well above the lowest acceptable frequency for the equipment.

Power system protection, by load shedding

The setting has to be below the lowest occurring "normal" frequency and well above the lowest acceptable frequency for power stations, or sensitive loads. The setting level, the number of levels and the distance between two levels (in time and/or in frequency) depends very much on the characteristics of the power system under consideration. The size of the "largest loss of production" compared to "the size of the power system" is a critical parameter. In large systems, the load shedding can be set at a fairly high frequency level, and the time delay is normally not critical. In smaller systems the frequency START level has to be set at a lower value, and the time delay must be rather short.

9.2 Overfrequency protection SAPTOF

9.2.1 Identification

Function description	IEC 61850 identification	IEC 60617 identification	ANSI/IEEE C37.2 device number
Overfrequency protection	SAPTOF	*f* >	81

9.2.2 Application

Overfrequency protection function SAPTOF is applicable in all situations, where reliable detection of high fundamental power system frequency is needed. The

power system frequency, and rate of change of frequency, is a measure of the unbalance between the actual generation and the load demand. High fundamental frequency in a power system indicates that the available generation is too large compared to the power demanded by the load connected to the power grid. SAPTOF detects such situations and provides an output signal, suitable for generator shedding, HVDC-set-point change and so on. SAPTOF is very sensitive and accurate and can also be used to alert operators that frequency has slightly deviated from the set-point, and that manual actions might be enough.

9.2.3 Setting guidelines

All the frequency and voltage magnitude conditions in the system where SAPTOF performs its functions must be considered. The same also applies to the associated equipment, its frequency and time characteristic.

There are two specific application areas for SAPTOF:

1. to protect equipment against damage due to high frequency, such as generators, and motors
2. to protect a power system, or a part of a power system, against breakdown, by shedding generation, in over production situations.

The overfrequency start value is set in Hz. All voltage magnitude related settings are made as a percentage of a settable global base voltage parameter *UBase*. The UBase value should be set as a primary phase-to-phase value.

Some applications and related setting guidelines for the frequency level are given below:

Equipment protection, such as for motors and generators

The setting has to be well above the highest occurring "normal" frequency and well below the highest acceptable frequency for the equipment.

Power system protection, by generator shedding

The setting must be above the highest occurring "normal" frequency and below the highest acceptable frequency for power stations, or sensitive loads. The setting level, the number of levels and the distance between two levels (in time and/or in frequency) depend very much on the characteristics of the power system under consideration. The size of the "largest loss of load" compared to "the size of the power system" is a critical parameter. In large systems, the generator shedding can be set at a fairly low frequency level, and the time delay is normally not critical. In smaller systems the frequency START level has to be set at a higher value, and the time delay must be rather short.

9.3 Rate-of-change frequency protection SAPFRC

9.3.1 Identification

Function description	IEC 61850 identification	IEC 60617 identification	ANSI/IEEE C37.2 device number
Rate-of-change frequency protection	SAPFRC	*df/dt* ≷	81

9.3.2 Application

Rate-of-change frequency protection (SAPFRC), is applicable in all situations, where reliable detection of change of the fundamental power system voltage frequency is needed. SAPFRC can be used both for increasing frequency and for decreasing frequency. SAPFRC provides an output signal, suitable for load shedding or generator shedding, generator boosting, HVDC-set-point change, gas turbine start up and so on. Very often SAPFRC is used in combination with a low frequency signal, especially in smaller power systems, where loss of a fairly large generator will require quick remedial actions to secure the power system integrity. In such situations load shedding actions are required at a rather high frequency level, but in combination with a large negative rate-of-change of frequency the underfrequency protection can be used at a rather high setting.

9.3.3 Setting guidelines

The parameters for Rate-of-change frequency protection SAPFRC are set via the local HMI or or through the Protection and Control Manager (PCM600).

All the frequency and voltage magnitude conditions in the system where SAPFRC performs its functions should be considered. The same also applies to the associated equipment, its frequency and time characteristic.

There are two specific application areas for SAPFRC:

1. to protect equipment against damage due to high or too low frequency, such as generators, transformers, and motors
2. to protect a power system, or a part of a power system, against breakdown by shedding load or generation, in situations where load and generation are not in balance.

SAPFRC is normally used together with an overfrequency or underfrequency function, in small power systems, where a single event can cause a large imbalance between load and generation. In such situations load or generation shedding has to take place very quickly, and there might not be enough time to wait until the frequency signal has reached an abnormal value. Actions are therefore taken at a frequency level closer to the primary nominal level, if the rate-of-change frequency is large (with respect to sign).

SAPFRCSTART value is set in Hz/s. All voltage magnitude related settings are made as a percentage of a settable base voltage, which normally is set to the primary nominal voltage level (phase-phase) of the power system or the high voltage equipment under consideration.

SAPFRC is not instantaneous, since the function needs some time to supply a stable value. It is recommended to have a time delay long enough to take care of signal noise. However, the time, rate-of-change frequency and frequency steps between different actions might be critical, and sometimes a rather short operation time is required, for example, down to 70 ms.

Smaller industrial systems might experience rate-of-change frequency as large as 5 Hz/s, due to a single event. Even large power systems may form small islands with a large imbalance between load and generation, when severe faults (or combinations of faults) are cleared - up to 3 Hz/s has been experienced when a small island was isolated from a large system. For more "normal" severe disturbances in large power systems, rate-of-change of frequency is much less, most often just a fraction of 1.0 Hz/s.

Section 10 Secondary system supervision

10.1 Breaker close/trip circuit monitoring TCSSCBR

10.1.1 Identification

Function description	IEC 61850 identification	IEC 60617 identification	ANSI/IEEE C37.2 device number
Breaker close/trip circuit monitoring	TCSSCBR	-	-

10.1.2 Application

TCSSCBR detects faults in the electrical control circuit of the circuit breaker. The function can supervise both open and closed coil circuits. This kind of supervision is necessary to find out the vitality of the control circuits continuously.

Trip circuit supervision generates a current of approximately 1.0 mA through the supervised circuit. It must be ensured that this current will not cause a latch up of the controlled object.

To protect the trip circuit supervision circuits in the IED, the output contacts are provided with parallel transient voltage suppressors. The breakdown voltage of these suppressors is 400 +/– 20 V DC.

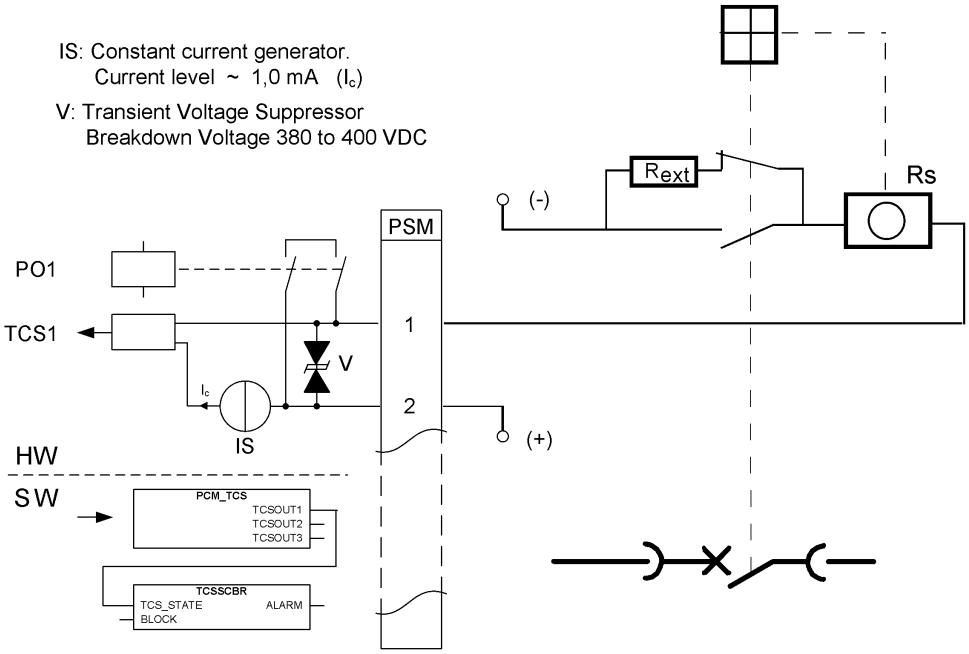

Figure 80: Operating principle of the trip-circuit supervision with an external resistor. The TCSSCBR blocking switch is not required since the external resistor is used.

If TCS is required only in a closed position, the external shunt resistance can be omitted. When the circuit breaker is in the open position, TCS sees the situation as a faulty circuit. One way to avoid TCS operation in this situation would be to block the supervision function whenever the circuit breaker is open.

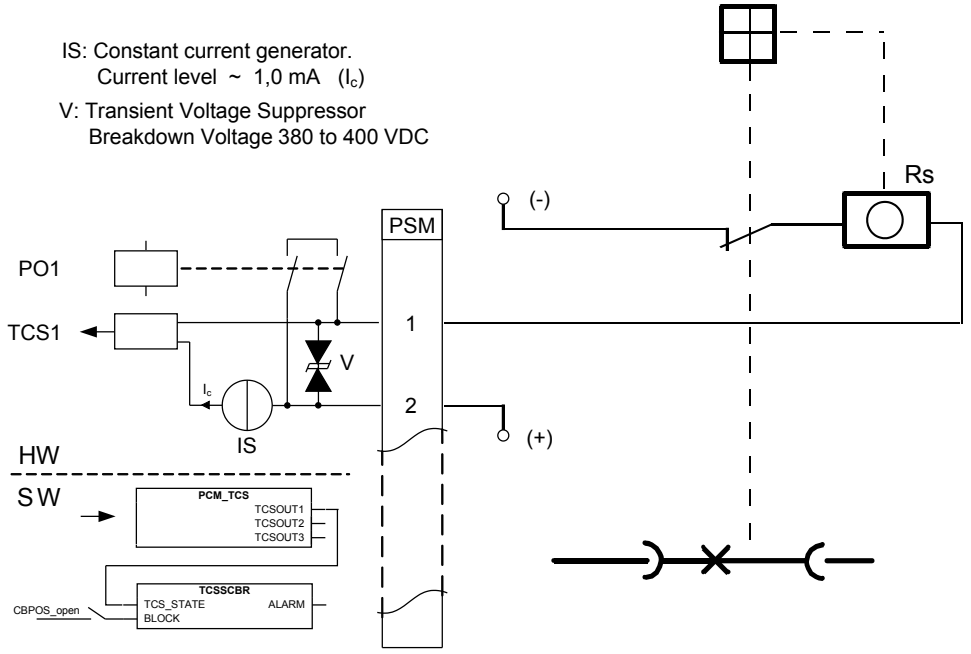

Figure 81: Operating principle of the trip-circuit supervision without an external resistor. The circuit breaker open indication is set to block TCSSCBR when the circuit breaker is open.

Trip-circuit supervision and other trip contacts

It is typical that the trip circuit contains more than one trip contact in parallel, for example in transformer feeders where the trip of a Buchholz relay is connected in parallel with the feeder terminal and other relays involved.

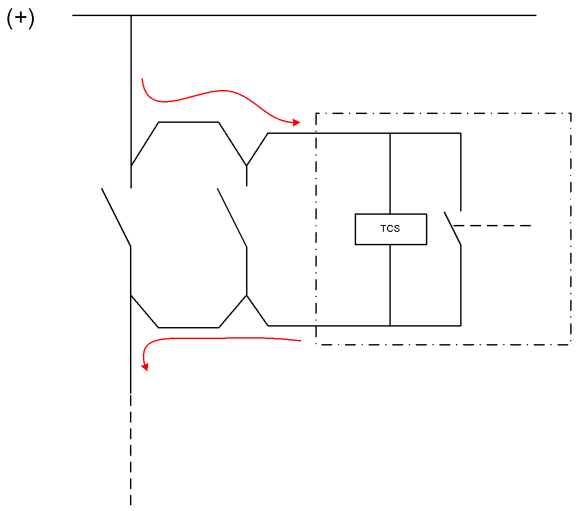

Figure 82: Constant test current flow in parallel trip contacts and trip-circuit supervision

Several trip-circuit supervision functions parallel in circuit

Not only the trip circuit often have parallel trip contacts, it is also possible that the circuit has multiple TCS circuits in parallel. Each TCS circuit causes its own supervising current to flow through the monitored coil and the actual coil current is a sum of all TCS currents. This must be taken into consideration when determining the resistance of R_{ext}.

Trip-circuit supervision with auxiliary relays

Many retrofit projects are carried out partially, that is, the old electromechanical relays are replaced with new ones but the circuit breaker is not replaced. This creates a problem that the coil current of an old type circuit breaker can be too high for the protection IED trip contact to break.

The circuit breaker coil current is normally cut by an internal contact of the circuit breaker. In case of a circuit breaker failure, there is a risk that the protection IED trip contact is destroyed since the contact is obliged to disconnect high level of electromagnetic energy accumulated in the trip coil.

An auxiliary relay can be used between the protection IED trip contact and the circuit breaker coil. This way the breaking capacity question is solved, but the TCS circuit in the protection IED monitors the healthy auxiliary relay coil, not the circuit breaker coil. The separate trip circuit supervision relay is applicable for this to supervise the trip coil of the circuit breaker.

Dimensioning of the external resistor

Under normal operating conditions, the applied external voltage is divided between the relay's internal circuit and the external trip circuit so that at the minimum 10 V (3...10 V) remains over the relay's internal circuit. Should the external circuit's resistance be too high or the internal circuit's too low, for example due to welded relay contacts, the fault is detected.

Mathematically, the operation condition can be expressed as:

$$U_c - (R_{ext} + R_s) \times I_c \geq 10V\ DC$$

(Equation 89)

U_c	Operating voltage over the supervised trip circuit
I_c	Measuring current through the trip circuit, appr. 1.0 mA (0.85...1.20 mA)
R_{ext}	external shunt resistance
R_s	trip coil resistance

If the external shunt resistance is used, it has to be calculated not to interfere with the functionality of the supervision or the trip coil. Too high a resistance causes too high a voltage drop, jeopardizing the requirement of at least 20 V over the internal circuit, while a resistance too low can enable false operations of the trip coil.

Table 19: Values recommended for the external resistor R_{ext}

Operating voltage U_c	Shunt resistor R_{ext}
48 V DC	10 kΩ, 5 W
60 V DC	22 kΩ, 5 W
110 V DC	33 kΩ, 5 W
220 V DC	68 kΩ, 5 W

Due to the requirement that the voltage over the TCSSCBR contact must be 20V or higher, the correct operation is not guaranteed with auxiliary operating voltages lower than 48V DC because of the voltage drop in R_{ext} and the operating coil or even voltage drop of the feeding auxiliary voltage system which can cause too low voltage values over the TCSSCBR contact. In this case, erroneous alarming can occur.

At lower (<48V DC) auxiliary circuit operating voltages, it is recommended to use the circuit breaker position to block unintentional operation of TCSSCBR. The use of the position indication is described earlier in this chapter.

Section 11 Control

11.1 Apparatus control

11.1.1 Identification

Function description	IEC 61850 identification	IEC 60617 identification	ANSI/IEEE C37.2 device number
Bay control	QCBAY	-	-
Local remote	LOCREM	-	-
Local remote control	LOCREMCTRL	-	-

11.1.2 Application

The apparatus control is a function for control and supervising of circuit breakers, disconnectors, and earthing switches within a bay. Permission to operate is given after evaluation of conditions from other functions such as interlocking, synchrocheck, operator place selection and external or internal blockings.

The complete apparatus control function is not included in this product, and the information below is included for understanding of the principle for the use of QCBAY, LOCREM, and LOCREMCTRL for the selection of the operator place.

Figure 83 gives an overview from what places the apparatus control function receive commands. Commands to an apparatus can be initiated from the Control Centre (CC), the station HMI or the local HMI on the IED front.

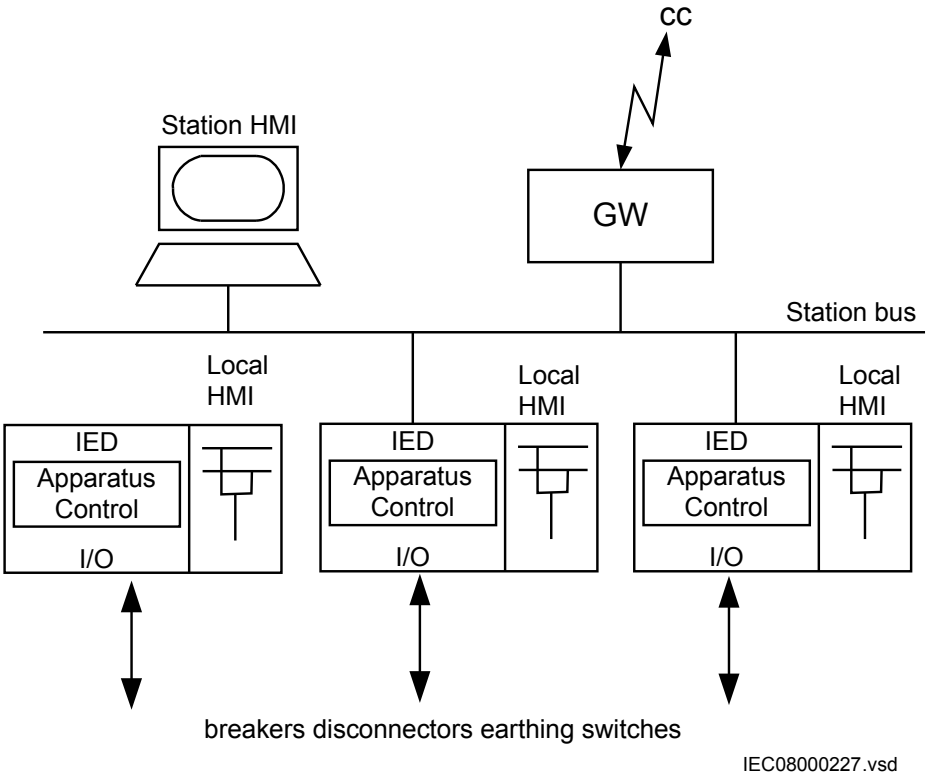

Figure 83: Overview of the apparatus control functions

Features in the apparatus control function:

- Operation of primary apparatuses
- Select-Execute principle to give high security
- Selection function to prevent simultaneous operation
- Selection and supervision of operator place
- Command supervision
- Block/deblock of operation
- Block/deblock of updating of position indications
- Substitution of position indications
- Overriding of interlocking functions
- Overriding of synchrocheck
- Operation counter
- Suppression of Mid position

The apparatus control function is realized by means of a number of function blocks designated:

- Switch controller SCSWI
- Circuit breaker SXCBR
- Circuit switch SXSWI
- Position evaluation POS_EVAL
- Select release SELGGIO

- Bay control QCBAY
- Local remote LOCREM
- Local remote control LOCREMCTRL

SCSWI, SXCBR, QCBAY and SXSWI are logical nodes according to IEC 61850. The signal flow between these function blocks appears in figure 84. The function Logical node Interlocking (SCILO) in the figure 84 is the logical node for interlocking.

Control operation can be performed from the local IED HMI. If the administrator has defined users with the UMT tool, then the local/remote switch is under authority control. If not, the default (factory) user is the SuperUser that can perform control operations from the local IED HMI without LogOn. The default position of the local/remote switch is on remote.

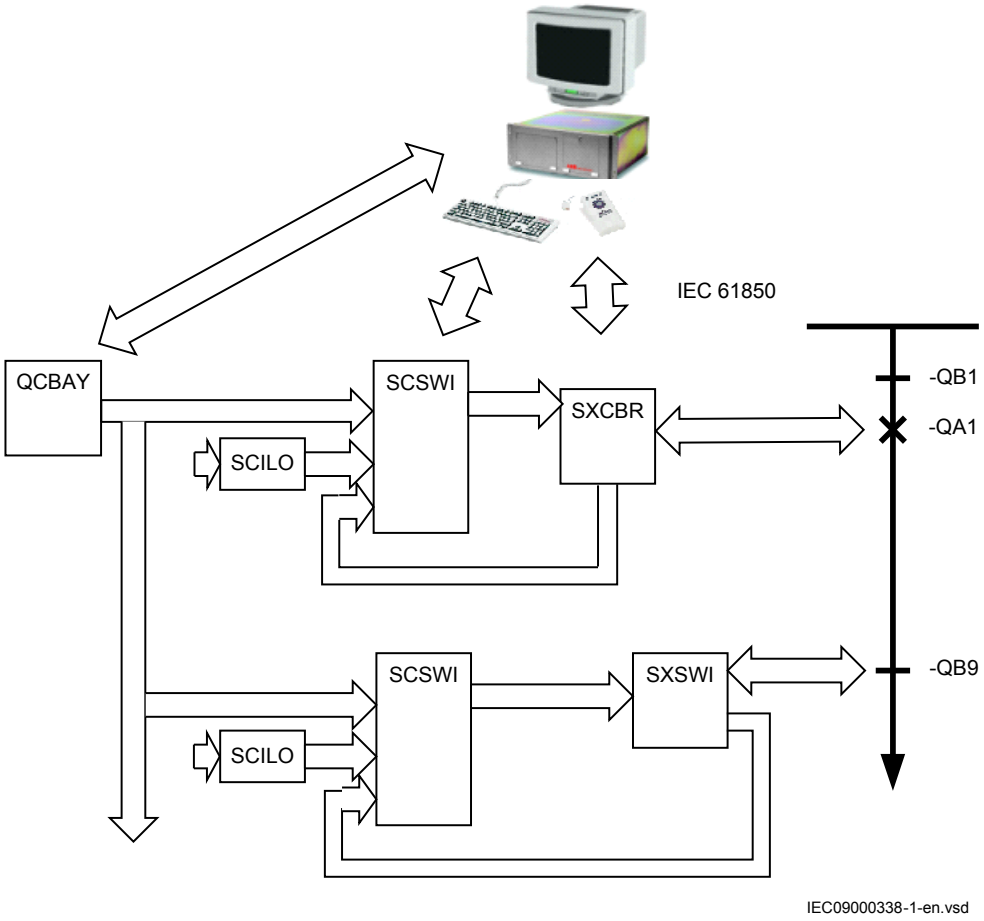

Figure 84: Signal flow between apparatus control function blocks

The IEC 61850 communication has always priority over binary inputs, e.g. a block command on binary inputs will not prevent commands over IEC 61850.

Bay control (QCBAY)

The Bay control (QCBAY) is used to handle the selection of the operator place for the bay. The function gives permission to operate from two types of locations either from Remote (for example, control centre or station HMI) or from Local (local HMI on the IED) or from all (Local and Remote). The Local/Remote switch position can also be set to Off, which means no operator place selected that is, operation is not possible neither from local nor from remote.

QCBAY also provides blocking functions that can be distributed to different apparatuses within the bay. There are two different blocking alternatives:

- Blocking of update of positions
- Blocking of commands

The function does not have a corresponding functionality defined in the IEC 61850 standard, which means that this function is included as a vendor specific logical node.

11.1.3 Interaction between modules

A typical bay with apparatus control function consists of a combination of logical nodes or functions that are described here:

- The Switch controller (SCSWI) initializes all operations for one apparatus and performs the actual switching and is more or less the interface to the drive of one apparatus. It includes the position handling as well as the control of the position.
- The Circuit breaker (SXCBR) is the process interface to the circuit breaker for the apparatus control function.
- The Circuit switch (SXSWI) is the process interface to the disconnector or the earthing switch for the apparatus control function.
- The Bay control (QCBAY) fulfils the bay-level functions for the apparatuses, such as operator place selection and blockings for the complete bay.
- The function (SELGGIO), deals with reservation of the bay.
- The Four step overcurrent protection (OC4PTOC) trips the breaker.
- The Protection trip logic (SMPPTRC) connects the "trip" outputs of one or more protection functions to a common "trip" to be transmitted to SXCBR.
- The Autorecloser (SMBRREC) consists of the facilities to automatically close a tripped breaker with respect to a number of configurable conditions.
- The logical node Interlocking (SCILO) provides the information to SCSWI whether it is permitted to operate due to the switchyard topology. The interlocking conditions are evaluated with separate logic and connected to SCILO .
- The Synchrocheck, energizing check, and synchronizing (SESRSYN) calculates and compares the voltage phasor difference from both sides of an open breaker with predefined switching conditions (synchrocheck). Also the case that one side is dead (energizing-check) is included.
- The logical node Generic Automatic Process Control, GAPC, is an automatic function that reduces the interaction between the operator and the system.

With one command, the operator can start a sequence that will end with a connection of a process object (for example a line) to one of the possible busbars.

The overview of the interaction between these functions is shown in figure 85 below.

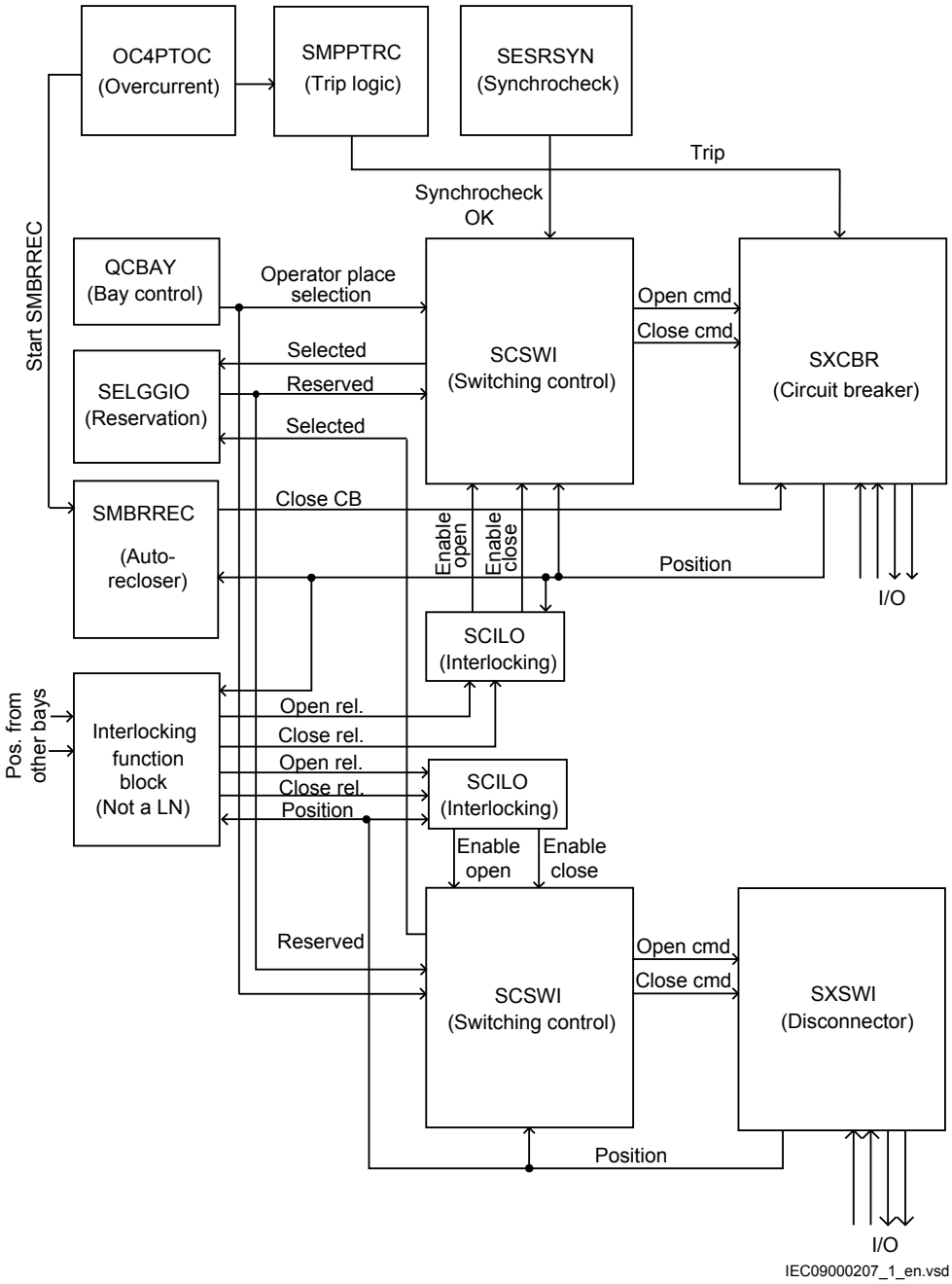

Figure 85: Example overview of the interactions between functions in a typical bay

11.1.4 Setting guidelines

The setting parameters for the apparatus control function are set via the local HMI or PCM600.

11.1.4.1 Bay control (QCBAY)

If the parameter *AllPSTOValid* is set to *No priority*, all originators from local and remote are accepted without any priority.

11.2 Voltage control

11.2.1 Identification

Function description	IEC 61850 identification	IEC 60617 identification	ANSI/IEEE C37.2 device number
Automatic voltage control for tap changer	TR8ATCC	U↕I	90
Tap changer control and supervision, 6 binary inputs	TCMYLTC	↕	84

11.2.2 Application

When the load in a power network is increased the voltage will decrease and vice versa. To maintain the network voltage at a constant level, power transformers are usually equipped with an load tap changer. This alters the power transformer ratio in a number of predefined steps and in that way changes the voltage. Each step usually represents a change in voltage of approximately 0.5-1.7%.

The voltage control function is intended for control of power transformers with a motor driven load tap changer. The function is designed to regulate the voltage at the secondary side of the power transformer. The control method is based on a step-by-step principle which means that a control pulse, one at a time, will be issued to the tap changer mechanism to move it one position up or down. The length of the control pulse can be set within a wide range to accommodate different types of tap changer mechanisms. The pulse is generated whenever the measured voltage, for a given time, deviates from the set reference value by more than the preset deadband (degree of insensitivity).

The voltage can be controlled at the point of voltage measurement, as well as a load point located out in the network. In the latter case, the load point voltage is

calculated based on the measured load current and the known impedance from the voltage measuring point to the load point.

The automatic voltage control can be either for a single transformer, or for parallel transformers. Parallel control of power transformers with an IED can be made in three alternative ways:

- With the master-follower method
- With the reverse reactance method
- With the circulating current method

Of these alternatives, the first and the last require communication between the function control blocks of the different transformers, whereas the middle alternative does not require any communication.

The voltage control includes many extra features such as possibility to avoid simultaneous tapping of parallel transformers, extensive tap changer monitoring including contact wear and hunting detection, monitoring of the power flow in the transformer so that for example, the voltage control can be blocked if the power reverses and so on.

The voltage control function is built up by two function blocks which both are logical nodes in IEC 61850-8-1:

- Automatic voltage control for tap changer, TR8ATCC for parallel control.
- Tap changer control and supervision, 6 binary inputs, TCMYLTC

Automatic voltage control for tap changer, TR8ATCC is a function designed to automatically maintain the voltage at the LV-side side of a power transformer within given limits around a set target voltage. A raise or lower command is generated whenever the measured voltage, for a given period of time, deviates from the set target value by more than the preset deadband value (degree of insensitivity). A time delay (inverse or definite time) is set to avoid unnecessary operation during shorter voltage deviations from the target value, and in order to coordinate with other automatic voltage controllers in the system.

TCMYLTCis an interface between the Automatic voltage control for tap changer, TR8ATCC and the transformer load tap changer itself. More specifically this means that it gives command-pulses to a power transformer motor driven load tap changer and that it receives information from the load tap changer regarding tap position, progress of given commands, and so on.

TCMYLTC also serves the purpose of giving information about tap position to the transformer differential protection.

Control location local/remote

The tap changer can be operated from the front of the IED or from a remote place alternatively. On the IED front there is a local remote switch that can be used to select the operator place. For this functionality the Apparatus control function

blocks Bay control (QCBAY), Local remote (LOCREM) and Local remote control (LOCREMCTRL) are used.

Information about the control location is given to TR8ATCC function through connection of the Permitted Source to Operate (PSTO) output of the QCBAY function block to the input PSTO of the TR8ATCC function block.

Control Mode

The control mode of the automatic voltage control for tap changer function, TR8ATCC for parallel control can be:

- Manual
- Automatic

The control mode can be changed from the local location via the command menu on the local HMI under **Main menu/ Control/Commands/TR8ATCC (90)/ 1:TR8ATCC**, or changed from a remote location via binary signals connected to the MANCTRL, AUTOCTRL inputs on TR8ATCC function block.

Measured Quantities

In normal applications, the LV side of the transformer is used as the voltage measuring point. If necessary, the LV side current is used as load current to calculate the line-voltage drop to the regulation point.

Automatic voltage control for tap changer, TR8ATCC function block has three inputs I3P1, I3P2 and U3P2 corresponding to HV-current, LV-current and LV-voltage respectively. These analog quantities are fed to the IED via the transformer input module, the Analog to Digital Converter and thereafter a Pre-Processing Block. In the Pre-Processing Block, a great number of quantities for example, phase-to-phase analog values, sequence values, max value in a three phase group etc., are derived. The different function blocks in the IED are then “subscribing” on selected quantities from the pre-processing blocks. In case of TR8ATCC, there are the following possibilities:

- I3P1 represents a three-phase group of phase current with the highest current in any of the three phases considered. As only the highest of the phase current is considered, it is also possible to use one single-phase current as well as two-phase currents. In these cases, the currents that are not used will be zero.
- For I3P2 and U3P2 the setting alternatives are: any individual phase current/ voltage, as well as any combination of phase-phase current/voltage or the positive sequence current/voltage. Thus, single-phase as well as, phase-phase or three-phase feeding on the LV-side is possible but it is commonly selected for current and voltage.

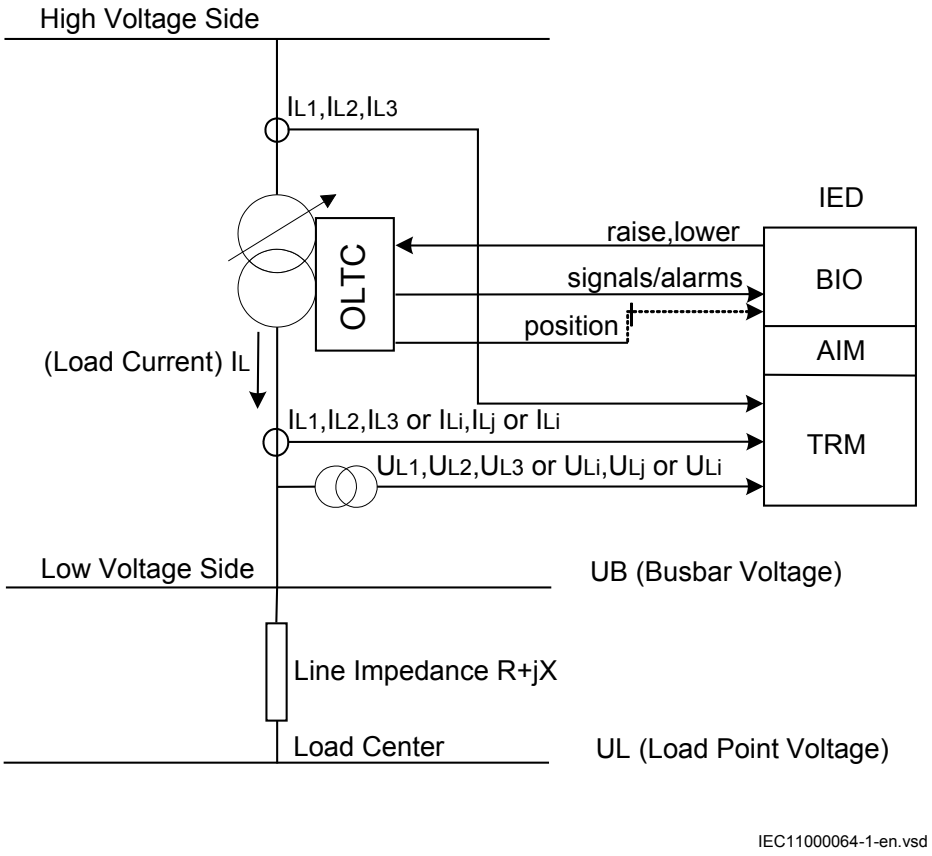

Figure 86: Signal flow for a single transformer with voltage control

On the HV side, the three-phase current is normally required in order to feed the three-phase over current protection that blocks the load tap changer in case of over-current above harmful levels.

The voltage measurement on the LV-side can be made single phase-earth. However, it shall be remembered that this can only be used in solidly earthed systems, as the measured phase-earth voltage can increase with as much as a factor √3 in case of earth faults in a non-solidly earthed system.

The analog input signals are normally common with other functions in the IED for example, protection functions.

The LV-busbar voltage is designated UB, the load current I_L and load point voltage U_L.

Automatic voltage control for a single transformer

Automatic voltage control for tap changer, parallel control TR8ATCC measures the magnitude of the busbar voltage UB. If no other additional features are enabled (line voltage drop compensation), this voltage is further used for voltage regulation.

TR8ATCC then compares this voltage with the set voltage, *USet* and decides which action should be taken. To avoid unnecessary switching around the setpoint, a deadband (degree of insensitivity) is introduced. The deadband is symmetrical around *USet*, see figure 87, and it is arranged in such a way that there is an outer and an inner deadband. Measured voltages outside the outer deadband start the timer to initiate tap commands, whilst the sequence resets when the measured voltage is once again back inside the inner deadband. One half of the outer deadband is denoted ΔU. The setting of ΔU, setting *Udeadband* should be set to a value near to the power transformer's tap changer voltage step (typically 75–125% of the tap changer step).

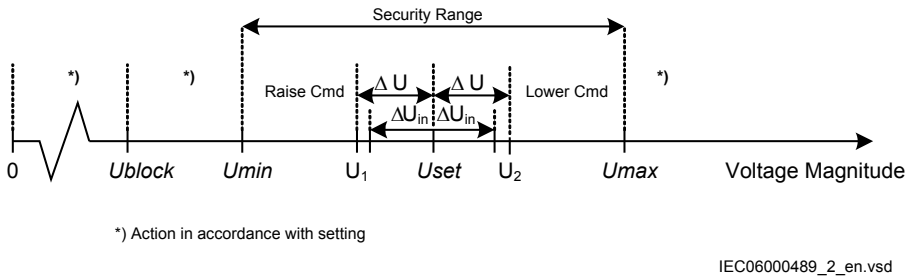

Figure 87: Control actions on a voltage scale

During normal operating conditions the busbar voltage UB, stays within the outer deadband (interval between U1 and U2 in figure 87). In that case no actions will be taken by TR8ATCC. However, if UB becomes smaller than U1, or greater than U2, an appropriate lower or raise timer will start. The timer will run as long as the measured voltage stays outside the inner deadband. If this condition persists longer than the preset time delay, TR8ATCC will initiate that the appropriate ULOWER or URAISE command will be sent from Tap changer control and supervision, 6 binary inputs TCMYLTC to the transformer load tap changer. If necessary, the procedure will be repeated until the magnitude of the busbar voltage again falls within the inner deadband. One half of the inner deadband is denoted ΔU_{in}. The inner deadband ΔU_{in}, setting *UDeadbandInner* should be set to a value smaller than ΔU. It is recommended to set the inner deadband to 25-70% of the ΔU value.

This way of working is used by TR8ATCC while the busbar voltage is within the security range defined by settings *Umin* and *Umax*.

A situation where UB falls outside this range will be regarded as an abnormal situation.

When U_B falls below setting *Ublock*, or alternatively, falls below setting *Umin* but still above *Ublock*, or rises above *Umax*, actions will be taken in accordance with settings for blocking conditions (refer to table 23).

If the busbar voltage rises above *Umax*, TR8ATCC can initiate one or more fast step down commands (ULOWER commands) in order to bring the voltage back into the security range (settings *Umin*, and *Umax*). The fast step down function

operation can be set in one of the following three ways: off /auto/auto and manual, according to the setting *FSDMode*. The ULOWER command, in fast step down mode, is issued with the settable time delay *tFSD*.

The measured RMS magnitude of the busbar voltage U_B is shown on the local HMI as value BUSVOLT under **Main menu/Tests/Function status/Control/ TR8ATCC (90)/1:TR8ATCC/Outputs**.

Time characteristic

The time characteristic defines the time that elapses between the moment when measured voltage exceeds the deadband interval until the appropriate URAISE or ULOWER command is initiated.

The purpose of the time delay is to prevent unnecessary load tap changer operations caused by temporary voltage fluctuations and to coordinate load tap changer operations in radial networks in order to limit the number of load tap changer operations. This can be done by setting a longer time delay closer to the consumer and shorter time delays higher up in the system.

The first time delay, *t1*, is used as a time delay (usually long delay) for the first command in one direction. It can have a definite or inverse time characteristic, according to the setting *t1Use* (Constant/Inverse). For inverse time characteristics larger voltage deviations from the *USet* value will result in shorter time delays, limited by the shortest time delay equal to the *tMin* setting. This setting should be coordinated with the tap changer mechanism operation time.

Constant (definite) time delay is independent of the voltage deviation.

The inverse time characteristic for the first time delay follows the formulas:

$$DA = |UB - USet|$$

(Equation 90)

$$D = \frac{DA}{\Delta U}$$

(Equation 91)

$$tMin = \frac{t_1}{D}$$

(Equation 92)

Where:

DA absolute voltage deviation from the set point

D relative voltage deviation in respect to set deadband value

For the last equation, the condition *t1* > *tMin* shall also be fulfilled. This practically means that *tMin* will be equal to the set *t1* value when absolute voltage deviation DA is equal to ΔU (relative voltage deviation D is equal to 1). For other values see figure 88. It should be noted that operating times, shown in the figure 88 are for 30, 60, 90, 120, 150 & 180 seconds settings for *t1* and 10 seconds for *tMin*.

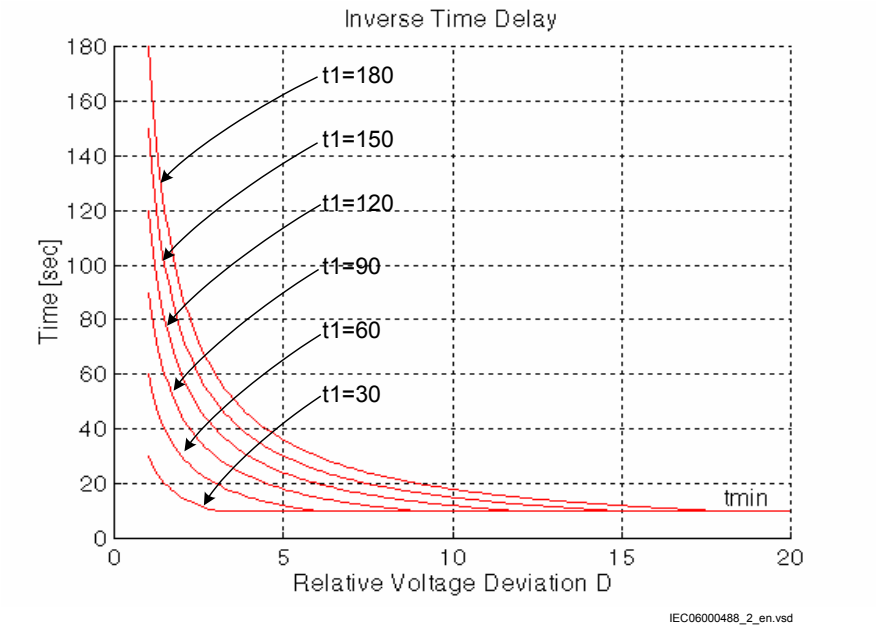

Figure 88: Inverse time characteristic for TR8ATCC

The second time delay, *t2*, will be used for consecutive commands (commands in the same direction as the first command). It can have a definite or inverse time characteristic according to the setting *t2Use* (Constant/Inverse). Inverse time characteristic for the second time delay follows the similar formulas as for the first time delay, but the *t2* setting is used instead of *t1*.

Line voltage drop

The purpose with the line voltage drop compensation is to control the voltage, not at the power transformer low voltage side, but at a point closer to the load point.

Figure 89 shows the vector diagram for a line modelled as a series impedance with the voltage U_B at the LV busbar and voltage U_L at the load center. The load current on the line is I_L, the line resistance and reactance from the station busbar to the load point are R_L and X_L. The angle between the busbar voltage and the current, is φ. If all these parameters are known U_L can be obtained by simple vector calculation.

Values for R_L and X_L are given as settings in primary system ohms. If more than one line is connected to the LV busbar, an equivalent impedance should be calculated and given as a parameter setting.

The line voltage drop compensation function can be turned *On*/*Off* by the setting parameter *OperationLDC*. When it is enabled, the voltage U_L will be used by the

Automatic voltage control for tap changer function, TR8ATCC for parallel control for voltage regulation instead of U_B. However, TR8ATCC will still perform the following two checks:

1. The magnitude of the measured busbar voltage U_B, shall be within the security range, (setting *Umin* and *Umax*). If the busbar voltage falls-out of this range the line voltage drop compensation calculations will be temporarily stopped until the voltage U_B comes back within the range.
2. The magnitude of the calculated voltage U_L at the load point, can be limited such that it is only allowed to be equal to or smaller than the magnitude of U_B, otherwise U_B will be used. However, a situation where $U_L>U_B$ can be caused by a capacitive load condition, and if the wish is to allow for a situation like that, the limitation can be removed by setting the parameter *OperCapaLDC* to *On*.

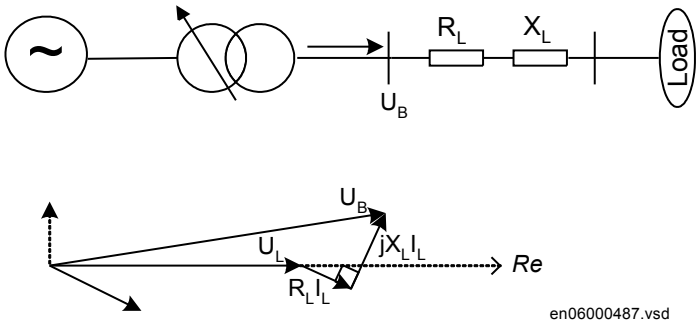

Figure 89: Vector diagram for line voltage drop compensation

The calculated load voltage U_L is shown on the local HMI as value ULOAD under **Main menu/Control/Commands/TR8ATCC (90)/X:TR8ATCC**.

Load voltage adjustment

Due to the fact that most loads are proportional to the square of the voltage, it is possible to provide a way to shed part of the load by decreasing the supply voltage a couple of percent.

It is possible to do this voltage adjustment in two different ways in Automatic voltage control for tap changer, parallel control TR8ATCC:

1. Automatic load voltage adjustment, proportional to the load current.
2. Constant load voltage adjustment with four different preset values.

In the first case the voltage adjustment is dependent on the load and maximum voltage adjustment should be obtained at rated load of the transformer.

In the second case, a voltage adjustment of the set point voltage can be made in four discrete steps (positive or negative) activated with binary signals connected to TR8ATCC function block inputs LVA1, LVA2, LVA3 and LVA4. The corresponding voltage adjustment factors are given as setting parameters

LVAConst1, *LVAConst2*, *LVAConst3* and *LVAConst4*. The inputs are activated with a pulse, and the latest activation of anyone of the four inputs is valid. Activation of the input LVARESET in TR8ATCC block, brings the voltage setpoint back to *USet*.

With these factors, TR8ATCC adjusts the value of the set voltage *USet* according to the following formula:

$$U_{setadjust} = U_{set} + S_a \times \frac{I_L}{IBase} + S_{ci}$$

(Equation 93)

$U_{set,\ adjust}$	Adjusted set voltage in per unit
USet	Original set voltage: Base quality is U_{n2}
S_a	Automatic load voltage adjustment factor, setting *VRAuto*
I_L	Load current
IBase	Rated current, LV winding (for winding 2, which is defined in a global base function, selected with setting *GlobalBaseSel2* for TR8ATCC)
S_{ci}	Constant load voltage adjust. factor for active input *i* (corresponding to *LVAConst1, LVAConst2, LVAConst3 and LVAConst4*)

It shall be noted that the adjustment factor is negative in order to decrease the load voltage and positive in order to increase the load voltage. After this calculation $U_{set,\ adjust}$ will be used by TR8ATCC for voltage regulation instead of the original value *USet*. The calculated set point voltage $U_{Set,\ adjust}$ is shown on the local HMI as a service value USETOUT under and **Main menu/Control/Commands/ TR8ATCC (90)/X:TR8ATCC**.

Automatic control of parallel transformers

Parallel control of power transformers means control of two or more power transformers connected to the same busbar on the LV side and in most cases also on the HV side. Special measures must be taken in order to avoid a runaway situation where the tap changers on the parallel transformers gradually diverge and end up in opposite end positions.

Three alternative methods can be used in an IED for parallel control with the Automatic voltage control for tap changer, TR8ATCC:

- master-follower method
- reverse reactance method
- circulating current method

In order to realize the need for special measures to be taken when controlling transformers in parallel, consider first two parallel transformers which are supposed to be equal with similar tap changers. If they would each be in automatic voltage control for single transformer that is, each of them regulating the voltage

on the LV busbar individually without any further measures taken, then the following could happen. Assuming for instance that they start out on the same tap position and that the LV busbar voltage U_B is within *USet* ± ΔU, then a gradual increase or decrease in the load would at some stage make U_B fall outside *USet* ± ΔU and a lower or raise command would be initiated. However, the rate of change of voltage would normally be slow, which would make one tap changer act before the other. This is unavoidable and is due to small inequalities in measurement and so on. The one tap changer that responds first on a low voltage condition with a raise command will be prone to always do so, and vice versa. The situation could thus develop such that, for example T1 responds first to a low busbar voltage with a raise command and thereby restores the voltage. When the busbar voltage thereafter at a later stage gets high, T2 could respond with a lower command and thereby again restore the busbar voltage to be within the inner deadband. However, this has now caused the load tap changer for the two transformers to be 2 tap positions apart, which in turn causes an increasing circulating current. This course of events will then repeat with T1 initiating raise commands and T2 initiating lower commands in order to keep the busbar voltage within *USet* ± ΔU, but at the same time it will drive the two tap changers to its opposite end positions. High circulating currents and loss of control would be the result of this runaway tap situation.

Parallel control with the master-follower method

In the master-follower method, one of the transformers is selected to be master, and will regulate the voltage in accordance with the principles for Automatic voltage control. Selection of the master is made by activating the binary input FORCMAST in TR8ATCC function block for one of the transformers in the group.

The followers can act in two alternative ways depending on the setting of the parameter *MFMode*. When this setting is *Follow Cmd*, raise and lower commands (URAISE and ULOWER) generated by the master, will initiate the corresponding command in all follower TR8ATCCs simultaneously, and consequently they will blindly follow the master irrespective of their individual tap positions. Effectively this means that if the tap positions of the followers were harmonized with the master from the beginning, they would stay like that as long as all transformers in the parallel group continue to participate in the parallel control. On the other hand for example, one transformer is disconnected from the group and misses a one tap step operation, and thereafter is reconnected to the group again, it will thereafter participate in the regulation but with a one tap position offset.

If the parameter *MFMode* is set to *Follow Tap*, then the followers will read the tap position of the master and adopt to the same tap position or to a tap position with an offset relative to the master, and given by setting parameter *TapPosOffs* (positive or negative integer value). The setting parameter *tAutoMSF* introduces a time delay on URAISE/ULOWER commands individually for each follower when setting *MFMode* has the value *Follow Tap*.

Selecting a master is made by activating the input FORCMAST in TR8ATCC function block. Deselecting a master is made by activating the input RSTMAST. These two inputs are pulse activated, and the most recent activation is valid that is,

an activation of any of these two inputs overrides previous activations. If none of these inputs has been activated, the default is that the transformer acts as a follower (given of course that the settings are parallel control with the master follower method).

When the selection of master or follower in parallel control, or automatic control in single mode, is made with a three position switch in the substation, an arrangement as in figure 90 below is arranged with ACT tool.

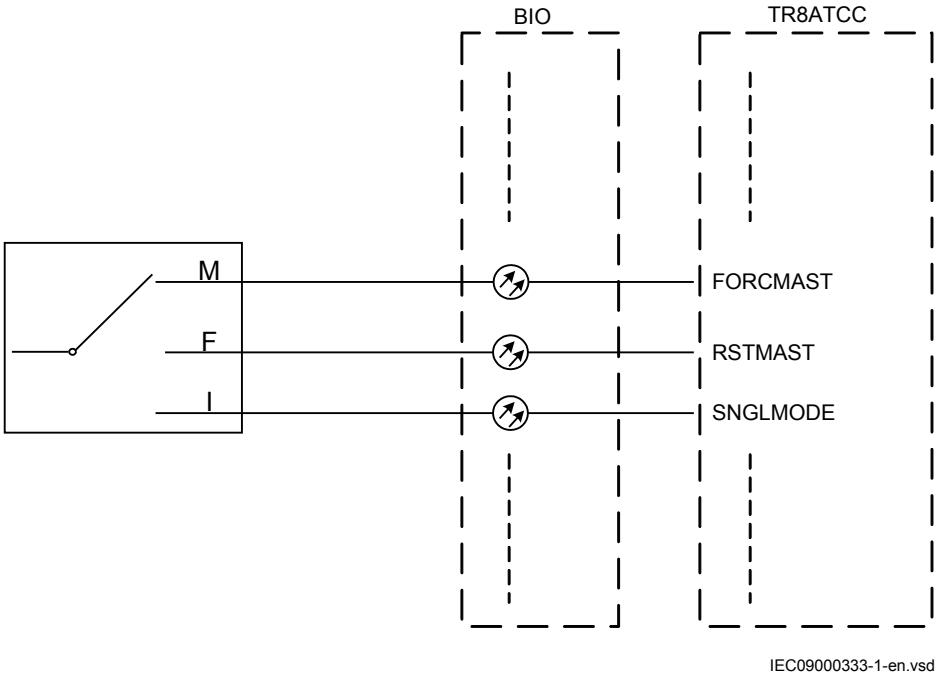

Figure 90: Principle for a three-position switch Master/Follower/Single

Parallel control with the reverse reactance method

Consider figure 91 with two parallel transformers with equal rated data and similar tap changers. The tap positions will diverge and finally end up in a runaway tap situation if no measures to avoid this are taken.

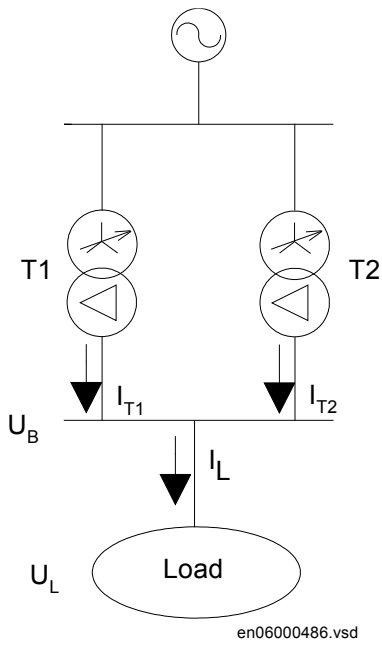

Figure 91: Parallel transformers with equal rated data.

In the reverse reactance method, the line voltage drop compensation is used. The purpose is to control the voltage at a load point further out in the network. The very same function can also be used here but with a completely different objective.

Figure 92, shows a vector diagram where the principle of reverse reactance has been introduced for the transformers in figure 91. The transformers are here supposed to be on the same tap position, and the busbar voltage is supposed to give a calculated compensated value U_L that coincides with the target voltage *USet*.

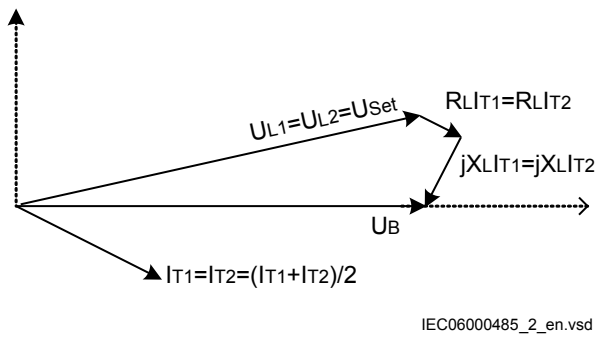

Figure 92: Vector diagram for two transformers regulated exactly on target voltage.

A comparison with figure 89 gives that the line voltage drop compensation for the purpose of reverse reactance control is made with a value with opposite sign on X_L, hence the designation “reverse reactance” or “negative reactance”. Effectively this

means that, whereas the line voltage drop compensation in figure 89 gave a voltage drop along a line from the busbar voltage U_B to a load point voltage U_L, the line voltage drop compensation in figure 92 gives a voltage increase (actually, by adjusting the ratio X_L/R_L with respect to the power factor, the length of the vector U_L will be approximately equal to the length of U_B) from U_B up towards the transformer itself. Thus in principal the difference between the vector diagrams in figure 89 and figure 92 is the sign of the setting parameter X_L.

If now the tap position between the transformers will differ, a circulating current will appear, and the transformer with the highest tap (highest no load voltage) will be the source of this circulating current. Figure 93 below shows this situation with T1 being on a higher tap than T2.

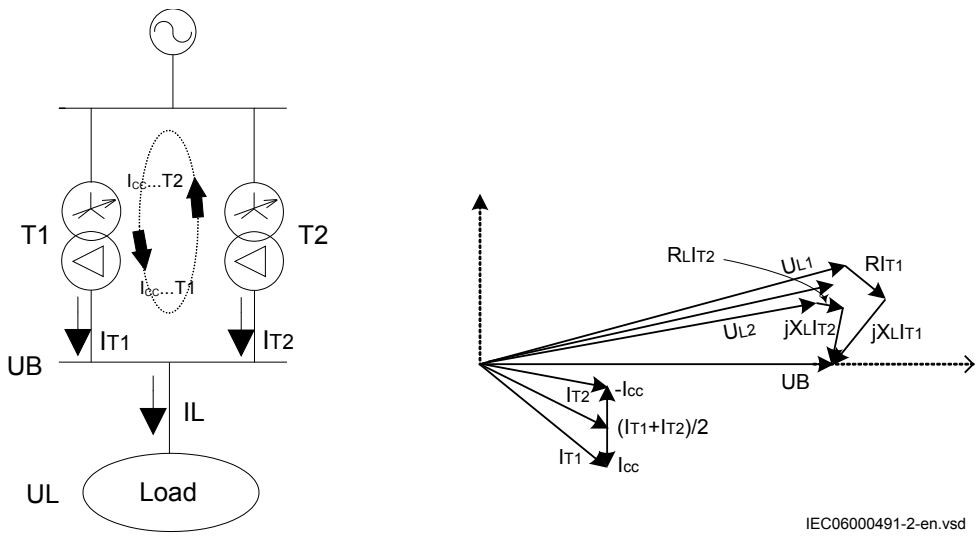

Figure 93: Circulating current caused by T1 on a higher tap than T2.

The circulating current I_{cc} is predominantly reactive due to the reactive nature of the transformers. The impact of I_{cc} on the individual transformer currents is that it increases the current in T1 (the transformer that is driving I_{cc}) and decreases it in T2 at the same time as it introduces contradictive phase shifts, as can be seen in figure 93. The result is thus, that the line voltage drop compensation calculated voltage U_L for T1 will be higher than the line voltage drop compensation calculated voltage U_L for T2, or in other words, the transformer with the higher tap position will have the higher U_L value and the transformer with the lower tap position will have the lower U_L value. Consequently, when the busbar voltage increases, T1 will be the one to tap down, and when the busbar voltage decreases, T2 will be the one to tap up. The overall performance will then be that the runaway tap situation will be avoided and that the circulating current will be minimized.

Parallel control with the circulating current method

Two transformers with different turns ratio, connected to the same busbar on the HV-side, will apparently show different LV-side voltage. If they are now connected to the same LV busbar but remain unloaded, this difference in no-load voltage will cause a circulating current to flow through the transformers. When load is put on the transformers, the circulating current will remain the same, but now it will be superimposed on the load current in each transformer. Voltage control of parallel transformers with the circulating current method means minimizing of the circulating current at a given voltage target value, thereby achieving:

1. that the busbar or load voltage is regulated to a preset target value
2. that the load is shared between parallel transformers in proportion to their ohmic short circuit reactance

If the transformers have equal percentage impedance given in the respective transformer MVA base, the load will be divided in direct proportion to the rated power of the transformers when the circulating current is minimized.

This method requires extensive exchange of data between the TR8ATCC function blocks (one TR8ATCC function for each transformer in the parallel group). TR8ATCC function block can either be located in the same IED, where they are configured in PCM600 to co-operate, or in different IEDs. If the functions are located in different IEDs they must communicate via GOOSE interbay communication on the IEC 61850 communication protocol. .

The busbar voltage U_B is measured individually for each transformer in the parallel group by its associated TR8ATCC function. These measured values will then be exchanged between the transformers, and in each TR8ATCC block, the mean value of all U_B values will be calculated. The resulting value U_{Bmean} will then be used in each IED instead of U_B for the voltage regulation, thus assuring that the same value is used by all TR8ATCC functions, and thereby avoiding that one erroneous measurement in one transformer could upset the voltage regulation. At the same time, supervision of the VT mismatch is also performed. This works such that, if a measured voltage U_B, differs from U_{Bmean} with more than a preset value (setting parameter *VTmismatch*) and for more than a pre set time (setting parameter *tVTmismatch*) an alarm signal VTALARM will be generated.

The calculated mean busbar voltage U_{Bmean} is shown on the local HMI as a service value BusVolt under **Main menu/Tests/Function status/Control/TR8ATCC (90)/1:TR8ATCC/Outputs**.

Measured current values for the individual transformers must be communicated between the participating TR8ATCC functions, in order to calculate the circulating current.

The calculated circulating current I_{cc_i} for transformer “i” is shown on the HMI as a service value ICIRCUL under **Main menu/Control/Commands/TR8ATCC (90)/X:TR8ATCC**.

When the circulating current is known, it is possible to calculate a no-load voltage for each transformer in the parallel group. To do that the magnitude of the circulating current in each bay, is first converted to a voltage deviation, U_{di}, with equation 94:

$$U_{di} = C_i \times I_{cc\_i} \times X_i$$

(Equation 94)

where X_i is the short-circuit reactance for transformer i and C_i, is a setting parameter named *Comp* which serves the purpose of alternatively increasing or decreasing the impact of the circulating current in TR8ATCC control calculations. It should be noted that U_{di} will have positive values for transformers that produce circulating currents and negative values for transformers that receive circulating currents.

Now the magnitude of the no-load voltage for each transformer can be approximated with:

$$U_i = U_{Bmean} + U_{di}$$

(Equation 95)

This value for the no-load voltage is then simply put into the voltage control function for single transformer. There it is treated as the measured busbar voltage, and further control actions are taken as described previously in section "Automatic voltage control for a single transformer". By doing this, the overall control strategy can be summarized as follows.

For the transformer producing/receiving the circulating current, the calculated no-load voltage will be greater/smaller than the measured voltage U_{Bmean}. The calculated no-load voltage will then be compared with the set voltage *USet*. A steady deviation which is outside the outer deadband will result in ULOWER or URAISE being initiated alternatively. In this way the overall control action will always be correct since the position of a tap changer is directly proportional to the transformer no-load voltage. The sequence resets when U_{Bmean} is inside the inner deadband at the same time as the calculated no-load voltages for all transformers in the parallel group are inside the outer deadband.

In parallel operation with the circulating current method, different *USet* values for individual transformers can cause the voltage regulation to be unstable. For this reason, the mean value of *USet* for parallel operating transformers can be automatically calculated and used for the voltage regulation. This is set *On*/*Off* by setting parameter *OperUsetPar*. The calculated mean *USet* value is shown on the local HMI as a service value USETPAR under **Main menu/Control/Commands/ TR8ATCC (90)/X:TR8ATCC**.

The use of mean *USet* is recommended for parallel operation with the circulating current method, especially in cases when Load Voltage Adjustment is also used.

Line voltage drop compensation for parallel control

The line voltage drop compensation for a single transformer is described in section "Line voltage drop". The same principle is used for parallel control with the circulating current method and with the master – follower method, except that the total load current, I_L, is used in the calculation instead of the individual transformer current. (See figure 89 for details). The same values for the parameters *Rline* and *Xline* shall be set in all IEDs in the same parallel group. There is no automatic change of these parameters due to changes in the substation topology, thus they should be changed manually if needed.

Adapt mode, manual control of a parallel group

Adapt mode (operation with the circulating current method)

When the circulating current method is used, it is also possible to manually control the transformers as a group. To achieve this, the setting *OperationAdapt* must be set *On*, then the control mode for one TR8ATCC shall be set to “Manual” via the binary input MANCTRL or the local HMI under **Main menu/Control/Commands/ TR8ATCC (90)/1:TR8ATCC** whereas the other TR8ATCCs are left in “Automatic”. TR8ATCCs in automatic mode will then observe that one transformer in the parallel group is in manual mode and will then automatically be set in adapt mode. As the name indicates they will adapt to the manual tapping of the transformer that has been put in manual mode.

TR8ATCC in adapt mode will continue the calculation of U_{di}, but instead of adding U_{di} to the measured busbar voltage, it will compare it with the deadband ΔU. The following control rules are used:

1. If U_{di} is positive and its modulus is greater thanΔU, then initiate an ULOWER command. Tapping will then take place after appropriate *t1/t2* timing.
2. If U_{di} is negative and its modulus is greater than ΔU, then initiate an URAISE command. Tapping will then take place after appropriate *t1/t2* timing.
3. If U_{di} modulus is smaller thanΔU, then do nothing.

The binary output signal ADAPT on the TR8ATCC function block will be activated to indicate that this TR8ATCC is adapting to another TR8ATCC in the parallel group.

It shall be noted that control with adapt mode works as described under the condition that only one transformer in the parallel group is set to manual mode via the binary input MANCTRL or, the local HMI **Main menu/Control/Commands/ TR8ATCC (90)/1:TR8ATCC**.

In order to operate each tap changer individually when the circulating current method is used, the operator must set each TR8ATCC in the parallel group, in manual.

Adapt mode (operation with the master follower method)

When in master follower mode, the adapt situation occurs when the setting *OperationAdapt* is *On*, and the master is put in manual control with the followers

still in parallel master-follower control. In this situation the followers will continue to follow the master the same way as when it is automatic control.

If one follower in a master follower parallel group is put in manual mode, still with the setting *OperationAdaptOn*, the rest of the group will continue in automatic master follower control. The follower in manual mode will of course disregard any possible tapping of the master. However, as one transformer in the parallel group is now exempted from the parallel control, the binary output signal ADAPT on TR8ATCC function block will be activated for the rest of the parallel group.

Power monitoring

The level (with sign) of active and reactive power flow through the transformer, can be monitored. This function can be utilized for different purposes for example, to block the voltage control function when active power is flowing from the LV side to the HV side or to initiate switching of reactive power compensation plant, and so on.

There are four setting parameters *P*>, *P*<, *Q*> and *Q*< with associated outputs in TR8ATCC function blocks PGTFWD, PLTREV, QGTFWD and QLTREV. When passing the pre-set value, the associated output will be activated after the common time delay setting *tPower*.

The definition of direction of the power is such that the active power P is forward when power flows from the HV-side to the LV-side as shown in figure 94. The reactive power Q is forward when the total load on the LV side is inductive (reactance) as shown in figure 94.

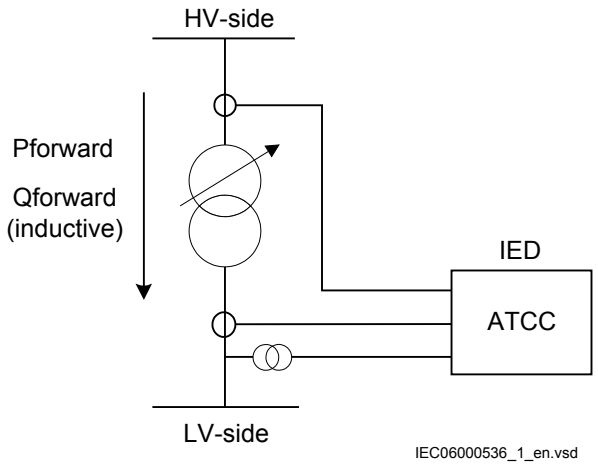

Figure 94: Power direction references

With the four outputs in the function block available, it is possible to do more than just supervise a level of power flow in one direction. By combining the outputs with logical elements in ACT tool, it is also possible to cover for example, intervals as well as areas in the P-Q plane.

Busbar topology logic

Information of the busbar topology that is, position of circuit breakers and isolators, yielding which transformers that are connected to which busbar and which busbars that are connected to each other, is vital for the Automatic voltage control for tap changer, parallel control function TR8ATCC when the circulating current or the master-follower method is used. This information tells each TR8ATCC, which transformers that it has to consider in the parallel control.

In a simple case, when only the switchgear in the transformer bays needs to be considered, there is a built-in function in TR8ATCC block that can provide information on whether a transformer is connected to the parallel group or not. This is made by connecting the transformer CB auxiliary contact status to TR8ATCC function block input DISC, which can be made via a binary input, or via GOOSE from another IED in the substation. When the transformer CB is open, this activates that input which in turn will make a corresponding signal DISC=1 in TR8ATCC data set. This data set is the same data package as the package that contains all TR8ATCC data transmitted to the other transformers in the parallel group (see section "Exchange of information between TR8ATCC functions" for more details). Figure 95 shows an example where T3 is disconnected which will lead to T3 sending the DISC=1 signal to the other two parallel TR8ATCC modules (T1 and T2) in the group. Also see table 22.

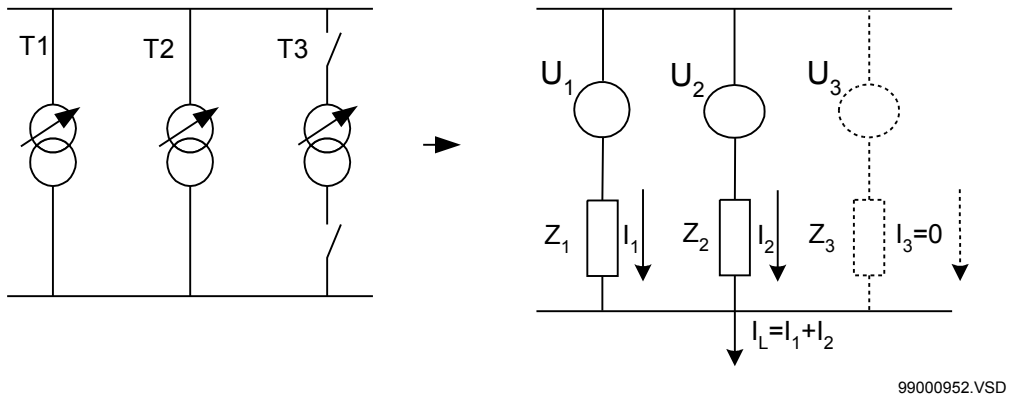

Figure 95: Disconnection of one transformer in a parallel group

When the busbar arrangement is more complicated with more buses and bus couplers/ bus sections, it is necessary to engineer a specific station topology logic. This logic can be built in the ACT tool in PCM600 and will keep record on which transformers that are in parallel (in one or more parallel groups). In each TR8ATCC function block there are four binary inputs (T1INCLD,..., T4INCLD) that will be activated from the logic depending on which transformers that are in parallel with the transformer to whom the TR8ATCC function block belongs.

TR8ATCC function block is also fitted with four outputs (T1PG,..., T4PG) for indication of the actual composition of the parallel group that it itself is part of. If parallel operation mode has been selected in the IED with setting *TrfId* = *Tx*, then the TxPG signal will always be set to 1. The parallel function will consider

communication messages only from the voltage control functions working in parallel (according to the current station configuration). When the parallel voltage control function detects that no other transformers work in parallel it will behave as a single voltage control function in automatic mode.

Exchange of information between TR8ATCC functions

Each transformer in a parallel group needs an Automatic voltage control for tap changer, parallel control TR8ATCC function block of its own for the parallel voltage control. Communication between these TR8ATCCs is made either on the GOOSE interbay communication on the IEC 61850 protocol if TR8ATCC functions reside in different IEDs, or alternatively configured internally in one IED if multiple instances of TR8ATCC reside in the same IED. Complete exchange of TR8ATCC data, analog as well as binary, on GOOSE is made cyclically every 300 ms.

TR8ATCC function block has an output ATCCOUT. This output contains two sets of signals. One is the data set that needs to be transmitted to other TR8ATCC blocks in the same parallel group, and the other is the data set that is transferred to the TCMYLTC function block for the same transformer as TR8ATCC block belongs to.

There are 10 binary signals and 6 analog signals in the data set that is transmitted from one TR8ATCC block to the other TR8ATCC blocks in the same parallel group:

Table 20: Binary signals

Signal	Explanation
TimerOn	This signal is activated by the transformer that has started its timer and is going to tap when the set time has expired.
automaticCTRL	Activated when the transformer is set in automatic control
mutualBlock	Activated when the automatic control is blocked
disc	Activated when the transformer is disconnected from the busbar
receiveStat	Signal used for the horizontal communication
TermIsForcedMaster	Activated when the transformer is selected Master in the master-follower parallel control mode
TermIsMaster	Activated for the transformer that is master in the master-follower parallel control mode
termReadyForMSF	Activated when the transformer is ready for master-follower parallel control mode
raiseVoltageOut	Order from the master to the followers to tap up
lowerVoltageOut	Order from the master to the followers to tap down

Table 21: Analog signals

Signal	Explanation
voltageBusbar	Measured busbar voltage for this transformer
ownLoadCurrim	Measured load current imaginary part for this transformer
ownLoadCurrre	Measured load current real part for this transformer
Table continues on next page	

Signal	Explanation
reacSec	Transformer reactance in primary ohms referred to the LV side
relativePosition	The transformer's actual tap position
voltage Setpoint	The transformer's set voltage (*USet*) for automatic control

Manual configuration of VCTR GOOSE data set is required. Note that both data value attributes and quality attributes have to be mapped. The following data objects must be configured:

- BusV
- LodAIm
- LodARe
- PosRel
- SetV
- VCTRStatus
- X2

The transformers controlled in parallel with the circulating current method or the master-follower method must be assigned unique identities. These identities are entered as a setting in each TR8ATCC, and they are predefined as T1, T2, T3,T4 (transformers 1 to 4). In figure 95 there are three transformers with the parameter *TrfId* set to *T1, T2* and *T3*, respectively.

For parallel control with the circulating current method or the master-follower method alternatively, the same type of data set as described above, must be exchanged between two TR8ATCC. To achieve this, each TR8ATCC is transmitting its own data set on the output ATCCOUT as previously mentioned. To receive data from the other transformers in the parallel group, the output ATCCOUT from each transformer must be connected (via GOOSE or internally in the application configuration) to the inputs HORIZx (x = identifier for the other transformers in the parallel group) on TR8ATCC function block. Apart from this, there is also a setting in each TR8ATCC *T1RXOP=Off/On*,..., *T4RXOP=Off/On*. This setting determines from which of the other transformer individuals that data shall be received. Settings in the three TR8ATCC blocks for the transformers in figure 95, would then be according to the table 22:

Table 22: Setting of TxRXOP

TrfId=T1	*T1RXOP=Off*	*T2RXOP=On*	*T3RXOP=On*	*T4RXOP=Off*
TrfId=T2	*T1RXOP=On*	*T2RXOP=Off*	*T3RXOP=On*	*T4RXOP=Off*
TrfId=T3	*T1RXOP=On*	*T2RXOP=On*	*T3RXOP=Off*	*T4RXOP=Off*

Observe that this parameter must be set to *Off* for the “own” transformer. (for transformer with identity T1 parameter *T1RXOP* must be set to *Off*, and so on.

Blocking

Blocking conditions

The purpose of blocking is to prevent the tap changer from operating under conditions that can damage it, or otherwise when the conditions are such that power system related limits would be exceeded or when, for example the conditions for automatic control are not met.

For the Automatic voltage control for tap changer function, TR8ATCC for parallel control, three types of blocking are used:

Partial Block: Prevents operation of the tap changer only in one direction (only URAISE or ULOWER command is blocked) in manual and automatic control mode.

Auto Block: Prevents automatic voltage regulation, but the tap changer can still be controlled manually.

Total Block: Prevents any tap changer operation independently of the control mode (automatic as well as manual).

Setting parameters for blocking that can be set in TR8ATCC under general settings in local HMI are listed in table 23.

Table 23: Blocking settings

Setting	Values (Range)	Description
OCBk (automatically reset)	Alarm Auto Block Auto&Man Block	When any one of the three HV currents exceeds the preset value *IBlock*, TR8ATCC will be temporarily totally blocked. The outputs IBLK and TOTBLK or AUTOBLK will be activated depending on the actual parameter setting.
OVPartBk (automatically reset)	Alarm Auto&Man Block	If the busbar voltage U_B (not the compensated load point voltage U_L) exceeds *Umax* (see figure 87, further URAISE commands will be blocked if the value Auto&Man Block is selected. If permitted by setting, a fast step down action will be initiated in order to re-enter into the range *Umin* < U_B < *Umax*. The Fast Step down function can be set active for automatic control or automatic as well as manual control and it is blocked when the lowest voltage tap position is reached. The time delay for the fast step down function is separately set. The output UHIGH will be activated as long as the voltage is above *Umax*.
UVPartBk (automatically reset)	Alarm Auto&Man Block	If the busbar voltage U_B (not the calculated load point voltage U_L) is between *Ublock* and *Umin* (see figure 87), further ULOWER commands will be blocked independently of the control mode when the value Auto&Man Block is selected. The output ULOW will be set.
UVBk (automatically reset)	Alarm Auto Block Auto&Man Block	If the busbar voltage U_B falls below *Ublock* this blocking condition is active. It is recommended to block automatic control in this situation and allow manual control. This is because the situation normally would correspond to a disconnected transformer and then it should be allowed to operate the tap changer before reconnecting the transformer. The outputs UBLK and TOTBLK or AUTOBLK will be activated depending on the actual parameter setting.

Table continues on next page

Setting	Values (Range)	Description
CmdErrBk (manually reset)	Alarm Auto Block Auto&Man Block	Typical operating time for a tap changer mechanism is around 3-8 seconds. Therefore, the function should wait for a position change before a new command is issued. The command error signal, CMDERRAL on the TCMYLTC function block, will be set if the tap changer position does not change one step in the correct direction within the time given by the setting *tTCTimeout* in TCMYLTC function block. The tap changer module TCMYLTC will then indicate the error until a successful command has been carried out or it has been reset by changing control mode of TR8ATCC function to Manual and then back to Automatic. The outputs CMDERRAL on TCMYLTC and TOTBLK or AUTOBLK on TR8ATCC will be activated depending on the actual parameter setting. This error condition can be reset by the input RESETERR on TCMYLTC function block, or alternatively by changing control mode of TR8ATCC function to Manual and then back to Automatic.
TapChgBk (manually reset	Alarm Auto Block Auto&Man Block	If the input TCINPROG of TCMYLTC function block is connected to the tap changer mechanism, then this blocking condition will be active if the TCINPROG input has not reset when the *tTCTimeout* timer has timed out. The output TCERRAL will be activated depending on the actual parameter setting. In correct operation the TCINPROG shall appear during the URAISE/ULOWER output pulse and disappear before the *tTCTimeout* time has elapsed. This error condition can be reset by the input RESETERR on TCMYLTC function block, or alternatively by changing control mode of TR8ATCC function to Manual and then back to Automatic.
Table continues on next page		

Setting	Values (Range)	Description
TapPosBk (automatically reset/manually reset)	Alarm Auto Block Auto&Man Block	This blocking/alarm is activated by either: 1. The tap changer reaching an end position i.e. one of the extreme positions according to the setting parameters *LowVoltTap*and *HighVoltTap*. When the tap changer reaches one of these two positions further commands in the corresponding direction will be blocked. Effectively this will then be a partial block if *Auto Block* or *Auto&Man Block*is set. The outputs POSERRAL and LOPOSAL or HIPOSAL will be activated. 2. Tap Position Error which in turn can be caused by one of the following conditions: • Tap position is out of range that is, the indicated position is above or below the end positions. • The tap changer indicates that it has changed more than one position on a single raise or lower command. • The tap position reading shows a BCD code error (unaccepted combination) or a parity fault. • Indication of hardware fault on BIO or AIM module. Supervision of the input hardware module is provided by connecting the corresponding error signal to the INERR input (input module error) or BIERR on TCMYLTC function block. • Interruption of communication with the tap changer. The outputs POSERRAL and AUTOBLK or TOTBLK will be set. This error condition can be reset by the input RESETERR on TCMYLTCfunction block, or alternatively by changing control mode of TR8ATCC function to Manual and then back to Automatic.
CircCurrBk (automatically reset)	Alarm Auto Block Auto&Man Block	When the magnitude of the circulating current exceeds the preset value (setting parameter *CircCurrLimit*) for longer time than the set time delay (setting parameter *tCircCurr*) it will cause this blocking condition to be fulfilled provided that the setting parameter *OperCCBlock* is *On*. The signal resets automatically when the circulating current decreases below the preset value. Usually this can be achieved by manual control of the tap changers. TR8ATCC outputs ICIRC and TOTBLK or AUTOBLK will be activated depending on the actual parameter setting.
MFPosDiffBk (manually reset)	Alarm Auto Block	In the master-follower mode, if the tap difference between a follower and the master is greater than the set value (setting parameter *MFPosDiffLim*) then this blocking condition is fulfilled and the outputs OUTOFPOS and AUTOBLK (alternatively an alarm) will be set.

Setting parameters for blocking that can be set in TR8ATCC under setting group Nx in local HMI are listed in table 24.

Table 24: Blocking settings

Setting	Value (Range)	Description
TotalBlock (manually reset)	*On*/*Off*	TR8ATCC function can be totally blocked via the setting parameter *TotalBlock*, which can be set *On*/*Off* from the local HMI . The output TOTBLK will be activated.
AutoBlock (manually reset)	*On*/*Off*	TR8ATCC function can be blocked for automatic control via the setting parameter *AutoBlock*, which can be set *On*/*Off* from the local HMI . The output AUTOBLK will be set.

TR8ATCC blockings that can be made via input signals in the function block are listed in table 25.

Table 25: Blocking via binary inputs

Input name	Activation	Description
BLOCK (manually reset)	*On*/*Off*(via binary input)	The voltage control function can be totally blocked via the binary input BLOCK on TR8ATCC function block. The output TOTBLK will be activated.
EAUTOBLK (manually reset)	*On*/*Off*(via binary input)	The voltage control function can be blocked for automatic control via the binary input EAUTOBLK on TR8ATCC function block. The output AUTOBLK will be activated. Deblocking is made via the input DEBLKAUT.

Blockings activated by the operating conditions and there are no setting or separate external activation possibilities are listed in table 26.

Table 26: Blockings without setting possibilities

Activation	Type of blocking	Description
Disconnected transformer (automatically reset)	Auto Block	Automatic control is blocked for a transformer when parallel control with the circulating current method is used, and that transformer is disconnected from the LV-busbar. . The binary input signal DISC in TR8ATCC function shall be used to supervise if the transformer LV circuit breaker is closed or not. The outputs TRFDISC and AUTOBLK will be activated . Blocking will be removed when the transformer is reconnected (input signal DISC set back to zero).
No Master/More than one Master (automatically reset)	Auto Block	Automatic control is blocked when parallel control with the master-follower method is used, and the master is disconnected from the LV-busbar. Also if there for some reason should be a situation with more than one master in the system, the same blocking will occur. The binary input signal DISC in TR8ATCC function shall be used to supervise if the transformer LV circuit breaker is closed or not. The outputs TRFDISC, MFERR and AUTOBLK will be activated. The followers will also be blocked by mutual blocking in this situation. Blocking will be removed when the transformer is reconnected (input signal DISC set back to zero).
One transformer in a parallel group switched to manual control (automatically reset)	Auto Block	When the setting *OperationAdapt* is "*Off*", automatic control will be blocked when parallel control with the master-follower or the circulating current method is used, and one of the transformers in the group is switched from auto to manual. The output AUTOBLK will be activated.
Communication error (COMMERR) (automatic deblocking)	Auto block	If the horizontal communication (GOOSE) for any one of TR8ATCCs in the group fails it will cause blocking of automatic control in all TR8ATCC functions, which belong to that parallel group. This error condition will be reset automatically when the communication is re-established. The outputs COMMERR and AUTOBLK will be set.

Circulating current method

Mutual blocking

When one parallel instance of voltage control TR8ATCC blocks its operation, all other TR8ATCCs working in parallel with that module, shall block their operation as well. To achieve this, the affected TR8ATCC function broadcasts a mutual block to the other group members. When mutual block is received from any of the group members, automatic operation is blocked in the receiving TR8ATCCs that is, all units of the parallel group.

The following conditions in any one of TR8ATCCs in the group will cause mutual blocking when the circulating current method is used:

- Over-Current
- Total block via settings
- Total block via configuration
- Analog input error
- Automatic block via settings

- Automatic block via configuration
- Under-Voltage
- Command error
- Position indication error
- Tap changer error
- Circulating current
- Communication error

Master-follower method

When the master is blocked, the followers will not tap by themselves and there is consequently no need for further mutual blocking. On the other hand, when a follower is blocked there is a need to send a mutual blocking signal to the master. This will prevent a situation where the rest of the group otherwise would be able to tap away from the blocked individual, and that way cause high circulating currents.

Thus, when a follower is blocked, it broadcasts a mutual block on the horizontal communication. The master picks up this message, and blocks its automatic operation as well.

Besides the conditions listed above for mutual blocking with the circulating current method, the following blocking conditions in any of the followers will also cause mutual blocking:

- Master-follower out of position
- Master-follower error (No master/More than one master)

General

It should be noted that partial blocking will not cause mutual blocking.

TR8ATCC, which is the “source” of the mutual blocking will set its AUTOBLK output as well as the output which corresponds to the actual blocking condition for example, IBLK for over-current blocking. The other TR8ATCCs that receive a mutual block signal will only set its AUTOBLK output.

The mutual blocking remains until TR8ATCC that dispatched the mutual block signal is de-blocked. Another way to release the mutual blocking is to force TR8ATCC, which caused mutual blocking to Single mode operation. This is done by activating the binary input SNGLMODE on TR8ATCC function block or by setting the parameter *OperationPAR* to *Off* from the built-in local HMI .

TR8ATCC function can be forced to single mode at any time. It will then behave exactly the same way as described in section "Automatic voltage control for a single transformer", except that horizontal communication messages are still sent and received, but the received messages are ignored. TR8ATCC is at the same time also automatically excluded from the parallel group.

Disabling of blockings in special situations

When the Automatic voltage control for tap changer TR8ATCC for parallel control, function block is connected to read back information (tap position value and tap changer in progress signal) it may sometimes be difficult to find timing data to be set in TR8ATCC for proper operation. Especially at commissioning of for example, older transformers the sensors can be worn and the contacts maybe bouncing etc. Before the right timing data is set it may then happen that TR8ATCC becomes totally blocked or blocked in auto mode because of incorrect settings. In this situation, it is recommended to temporarily set these types of blockings to alarm instead until the commissioning of all main items are working as expected.

Hunting detection

Hunting detection is provided in order to generate an alarm when the voltage control gives an abnormal number of commands or abnormal sequence of commands within a pre-defined period of time.

There are three hunting functions:

1. The Automatic voltage control for tap changer function, TR8ATCC for parallel control will activate the output signal DAYHUNT when the number of tap changer operations exceed the number given by the setting *DayHuntDetect* during the last 24 hours (sliding window). Active as well in manual as in automatic mode.
2. TR8ATCC function will activate the output signal HOURHUNT when the number of tap changer operations exceed the number given by the setting *HourHuntDetect* during the last hour (sliding window). Active as well in manual as in automatic mode.
3. TR8ATCC function will activate the output signal HUNTING when the total number of contradictory tap changer operations (RAISE, LOWER, RAISE, LOWER, and so on) exceeds the pre-set value given by the setting *NoOpWindow* within the time sliding window specified via the setting parameter *tWindowHunt*. Only active in automatic mode.

Hunting can be the result of a narrow deadband setting or some other abnormalities in the control system.

Wearing of the tap changer contacts

Two counters, ContactLife and NoOfOperations are available within the Tap changer control and supervision function, 6 binary inputs TCMYLTC. They can be used as a guide for maintenance of the tap changer mechanism. The ContactLife counter represents the remaining number of operations (decremental counter) at rated load.

$$\mathrm{ContactLife}_{n+1} = \mathrm{ContactLife}_{n} - \left(\frac{I_{load}}{I_{rated}}\right)^{\alpha}$$

(Equation 96)

where n is the number of operations and α is an adjustable setting parameter, *CLFactor*, with default value is set to 2. With this default setting an operation at rated load (current measured on HV-side) decrements the ContactLife counter with 1.

The NoOfOperations counter simply counts the total number of operations (incremental counter).

Both counters are stored in a non-volatile memory as well as, the times and dates of their last reset. These dates are stored automatically when the command to reset the counter is issued. It is therefore necessary to check that the IED internal time is correct before these counters are reset. The counter value can be reset on the local HMI under **Main menu/Clear/Clear counters/TCMLYTC (84)/n:TCMYLTC/ ContLifeCounter**

Both counters and their last reset dates are shown on the local HMI as service values CLCNT_VAL and CNT_VAL under **Main menu/Tests/Function status/ Control/TCMYLTC (84)/n:TCMYLTC/Outputs/CLCNT_VAL** and **Main menu/Tests/Function status/Control/TCMYLTC (84)/n:TCMYLTC/Outputs/ CNT_VAL**

11.2.3 Setting guidelines

11.2.3.1 TR8ATCC general settings

Base IED values for primary current (setting *IBase*), primary voltage (setting *UBase*) and primary power (setting *SBase*) for a particular winding are set in a Global base values for settings function GBASVAL. Settings *GlobalBaseSel1* and *GlobalBaseSel2* are used to select the corresponding GBASVAL function for reference of base values.

TrfId: The transformer identity is used to identify transformer individuals in a parallel group. Thus, transformers that can be part of the same parallel group must have unique identities. Moreover, all transformers that communicate over the same horizontal communication (GOOSE) must have unique identities.

Xr2: The reactance of the transformer in primary ohms referred to the LV side.

tAutoMSF: Time delay set in a follower for execution of a raise or lower command given from a master. This feature can be used when a parallel group is controlled in the master-follower mode, follow tap, and it is individually set for each follower, which means that different time delays can be used in the different followers in order to avoid simultaneous tapping if this is wanted. It shall be observed that it is not applicable in the follow command mode.

OperationAdapt: This setting enables or disables adapt mode for parallel control with the circulating current method or the master-follower method.

MFMode: Selection of Follow Command or Follow Tap in the master-follower mode.

CircCurrBk: Selection of action to be taken in case the circulating current exceeds CircCurrLimit.

CmdErrBk: Selection of action to be taken in case the feedback from the tap changer has resulted in command error.

OCBk: Selection of action to be taken in case any of the three phase currents on the HV-side has exceeded *Iblock*.

MFPosDiffBk: Selection of action to be taken in case the tap difference between a follower and the master is greater than *MFPosDiffLim*.

OVPartBk: Selection of action to be taken in case the busbar voltage U_B exceeds *Umax*.

TapChgBk: Selection of action to be taken in case a Tap Changer Error has been identified.

TapPosBk: Selection of action to be taken in case of Tap Position Error, or if the tap changer has reached an end position.

UVBk: Selection of action to be taken in case the busbar voltage U_B falls below *Ublock*.

UVPartBk: Selection of action to be taken in case the busbar voltage U_B is between *Ublock* and *Umin*.

11.2.3.2 TR8ATCC Setting group

General

Operation: Switching automatic voltage control for tap changer, TR8ATCC function *On*/*Off*.

MeasMode: Selection of single phase, or phase-phase, or positive sequence quantity to be used for voltage and current measurement on the LV-side. The involved phases are also selected. Thus, single phase as well as phase-phase or three-phase feeding on the LV-side is possible but it is commonly selected for current and voltage.

TotalBlock: When this setting is *On*, TR8ATCC function that is, the voltage control is totally blocked for manual as well as automatic control.

AutoBlock: When this setting is *On*, TR8ATCC function that is, the voltage control is blocked for automatic control.

Operation

FSDMode: This setting enables/disables the fast step down function. Enabling can be for automatic and manual control, or for only automatic control alternatively.

tFSD: Time delay to be used for the fast step down tapping.

Voltage

USet: Setting value for the target voltage, to be set in per cent of *UBase*.

UDeadband: Setting value for one half of the outer deadband, to be set in per cent of *UBase*. The deadband is symmetrical around *USet*, see section "Automatic voltage control for a single transformer", figure 87. In that figure *UDeadband* is equal to ΔU. The setting is normally selected to a value near the power transformer's tap changer voltage step (typically 75 - 125% of the tap changer step).

UDeadbandInner: Setting value for one half of the inner deadband, to be set in per cent of *UBase*. The inner deadband is symmetrical around *USet*, see section "Automatic voltage control for a single transformer",figure 87. In that figure *UDeadbandInner* is equal to ΔU_{in}. The setting shall be smaller than *UDeadband*. Typically the inner deadband can be set to 25-70% of the *UDeadband* value.

Umax: This setting gives the upper limit of permitted busbar voltage (see section "Automatic voltage control for a single transformer", figure 87). It is set in per cent of *UBase*. If *OVPartBk* is set to *Auto&ManBlock*, then busbar voltages above *Umax* will result in a partial blocking such that only lower commands are permitted.

Umin This setting gives the lower limit of permitted busbar voltage (see section "Automatic voltage control for a single transformer", figure 87). It is set in per cent of *UBase*. If *UVPartBk* is set to *Auto&ManBlock*, then busbar voltages below *Umin* will result in a partial blocking such that only raise commands are permitted.

Ublock: Voltages below *Ublock* normally correspond to a disconnected transformer and therefore it is recommended to block automatic control for this condition (setting *UVBk*). *Ublock* is set in per cent of *UBase*.

Time

t1Use: Selection of time characteristic (definite or inverse) for *t1*.

t1: Time delay for the initial (first) raise/lower command.

t2Use: Selection of time characteristic (definite or inverse) for *t2*.

t2: Time delay for consecutive raise/lower commands. In the circulating current method, the second, third, etc. commands are all executed with time delay *t2* independently of which transformer in the parallel group that is tapping. In the master-follower method with the follow tap option, the master is executing the second, third, etc. commands with time delay *t2*. The followers on the other hand read the master's tap position, and adapt to that with the additional time delay given by the setting *tAutoMSF* and set individually for each follower.

tMin: The minimum operate time when inverse time characteristic is used (see section "Time characteristic", figure 88).

Line voltage drop compensation (LDC)

OpertionLDC: Sets the line voltage drop compensation function *On*/*Off*.

OperCapaLDC: This setting, if set *On*, will permit the load point voltage to be greater than the busbar voltage when line voltage drop compensation is used. That situation can be caused by a capacitive load. When the line voltage drop compensation function is used for parallel control with the reverse reactance method, then *OperCapaLDC* must always be set *On*.

Rline and *Xline*: For line voltage drop compensation, these settings give the line resistance and reactance from the station busbar to the load point. The settings for *Rline* and *Xline* are given in primary system ohms. If more than one line is connected to the LV busbar, equivalent *Rline* and *Xline* values should be calculated and given as settings.

When the line voltage drop compensation function is used for parallel control with the reverse reactance method, then the compensated voltage which is designated "load point voltage" U_L is effectively an increase in voltage up into the transformer. To achieve this voltage increase, *Xline* must be negative. The sensitivity of the parallel voltage regulation is given by the magnitude of *Rline* and *Xline* settings, with *Rline* being important in order to get a correct control of the busbar voltage. This can be realized in the following way. Figure 89 shows the vector diagram for a transformer controlled in a parallel group with the reverse reactance method and with no circulation (for example, assume two equal transformers on the same tap position). The load current lags the busbar voltage U_B with the power factor φ and the argument of the impedance *Rline* and *Xline* is designated φ1.

Load voltage adjustment (LVA)

LVAConst1: Setting of the first load voltage adjustment value. This adjustment of the target value *USet* is given in percent of *UBase*.

LVAConst2: Setting of the second load voltage adjustment value. This adjustment of the target value *USet* is given in percent of*UBase*.

LVAConst3: Setting of the third load voltage adjustment value. This adjustment of the target value *USet* is given in percent of *UBase*.

LVAConst4: Setting of the fourth load voltage adjustment value. This adjustment of the target value *USet* is given in percent of *UBase*.

VRAuto: Setting of the automatic load voltage adjustment. This adjustment of the target value*USet* is given in percent of *UBase*, and it is proportional to the load current with the set value reached at the nominal current *IBase* (for winding 2 which is defined in a global base function, selected with setting *GlobalBaseSel2* forTR8ATCC).

Tap changer control (TCCtrl)

Iblock: Current setting of the over current blocking function. In case, the transformer is carrying a current exceeding the rated current of the tap changer for example, because of an external fault. The tap changer operations shall be

temporarily blocked. This function typically monitors the three phase currents on the HV side of the transformer.

DayHuntDetect: Setting of the number of tap changer operations required during the last 24 hours (sliding window) to activate the signal DAYHUNT

HourHuntDetect: Setting of the number of tap changer operations required during the last hour (sliding window) to activate the signal HOURHUNT

tWindowHunt: Setting of the time window for the window hunting function. This function is activated when the number of contradictory commands to the tap changer exceeds the specified number given by *NoOpWindow* within the time *tWindowHunt*.

NoOpWindow: Setting of the number of contradictory tap changer operations (RAISE, LOWER, RAISE, LOWER etc.) required during the time window *tWindowHunt* to activate the signal HUNTING.

Power

P>: When the active power exceeds the value given by this setting, the output PGTFWD will be activated after the time delay *tPower*. It shall be noticed that the setting is given with sign, which effectively means that a negative value of *P*> means an active power greater than a value in the reverse direction. This is shown in figure 96 where a negative value of *P*> means pickup for all values to the right of the setting. Reference is made to figure 94 for definition of forward and reverse direction of power through the transformer.

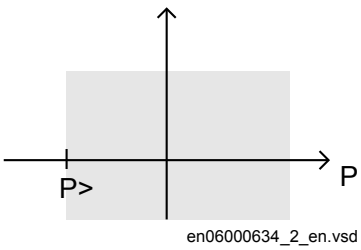

Figure 96: Setting of a negative value for P>

P<: When the active power falls below the value given by this setting, the output PLTREV will be activated after the time delay *tPower*. It shall be noticed that the setting is given with sign, which effectively means that, for example a positive value of *P*< means an active power less than a value in the forward direction. This is shown in figure 97 where a positive value of *P*< means pickup for all values to the left of the setting. Reference is made to figure 94 for definition of forward and reverse direction of power through the transformer.

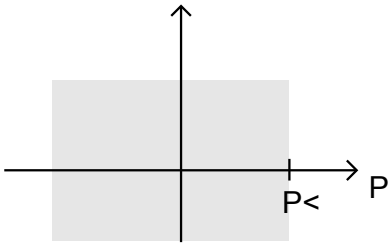

en06000635_2_en.vsd

Figure 97: Setting of a positive value for P<

Q>: When the reactive power exceeds the value given by this setting, the output QGTFWD will be activated after the time delay *tPower*. It shall be noticed that the setting is given with sign, which effectively means that the function picks up for all values of reactive power greater than the set value, similar to the functionality for *P*>.

Q<: When the reactive power in reverse direction falls below the value given by this setting, the output QLTREV will be activated after the time delay *tPower*. It shall be noticed that the setting is given with sign, which effectively means that the function picks up for all values of reactive power less than the set value, similar to the functionality for *P*<.

tPower: Time delay for activation of the power monitoring output signals (PGTFWD, PLTREV, QGTFWD and QLTREV).

Parallel control (ParCtrl)

OperationPAR: Setting of the method for parallel operation.

OperCCBlock: This setting enables/disables blocking if the circulating current exceeds *CircCurrLimit*.

CircCurrLimit: Pick up value for the circulating current blocking function. The setting is made in percent of *IBase* (for winding 2 which is defined in a global base function, selected with setting *GlobalBaseSel2* for TR8ATCC).

tCircCurr: Time delay for the circulating current blocking function.

Comp: When parallel operation with the circulating current method is used, this setting increases or decreases the influence of the circulating current on the regulation.

If the transformers are connected to the same bus on the HV- as well as the LV-side, *Comp* can be calculated with the following formula which is valid for any number of two-winding transformers in parallel, irrespective if the transformers are of different size and short circuit impedance.

$$\mathrm{Comp} = a \times \frac{2 \times \Delta U}{n \times p} \times 100\%$$

(Equation 97)

where:

- ΔU is the deadband setting in percent.
- *n* denotes the desired number of difference in tap position between the transformers, that shall give a voltage deviation U_{di} which corresponds to the dead-band setting.
- *p* is the tap step (in % of transformer nominal voltage).
- *a* is a safety margin that shall cover component tolerances and other non-linear measurements at different tap positions (for example, transformer reactances changes from rated value at the ends of the regulation range). In most cases a value of a = 1.25 serves well.

This calculation gives a setting of *Comp* that will always initiate an action (start timer) when the transformers have n tap positions difference.

OperSimTap: Enabling/disabling the functionality to allow only one transformer at a time to execute a Lower/Raise command. This setting is applicable only to the circulating current method, and when enabled, consecutive tap changes of the next transformer (if required) will be separated with the time delay *t2*.

OperUsetPar: Enables/disables the use of a common setting for the target voltage *USet*. This setting is applicable only to the circulating current method, and when enabled, a mean value of the *USet* values for the transformers in the same parallel group will be calculated and used.

VTmismatch: Setting of the level for activation of the output VTALARM in case the voltage measurement in one transformer bay deviates to the mean value of all voltage measurements in the parallel group.

tVTmismatch: Time delay for activation of the output VTALARM.

T1RXOP.....*T4RXOP*: This setting is set *On* for every transformer that can participate in a parallel group with the transformer in case. For this transformer (own transformer), the setting must always be *Off*.

TapPosOffs: This setting gives the tap position offset in relation to the master so that the follower can follow the master's tap position including this offset. Applicable when regulating in the follow tap command mode.

MFPosDiffLim: When the difference (including a possible offset according to *TapPosOffs*) between a follower and the master reaches the value in this setting, then the output OUTOFPOS in the Automatic voltage control for tap changer, parallel control TR8ATCC function block of the follower will be activated after the time delay *tMFPosDiff*.

tMFPosDiff: Time delay for activation of the output OUTOFPOS.

Transformer name

INSTNAME: This setting can be used for indicating in tools and the local HMI to which transformer a certain instance of the function belongs.

11.2.3.3 TCMYLTC general settings

Base IED values for primary current (setting *IBase*), primary voltage (setting *UBase*) and primary power (setting *SBase*) for a particular winding are set in a Global base values for settings function GBASVAL. Settings *GlobalBaseSel1* and *GlobalBaseSel2* are used to select the corresponding GBASVAL function for reference of base values.

LowVoltTap: This gives the tap position for the lowest LV-voltage.

HighVoltTap: This gives the tap position for the highest LV-voltage.

CodeType: This setting gives the method of tap position reading.

UseParity: Sets the parity check *On*/*Off* for tap position reading when this is made by Binary, BCD, or Gray code.

tStable: This is the time that needs to elapse after a new tap position has been reported to TCMYLTC until it is accepted.

CLFactor: This is the factor designated “a” in equation 97. When a tap changer operates at nominal load current(current measured on the HV-side), the ContactLife counter decrements with 1, irrespective of the setting of *CLFactor*. The setting of this factor gives the weighting of the deviation with respect to the load current.

InitCLCounter: The ContactLife counter monitors the remaining number of operations (decremental counter). The setting *InitCLCounter* then gives the start value for the counter that is, the total number of operations at rated load that the tap changer is designed for.

EnabTapCmd: This setting enables/disables the lower and raise commands to the tap changer. It shall be *On* for voltage control, and *Off* for tap position feedback to the transformer differential protection T2WPDIF or T3WPDIF.

TCMYLTC Setting group

General

Operation: Switching the TCMYLTC function *On*/*Off*.

tTCTimeout: This setting gives the maximum time interval for a raise or lower command to be completed.

tPulseDur: Length of the command pulse (URAISE/ULOWER) to the tap changer. It shall be noticed that this pulse has a fixed extension of 4 seconds that adds to the setting value of *tPulseDur*.

11.3 Logic rotating switch for function selection and LHMI presentation SLGGIO

11.3.1 Identification

Function description	IEC 61850 identification	IEC 60617 identification	ANSI/IEEE C37.2 device number
Logic rotating switch for function selection and LHMI presentation	SLGGIO	-	-

11.3.2 Application

The logic rotating switch for function selection and LHMI presentation function (SLGGIO) (or the selector switch function block, as it is also known) is used to get a selector switch functionality similar with the one provided by a hardware multi-position selector switch. Hardware selector switches are used extensively by utilities, in order to have different functions operating on pre-set values. Hardware switches are however sources for maintenance issues, lower system reliability and extended purchase portfolio. The virtual selector switches eliminate all these problems.

SLGGIO function block has two operating inputs (UP and DOWN), one blocking input (BLOCK) and one operator position input (PSTO).

SLGGIO can be activated both from the local HMI and from external sources (switches), via the IED binary inputs. It also allows the operation from remote (like the station computer). SWPOSN is an integer value output, giving the actual output number. Since the number of positions of the switch can be established by settings (see below), one must be careful in coordinating the settings with the configuration (if one sets the number of positions to x in settings – for example, there will be only the first x outputs available from the block in the configuration). Also the frequency of the (UP or DOWN) pulses should be lower than the setting *tPulse*.

The operation from local HMI is from select or indication buttons (32 positions). Typical applications are: Select operating modes for e.g. Auto reclose, Energizing check, Earth-fault protection (IN,UN). The output integer can be connected to an Integer to Binary function block to give the position as a boolean for use in the configuration.

11.3.3 Setting guidelines

The following settings are available for the Logic rotating switch for function selection and LHMI presentation (SLGGIO) function:

Operation: Sets the operation of the function *On* or *Off*.

NrPos: Sets the number of positions in the switch (max. 32). This setting influence the behavior of the switch when changes from the last to the first position.

OutType: *Steady* or *Pulsed*.

tPulse: In case of a pulsed output, it gives the length of the pulse (in seconds).

tDelay: The delay between the UP or DOWN activation signal positive front and the output activation.

StopAtExtremes: Sets the behavior of the switch at the end positions – if set to *Disabled*, when pressing UP while on first position, the switch will jump to the last position; when pressing DOWN at the last position, the switch will jump to the first position; when set to *Enabled*, no jump will be allowed.

11.4 Selector mini switch VSGGIO

11.4.1 Identification

Function description	IEC 61850 identification	IEC 60617 identification	ANSI/IEEE C37.2 device number
Selector mini switch	VSGGIO	-	-

11.4.2 Application

Selector mini switch (VSGGIO) function is a multipurpose function used in the configuration tool in PCM600 for a variety of applications, as a general purpose switch. VSGGIO can be used for both acquiring an external switch position (through the IPOS1 and the IPOS2 inputs) and represent it through the single line diagram symbols (or use it in the configuration through the outputs POS1 and POS2) as well as, a command function (controlled by the PSTO input), giving switching commands through the CMDPOS12 and CMDPOS21 outputs.

The output POSITION is an integer output, showing the actual position as an integer number 0 – 3.

An example where VSGGIO is configured to switch Autorecloser on–off from a button symbol on the local HMI is shown in Figure 11. The I and O buttons on the local HMI are normally used for on–off operations of the circuit breaker.

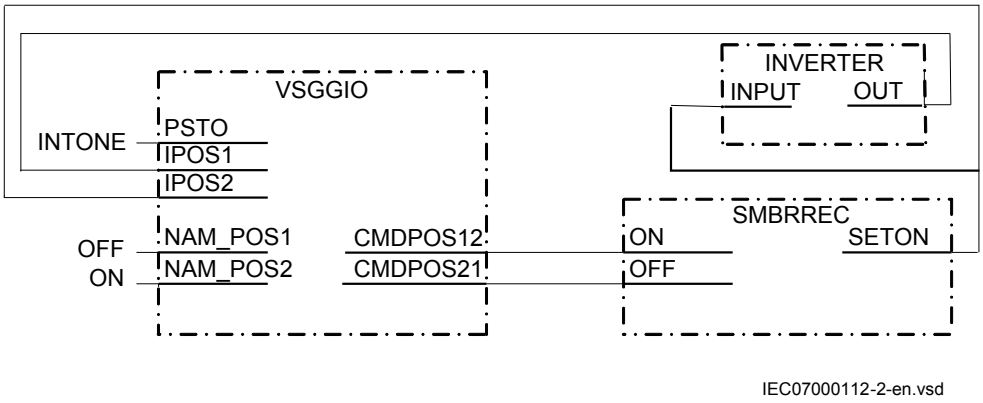

Figure 98: Control of Autorecloser from local HMI through Selector mini switch

11.4.3 Setting guidelines

Selector mini switch (VSGGIO) function can generate pulsed or steady commands (by setting the *Mode* parameter). When pulsed commands are generated, the length of the pulse can be set using the *tPulse* parameter. Also, being accessible on the single line diagram (SLD), this function block has two control modes (settable through *CtlModel*): *Dir Norm* and *SBO Enh*.

11.5 IEC61850 generic communication I/O functions DPGGIO

11.5.1 Identification

Function description	IEC 61850 identification	IEC 60617 identification	ANSI/IEEE C37.2 device number
IEC 61850 generic communication I/O functions	DPGGIO	-	-

11.5.2 Application

The IEC61850 generic communication I/O functions (DPGGIO) function block is used to send three logical outputs to other systems or equipment in the substation. The three inputs are named OPEN, CLOSE and VALID, since this function block is intended to be used as a position indicator block in interlocking and reservation station-wide logics.

11.5.3 Setting guidelines

The function does not have any parameters available in the local HMI or PCM600.

11.6 Single point generic control 8 signals SPC8GGIO

11.6.1 Identification

Function description	IEC 61850 identification	IEC 60617 identification	ANSI/IEEE C37.2 device number
Single point generic control 8 signals	SPC8GGIO	-	-

11.6.2 Application

The Single point generic control 8 signals (SPC8GGIO) function block is a collection of 8 single point commands, designed to bring in commands from REMOTE (SCADA) to those parts of the logic configuration that do not need complicated function blocks that have the capability to receive commands (for example SCSWI). In this way, simple commands can be sent directly to the IED outputs, without confirmation. Confirmation (status) of the result of the commands is supposed to be achieved by other means, such as binary inputs and SPGGIO function blocks.

PSTO is the universal operator place selector for all control functions. Even if PSTO can be configured to allow LOCAL or ALL operator positions, the only functional position usable with the SPC8GGIO function block is REMOTE.

11.6.3 Setting guidelines

The parameters for the single point generic control 8 signals (SPC8GGIO) function are set via the local HMI or PCM600.

Operation: turning the function operation *On*/*Off*.

There are two settings for every command output (totally 8):

Latchedx: decides if the command signal for output *x* is *Latched* (steady) or *Pulsed*.

tPulsex: if *Latchedx* is set to *Pulsed*, then *tPulsex* will set the length of the pulse (in seconds).

11.7 Automation bits AUTOBITS

11.7.1 Identification

Function description	IEC 61850 identification	IEC 60617 identification	ANSI/IEEE C37.2 device number
AutomationBits, command function for DNP3	AUTOBITS	-	-

11.7.2 Application

The AUTOBITS function block (or the automation bits function block) is used within PCM600 in order to get into the configuration the commands coming through the DNP3 protocol.AUTOBITS function block have 32 individual outputs which each can be mapped as a Binary Output point in DNP3. The output is operated by a "Object 12" in DNP3. This object contains parameters for control-code, count, on-time and off-time. To operate an AUTOBITS output point, send a control-code of latch-On, latch-Off, pulse-On, pulse-Off, Trip or Close. The remaining parameters are regarded as appropriate. For example, pulse-On, on-time=100, off-time=300, count=5 would give 5 positive 100 ms pulses, 300 ms apart.

See the communication protocol manual for a detailed description of the DNP3 protocol

11.7.3 Setting guidelines

AUTOBITS function block has one setting, (*Operation*: *On*/*Off*) enabling or disabling the function. These names will be seen in the DNP communication configuration tool in PCM600.

Section 12 Logic

12.1 Tripping logic common 3-phase output SMPPTRC

12.1.1 Identification

Function description	IEC 61850 identification	IEC 60617 identification	ANSI/IEEE C37.2 device number
Tripping logic common 3-phase output	SMPPTRC	*I->O*	94

12.1.2 Application

All trip signals from the different protection functions shall be routed through the trip logic. In its simplest alternative the logic will only link the internal TRIP signals to a binary output and make sure that the pulse length is long enough.

The tripping logic common 3-phase output (SMPPTRC) offers only three-phase tripping. A three-phase trip for all faults offers a simple solution and is often sufficient in well meshed transmission systems and in High Voltage (HV) systems.

One SMPPTRC function block should be used for each breaker, if the object is connected to the system via more than one breaker.

To prevent closing of a circuit breaker after a trip the function can block the closing of the circuit breaker (trip lock-out).

12.1.2.1 Three-phase tripping

A simple application with three-phase tripping from the tripping logic common 3-phase output SMPPTRC utilizes part of the function block. Connect the inputs from the protection function blocks to the input TRIN. If necessary (normally the case) use the trip matrix logic TMAGGIO to combine the different function outputs to this input. Connect the output TRIP to the required binary outputs.

A typical connection is shown below in figure 99.

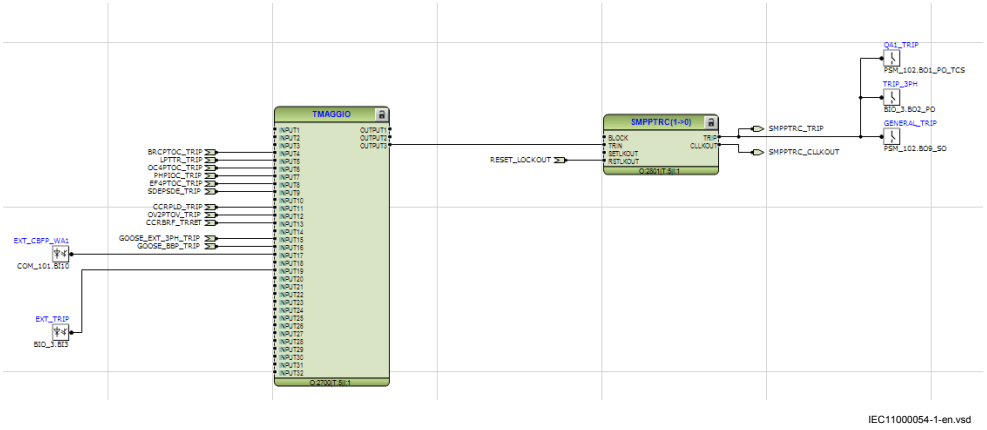

Figure 99: Tripping logic common 3-phase output SMPPTRC is used for a simple three-phase tripping application

12.1.2.2 Lock-out

This function block is provided with possibilities to initiate lock-out. The lock-out can be set to only activate the block closing output CLLKOUT or initiate the block closing output and also maintain the trip signal (latched trip).

The lock-out can then be manually reset after checking the primary fault by activating the input reset Lock-Out RSTLKOUT or via the HMI.

If external conditions are required to initiate Lock-out but not initiate trip this can be achieved by activating input SETLKOUT. The setting *AutoLock* = *Off* means that the internal trip will not activate lock-out so only initiation of the input SETLKOUT will result in lock-out. This is normally the case for overhead line protection where most faults are transient. Unsuccessful autoreclose and back-up zone tripping can in such cases be connected to initiate Lock-out by activating the input SETLKOUT.

12.1.2.3 Blocking of the function block

Blocking can be initiated internally by logic, or by the operator using a communication channel. Total blockage of Tripping logic (SMPPTRC) function is done by activating the input BLOCK and can be used to block the output of SMPPTRC in the event of internal failures.

12.1.3 Setting guidelines

The parameters for Tripping logic common 3-phase output SMPPTRC are set via the local HMI or through the Protection and Control Manager (PCM600).

The following trip parameters can be set to regulate tripping.

Operation: Sets the mode of operation. *Off* switches the function off. The normal selection is *On*.

TripLockout: Sets the scheme for lock-out. *Off* only activates the lock-out output. *On* activates the lock-out output and latches the output `TRIP`. The normal selection is *Off*.

AutoLock: Sets the scheme for lock-out. *Off* only activates lock-out through the input SETLKOUT. *On* additonally allows activation through the trip function itself. The normal selection is *Off*.

tTripMin: Sets the required minimum duration of the trip pulse. It should be set to ensure that the breaker is tripped correctly. Normal setting is *0.150s*.

12.2 Trip matrix logic TMAGGIO

12.2.1 Identification

Function description	IEC 61850 identification	IEC 60617 identification	ANSI/IEEE C37.2 device number
Trip matrix logic	TMAGGIO	-	-

12.2.2 Application

The Trip matrix logic TMAGGIO function is used to route trip signals and other logical output signals to the tripping logics SMPPTRC and SPTPTRC or to different output contacts on the IED.

TMAGGIO output signals and the physical outputs allows the user to adapt the signals to the physical tripping outputs according to the specific application needs.

12.2.3 Setting guidelines

Operation: Turns the operation of the function *On*/*Off*.

PulseTime: Defines the pulse time duration. When used for direct tripping of circuit breaker(s) the pulse time duration shall be set to approximately 0.150 seconds in order to obtain satisfactory minimum duration of the trip pulse to the circuit breaker trip coils. Used only for *ModeOutputx*: *Pulsed*.

OnDelay: Used to prevent output signals to be given for spurious inputs. Normally set to 0 or a low value. Used only for *ModeOutputx*: *Steady*.

OffDelay: Defines a minimum on time for the outputs. When used for direct tripping of circuit breaker(s) the off delay time shall be set to approximately 0.150 seconds in order to obtain a satisfactory minimum duration of the trip pulse to the circuit breaker trip coils. Used only for *ModeOutputx*: *Steady*.

ModeOutputx: Defines if output signal `OUTPUTx` (where x=1-3) is *Steady* or *Pulsed*. A steady signal follows the status of the input signals, with respect to *OnDelay* and *OffDelay*. A pulsed signal will give a pulse once, when the `Outputx` rises from 0 to 1.

12.3 Configurable logic blocks

12.3.1 Identification

Function description	IEC 61850 identification	IEC 60617 identification	ANSI/IEEE C37.2 device number
OR Function block	OR	-	-

Function description	IEC 61850 identification	IEC 60617 identification	ANSI/IEEE C37.2 device number
Inverter function block	INVERTER	-	-

Function description	IEC 61850 identification	IEC 60617 identification	ANSI/IEEE C37.2 device number
PULSETIMER function block	PULSETIMER	-	-

Function description	IEC 61850 identification	IEC 60617 identification	ANSI/IEEE C37.2 device number
Controllable gate function block	GATE	-	-

Function description	IEC 61850 identification	IEC 60617 identification	ANSI/IEEE C37.2 device number
Exclusive OR function block	XOR	-	-

Function description	IEC 61850 identification	IEC 60617 identification	ANSI/IEEE C37.2 device number
Logic loop delay function block	LOOPDELAY	-	-

Function description	IEC 61850 identification	IEC 60617 identification	ANSI/IEEE C37.2 device number
Timer function block	TIMERSET	-	-

Function description	IEC 61850 identification	IEC 60617 identification	ANSI/IEEE C37.2 device number
AND function block	AND	-	-

Function description	IEC 61850 identification	IEC 60617 identification	ANSI/IEEE C37.2 device number
Set-reset memory function block	SRMEMORY	-	-

Function description	IEC 61850 identification	IEC 60617 identification	ANSI/IEEE C37.2 device number
Reset-set with memory function block	RSMEMORY	-	-

12.3.2 Application

A set of standard logic blocks, like AND, OR etc, and timers are available for adapting the IED configuration to the specific application needs.

There are no settings for AND gates, OR gates, inverters or XOR gates.

For normal On/Off delay and pulse timers the time delays and pulse lengths are set from the local HMI or via the PST tool.

Both timers in the same logic block (the one delayed on pick-up and the one delayed on drop-out) always have a common setting value.

For controllable gates, settable timers and SR flip-flops with memory, the setting parameters are accessible via the local HMI or via the PST tool.

12.3.3.1 Configuration

Logic is configured using the ACT configuration tool in PCM600.

Execution of functions as defined by the configurable logic blocks runs according to a fixed sequence with different cycle times.

For each cycle time, the function block is given an serial execution number. This is shown when using the ACT configuration tool with the designation of the function block and the cycle time, see example below.

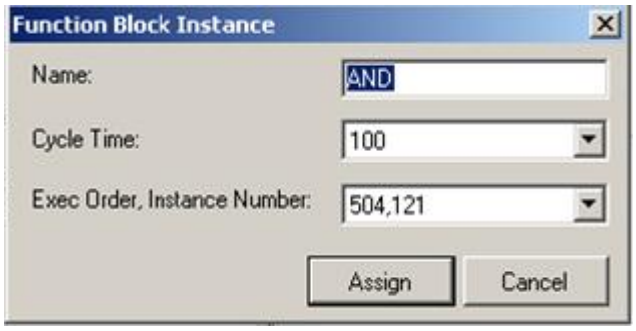

IEC09000695_2_en.vsd

Figure 100: Example designation, serial execution number and cycle time for logic function

The execution of different function blocks within the same cycle is determined by the order of their serial execution numbers. Always remember this when connecting two or more logical function blocks in series.

Always be careful when connecting function blocks with a fast cycle time to function blocks with a slow cycle time.
Remember to design the logic circuits carefully and always check the execution sequence for different functions. In other cases, additional time delays must be introduced into the logic schemes to prevent errors, for example, race between functions.
Default value on all four inputs of the AND gate are logical 1 which makes it possible for the user to just use the required number of inputs and leave the rest un-connected. The output OUT has a default value 0 initially, which will suppress one cycle pulse if the function has been put in the wrong execution order.

12.4 Fixed signals FXDSIGN

12.4.1 Identification

Function description	IEC 61850 identification	IEC 60617 identification	ANSI/IEEE C37.2 device number
Fixed signals	FXDSIGN	-	-

12.4.2 Application

The Fixed signals function (FXDSIGN) generates a number of pre-set (fixed) signals that can be used in the configuration of an IED, either for forcing the unused inputs in other function blocks to a certain level/value, or for creating certain logic.

Example for use of GRP_OFF signal in FXDSIGN

The Restricted earth fault function REFPDIF can be used both for auto-transformers and normal transformers.

When used for auto-transformers, information from both windings parts, together with the neutral point current, needs to be available to the function. This means that three inputs are needed.

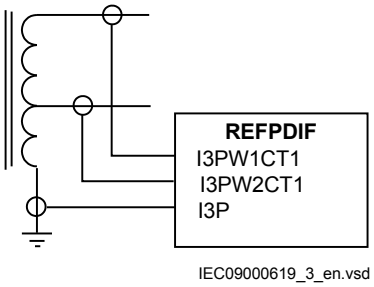

Figure 101: REFPDIF function inputs for autotransformer application

For normal transformers only one winding and the neutral point is available. This means that only two inputs are used. Since all group connections are mandatory to be connected, the third input needs to be connected to something, which is the GRP_OFF signal in FXDSIGN function block.

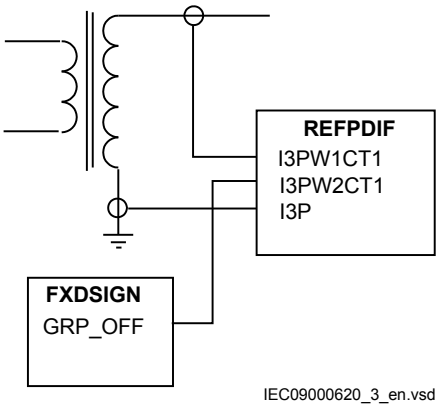

Figure 102: REFPDIF function inputs for normal transformer application

12.5 Boolean 16 to integer conversion B16I

12.5.1 Identification

Function description	IEC 61850 identification	IEC 60617 identification	ANSI/IEEE C37.2 device number
Boolean 16 to integer conversion	B16I	-	-

12.5.2 Application

Boolean 16 to integer conversion function B16I is used to transform a set of 16 binary (logical) signals into an integer. It can be used – for example, to connect logical output signals from a function (like distance protection) to integer inputs

from another function (like line differential protection). B16I does not have a logical node mapping.

12.5.3 Setting guidelines

The function does not have any parameters available in Local HMI or Protection and Control IED Manager (PCM600).

12.6 Boolean 16 to integer conversion with logic node representation B16IFCVI

12.6.1 Identification

Function description	IEC 61850 identification	IEC 60617 identification	ANSI/IEEE C37.2 device number
Boolean 16 to integer conversion with logic node representation	B16IFCVI	-	-

12.6.2 Application

Boolean 16 to integer conversion with logic node representation function B16IFCVI is used to transform a set of 16 binary (logical) signals into an integer. B16IFCVI can receive an integer from a station computer – for example, over IEC 61850–8–1. These functions are very useful when you want to generate logical commands (for selector switches or voltage controllers) by inputting an integer number. B16IFCVI has a logical node mapping in IEC 61850.

12.6.3 Setting guidelines

The function does not have any parameters available in the local HMI or Protection and Control IED Manager (PCM600).

12.7 Integer to boolean 16 conversion IB16A

12.7.1 Identification

Function description	IEC 61850 identification	IEC 60617 identification	ANSI/IEEE C37.2 device number
Integer to boolean 16 conversion	IB16A	-	-

12.7.2 Application

Integer to boolean 16 conversion function (IB16A) is used to transform an integer into a set of 16 binary (logical) signals. It can be used – for example, to connect integer output signals from one function to binary (logical) inputs to another function. IB16A function does not have a logical node mapping.

12.7.3 Setting guidelines

The function does not have any parameters available in the local HMI or Protection and Control IED Manager (PCM600).

12.8 Integer to boolean 16 conversion with logic node representation IB16FCVB

12.8.1 Identification

Function description	IEC 61850 identification	IEC 60617 identification	ANSI/IEEE C37.2 device number
Integer to boolean 16 conversion with logic node representation	IB16FCVB	-	-

12.8.2 Application

Integer to boolean 16 conversion with logic node representation function (IB16FCVB) is used to transform an integer into a set of 16 binary (logical) signals. IB16FCVB function can receive an integer from a station computer – for example, over IEC 61850–8–1. These functions are very useful when the user wants to generate logical commands (for selector switches or voltage controllers) by inputting an integer number. IB16FCVB function has a logical node mapping in IEC 61850.

12.8.3 Settings

The function does not have any parameters available in the local HMI or Protection and Control IED Manager (PCM600)

Section 13 Monitoring

13.1 IEC61850 generic communication I/O functions SPGGIO

13.1.1 Identification

Function description	IEC 61850 identification	IEC 60617 identification	ANSI/IEEE C37.2 device number
IEC 61850 generic communication I/O functions	SPGGIO	-	-

13.1.2 Application

IEC 61850–8–1 generic communication I/O functions (SPGGIO) function is used to send one single logical output to other systems or equipment in the substation. It has one visible input, that should be connected in ACT tool.

13.1.3 Setting guidelines

The function does not have any parameters available in Local HMI or Protection and Control IED Manager (PCM600).

13.2 IEC61850 generic communication I/O functions 16 inputs SP16GGIO

13.2.1 Identification

Function description	IEC 61850 identification	IEC 60617 identification	ANSI/IEEE C37.2 device number
IEC 61850 generic communication I/O functions 16 inputs	SP16GGIO	-	-

13.2.2 Application

SP16GGIO function block is used to send up to 16 logical signals to other systems or equipment in the substation. Inputs should be connected in ACT tool.

13.2.3 Setting guidelines

The function does not have any parameters available in Local HMI or Protection and Control IED Manager (PCM600).

13.3 IEC61850 generic communication I/O functions MVGGIO

13.3.1 Identification

Function description	IEC 61850 identification	IEC 60617 identification	ANSI/IEEE C37.2 device number
IEC61850 generic communication I/O functions	MVGGIO	-	-

13.3.2 Application

IEC61850 generic communication I/O functions (MVGGIO) function is used to send the instantaneous value of an analog signal to other systems or equipment in the substation. It can also be used inside the same IED, to attach a RANGE aspect to an analog value and to permit measurement supervision on that value.

13.3.3 Setting guidelines

The settings available for IEC61850 generic communication I/O functions (MVGGIO) function allows the user to choose a deadband and a zero deadband for the monitored signal. Values within the zero deadband are considered as zero.

The high and low limit settings provides limits for the high-high-, high, normal, low and low-low ranges of the measured value. The actual range of the measured value is shown on the range output of MVGGIO function block. When a Measured value expander block (MVEXP) is connected to the range output, the logical outputs of the MVEXP are changed accordingly.

13.4 Measurements

13.4.1 Identification

Function description	IEC 61850 identification	IEC 60617 identification	ANSI/IEEE C37.2 device number
Measurements	CVMMXN	P, Q, S, I, U, f	-
Phase current measurement	CMMXU	I	-
Phase-phase voltage measurement	VMMXU	U	-
Current sequence component measurement	CMSQI	I1, I2, I0	-
Voltage sequence measurement	VMSQI	U1, U2, U0	-
Phase-neutral voltage measurement	VNMMXU	U	-

13.4.2 Application

Measurement functions is used for power system measurement, supervision and reporting to the local HMI, monitoring tool within PCM600 or to station level for example, via IEC 61850. The possibility to continuously monitor measured values of active power, reactive power, currents, voltages, frequency, power factor etc. is vital for efficient production, transmission and distribution of electrical energy. It provides to the system operator fast and easy overview of the present status of the power system. Additionally, it can be used during testing and commissioning of protection and control IEDs in order to verify proper operation and connection of instrument transformers (CTs and VTs). During normal service by periodic comparison of the measured value from the IED with other independent meters the proper operation of the IED analog measurement chain can be verified. Finally, it

can be used to verify proper direction orientation for distance or directional overcurrent protection function.

The available measured values of an IED are depending on the actual hardware (TRM) and the logic configuration made in PCM600.

All measured values can be supervised with four settable limits that is, low-low limit, low limit, high limit and high-high limit. A zero clamping reduction is also supported, that is, the measured value below a settable limit is forced to zero which reduces the impact of noise in the inputs. There are no interconnections regarding any settings or parameters, neither between functions nor between signals within each function.

Zero clampings are handled by *ZeroDb* for each signal separately for each of the functions. For example, the zero clamping of U12 is handled by *ULZeroDb* in VMMXU, zero clamping of I1 is handled by *ILZeroDb* in CMMXU.

Dead-band supervision can be used to report measured signal value to station level when change in measured value is above set threshold limit or time integral of all changes since the last time value updating exceeds the threshold limit. Measure value can also be based on periodic reporting.

The measurement function, CVMMXN, provides the following power system quantities:

- P, Q and S: three phase active, reactive and apparent power
- PF: power factor
- U: phase-to-phase voltage amplitude
- I: phase current amplitude
- F: power system frequency

The output values are displayed in the local HMI under **Main menu/Tests/ Function status/Monitoring/CVMMXN/Outputs**

The measuring functions CMMXU, VNMMXU and VMMXU provide physical quantities:

- I: phase currents (amplitude and angle) (CMMXU)
- U: voltages (phase-to-earth and phase-to-phase voltage, amplitude and angle) (VMMXU, VNMMXU)

It is possible to calibrate the measuring function above to get better then class 0.5 presentation. This is accomplished by angle and amplitude compensation at 5, 30 and 100% of rated current and at 100% of rated voltage.

The power system quantities provided, depends on the actual hardware, (TRM) and the logic configuration made in PCM600.

The measuring functions CMSQI and VMSQI provide sequence component quantities:

- I: sequence currents (positive, zero, negative sequence, amplitude and angle)
- U: sequence voltages (positive, zero and negative sequence, amplitude and angle).

The CVMMXN function calculates three-phase power quantities by using fundamental frequency phasors (DFT values) of the measured current respectively voltage signals. The measured power quantities are available either, as instantaneously calculated quantities or, averaged values over a period of time (low pass filtered) depending on the selected settings.

13.4.3 Setting guidelines

The available setting parameters of the measurement function CVMMXN, CMMXU, VMMXU, CMSQI, VMSQI, VNMMXU are depending on the actual hardware (TRM) and the logic configuration made in PCM600.

The parameters for the Measurement functions CVMMXN, CMMXU, VMMXU, CMSQI, VMSQI, VNMMXU are set via the local HMI or PCM600.

GlobalBaseSel: Selects the global base value group used by the function to define (*IBase*), (*UBase*) and (*SBase*).

Operation: *Off*/*On*. Every function instance (CVMMXN, CMMXU, VMMXU, CMSQI, VMSQI, VNMMXU) can be taken in operation (*On*) or out of operation (*Off*).

The following general settings can be set for the **Measurement function** (CVMMXN).

PowAmpFact: Amplitude factor to scale power calculations.

PowAngComp: Angle compensation for phase shift between measured I & U.

Mode: Selection of measured current and voltage. There are 9 different ways of calculating monitored three-phase values depending on the available VT inputs connected to the IED. See parameter group setting table.

k: Low pass filter coefficient for power measurement, U and I.

UAmpCompY: Amplitude compensation to calibrate voltage measurements at Y% of Ur, where Y is equal to 5, 30 or 100.

IAmpCompY: Amplitude compensation to calibrate current measurements at Y% of Ir, where Y is equal to 5, 30 or 100.

IAngCompY: Angle compensation to calibrate angle measurements at Y% of Ir, where Y is equal to 5, 30 or 100.

The following general settings can be set for the **Phase-phase current measurement** (CMMXU).

IAmpCompY: Amplitude compensation to calibrate current measurements at Y% of Ir, where Y is equal to 5, 30 or 100.

IAngCompY: Angle compensation to calibrate angle measurements at Y% of Ir, where Y is equal to 5, 30 or 100.

The following general settings can be set for the **Phase-phase voltage measurement** (VMMXU).

UAmpCompY: Amplitude compensation to calibrate voltage measurements at Y% of Ur, where Y is equal to 5, 30 or 100.

UAngCompY: Angle compensation to calibrate angle measurements at Y% of Ur, where Y is equal to 5, 30 or 100.

The following general settings can be set for **all monitored quantities** included in the functions (CVMMXN, CMMXU, VMMXU, CMSQI, VMSQI, VNMMXU) X in setting names below equals S, P, Q, PF, U, I, F, IL1-3, UL1-3UL12-31, I1, I2, 3I0, U1, U2 or 3U0.

Xmin: Minimum value for analog signal X.

Xmax: Maximum value for analog signal X.

Xmin and *Xmax* values are directly set in applicable measuring unit, V, A, and so on, for all measurement functions, except CVMMXN where *Xmin* and *Xmax* values are set in % of *SBase*.

XZeroDb: Zero point clamping. A signal value less than *XZeroDb* is forced to zero.

XRepTyp: Reporting type. Cyclic (*Cyclic*), amplitude deadband (*Dead band*) or integral deadband (*Int deadband*). The reporting interval is controlled by the parameter *XDbRepInt*.

XDbRepInt: Reporting deadband setting. Cyclic reporting is the setting value and is reporting interval in seconds. Amplitude deadband is the setting value in % of measuring range. Integral deadband setting is the integral area, that is, measured value in % of measuring range multiplied by the time between two measured values.

Limits are directly set in applicable measuring unit, V, A , and so on, for all measureing functions, except CVMMXN where limits are set in % of *SBase*.

XHiHiLim: High-high limit.

XHiLim: High limit.

XLowLim: Low limit.

XLowLowLim: Low-low limit.

XLimHyst: Hysteresis value in % of range and is common for all limits.

All phase angles are presented in relation to defined reference channel. The parameter *PhaseAngleRef* defines the reference, see settings for analog input modules in PCM600.

Calibration curves

It is possible to calibrate the functions (CVMMXN, CMMXU, VNMMXU and VMMXU) to get class 0.5 presentations of currents, voltages and powers. This is accomplished by amplitude and angle compensation at 5, 30 and 100% of rated current and voltage. The compensation curve will have the characteristic for amplitude and angle compensation of currents as shown in figure 103 (example). The first phase will be used as reference channel and compared with the curve for calculation of factors. The factors will then be used for all related channels.

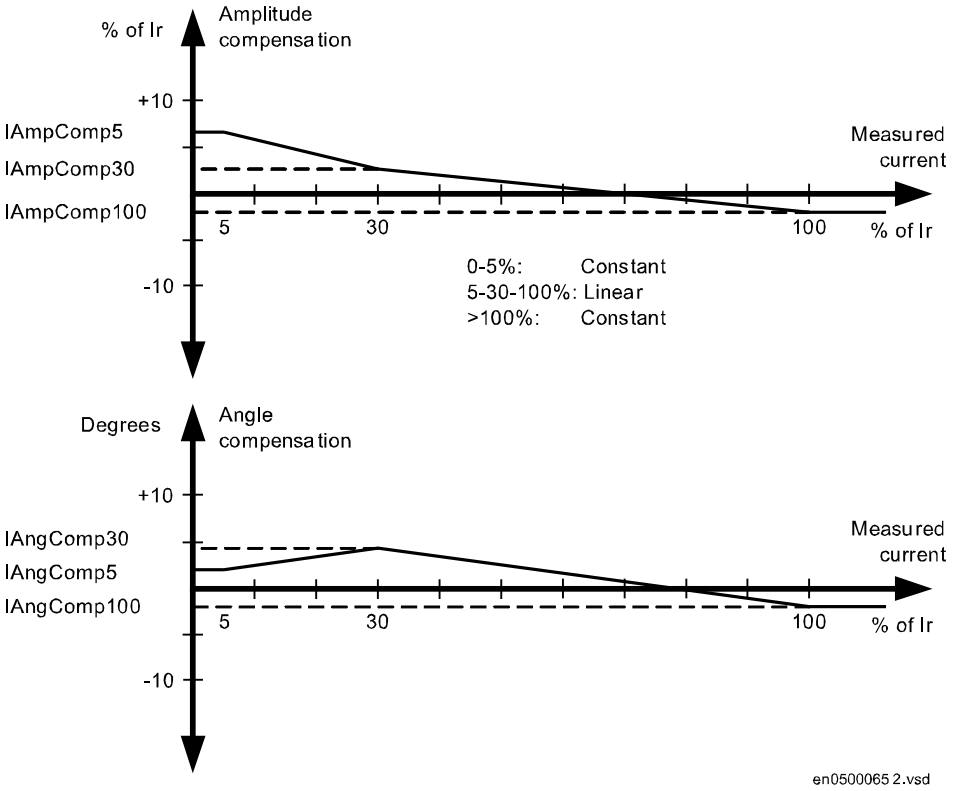

Figure 103: Calibration curves

13.4.4 Setting examples

Three setting examples, in connection to Measurement function (CVMMXN), are provided:

- Measurement function (CVMMXN) application for a 400 kV OHL
- Measurement function (CVMMXN) application on the secondary side of a transformer
- Measurement function (CVMMXN) application for a generator

For each of them detail explanation and final list of selected setting parameters values will be provided.

The available measured values of an IED are depending on the actual hardware (TRM) and the logic configuration made in PCM600.

13.4.4.1 Measurement function application for a 400 kV OHL

Single line diagram for this application is given in figure 104:

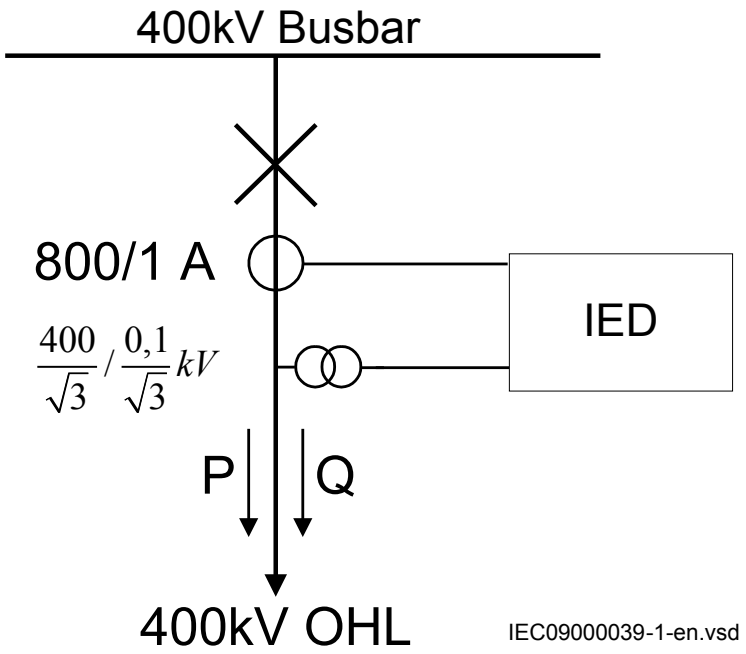

Figure 104: Single line diagram for 400 kV OHL application

In order to monitor, supervise and calibrate the active and reactive power as indicated in figure 104 it is necessary to do the following:

1. Set correctly CT and VT data and phase angle reference channel *PhaseAngleRef* (see settings for analog input modules in PCM600) using PCM600 for analog input channels
2. Connect, in PCM600, measurement function to three-phase CT and VT inputs
3. Set under General settings parameters for the Measurement function:
   - general settings as shown in table 27.
   - level supervision of active power as shown in table 28.
   - calibration parameters as shown in table 29.

Table 27: General settings parameters for the Measurement function

Setting	Short Description	Selected value	Comments
Operation	Operation *Off/On*	*On*	Function must be *On*
PowAmpFact	Amplitude factor to scale power calculations	1.000	It can be used during commissioning to achieve higher measurement accuracy. Typically no scaling is required
PowAngComp	Angle compensation for phase shift between measured I & U	0.0	It can be used during commissioning to achieve higher measurement accuracy. Typically no angle compensation is required. As well here required direction of P & Q measurement is towards protected object (as per IED internal default direction)
Mode	Selection of measured current and voltage	*L1, L2, L3*	All three phase-to-earth VT inputs are available
k	Low pass filter coefficient for power measurement, U and I	0.00	Typically no additional filtering is required

Table 28: Settings parameters for level supervision

Setting	Short Description	Selected value	Comments
PMin	Minimum value	-750	Minimum expected load
PMax	Minimum value	750	Maximum expected load
PZeroDb	Zero point clamping in 0.001% of range	3000	Set zero point clamping to 45 MW that is, 3% of 1500 MW
PRepTyp	Reporting type	db	Select amplitude deadband supervision
PDbRepInt	Cycl: Report interval (s), Db: In % of range, Int Db: In %s	2	Set ±Δdb=30 MW that is, 2% (larger changes than 30 MW will be reported)
PHiHiLim	High High limit (physical value)	600	High alarm limit that is, extreme overload alarm
PHiLim	High limit (physical value)	500	High warning limit that is, overload warning

Table continues on next page

Setting	Short Description	Selected value	Comments
PLowLim	Low limit (physical value)	-800	Low warning limit. Not active
PLowLowlLim	Low Low limit (physical value)	-800	Low alarm limit. Not active
PLimHyst	Hysteresis value in % of range (common for all limits)	2	Set ±Δ Hysteresis MW that is, 2%

Table 29: Settings for calibration parameters

Setting	Short Description	Selected value	Comments
IAmpComp5	Amplitude factor to calibrate current at 5% of Ir	0.00	
IAmpComp30	Amplitude factor to calibrate current at 30% of Ir	0.00	
IAmpComp100	Amplitude factor to calibrate current at 100% of Ir	0.00	
UAmpComp5	Amplitude factor to calibrate voltage at 5% of Ur	0.00	
UAmpComp30	Amplitude factor to calibrate voltage at 30% of Ur	0.00	
UAmpComp100	Amplitude factor to calibrate voltage at 100% of Ur	0.00	
IAngComp5	Angle calibration for current at 5% of Ir	0.00	
IAngComp30	Angle pre-calibration for current at 30% of Ir	0.00	
IAngComp100	Angle pre-calibration for current at 100% of Ir	0.00	

13.4.4.2 Measurement function application for a power transformer

Single line diagram for this application is given in figure 105.

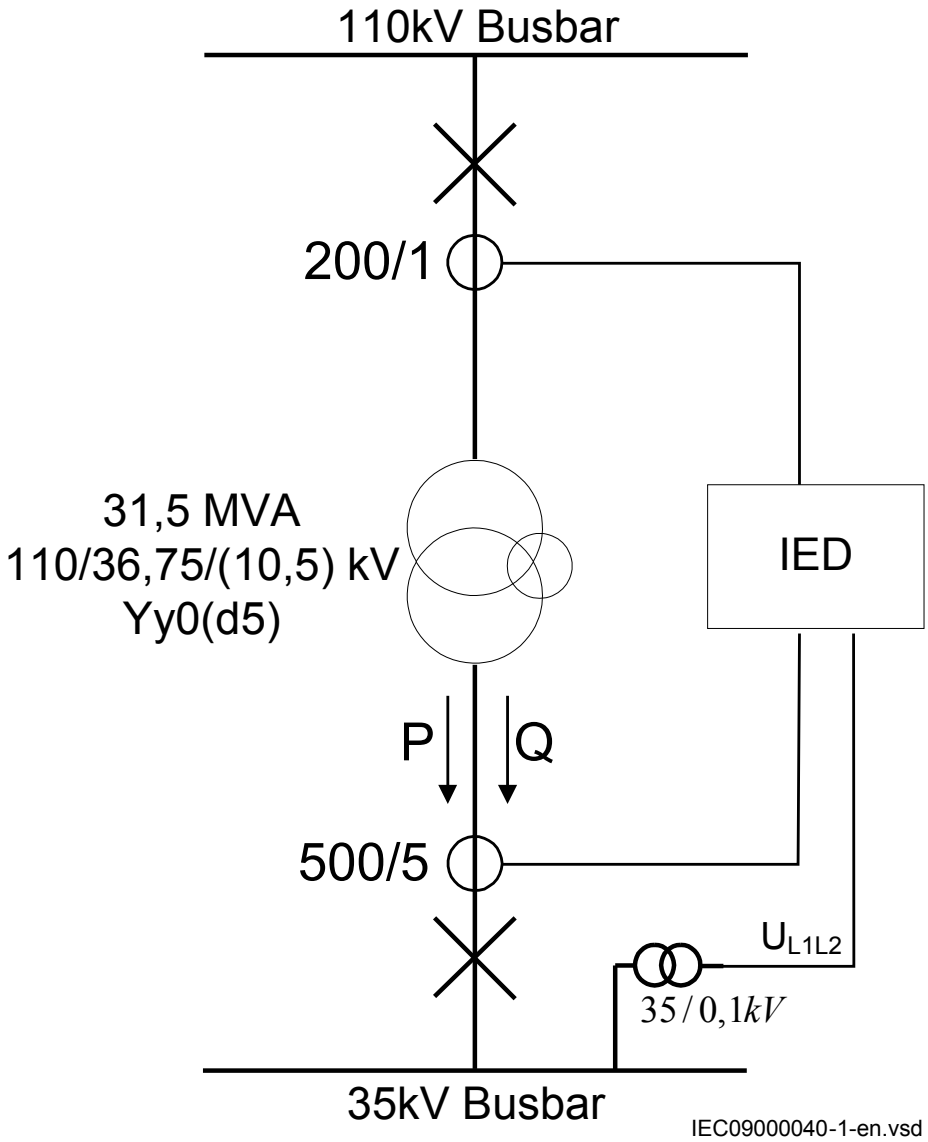

Figure 105: Single line diagram for transformer application

In order to measure the active and reactive power as indicated in figure 105, it is necessary to do the following:

1. Set correctly all CT and VT and phase angle reference channel *PhaseAngleRef* (see settings for analog input modules in PCM600) data using PCM600 for analog input channels
2. Connect, in PCM600, measurement function to LV side CT & VT inputs
3. Set the setting parameters for relevant Measurement function as shown in the following table 30:

Table 30: General settings parameters for the Measurement function

Setting	Short description	Selected value	Comment
Operation	Operation *Off On*	*On*	Function must be *On*
PowAmpFact	Amplitude factor to scale power calculations	1.000	Typically no scaling is required
PowAngComp	Angle compensation for phase shift between measured I & U	180.0	Typically no angle compensation is required. However here the required direction of P & Q measurement is towards busbar (Not per IED internal default direction). Therefore angle compensation have to be used in order to get measurements in aliment with the required direction.
Mode	Selection of measured current and voltage	*L1L2*	Only UL1L2 phase-to-phase voltage is available
k	Low pass filter coefficient for power measurement, U and I	0.00	Typically no additional filtering is required

13.5 Event counter CNTGGIO

13.5.1 Identification

Function description	IEC 61850 identification	IEC 60617 identification	ANSI/IEEE C37.2 device number
Event counter	CNTGGIO		-

13.5.2 Application

Event counter (CNTGGIO) has six counters which are used for storing the number of times each counter has been activated. CNTGGIO can be used to count how many times a specific function, for example the tripping logic, has issued a trip signal. All six counters have a common blocking and resetting feature.

13.5.3 Setting guidelines

Operation: Sets the operation of Event counter (CNTGGIO) *On* or *Off*.

13.6 Disturbance report

13.6.1 Identification

Function description	IEC 61850 identification	IEC 60617 identification	ANSI/IEEE C37.2 device number
Disturbance report	DRPRDRE	-	-
Analog input signals	A1RADR	-	-
Analog input signals	A2RADR	-	-
Analog input signals	A3RADR	-	-
Analog input signals	A4RADR	-	-
Binary input signals	B1RBDR	-	-
Binary input signals	B2RBDR	-	-
Binary input signals	B3RBDR	-	-
Binary input signals	B4RBDR	-	-
Binary input signals	B5RBDR	-	-
Binary input signals	B6RBDR	-	-

13.6.2 Application

To get fast, complete and reliable information about disturbances in the primary and/or in the secondary system it is very important to gather information on fault currents, voltages and events. It is also important having a continuous event-logging to be able to monitor in an overview perspective. These tasks are accomplished by the disturbance report function DRPRDRE and facilitate a better understanding of the power system behavior and related primary and secondary equipment during and after a disturbance. An analysis of the recorded data provides valuable information that can be used to explain a disturbance, basis for change of IED setting plan, improve existing equipment, and so on. This information can also be used in a longer perspective when planning for and designing new installations, that is, a disturbance recording could be a part of Functional Analysis (FA).

Disturbance report DRPRDRE, always included in the IED, acquires sampled data of all selected analog and binary signals connected to the function blocks that is,

- maximum 30 external analog signals,
- 10 internal derived analog signals, and
- 96 binary signals.

Disturbance report function is a common name for several functions that is, Indications, Event recorder, Event list, Trip value recorder, Disturbance recorder.

Disturbance report function is characterized by great flexibility as far as configuration, starting conditions, recording times, and large storage capacity are

concerned. Thus, disturbance report is not dependent on the operation of protective functions, and it can record disturbances that were not discovered by protective functions for one reason or another. Disturbance report can be used as an advanced stand-alone disturbance recorder.

Every disturbance report recording is saved in the IED. The same applies to all events, which are continuously saved in a ring-buffer. Local HMI can be used to get information about the recordings, and the disturbance report files may be uploaded in the PCM600 using the Disturbance handling tool, for report reading or further analysis (using WaveWin, that can be found on the PCM600 installation CD). The user can also upload disturbance report files using FTP or MMS (over 61850–8–1) clients.

If the IED is connected to a station bus (IEC 61850-8-1), the disturbance recorder (record made and fault number) and the fault locator information are available as GOOSE or Report Control data.

13.6.3 Setting guidelines

The setting parameters for the Disturbance report function DRPRDRE are set via the local HMI or PCM600.

It is possible to handle up to 40 analog and 96 binary signals, either internal signals or signals coming from external inputs. The binary signals are identical in all functions that is, Disturbance recorder, Event recorder, Indication, Trip value recorder and Event list function.

User-defined names of binary and analog input signals is set using PCM600. The analog and binary signals appear with their user-defined names. The name is used in all related functions (Disturbance recorder, Event recorder, Indication, Trip value recorder and Event list).

Figure 106 shows the relations between Disturbance report, included functions and function blocks. Event list, Event recorder and Indication uses information from the binary input function blocks (BxRBDR). Trip value recorder uses analog information from the analog input function blocks (AxRADR),. Disturbance report function acquires information from both AxRADR and BxRBDR.

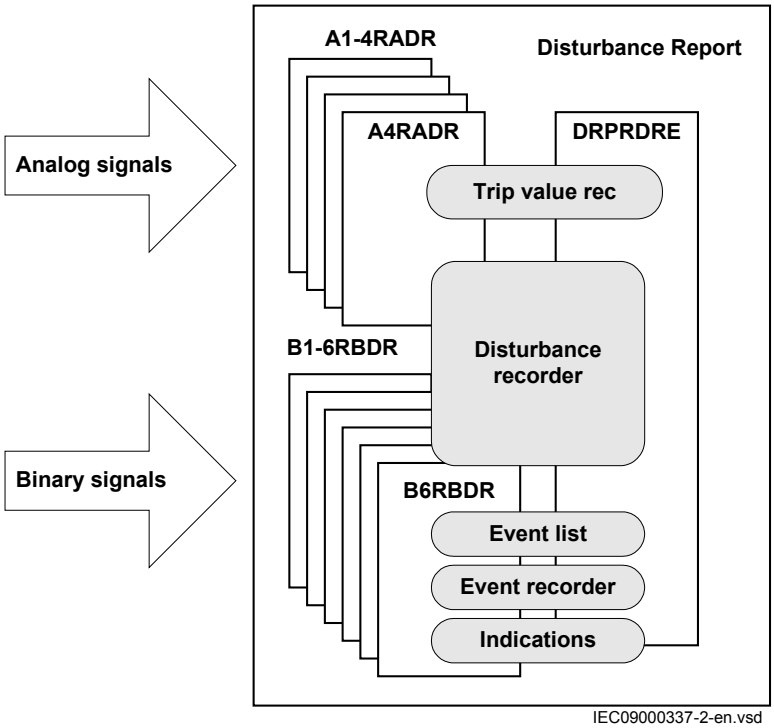

Figure 106: Disturbance report functions and related function blocks

For Disturbance report function there are a number of settings which also influences the sub-functions.

Three LED indications placed above the LCD screen makes it possible to get quick status information about the IED.

Green LED:	Steady light	In Service
	Flashing light	Internal failure
	Dark	No power supply
Yellow LED:	Function controlled by SetLEDn setting in Disturbance report function.	
Red LED:	Function controlled by SetLEDn setting in Disturbance report function.	

Operation

The operation of Disturbance report function DRPRDRE has to be set *On* or *Off*. If *Off* is selected, note that no disturbance report is registered, and none sub-function will operate (the only general parameter that influences Event list).

Operation = Off:

- Disturbance reports are not stored.
- LED information (yellow - start, red - trip) is not stored or changed.

Operation = *On*:

- Disturbance reports are stored, disturbance data can be read from the local HMI and from a PC using PCM600.
- LED information (yellow - start, red - trip) is stored.

Every recording will get a number (0 to 999) which is used as identifier (local HMI, disturbance handling tool and IEC 61850). An alternative recording identification is date, time and sequence number. The sequence number is automatically increased by one for each new recording and is reset to zero at midnight. The maximum number of recordings stored in the IED is 100. The oldest recording will be overwritten when a new recording arrives (FIFO).

To be able to delete disturbance records, *Operation* parameter has to be *On*.

The maximum number of recordings depend on each recordings total recording time. Long recording time will reduce the number of recordings to less than 100.

The IED flash disk should NOT be used to store any user files. This might cause disturbance recordings to be deleted due to lack of disk space.

Recording times

The different recording times for Disturbance report are set (the pre-fault time, post-fault time, and limit time). These recording times affect all sub-functions more or less but not the Event list function.

Prefault recording time (*PreFaultRecT*) is the recording time before the starting point of the disturbance. The setting should be at least *0.1* s to ensure enough samples for the estimation of pre-fault values in the Trip value recorder function.

Postfault recording time (*PostFaultRecT*) is the maximum recording time after the disappearance of the trig-signal (does not influence the Trip value recorder function).

Recording time limit (*TimeLimit*) is the maximum recording time after trig. The parameter limits the recording time if some trigging condition (fault-time) is very long or permanently set (does not influence the Trip value recorder function).

Post retrigger (*PostRetrig*) can be set to *On* or *Off*. Makes it possible to choose performance of Disturbance report function if a new trig signal appears in the post-fault window.

PostRetrig = Off

The function is insensitive for new trig signals during post fault time.

PostRetrig = On

The function completes current report and starts a new complete report that is, the latter will include:

- new pre-fault- and fault-time (which will overlap previous report)
- events and indications might be saved in the previous report too, due to overlap
- new trip value calculations if installed, in operation and started

Operation in test mode

If the IED is in test mode and *OpModeTest = Off*. Disturbance report function does not save any recordings and no LED information is displayed.

If the IED is in test mode and *OpModeTest = On*. Disturbance report function works in normal mode and the status is indicated in the saved recording.

13.6.3.1 Binary input signals

Up to 96 binary signals can be selected among internal logical and binary input signals. The configuration tool is used to configure the signals.

For each of the 96 signals, it is also possible to select if the signal is to be used as a trigger for the start of the Disturbance report and if the trigger should be activated on positive (1) or negative (0) slope.

OperationN: Disturbance report may trig for binary input N (*On*) or not (*Off*).

TrigLevelN: Trig on positive (*Trig on 1*) or negative (*Trig on 0*) slope for binary input N.

13.6.3.2 Analog input signals

Up to 40 analog signals can be selected among internal analog and analog input signals. PCM600 is used to configure the signals.

The analog trigger of Disturbance report is not affected if analog input M is to be included in the disturbance recording or not (*OperationM = On*/*Off*).

If *OperationM = Off*, no waveform (samples) will be recorded and reported in graph. However, Trip value, pre-fault and fault value will be recorded and reported. The input channel can still be used to trig the disturbance recorder.

If *OperationM* = *On*, waveform (samples) will also be recorded and reported in graph.

NomValueM: Nominal value for input M.

OverTrigOpM, *UnderTrigOpM*: Over or Under trig operation, Disturbance report may trig for high/low level of analog input M (*On*) or not (*Off*).

OverTrigLeM, *UnderTrigLeM*: Over or under trig level, Trig high/low level relative nominal value for analog input M in percent of nominal value.

13.6.3.3 Sub-function parameters

All functions are in operation as long as Disturbance report is in operation.

Indications

IndicationMaN: Indication mask for binary input N. If set (*Show*), a status change of that particular input, will be fetched and shown in the disturbance summary on local HMI. If not set (*Hide*), status change will not be indicated.

SetLEDN: Set yellow *Start* and red *Trip* LED on local HMI in front of the IED if binary input N changes status.

Disturbance recorder

OperationM: Analog channel M is to be recorded by the disturbance recorder (*On*) or not (*Off*).

If *OperationM* = *Off*, no waveform (samples) will be recorded and reported in graph. However, Trip value, pre-fault and fault value will be recorded and reported. The input channel can still be used to trig the disturbance recorder.

If *OperationM* = *On*, waveform (samples) will also be recorded and reported in graph.

Event recorder

Event recorder function has no dedicated parameters.

Trip value recorder

ZeroAngleRef: The parameter defines which analog signal that will be used as phase angle reference for all other analog input signals. This signal will also be used for frequency measurement and the measured frequency is used when calculating trip values. It is suggested to point out a sampled voltage input signal, for example, a line or busbar phase voltage (channel 1-30).

Event list

Event list function has no dedicated parameters.

13.6.3.4 Consideration

The density of recording equipment in power systems is increasing, since the number of modern IEDs, where recorders are included, is increasing. This leads to a vast number of recordings at every single disturbance and a lot of information has

to be handled if the recording functions do not have proper settings. The goal is to optimize the settings in each IED to be able to capture just valuable disturbances and to maximize the number that is possible to save in the IED.

The recording time should not be longer than necessary (*PostFaultrecT* and *TimeLimit*).

- Should the function record faults only for the protected object or cover more?
- How long is the longest expected fault clearing time?
- Is it necessary to include reclosure in the recording or should a persistent fault generate a second recording (*PostRetrig*)?

Minimize the number of recordings:

- Binary signals: Use only relevant signals to start the recording that is, protection trip, carrier receive and/or start signals.
- Analog signals: The level triggering should be used with great care, since unfortunate settings will cause enormously number of recordings. If nevertheless analog input triggering is used, chose settings by a sufficient margin from normal operation values. Phase voltages are not recommended for trigging.

Remember that values of parameters set elsewhere are linked to the information on a report. Such parameters are, for example, station and object identifiers, CT and VT ratios.

13.7 Measured value expander block MVEXP

13.7.1 Identification

Function description	IEC 61850 identification	IEC 60617 identification	ANSI/IEEE C37.2 device number
Measured value expander block	MVEXP	-	-

13.7.2 Application

The current and voltage measurements functions (CVMMXN, CMMXU, VMMXU and VNMMXU), current and voltage sequence measurement functions (CMSQI and VMSQI) and IEC 61850 generic communication I/O functions (MVGGIO) are provided with measurement supervision functionality. All measured values can be supervised with four settable limits, that is low-low limit, low limit, high limit and high-high limit. The measure value expander block (MVEXP) has been introduced to be able to translate the integer output signal from the measuring functions to 5 binary signals, that is below low-low limit, below low limit, normal, above high-high limit or above high limit. The output signals can be used as conditions in the configurable logic.

13.7.3 Setting guidelines

The function does not have any parameters available in Local HMI or Protection and Control IED Manager (PCM600).

GlobalBaseSel: Selects the global base value group used by the function to define (*IBase*), (*UBase*) and (*SBase*).

13.8 Station battery supervision SPVNZBAT

13.8.1 Identification

Function description	IEC 61850 identification	IEC 60617 identification	ANSI/IEEE C37.2 device number
Station battery supervision function	SPVNZBAT	U<>	-

13.8.2 Application

Usually, the load on the DC system is a constant resistance load, for example, lamps, LEDs, electronic instruments and electromagnetic contactors in a steady state condition. A transient RL load exists when breakers are tripped or closed.

The battery voltage has to be continuously monitored as the batteries can withstand moderate overvoltage and undervoltage only for a short period of time.

- If the battery is subjected to a prolonged or frequent overvoltage, it leads to the ageing of the battery, which may lead to the earlier failure of the battery. The other occurrences may be the thermal runaway, generation of heat or increased amount of hydrogen gas and the depletion of fluid in case of valve regulated batteries.

- If the value of the charging voltage drops below the minimum recommended float voltage of the battery, the battery does not receive sufficient charging current to offset internal losses, resulting in a gradual loss of capacity.
  - If a lead acid battery is subjected to a continuous undervoltage, heavy sulfation occurs on the plates, which leads to the loss of the battery capacity.

13.9 Insulation gas monitoring function SSIMG

13.9.1 Identification

Function description	IEC 61850 identification	IEC 60617 identification	ANSI/IEEE C37.2 device number
Insulation gas monitoring function	SSIMG	-	63

13.9.2 Application

Insulation gas monitoring function (SSIMG) is used for monitoring the circuit breaker condition. Proper arc extinction by the compressed gas in the circuit breaker is very important. When the pressure becomes too low compared to the required value, the circuit breaker operation gets blocked to minimize the risk of internal failure. Binary information based on the gas pressure in the circuit breaker is used as input signals to the function. In addition to that, the function generates alarms based on received information.

13.10 Insulation liquid monitoring function SSIML

13.10.1 Identification

Function description	IEC 61850 identification	IEC 60617 identification	ANSI/IEEE C37.2 device number
Insulation liquid monitoring function	SSIML	-	71

13.10.2 Application

Insulation liquid monitoring function (SSIML) is used for monitoring the circuit breaker condition. Proper arc extinction by the compressed oil in the circuit breaker is very important. When the level becomes too low, compared to the required value, the circuit breaker operation is blocked to minimize the risk of internal failures. Binary information based on the oil level in the circuit breaker is used as input signals to the function. In addition to that, the function generates alarms based on received information.

13.11 Circuit breaker condition monitoring SSCBR

13.11.1 Identification

Function description	IEC 61850 identification	IEC 60617 identification	ANSI/IEEE C37.2 device number
Circuit breaker condition monitoring	SSCBR	-	-

13.11.2 Application

SSCBR includes different metering and monitoring subfunctions.

Circuit breaker status

Circuit breaker status monitors the position of the circuit breaker, that is, whether the breaker is in an open, closed or intermediate position.

Circuit breaker operation monitoring

The purpose of the circuit breaker operation monitoring is to indicate that the circuit breaker has not been operated for a long time. The function calculates the number of days the circuit breaker has remained inactive, that is, has stayed in the same open or closed state. There is also the possibility to set an initial inactive day.

Breaker contact travel time

High travelling times indicate the need for maintenance of the circuit breaker mechanism. Therefore, detecting excessive travelling time is needed. During the opening cycle operation, the main contact starts opening. The auxiliary contact A opens, the auxiliary contact B closes, and the main contact reaches its opening position. During the closing cycle, the first main contact starts closing. The auxiliary contact B opens, the auxiliary contact A closes, and the main contact reaches its close position. The travel times are calculated based on the state changes of the auxiliary contacts and the adding correction factor to consider the time difference of the main contact's and the auxiliary contact's position change.

Operation counter

Routine maintenance of the breaker, such as lubricating breaker mechanism, is generally based on a number of operations. A suitable threshold setting, to raise an alarm when the number of operation cycle exceeds the set limit, helps preventive maintenance. This can also be used to indicate the requirement for oil sampling for dielectric testing in case of an oil circuit breaker.

The change of state can be detected from the binary input of the auxiliary contact. There is a possibility to set an initial value for the counter which can be used to initialize this functionality after a period of operation or in case of refurbished primary equipment.

Accumulation of I^yt

Accumulation of I^yt calculates the accumulated energy ΣI^yt where the factor y is known as the current exponent. The factor y depends on the type of the circuit breaker. For oil circuit breakers the factor y is normally 2. In case of a high-voltage system, the factor y can be 1.4...1.5.

Remaining life of the breaker

Every time the breaker operates, the life of the circuit breaker reduces due to wearing. The wearing in the breaker depends on the tripping current, and the remaining life of the breaker is estimated from the circuit breaker trip curve provided by the manufacturer.

Example for estimating the remaining life of a circuit breaker

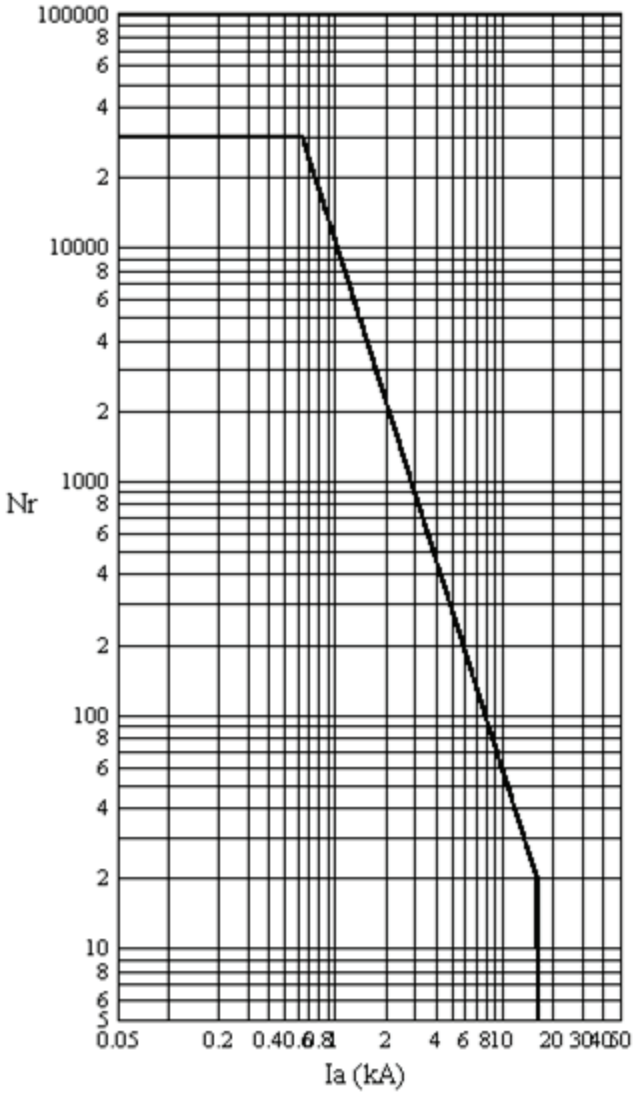

Figure 107: Trip Curves for a typical 12 kV, 630 A, 16 kA vacuum interrupter

Nr	the number of closing-opening operations allowed for the circuit breaker
Ia	the current at the time of tripping of the circuit breaker

Calculation of Directional Coefficient

The directional coefficient is calculated according to the formula:

$$Directional\,Coef = \frac{\log\left(\frac{B}{A}\right)}{\log\left(\frac{I_f}{I_r}\right)} = -2.2609$$

(Equation 98)

I_r	Rated operating current = 630 A
I_f	Rated fault current = 16 kA
A	Op number rated = 30000
B	Op number fault = 20

Calculation for estimating the remaining life

The equation shows that there are 30,000 possible operations at the rated operating current of 630 A and 20 operations at the rated fault current 16 kA. Therefore, if the tripping current is 10 kA, one operation at 10 kA is equivalent to 30,000/500=60 operations at the rated current. It is also assumed that prior to this tripping, the remaining life of the circuit breaker is 15,000 operations. Therefore, after one operation of 10 kA, the remaining life of the circuit breaker is 15,000-60=14,940 at the rated operating current.

Spring charging time indication

For normal operation of the circuit breaker, the circuit breaker spring should be charged within a specified time. Therefore, detecting long spring charging time indicates that it is time for the circuit breaker maintenance. The last value of the spring charging time can be used as a service value.

Gas pressure supervision

The gas pressure supervision monitors the gas pressure inside the arc chamber. When the pressure becomes too low compared to the required value, the circuit breaker operations are locked. A binary input is available based on the pressure levels in the function, and alarms are generated based on these inputs.

Section 14 Metering

14.1 Pulse counter PCGGIO

14.1.1 Identification

Function description	IEC 61850 identification	IEC 60617 identification	ANSI/IEEE C37.2 device number
Pulse counter	PCGGIO	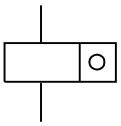	-

14.1.2 Application

Pulse counter (PCGGIO) function counts externally generated binary pulses, for instance pulses coming from an external energy meter, for calculation of energy consumption values. The pulses are captured by the binary input module (BIO), and read by the PCGGIO function. The number of pulses in the counter is then reported via the station bus to the substation automation system or read via the station monitoring system as a service value. When using IEC 61850–8–1, a scaled service value is available over the station bus.

The normal use for this function is the counting of energy pulses from external energy meters. An optional number of inputs from the binary input module in IED can be used for this purpose with a frequency of up to 10 Hz. PCGGIO can also be used as a general purpose counter.

14.1.3 Setting guidelines

From PCM600, these parameters can be set individually for each pulse counter:

- *Operation*: *Off*/*On*
- *tReporting*: *0-3600s*
- *EventMask*: *NoEvents*/*ReportEvents*

The configuration of the inputs and outputs of PCGGIO function block is made with PCM600.

On the binary input output module (BIO), the debounce filter default time is set to 5 ms, that is, the counter suppresses pulses with a pulse length less than 5 ms. The

binary input channels on the binary input output module (BIO) have individual settings for debounce time, oscillation count and oscillation time. The values can be changed in the local HMI and PCM600 under **Main menu/Configuration/I/O modules**

The setting isindividual for all input channels on the binary input output module (BIO), that is, if changes of the limits are made for inputs not connected to the pulse counter, it will not influence the inputs used for pulse counting.

14.2 Energy calculation and demand handling EPTMMTR

14.2.1 Identification

Function description	IEC 61850 identification	IEC 60617 identification	ANSI/IEEE C37.2 device number
Energy calculation and demand handling	ETPMMTR	Wh↔	-

14.2.2 Application

Energy calculation and demand handling function ETPMMTR is intended for statistics of the forward and reverse active and reactive energy. It has a high accuracy basically given by the measurements function (CVMMXN). This function has a site calibration possibility to further increase the total accuracy.

The function is connected to the instantaneous outputs of (CVMMXN) as shown in figure 108.

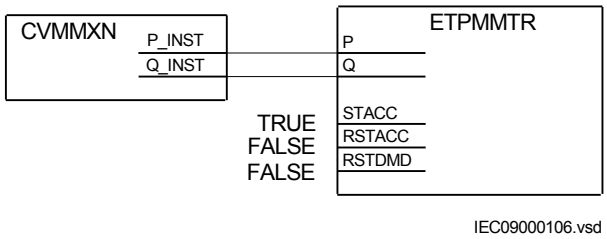

Figure 108: Connection of energy calculation and demand handling function ETPMMTR to the measurements function (CVMMXN)

The energy values can be read through communication in MWh and MVarh in monitoring tool of PCM600 and/or alternatively the values can be presented on the local HMI. The local HMI graphical display is configured with PCM600 Graphical

display editor tool (GDE) with a measuring value which is selected to the active and reactive component as preferred. All four values can also be presented.

Maximum demand values are presented in MWh or MVarh in the same way.

Alternatively, the values can be presented with use of the pulse counters function (PCGGIO). The output values are scaled with the pulse output setting values *EAFAccPlsQty*, *EARAccPlsQty*, *ERFAccPlsQty* and *ERRAccPlsQty* of the energy metering function and then the pulse counter can be set-up to present the correct values by scaling in this function. Pulse counter values can then be presented on the local HMI in the same way and/or sent to the SA system through communication where the total energy then is calculated by summation of the energy pulses. This principle is good for very high values of energy as the saturation of numbers else will limit energy integration to about one year with 50 kV and 3000 A. After that the accumulation will start on zero again.

14.2.3 Setting guidelines

The parameters are set via the local HMI or PCM600.

The following settings can be done for the energy calculation and demand handling function ETPMMTR:

GlobalBaseSel: Selects the global base value group used by the function to define (*IBase*), (*UBase*) and (*SBase*).

Operation: *Off*/*On*

tEnergy: Time interval when energy is measured.

StartAcc: *Off*/*On* is used to switch the accumulation of energy on and off.

The input signal STACC is used to start accumulation. Input signal STACC cannot be used to halt accumulation. The energy content is reset every time STACC is activated. STACC can for example, be used when an external clock is used to switch two active energy measuring function blocks on and off to have indication of two tariffs.

tEnergyOnPls: gives the pulse length ON time of the pulse. It should be at least *100* ms when connected to the Pulse counter function block. Typical value can be *100* ms.

tEnergyOffPls: gives the OFF time between pulses. Typical value can be *100* ms.

EAFAccPlsQty and *EARAccPlsQty*: gives the MWh value in each pulse. It should be selected together with the setting of the Pulse counter (PCGGIO) settings to give the correct total pulse value.

ERFAccPlsQty and *ERRAccPlsQty*: gives the MVarh value in each pulse. It should be selected together with the setting of the Pulse counter (PCGGIO) settings to give the correct total pulse value.

For the advanced user there are a number of settings for direction, zero clamping, max limit, and so on. Normally, the default values are suitable for these parameters.

Section 15 Station communication

15.1 IEC61850-8-1 communication protocol

15.1.1 Identification

Function description	IEC 61850 identification	IEC 60617 identification	ANSI/IEEE C37.2 device number
IEC 61850-8-1 communication protocol	IEC 61850-8-1	-	-

15.1.2 Application

IEC 61850-8-1 communication protocol allows vertical communication to HSI clients and allows horizontal communication between two or more intelligent electronic devices (IEDs) from one or several vendors to exchange information and to use it in the performance of their functions and for correct co-operation.

GOOSE (Generic Object Oriented Substation Event), which is a part of IEC 61850–8–1 standard, allows the IEDs to communicate state and control information amongst themselves, using a publish-subscribe mechanism. That is, upon detecting an event, the IED(s) use a multi-cast transmission to notify those devices that have registered to receive the data. An IED can, by publishing a GOOSE message, report its status. It can also request a control action to be directed at any device in the network.

Figure 109 shows the topology of an IEC 61850–8–1 configuration. IEC 61850–8–1 specifies only the interface to the substation LAN. The LAN itself is left to the system integrator.

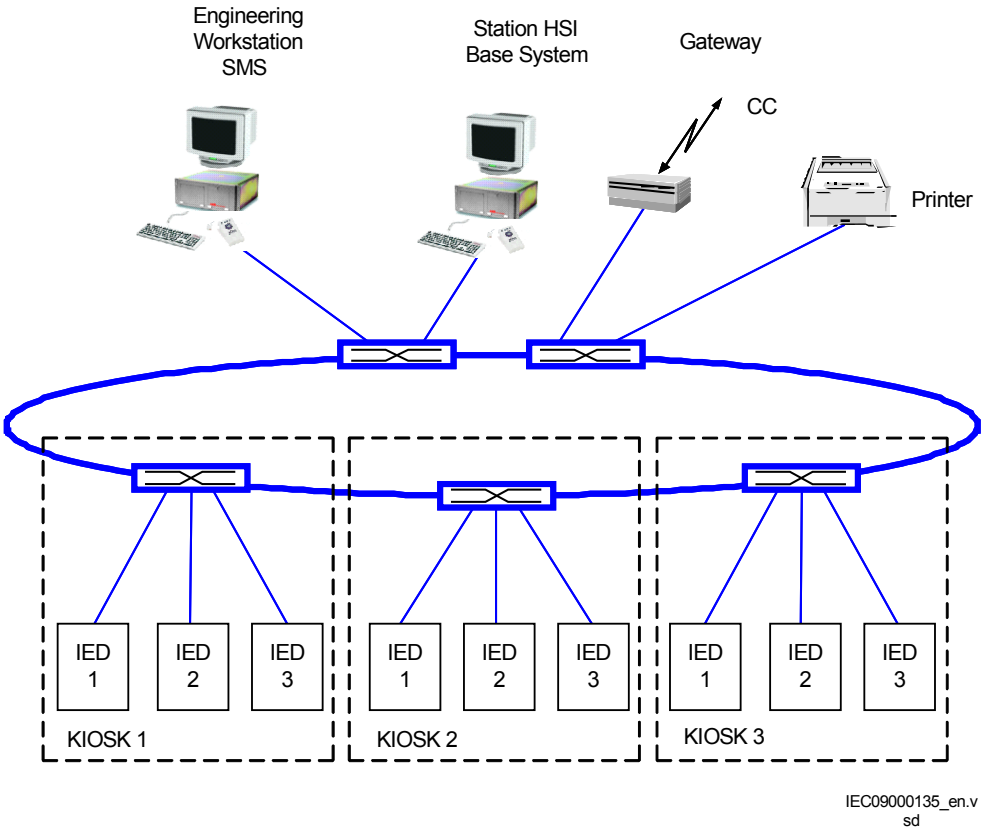

Figure 109: Example of a communication system with IEC 61850–8–1

Figure 110 shows the GOOSE peer-to-peer communication.

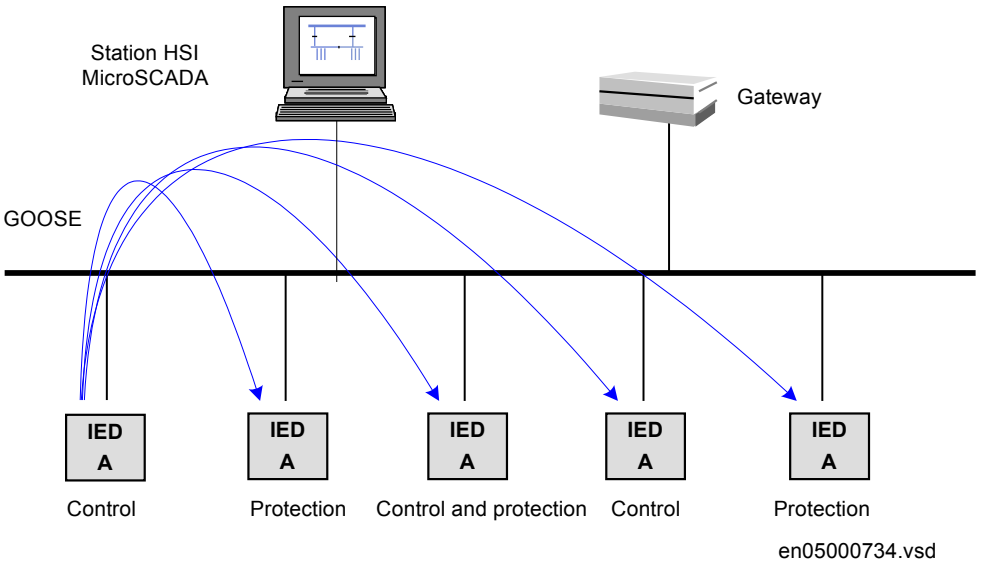

Figure 110: Example of a broadcasted GOOSE message

15.1.2.1 Horizontal communication via GOOSE

GOOSE messages are sent in horizontal communication between the IEDs. The information, which is exchanged, is used for station wide interlocking, breaker failure protection, busbar voltage selection and so on.

The simplified principle is shown in Figure 111 and can be described as follows. When IED1 has decided to transmit the data set it forces a transmission via the station bus. All other IEDs receive the data set, but only those who have this data set in their address list will take it and keep it in an input container. It is defined, that the receiving IED will take the content of the received data set and makes it available for the application configuration.

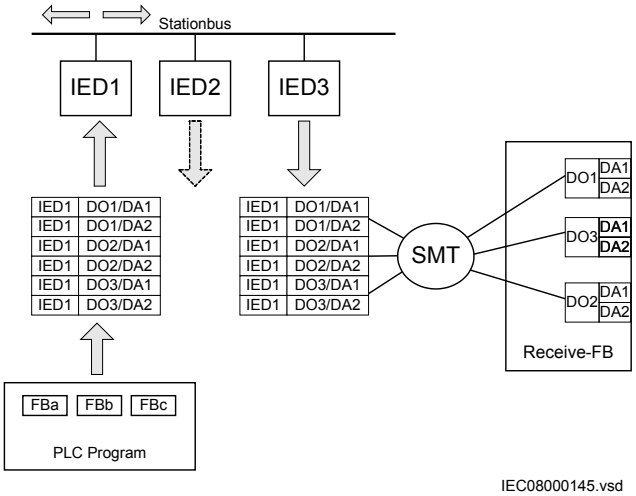

Figure 111: SMT: GOOSE principle and signal routing with SMT

Special function blocks take the data set and present it via the function block as output signals for application functions in the application configuration. Different GOOSE receive function blocks are available for the specific tasks.

SMT links the different data object attributes (for example stVal or magnitude) to the output signal to make it available for functions in the application configuration. When a matrix cell array is marked red the IEC 61850–8–1 data attribute type does not fit together, even if the GOOSE receive function block is the partner. SMT checks this on the content of the received data set. See Figure 112

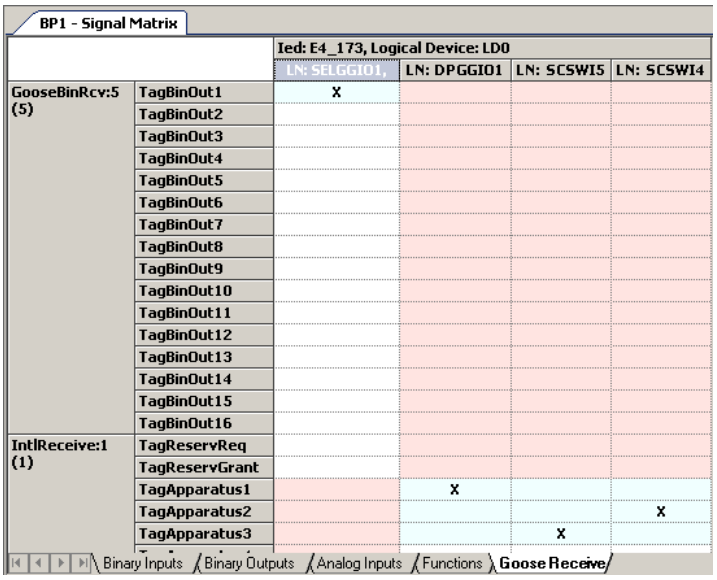

IEC08000174.vsd

Figure 112: SMT: GOOSE marshalling with SMT

GOOSE receive function blocks extract process information, received by the data set, into single attribute information that can be used within the application configuration. Crosses in the SMT matrix connect received values to the respective function block signal in SMT, see Figure 113

The corresponding quality attribute is automatically connected by SMT. This quality attribute is available in ACT, through the outputs of the available GOOSE function blocks.

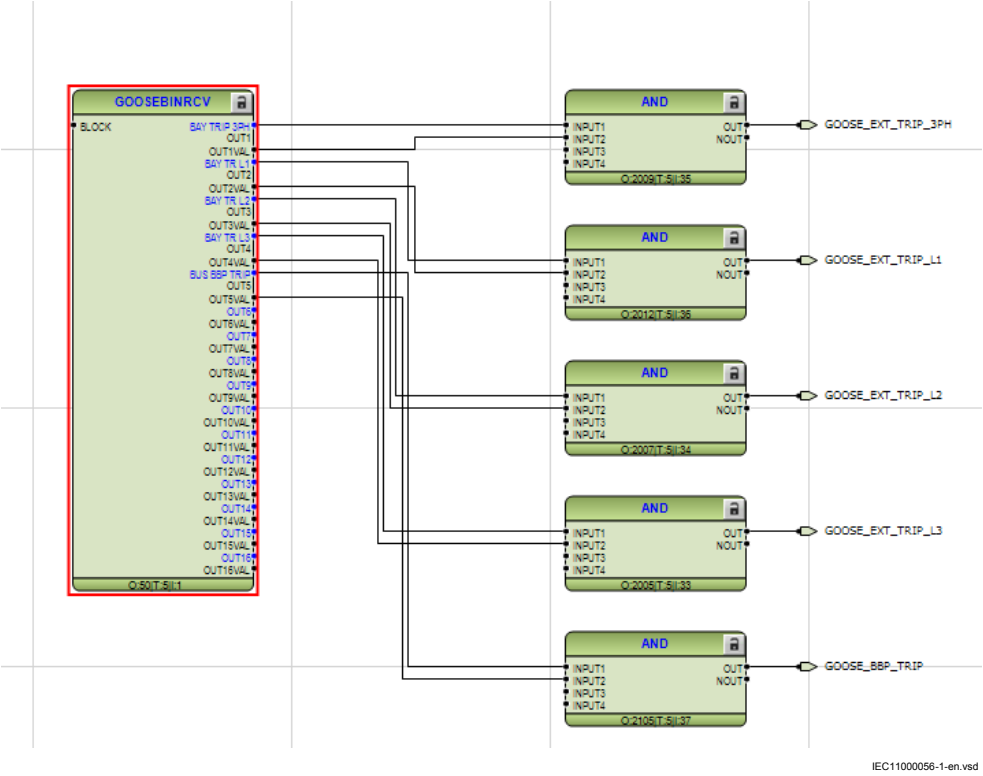

Figure 113: SMT: GOOSE receive function block with converted signals

GOOSEVCTRCONF function is used to control the rate (in seconds) at which voltage control information from TR8ATCC is transmitted/received to/from other IEDs via GOOSE communication. GOOSEVCTRCONF function is visible in PST.

The following voltage control information can be sent from TR8ATCC via GOOSE communication:

- BusV
- LoadAIm
- LoadARe
- PosRel
- SetV
- VCTRStatus
- X2

GOOSEVCTRRCV component receives the voltage control data from GOOSE network at the user defined rate.

This component also checks the received data validity, communication validity and test mode. Communication validity will be checked upon the rate of data reception. Data validity also depends upon the communication. If communication is invalid then data validity will also be invalid. IEC 61850 also checks for data validity using internal parameters which will also be passed to the DATAVALID output.

15.1.3 Setting guidelines

There are two settings related to the IEC 61850–8–1 protocol:

Operation User can set IEC 61850 communication to *On* or *Off*.

GOOSE has to be set to the Ethernet link where GOOSE traffic shall be send and received.

IEC 61850–8–1 specific data (logical nodes etc.) per included function in an IED can be found in the communication protocol manual for IEC 61850–8–1.

The setting parameters for GOOSEVCTRCONF are described below:

SendOperation: This setting sets the send functionality ON or OFF.

ReceiveOperation: This setting sets the receive functionality ON or OFF.

SendInterval: This parameter sets the rate at which VCTR Send component need to transmit the GOOSE message over network. Default value of the send interval is 0.3s. Minimum value of the send interval can be set to 0.1s and maximum as 5.0s.

ReceiveInterval: This parameter sets the rate at which VCTR receive component need to receive the GOOSE message from the network. Default value of the receive interval is 0.8s. Minimum value of the send interval can be set to 0.1s and maximum as 10.0s

Receive interval should be greater than the send interval. With this configuration receiving component shall always have the updated value. For example *ReceiveInterval* > 2•*SendInterval*.

15.2 DNP3 protocol

DNP3 (Distributed Network Protocol) is a set of communications protocols used to communicate data between components in process automation systems. For a detailed description of the DNP3 protocol, see the DNP3 Communication protocol manual.

15.3 IEC 60870-5-103 communication protocol

IEC 60870-5-103 is an unbalanced (master-slave) protocol for coded-bit serial communication exchanging information with a control system, and with a data transfer rate up to 19200 bit/s. In IEC terminology, a primary station is a master

and a secondary station is a slave. The communication is based on a point-to-point principle. The master must have software that can interpret IEC 60870-5-103 communication messages.

The Communication protocol manual for IEC 60870-5-103 includes the 650 series vendor specific IEC 60870-5-103 implementation.

IEC 60870-5-103 protocol can be configured to use either the optical serial or RS485 serial communication interface on the COM05 communication module. The functions Operation selection for optical serial (OPTICALPROT) and Operation selection for RS485 (RS485PROT) are used to select the communication interface.

See the Engineering manual for IEC103 60870-5-103 engineering procedures in PCM600.

The functions IEC60870-5-103 Optical serial communication (OPTICAL103) and IEC60870-5-103 serial communication for RS485 (RS485103) are used to configure the communication parameters for either the optical serial or RS485 serial communication interfaces.

Section 16 Basic IED functions

16.1 Self supervision with internal event list

16.1.1 Identification

Function description	IEC 61850 identification	IEC 60617 identification	ANSI/IEEE C37.2 device number
Internal error signal	INTERRSIG	-	-
Internal event list	SELFSUPEVLST	-	-

16.1.2 Application

The protection and control IEDs have many functions included . Self supervision with internal event list (SELFSUPEVLST) and internal error signals (INTERRSIG) function provide supervision of the IED. The fault signals make it easier to analyze and locate a fault.

Both hardware and software supervision is included and it is also possible to indicate possible faults through a hardware contact on the power supply module and/ or through the software communication.

Internal events are generated by the built-in supervisory functions. The supervisory functions supervise the status of the various modules in the IED and, in case of failure, a corresponding event is generated. Similarly, when the failure is corrected, a corresponding event is generated.

The event list is updated every 10s hence, an event will not be visible in the event list as soon as it is created.

Apart from the built-in supervision of the various modules, events are also generated when the status changes for the:

- built-in real time clock (in operation/out of order).
- external time synchronization (in operation/out of order).
- Change lock (on/off)

Events are also generated:

- whenever any setting in the IED is changed.

The internal events are time tagged with a resolution of 1 ms and stored in a list. The list can store up to 40 events. The list is based on the FIFO principle, that is, when it is full, the oldest event is overwritten. The list can be cleared via the local HMI .

The list of internal events provides valuable information, which can be used during commissioning and fault tracing.

16.2 Time synchronization

16.2.1 Identification

Function description	IEC 61850 identification	IEC 60617 identification	ANSI/IEEE C37.2 device number
Time synchronization	TIMESYNCHGEN	-	-

Function description	IEC 61850 identification	IEC 60617 identification	ANSI/IEEE C37.2 device number
Time system, summer time begins	DSTBEGIN	-	-

Function description	IEC 61850 identification	IEC 60617 identification	ANSI/IEEE C37.2 device number
Time system, summer time ends	DSTEND	-	-

Function description	IEC 61850 identification	IEC 60617 identification	ANSI/IEEE C37.2 device number
Time synchronization via IRIG-B	IRIG-B	-	-

Function description	IEC 61850 identification	IEC 60617 identification	ANSI/IEEE C37.2 device number
Time synchronization via SNTP	SNTP	-	-

Function description	IEC 61850 identification	IEC 60617 identification	ANSI/IEEE C37.2 device number
Time zone from UTC	TIMEZONE	-	-

16.2.2 Application

Use a common global source for example GPS time synchronization inside each substation as well as inside the area of the utility responsibility to achieve a

common time base for the IEDs in a protection and control system. This makes comparison and analysis of events and disturbance data between all IEDs in the power system possible.

Time-tagging of internal events and disturbances are an excellent help when evaluating faults. Without time synchronization, only the events within the IED can be compared to one another. With time synchronization, events and disturbances within the entire station, and even between line ends, can be compared during evaluation.

In the IED, the internal time can be synchronized from a number of sources:

- SNTP
- IRIG-B
- DNP
- IEC60870-5-103

Micro SCADA OPC server should not be used as a time synchronization source.

16.2.3 Setting guidelines

System time

The time is only possible to set inside the IED via the local HMI by navigating to **Configuration/Time/SYSTEMTIME** with year, month, day, hour, minute and second.

Synchronization

With external time synchronization the setting how to synchronize for the real-time clock (TIME) are set via local HMI or PCM600.

TimeSynch

The setting *TIMESYNCGEN* is used to set the source of the time synchronization. The setting alternatives are:

CoarseSyncSrc which can have the following values:

- *Off*
- *SNTP*
- *DNP*
- *IEC60870-5-103*

FineSyncSource which can have the following values:

- *Off*
- *SNTP*
- *IRIG-B*

The parameter *SyncMaster* defines if the IED is a master, or not a master for time synchronization in a system of IEDs connected in a communication network (IEC61850-8-1). The *SyncMaster* can have the following values:

- *Off*
- *SNTP -Server*

The time synchronization fine tunes the clock.

IEC 60870-5-103 time synchronization

An IED with IEC 60870-5-103 protocol can be used for time synchronization, but for accuracy reasons, it is not recommended. In some cases, however, this kind of synchronization is needed, for example, when no other synchronization is available.

First, set the IED to be synchronized via IEC 60870-5-103 either from **IED Configuration/Time/Synchronization/TIMESYNCHGEN:1** in PST or from the local HMI.

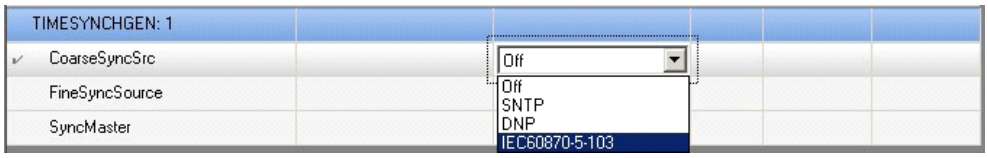

Figure 114: Settings under TIMESYNCHGEN:1 in PST

Only *CoarseSyncSrc* can be set to IEC 60870-5-103, not *FineSyncSource*.

After setting up the time synchronization source, the user must check and modify the IEC 60870-5-103 time synchronization specific settings, under: **IED Configuration/Communication/Station communication/IEC60870-5-103:1**.

- *MasterTimeDomain* specifies the format of the time sent by the master. Format can be:
  - Coordinated Universal Time (*UTC*)
  - Local time set in the master (*Local*)
  - Local time set in the master adjusted according to daylight saving time (*Local with DST*)
- *TimeSyncMode* specifies the time sent by the IED. The time synchronisation is done using the following ways:
  - *IEDTime*: The IED sends the messages with its own time.
  - *LinMasTime*: The IED measures the offset between its own time and the master time, and applies the same offset for the messages sent as in the

IEDTimeSkew. But in *LinMasTime* it applies the time changes occurred between two synchronised messages.
    - *IEDTimeSkew*: The IED measures the offset in between its own time and the master time and applies the same offset for the messages sent.
- *EvalTimeAccuracy* evaluates time accuracy for invalid time. Specifies the accuracy of the synchronization (5, 10, 20 or 40 ms). If the accuracy is less than the specified value, the “Bad Time” flag is raised. To accommodate those masters that are really bad in time sync, the *EvalTimeAccuracy* can be set to *Off*.

According to the standard, the “Bad Time” flag is reported when synchronization has been omitted in the protection for >23 h.

16.3 Parameter setting group handling

16.3.1 Identification

Function description	IEC 61850 identification	IEC 60617 identification	ANSI/IEEE C37.2 device number
Setting group handling	SETGRPS	-	-
Parameter setting groups	ACTVGRP	-	-

16.3.2 Application

Four different groups of settings are available to optimize IED operation for different power system conditions. By creating and switching between fine tuned setting sets, either from the local HMI or configurable binary inputs, results in a highly adaptable IED that can cope with a variety of power system scenarios.

Different conditions in networks with different voltage levels require highly adaptable protection and control IEDs to best provide for dependability, security and selectivity requirements. Protection IEDs operate with a higher degree of availability, especially, if the setting values of their parameters are continuously optimized according to the conditions in the power system.

Operational departments can plan for different operating conditions in the primary power system equipment. The protection engineer can prepare the necessary optimized and pre-tested settings in advance for different protection functions.

The four different groups of setting parameters are available in the IED. Any of them can be activated through different inputs by means of external programmable binary or internal control signals.

16.3.3 Setting guidelines

The setting *ActiveSetGrp*, is used to select which parameter group to be active. The active group can also be selected with configured input to the function block ACTVGRP.

The parameter *MaxNoSetGrp* defines the maximum number of setting groups in use to switch between. Only the selected number of setting groups will be available in the Parameter Setting tool (PST) for activation with the ACTVGRP function block.

16.4 Test mode functionality TESTMODE

16.4.1 Identification

Function description	IEC 61850 identification	IEC 60617 identification	ANSI/IEEE C37.2 device number
Test mode functionality	TESTMODE	-	-

16.4.2 Application

The protection and control IEDs may have a complex configuration with many included functions. To make the testing procedure easier, the IEDs include the feature that allows individual blocking of all functions except the function(s) the shall be tested.

This means that it is possible to see when a function is activated or trips. It also enables the user to follow the operation of several related functions to check correct functionality and to check parts of the configuration, and so on.

16.4.3 Setting guidelines

There are two possible ways to place the IED in the *TestMode= On*” state. This means that if the IED is set to normal operation (*TestMode = Off*), but the functions are still shown being in the test mode, the input signal INPUT on the TESTMODE function block must be activated in the configuration.

Forcing of binary output signals is only possible when the IED is in test mode.

16.5 Change lock CHNGLCK

16.5.1 Identification

Function description	IEC 61850 identification	IEC 60617 identification	ANSI/IEEE C37.2 device number
Change lock function	CHNGLCK	-	-

16.5.2 Application

Change lock function CHNGLCK is used to block further changes to the IED configuration once the commissioning is complete. The purpose is to make it impossible to perform inadvertent IED configuration and setting changes.

However, when activated, CHNGLCK will still allow the following actions that does not involve reconfiguring of the IED:

- Monitoring
- Reading events
- Resetting events
- Reading disturbance data
- Clear disturbances
- Reset LEDs
- Reset counters and other runtime component states
- Control operations
- Set system time
- Enter and exit from test mode
- Change of active setting group

The binary input controlling the function is defined in ACT or SMT. The CHNGLCK function is configured using ACT.

LOCK	Binary input signal that will activate/deactivate the function, defined in ACT or SMT.
ACTIVE	Output status signal
OVERRIDE	Set if function is overridden

When CHNGLCK has a logical one on its input, then all attempts to modify the IED configuration and setting will be denied and the message "Error: Changes blocked" will be displayed on the local HMI; in PCM600 the message will be "Operation denied by active ChangeLock". The CHNGLCK function should be configured so that it is controlled by a signal from a binary input card. This guarantees that by setting that signal to a logical zero, CHNGLCK is deactivated. If any logic is included in the signal path to the CHNGLCK input, that logic must be

designed so that it cannot permanently issue a logical one to the CHNGLCK input. If such a situation would occur in spite of these precautions, then please contact the local ABB representative for remedial action.

16.5.3 Setting guidelines

The Change lock function CHNGLCK does not have any parameters available in the local HMI or PCM600.

16.6 IED identifiers TERMINALID

16.6.1 Identification

Function description	IEC 61850 identification	IEC 60617 identification	ANSI/IEEE C37.2 device number
IED identifiers	TERMINALID	-	-

16.6.2 Application

16.6.2.1 Customer specific settings

The customer specific settings are used to give the IED a unique name and address. The settings are used by a central control system to communicate with the IED. The customer specific identifiers are found in the local HMI under **Configuration/ Power system/Identifiers/TERMINALID**

The settings can also be made from PCM600. For more information about the available identifiers, see the technical manual.

Use only characters A - Z, a - z and 0 - 9 in station, unit and object names.

16.7 Product information PRODINF

16.7.1 Identification

Function description	IEC 61850 identification	IEC 60617 identification	ANSI/IEEE C37.2 device number
Product information	PRODINF	-	-

16.7.2 Application

16.7.2.1 Factory defined settings

The factory defined settings are very useful for identifying a specific version and very helpful in the case of maintenance, repair, interchanging IEDs between different Substation Automation Systems and upgrading. The factory made settings can not be changed by the customer. They can only be viewed. The settings are found in the local HMI under **Main menu/Diagnostics/IED status/Product identifiers**

The following identifiers are available:

- IEDProdType
  - Describes the type of the IED (like REL, REC or RET). Example: *REL650*
- ProductVer
  - Describes the product version. Example: *1.2.3*

1	is the Major version of the manufactured product this means, new platform of the product
2	is the Minor version of the manufactured product this means, new functions or new hardware added to the product
3	is the Major revision of the manufactured product this means, functions or hardware is either changed or enhanced in the product

- ProductDef
  - Describes the release number, from the production. Example: *1.2.3.4* where;

1	is the Major version of the manufactured product this means, new platform of the product
2	is the Minor version of the manufactured product this means, new functions or new hardware added to the product
3	is the Major revision of the manufactured product this means, functions or hardware is either changed or enhanced in the product
4	is the Minor revision of the manufactured product this means, code is corrected in the product

- SerialNo: the structure of the SerialNo is as follows, for example, T0123456 where

01	is the last two digits in the year when the IED was manufactured that is, 2001
23	is the week number when the IED was manufactured
456	is the sequential number of the IEDs produced during the production week

- OrderingNo: the structure of the OrderingNo is as follows, for example, 1MRK008526-BA. This alphanumeric string has no specific meaning except, that it is used for internal identification purposes within ABB.
- ProductionDate: states the production date in the “YYYY-MM_DD” format.

16.8 Primary system values PRIMVAL

16.8.1 Identification

Function description	IEC 61850 identification	IEC 60617 identification	ANSI/IEEE C37.2 device number
Primary system values	PRIMVAL	-	-

16.8.2 Application

The rated system frequency and phasor rotation are set under **Main menu/ Configuration/ Power system/ Primary values/PRIMVAL** in the local HMI and PCM600 parameter setting tree.

16.9 Signal matrix for analog inputs SMAI

16.9.1 Identification

Function description	IEC 61850 identification	IEC 60617 identification	ANSI/IEEE C37.2 device number
Signal matrix for analog inputs	SMAI_20_x	-	-

16.9.2 Application

Signal matrix for analog inputs function (SMAI), also known as the preprocessor function, processes the analog signals connected to it and gives information about all aspects of the analog signals connected, like the RMS value, phase angle, frequency, harmonic content, sequence components and so on. This information is then used by the respective functions in ACT (for example protection, measurement or monitoring).

The SMAI function is used within PCM600 in direct relation with the Signal Matrix tool or the Application Configuration tool.

The SMAI function blocks for the 650 series of products are possible to set for two cycle times either 5 or 20ms. The function blocks connected to a SMAI function block shall always have the same cycle time as the SMAI block.

16.9.3 Setting guidelines

The parameters for the signal matrix for analog inputs (SMAI) functions are set via the local HMI or via the PCM600.

Every SMAI function block can receive four analog signals (three phases and one neutral value), either voltage or current. SMAI outputs give information about every aspect of the 3ph analog signals acquired (phase angle, RMS value, frequency and frequency derivates, and so on – 244 values in total). Besides the block “group name”, the analog inputs type (voltage or current) and the analog input names that can be set directly in ACT.

GlobalBaseSel: Selects the global base value group used by the function to define (*IBase*), (*UBase*) and (*SBase*).

DFTRefExtOut: Parameter valid only for function block SMAI_20_1:1, SMAI_20_1:2 and SMAI_80_1 .

These 3 SMAI blocks can be used as reference blocks for other SMAI blocks when the output signal SPFCOUT is used for relating other SMAI blocks to a common phase reference block for external output (SPFCOUT function output).

DFTReference: Reference DFT for the block.

These DFT reference block settings decide DFT reference for DFT calculations. The settings *InternalDFTRef* will use fixed DFT reference based on set system frequency. The setting *DFTRefGrpn* (where n is a number from 1 to 12) will use DFT reference from the selected group block numbered n, when own group selected adaptive DFT reference will be used based on calculated signal frequency from own group. The setting *ExternalDFTRef* will use reference based on what is connected to input DFTSPFC.

ConnectionType: Connection type for that specific instance (n) of the SMAI (if it is *Ph-N* or *Ph-Ph*). Depending on connection type setting the not connected *Ph-N* or *Ph-Ph* outputs will be calculated.

Negation: Negation means rotation with 180^0 of the vectors. If the user wants to negate the 3ph signal, it is possible to choose to negate only the phase signals *Negate3Ph*, only the neutral signal *NegateN* or both *Negate3Ph+N*.

MinValFreqMeas: The minimum value of the voltage for which the frequency is calculated, expressed as percent of the voltage in the selected Global Base voltage group (n) (for each instance 1<n<6).

Settings *DFTRefExtOut* and *DFTReference* shall be set to default value *InternalDFTRef* if no VT inputs are available.

Even if the user sets the *AnalogInputType* of a SMAI block to “*Current*”, the *MinValFreqMeas* is still visible. However, using the

current channel values as base for frequency measurement is **not recommendable** for a number of reasons, not last among them being the low level of currents that one can have in normal operating conditions.

Example of adaptive frequency tracking

Task time group 1	
SMAI instance	**3 phase group**
SMAI_20_1:1	1
SMAI_20_2:1	2
SMAI_20_3:1	3
SMAI_20_4:1	4
SMAI_20_5:1	5
SMAI_20_6:1	6
SMAI_20_7:1	7
SMAI_20_8:1	8
SMAI_20_9:1	9
SMAI_20_10:1	10
SMAI_20_11:1	11
SMAI_20_12:1	12

DFTRefGrp7

Task time group 2	
SMAI instance	**3 phase group**
SMAI_20_1:2	1
SMAI_20_2:2	2
SMAI_20_3:2	3
SMAI_20_4:2	4
SMAI_20_5:2	5
SMAI_20_6:2	6
SMAI_20_7:2	7
SMAI_20_8:2	8
SMAI_20_9:2	9
SMAI_20_10:2	10
SMAI_20_11:2	11
SMAI_20_12:2	12

IEC09000029_1_en.vsd

Figure 115: SMAI instances as organized in different task time groups and the corresponding parameter numbers

The example shows a situation with adaptive frequency tracking with one reference selected for all instances. In practice each instance can be adapted to the needs of the actual application.

Example 1

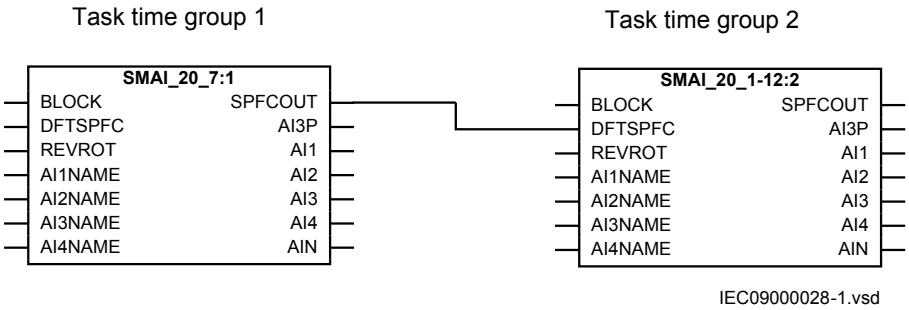

Figure 116: Configuration for using an instance in task time group 1 as DFT reference

Assume instance SMAI_20_7:1 in task time group 1 has been selected in the configuration to control the frequency tracking (For the SMAI_20_x task time groups). Observe that the selected reference instance (i.e. frequency tracking master) must be a voltage type. Observe that positive sequence voltage is used for the frequency tracking feature.

For task time group 1 this gives the following settings (see Figure 115 for numbering):

SMAI_20_7:1: *DFTRefExtOut = DFTRefGrp7* to route SMAI_20_7:1 reference to the SPFCOUT output, *DFTReference = DFTRefGrp7* for SMAI_20_7:1 to use SMAI_20_7:1 as reference (see Figure 116). .

SMAI_20_2:1 - SMAI_20_12:1 *DFTReference = DFTRefGrp7* for SMAI_20_2:1 - SMAI_20_12:1 to use SMAI_20_7:1 as reference.

For task time group 2 this gives the following settings:

SMAI_20_1:2 - SMAI_20_12:2 *DFTReference = ExternalDFTRef* to use DFTSPFC input as reference (SMAI_20_7:1)

16.10 Summation block 3 phase 3PHSUM

16.10.1 Identification

Function description	IEC 61850 identification	IEC 60617 identification	ANSI/IEEE C37.2 device number
Summation block 3 phase	3PHSUM	-	-

16.10.2 Application

Summation block 3 phase function 3PHSUM is used to get the sum of two sets of three-phase analog signals (of the same type) for those IED functions that might need it.

16.10.3 Setting guidelines

The summation block receives the three-phase signals from SMAI blocks. The summation block has several settings.

GlobalBaseSel: Selects the global base value group used by the function to define (*IBase*), (*UBase*) and (*SBase*).

SummationType: Summation type (*Group 1 + Group 2*, *Group 1 - Group 2*, *Group 2 - Group 1* or *–(Group 1 + Group 2)*).

DFTReference: The reference DFT block (*InternalDFT Ref*,*DFTRefGrp1* or *External DFT ref*) .

FreqMeasMinVal: The minimum value of the voltage for which the frequency is calculated, expressed as percent of *UBase* (for each instance x).

16.11 Global base values GBASVAL

16.11.1 Identification

Function description	IEC 61850 identification	IEC 60617 identification	ANSI/IEEE C37.2 device number
Global base values	GBASVAL	-	-

16.11.2 Application

Global base values function (GBASVAL) is used to provide global values, common for all applicable functions within the IED. One set of global values consists of values for current, voltage and apparent power and it is possible to have six different sets.

This is an advantage since all applicable functions in the IED use a single source of base values. This facilitates consistency throughout the IED and also facilitates a single point for updating values when necessary.

Each applicable function in the IED has a parameter, *GlobalBaseSel*, defining one out of the six sets of GBASVAL functions.

16.11.3 Setting guidelines

UBase: Phase-to-phase voltage value to be used as a base value for applicable functions throughout the IED.

IBase: Phase current value to be used as a base value for applicable functions throughout the IED.

SBase: Standard apparent power value to be used as a base value for applicable functions throughout the IED, typically $SBase=\sqrt{3}\cdot UBase\cdot IBase$.

16.12 Authority check ATHCHCK

16.12.1 Identification

Function description	IEC 61850 identification	IEC 60617 identification	ANSI/IEEE C37.2 device number
Authority check	ATHCHCK	-	-

16.12.2 Application

To safeguard the interests of our customers, both the IED and the tools that are accessing the IED are protected, by means of authorization handling. The authorization handling of the IED and the PCM600 is implemented at both access points to the IED:

- local, through the local HMI
- remote, through the communication ports

16.12.2.1 Authorization handling in the IED

At delivery the default user is the SuperUser. No Log on is required to operate the IED until a user has been created with the IED User Management..

Once a user is created and written to the IED, that user can perform a Log on, using the password assigned in the tool. Then the default user will be Guest.

If there is no user created, an attempt to log on will display a message box: “No user defined!”

If one user leaves the IED without logging off, then after the timeout (set in **Main menu/Configuration/HMI/Screen/1:SCREEN**) elapses, the IED returns to Guest state, when only reading is possible. By factory default, the display timeout is set to 60 minutes.

If one or more users are created with the IED User Management and written to the IED, then, when a user attempts a Log on by pressing the  key or when the user attempts to perform an operation that is password protected, the Log on window opens.

The cursor is focused on the User identity field, so upon pressing the key, one can change the user name, by browsing the list of users, with the “up” and “down” arrows. After choosing the right user name, the user must press the key again. When it comes to password, upon pressing the key, the following characters will show up: “********”. The user must scroll for every letter in the password. After all the letters are introduced (passwords are case sensitive) choose OK and press the key again.

At successful Log on, the local HMI shows the new user name in the status bar at the bottom of the LCD. If the Log on is OK, when required to change for example a password protected setting, the local HMI returns to the actual setting folder. If the Log on has failed, an "Error Access Denied" message opens. If a user enters an incorrect password three times, that user will be blocked for ten minutes before a new attempt to log in can be performed. The user will be blocked from logging in, both from the local HMI and PCM600. However, other users are to log in during this period.

16.13 Authority status ATHSTAT

16.13.1 Identification

Function description	IEC 61850 identification	IEC 60617 identification	ANSI/IEEE C37.2 device number
Authority status	ATHSTAT	-	-

16.13.2 Application

Authority status (ATHSTAT) function is an indication function block, which informs about two events related to the IED and the user authorization:

- the fact that at least one user has tried to log on wrongly into the IED and it was blocked (the output USRBLKED)
- the fact that at least one user is logged on (the output LOGGEDON)

The two outputs of ATHSTAT function can be used in the configuration for different indication and alarming reasons, or can be sent to the station control for the same purpose.

16.14 Denial of service

16.14.1 Identification

Function description	IEC 61850 identification	IEC 60617 identification	ANSI/IEEE C37.2 device number
Denial of service, frame rate control for front port	DOSFRNT	-	-

Function description	IEC 61850 identification	IEC 60617 identification	ANSI/IEEE C37.2 device number
Denial of service, frame rate control for LAN1 port	DOSLAN1	-	-

16.14.2 Application

The denial of service functions (DOSFRNT,DOSLAN1 and DOSSCKT) are designed to limit the CPU load that can be produced by Ethernet network traffic on the IED. The communication facilities must not be allowed to compromise the primary functionality of the device. All inbound network traffic will be quota controlled so that too heavy network loads can be controlled. Heavy network load might for instance be the result of malfunctioning equipment connected to the network.

DOSFRNT, DOSLAN1 and DOSSCKT measures the IED load from communication and, if necessary, limit it for not jeopardizing the IEDs control and protection functionality due to high CPU load. The function has the following outputs:

- LINKUP indicates the Ethernet link status
- WARNING indicates that communication (frame rate) is higher than normal
- ALARM indicates that the IED limits communication

16.14.3 Setting guidelines

The function does not have any parameters available in the local HMI or PCM600.

Section 17 Requirements

17.1 Current transformer requirements

The performance of a protection function will depend on the quality of the measured current signal. Saturation of the current transformer (CT) will cause distortion of the current signal and can result in a failure to operate or cause unwanted operations of some functions. Consequently CT saturation can have an influence on both the dependability and the security of the protection. This protection IED has been designed to permit heavy CT saturation with maintained correct operation.

17.1.1 Current transformer classification

To guarantee correct operation, the current transformers (CTs) must be able to correctly reproduce the current for a minimum time before the CT will begin to saturate. To fulfill the requirement on a specified time to saturation the CTs must fulfill the requirements of a minimum secondary e.m.f. that is specified below.

There are several different ways to specify CTs. Conventional magnetic core CTs are usually specified and manufactured according to some international or national standards, which specify different protection classes as well. There are many different standards and a lot of classes but fundamentally there are three different types of CTs:

- High remanence type CT
- Low remanence type CT
- Non remanence type CT

The high remanence type has no limit for the remanent flux. This CT has a magnetic core without any airgap and a remanent flux might remain almost infinite time. In this type of transformers the remanence can be up to around 80% of the saturation flux. Typical examples of high remanence type CT are class P, PX, TPS, TPX according to IEC, class P, X according to BS (old British Standard) and non gapped class C, K according to ANSI/IEEE.

The low remanence type has a specified limit for the remanent flux. This CT is made with a small air gap to reduce the remanence to a level that does not exceed 10% of the saturation flux. The small air gap has only very limited influences on the other properties of the CT. Class PR, TPY according to IEC are low remanence type CTs.

The non remanence type CT has practically negligible level of remanent flux. This type of CT has relatively big air gaps in order to reduce the remanence to practically zero level. In the same time, these air gaps reduce the influence of the DC-component from the primary fault current. The air gaps will also decrease the measuring accuracy in the non-saturated region of operation. Class TPZ according to IEC is a non remanence type CT.

Different standards and classes specify the saturation e.m.f. in different ways but it is possible to approximately compare values from different classes. The rated equivalent limiting secondary e.m.f. E_{al} according to the IEC 60044 – 6 standard is used to specify the CT requirements for the IED. The requirements are also specified according to other standards.

17.1.2 Conditions

The requirements are a result of investigations performed in our network simulator. The current transformer models are representative for current transformers of high remanence and low remanence type. The results may not always be valid for non remanence type CTs (TPZ).

The performances of the protection functions have been checked in the range from symmetrical to fully asymmetrical fault currents. Primary time constants of at least 120 ms have been considered at the tests. The current requirements below are thus applicable both for symmetrical and asymmetrical fault currents.

Depending on the protection function phase-to-earth, phase-to-phase and three-phase faults have been tested for different relevant fault positions for example, close in forward and reverse faults, zone 1 reach faults, internal and external faults. The dependability and security of the protection was verified by checking for example, time delays, unwanted operations, directionality, overreach and stability.

The remanence in the current transformer core can cause unwanted operations or minor additional time delays for some protection functions. As unwanted operations are not acceptable at all maximum remanence has been considered for fault cases critical for the security, for example, faults in reverse direction and external faults. Because of the almost negligible risk of additional time delays and the non-existent risk of failure to operate the remanence have not been considered for the dependability cases. The requirements below are therefore fully valid for all normal applications.

It is difficult to give general recommendations for additional margins for remanence to avoid the minor risk of an additional time delay. They depend on the performance and economy requirements. When current transformers of low remanence type (for example, TPY, PR) are used, normally no additional margin is needed. For current transformers of high remanence type (for example, P, PX, TPS, TPX) the small probability of fully asymmetrical faults, together with high remanence in the same direction as the flux generated by the fault, has to be kept in mind at the decision of an additional margin. Fully asymmetrical fault current will be achieved when the fault occurs at approximately zero voltage (0°).

Investigations have shown that 95% of the faults in the network will occur when the voltage is between 40° and 90°. In addition fully asymmetrical fault current will not exist in all phases at the same time.

17.1.3 Fault current

The current transformer requirements are based on the maximum fault current for faults in different positions. Maximum fault current will occur for three-phase faults or single phase-to-earth faults. The current for a single phase-to-earth fault will exceed the current for a three-phase fault when the zero sequence impedance in the total fault loop is less than the positive sequence impedance.

When calculating the current transformer requirements, maximum fault current for the relevant fault position should be used and therefore both fault types have to be considered.

17.1.4 Secondary wire resistance and additional load

The voltage at the current transformer secondary terminals directly affects the current transformer saturation. This voltage is developed in a loop containing the secondary wires and the burden of all relays in the circuit. For earth faults the loop includes the phase and neutral wire, normally twice the resistance of the single secondary wire. For three-phase faults the neutral current is zero and it is just necessary to consider the resistance up to the point where the phase wires are connected to the common neutral wire. The most common practice is to use four wires secondary cables so it normally is sufficient to consider just a single secondary wire for the three-phase case.

The conclusion is that the loop resistance, twice the resistance of the single secondary wire, must be used in the calculation for phase-to-earth faults and the phase resistance, the resistance of a single secondary wire, may normally be used in the calculation for three-phase faults.

As the burden can be considerable different for three-phase faults and phase-to-earth faults it is important to consider both cases. Even in a case where the phase-to-earth fault current is smaller than the three-phase fault current the phase-to-earth fault can be dimensioning for the CT depending on the higher burden.

In isolated or high impedance earthed systems the phase-to-earth fault is not the dimensioning case and therefore the resistance of the single secondary wire always can be used in the calculation, for this case.

17.1.5 General current transformer requirements

The current transformer ratio is mainly selected based on power system data for example, maximum load. However, it should be verified that the current to the protection is higher than the minimum operating value for all faults that are to be

detected with the selected CT ratio. The minimum operating current is different for different functions and normally settable so each function should be checked.

The current error of the current transformer can limit the possibility to use a very sensitive setting of a sensitive residual overcurrent protection. If a very sensitive setting of this function will be used it is recommended that the current transformer should have an accuracy class which have an current error at rated primary current that is less than ±1% (for example, 5P). If current transformers with less accuracy are used it is advisable to check the actual unwanted residual current during the commissioning.

17.1.6 Rated equivalent secondary e.m.f. requirements

With regard to saturation of the current transformer all current transformers of high remanence and low remanence type that fulfill the requirements on the rated equivalent secondary e.m.f. E_{al} below can be used. The characteristic of the non remanence type CT (TPZ) is not well defined as far as the phase angle error is concerned. If no explicit recommendation is given for a specific function we therefore recommend contacting ABB to confirm that the non remanence type can be used.

The CT requirements for the different functions below are specified as a rated equivalent limiting secondary e.m.f. E_{al} according to the IEC 60044-6 standard. Requirements for CTs specified in different ways are given at the end of this section.

17.1.6.1 Transformer differential protection

The current transformers must have a rated equivalent secondary e.m.f. E_{al} that is larger than the maximum of the required secondary e.m.f. E_{alreq} below:

$$E_{al} \geq E_{alreq} = 30 \cdot I_{nt} \cdot \frac{I_{sn}}{I_{pn}} \cdot \left(R_{CT} + R_L + \frac{S_R}{I_r^2} \right)$$

(Equation 99)

$$E_{al} \geq E_{alreq} = 2 \cdot I_{tf} \cdot \frac{I_{sn}}{I_{pn}} \cdot \left(R_{CT} + R_L + \frac{S_R}{I_r^2} \right)$$

(Equation 100)

where:

I_{nt}	The rated primary current of the power transformer (A)
I_{tf}	Maximum primary fundamental frequency current that passes two main CTs and the power transformer (A)
I_{pn}	The rated primary CT current (A)
I_{sn}	The rated secondary CT current (A)

Table continues on next page

I_r	The rated current of the protection IED (A)
R_{CT}	The secondary resistance of the CT (Ω)
R_L	The resistance of the secondary wire and additional load (Ω). The loop resistance containing the phase and neutral wires must be used for faults in solidly earthed systems. The resistance of a single secondary wire should be used for faults in high impedance earthed systems.
S_R	The burden of an IED current input channel (VA). S_R=0.010 VA/channel for I_r=1 A and S_r=0.250 VA/channel for I_r=5 A

In substations with breaker-and-a-half or double-busbar double-breaker arrangement, the fault current may pass two main CTs for the transformer differential protection without passing the power transformer. In such cases and if both main CTs have equal ratios and magnetization characteristics the CTs must satisfy equation 99 and equation 101.

$$E_{al} \geq E_{alreq} = I_f \cdot \frac{I_{sn}}{I_{pn}} \cdot \left(R_{CT} + R_L + \frac{S_R}{I_r^2} \right)$$

(Equation 101)

where:

I_f	Maximum primary fundamental frequency current that passes two main CTs without passing the power transformer (A)

17.1.6.2 1 Ph high impedance differential protection

The CTs connected to the IED must have a rated equivalent secondary e.m.f. E_{al} that is larger than or equal to the required equivalent secondary e.m.f. E_{alreq} below:

$$E_{al} \geq E_{alreq} = 2 \cdot U_s = 2 \cdot I_{tmax} \cdot \frac{I_{sn}}{I_{pn}} \cdot (R_{CT} + R_L)$$

where:

U_s	Set operate value to the voltage relay (V)
I_{kmax}	Maximum primary fundamental frequency fault current for through fault current for external faults (A)
I_{pn}	The rated primary CT current (A)
I_{sn}	The rated secondary CT current (A)
R_{CT}	The secondary resistance of the CT (Ω)
R_L	The resistance of the secondary cable from the CT up to a common junction point (Ω). The loop resistance containing the phase and neutral wires, must be used for faults in solidly earthed systems and the resistance of a single-phase wire should be used for faults in high impedance earthed systems.

All CTs to the same protection should have identical turn ratios. Consequently auxiliary CTs cannot normally be used. The IED must be provided with separate cores.

17.1.6.3 Breaker failure protection

The CTs must have a rated equivalent secondary e.m.f. E_{al} that is larger than or equal to the required secondary e.m.f. E_{alreq} below:

$$E_{al} \geq E_{alreq} = 5 \cdot I_{op} \cdot \frac{I_{sn}}{I_{pn}} \cdot \left(R_{CT} + R_L + \frac{S_R}{I_r^2} \right)$$

(Equation 103)

where:

I_{op}	The primary operate value (A)
I_{pn}	The rated primary CT current (A)
I_{sn}	The rated secondary CT current (A)
I_r	The rated current of the protection IED (A)
R_{CT}	The secondary resistance of the CT (Ω)
R_L	The resistance of the secondary cable and additional load (Ω). The loop resistance containing the phase and neutral wires, must be used for faults in solidly earthed systems. The resistance of a single secondary wire should be used for faults in high impedance earthed systems.
S_R	The burden of an IED current input channel (VA). S_R=0.010 VA/channel for I_r=1 A and S_R=0.250 VA/channel for I_r=5 A

17.1.6.4 Non-directional instantaneous and definitive time, phase and residual overcurrent protection

The CTs must have a rated equivalent secondary e.m.f. E_{al} that is larger than or equal to the required secondary e.m.f. E_{alreq} below:

$$E_{al} \geq E_{alreq} = 1,5 \cdot I_{op} \cdot \frac{I_{sn}}{I_{pn}} \cdot \left(R_{CT} + R_L + \frac{S_R}{I_r^2} \right)$$

(Equation 104)

where:

I_{op}	The primary operate value (A)
I_{pn}	The rated primary CT current (A)
I_{sn}	The rated secondary CT current (A)
I_r	The rated current of the protection IED (A)
R_{CT}	The secondary resistance of the CT (Ω)
R_L	The resistance of the secondary cable and additional load (Ω). The loop resistance containing the phase and neutral wires, must be used for faults in solidly earthed systems. The resistance of a single secondary wire should be used for faults in high impedance earthed systems.
S_R	The burden of an IED current input channel (VA). S_R=0.010 VA/channel for I_r=1 A and S_R=0.250 VA/channel for I_r=5 A

17.1.6.5 Non-directional inverse time delayed phase and residual overcurrent protection

The requirement according to Equation 105 and Equation 106 does not need to be fulfilled if the high set instantaneous or definitive time stage is used. In this case Equation 104 is the only necessary requirement.

If the inverse time delayed function is the only used overcurrent protection function the CTs must have a rated equivalent secondary e.m.f. E_{al} that is larger than or equal to the required secondary e.m.f. E_{alreq} below:

$$E_{al} \geq E_{alreq} = 20 \cdot I_{op} \cdot \frac{I_{sn}}{I_{pn}} \cdot \left(R_{CT} + R_L + \frac{S_R}{I_r^2} \right)$$

(Equation 105)

where

I_{op}	The primary current set value of the inverse time function (A)
I_{pn}	The rated primary CT current (A)
I_{sn}	The rated secondary CT current (A)
I_r	The rated current of the protection IED (A)

Table continues on next page

R_{CT}	The secondary resistance of the CT (Ω)
R_L	The resistance of the secondary cable and additional load (Ω). The loop resistance containing the phase and neutral wires, must be used for faults in solidly earthed systems. The resistance of a single secondary wire should be used for faults in high impedance earthed systems.
S_R	The burden of an IED current input channel (VA). S_R=0.010 VA/channel for I_r=1 A and S_R=0.250 VA/channel for I_r=5 A

Independent of the value of I_{op} the maximum required E_{al} is specified according to the following:

$$E_{al} \geq E_{alreq\,max} = I_{k\,max} \cdot \frac{I_{sn}}{I_{pn}} \cdot \left(R_{CT} + R_L + \frac{S_R}{I_r^2} \right)$$

(Equation 106)

where

I_{kmax}	Maximum primary fundamental frequency current for close-in faults (A)

17.1.6.6 Directional phase and residual overcurrent protection

If the directional overcurrent function is used the CTs must have a rated equivalent secondary e.m.f. E_{al} that is larger than or equal to the required equivalent secondary e.m.f. E_{alreq} below:

$$E_{al} \geq E_{alreq} = I_{k\,max} \cdot \frac{I_{sn}}{I_{pn}} \cdot \left(R_{CT} + R_L + \frac{S_R}{I_r^2} \right)$$

(Equation 107)

where:

I_{kmax}	Maximum primary fundamental frequency current for close-in forward and reverse faults (A)
I_{pn}	The rated primary CT current (A)
I_{sn}	The rated secondary CT current (A)
I_r	The rated current of the protection IED (A)
R_{CT}	The secondary resistance of the CT (Ω)
R_L	The resistance of the secondary cable and additional load (Ω). The loop resistance containing the phase and neutral wires, must be used for faults in solidly earthed systems. The resistance of a single secondary wire should be used for faults in high impedance earthed systems.
S_R	The burden of an IED current input channel (VA). S_r=0.010 VA/channel for I_r=1 A and S_r=0.250 VA/channel for I_r=5 A

17.1.7 Current transformer requirements for CTs according to other standards

All kinds of conventional magnetic core CTs are possible to use with the IEDs if they fulfill the requirements corresponding to the above specified expressed as the rated equivalent secondary e.m.f. E_{al} according to the IEC 60044-6 standard. From different standards and available data for relaying applications it is possible to approximately calculate a secondary e.m.f. of the CT comparable with E_{al}. By comparing this with the required secondary e.m.f. E_{alreq} it is possible to judge if the CT fulfills the requirements. The requirements according to some other standards are specified below.

17.1.7.1 Current transformers according to IEC 60044-1, class P, PR

A CT according to IEC 60044-1 is specified by the secondary limiting e.m.f. E_{2max}. The value of the E_{2max} is approximately equal to the corresponding E_{al} according to IEC 60044-6. Therefore, the CTs according to class P and PR must have a secondary limiting e.m.f. E_{2max} that fulfills the following:

$$E_{2\max} > \max E_{alreq}$$

(Equation 108)

17.1.7.2 Current transformers according to IEC 60044-1, class PX, IEC 60044-6, class TPS (and old British Standard, class X)

CTs according to these classes are specified approximately in the same way by a rated knee-point e.m.f. E_{knee} (E_k for class PX, E_{kneeBS} for class X and the limiting secondary voltage U_{al} for TPS). The value of the E_{knee} is lower than the corresponding E_{al} according to IEC 60044-6. It is not possible to give a general relation between the E_{knee} and the E_{al} but normally the E_{knee} is approximately 80 % of the E_{al}. Therefore, the CTs according to class PX, X and TPS must have a rated knee-point e.m.f. E_{knee} that fulfills the following:

$$E_{knee} \approx E_k \approx E_{kneeBS} \approx U_{al} > 0.8 \cdot (\text{maximum of } E_{alreq})$$

(Equation 109)

17.1.7.3 Current transformers according to ANSI/IEEE

Current transformers according to ANSI/IEEE are partly specified in different ways. A rated secondary terminal voltage U_{ANSI} is specified for a CT of class C.

U_{ANSI} is the secondary terminal voltage the CT will deliver to a standard burden at 20 times rated secondary current without exceeding 10 % ratio correction. There are a number of standardized U_{ANSI} values for example, U_{ANSI} is 400 V for a C400 CT. A corresponding rated equivalent limiting secondary e.m.f. E_{alANSI} can be estimated as follows:

$$E_{alANSI} = |20 \cdot I_{sn} \cdot R_{CT} + U_{ANSI}| = |20 \cdot I_{sn} \cdot R_{CT} + 20 \cdot I_{sn} \cdot Z_{bANSI}|$$

(Equation 110)

where:

Z_{bANSI} The impedance (that is, complex quantity) of the standard ANSI burden for the specific C class (Ω)

U_{ANSI} The secondary terminal voltage for the specific C class (V)

The CTs according to class C must have a calculated rated equivalent limiting secondary e.m.f. E_{alANSI} that fulfills the following:

$$E_{alANSI} > \text{maximum of } E_{alreq}$$

(Equation 111)

A CT according to ANSI/IEEE is also specified by the knee-point voltage $U_{kneeANSI}$ that is graphically defined from an excitation curve. The knee-point voltage $U_{kneeANSI}$ normally has a lower value than the knee-point e.m.f. according to IEC and BS. $U_{kneeANSI}$ can approximately be estimated to 75 % of the corresponding E_{al} according to IEC 60044 6. Therefore, the CTs according to ANSI/IEEE must have a knee-point voltage $U_{kneeANSI}$ that fulfills the following:

$$E_{kneeANSI} > 0.75 \cdot (\text{maximum of } E_{alreq})$$

(Equation 112)

17.2 Voltage transformer requirements

The performance of a protection function will depend on the quality of the measured input signal. Transients caused by capacitive voltage transformers (CVTs) can affect some protection functions.

Magnetic or capacitive voltage transformers can be used.

The capacitive voltage transformers (CVTs) should fulfill the requirements according to the IEC 60044–5 standard regarding ferro-resonance and transients. The ferro-resonance requirements of the CVTs are specified in chapter 7.4 of the standard.

The transient responses for three different standard transient response classes, T1, T2 and T3 are specified in chapter 15.5 of the standard. CVTs according to all classes can be used.

The protection IED has effective filters for these transients, which gives secure and correct operation with CVTs.

17.3 SNTP server requirements

17.3.1 SNTP server requirements

The SNTP server to be used is connected to the local network, that is not more than 4-5 switches or routers away from the IED. The SNTP server is dedicated for its task, or at least equipped with a real-time operating system, that is not a PC with SNTP server software. The SNTP server should be stable, that is, either synchronized from a stable source like GPS, or local without synchronization. Using a local SNTP server without synchronization as primary or secondary server in a redundant configuration is not recommended.

Section 18 Glossary

AC	Alternating current
ACT	Application configuration tool within PCM600
A/D converter	Analog-to-digital converter
ADBS	Amplitude deadband supervision
AI	Analog input
ANSI	American National Standards Institute
AR	Autoreclosing
ASCT	Auxiliary summation current transformer
ASD	Adaptive signal detection
AWG	American Wire Gauge standard
BI	Binary input
BOS	Binary outputs status
BR	External bistable relay
BS	British Standards
CAN	Controller Area Network. ISO standard (ISO 11898) for serial communication
CB	Circuit breaker
CCITT	Consultative Committee for International Telegraph and Telephony. A United Nations-sponsored standards body within the International Telecommunications Union.
CCVT	Capacitive Coupled Voltage Transformer
Class C	Protection Current Transformer class as per IEEE/ ANSI
CMPPS	Combined megapulses per second
CMT	Communication Management tool in PCM600
CO cycle	Close-open cycle
Codirectional	Way of transmitting G.703 over a balanced line. Involves two twisted pairs making it possible to transmit information in both directions
COMTRADE	Standard format according to IEC 60255-24
Contra-directional	Way of transmitting G.703 over a balanced line. Involves four twisted pairs, two of which are used for transmitting data in both directions and two for transmitting clock signals

CPU	Central processor unit
CR	Carrier receive
CRC	Cyclic redundancy check
CROB	Control relay output block
CS	Carrier send
CT	Current transformer
CVT	Capacitive voltage transformer
DAR	Delayed autoreclosing
DARPA	Defense Advanced Research Projects Agency (The US developer of the TCP/IP protocol etc.)
DBDL	Dead bus dead line
DBLL	Dead bus live line
DC	Direct current
DFC	Data flow control
DFT	Discrete Fourier transform
DHCP	Dynamic Host Configuration Protocol
DIP-switch	Small switch mounted on a printed circuit board
DI	Digital input
DLLB	Dead line live bus
DNP	Distributed Network Protocol as per IEEE/ANSI Std. 1379-2000
DR	Disturbance recorder
DRAM	Dynamic random access memory
DRH	Disturbance report handler
DSP	Digital signal processor
DTT	Direct transfer trip scheme
EHV network	Extra high voltage network
EIA	Electronic Industries Association
EMC	Electromagnetic compatibility
EMF	(Electric Motive Force)
EMI	Electromagnetic interference
EnFP	End fault protection
EPA	Enhanced performance architecture
ESD	Electrostatic discharge
FCB	Flow control bit; Frame count bit

FOX 20	Modular 20 channel telecommunication system for speech, data and protection signals
FOX 512/515	Access multiplexer
FOX 6Plus	Compact time-division multiplexer for the transmission of up to seven duplex channels of digital data over optical fibers
G.703	Electrical and functional description for digital lines used by local telephone companies. Can be transported over balanced and unbalanced lines
GCM	Communication interface module with carrier of GPS receiver module
GDE	Graphical display editor within PCM600
GI	General interrogation command
GIS	Gas-insulated switchgear
GOOSE	Generic object-oriented substation event
GPS	Global positioning system
HDLC protocol	High-level data link control, protocol based on the HDLC standard
HFBR connector type	Plastic fiber connector
HMI	Human-machine interface
HSAR	High speed autoreclosing
HV	High-voltage
HVDC	High-voltage direct current
IDBS	Integrating deadband supervision
IEC	International Electrical Committee
IEC 60044-6	IEC Standard, Instrument transformers – Part 6: Requirements for protective current transformers for transient performance
IEC 61850	Substation automation communication standard
IEC 61850–8–1	Communication protocol standard
IEEE	Institute of Electrical and Electronics Engineers
IEEE 802.12	A network technology standard that provides 100 Mbits/s on twisted-pair or optical fiber cable
IEEE P1386.1	PCI Mezzanine Card (PMC) standard for local bus modules. References the CMC (IEEE P1386, also known as Common Mezzanine Card) standard for the mechanics and the PCI specifications from the PCI SIG (Special Interest Group) for the electrical EMF (Electromotive force).

IEEE 1686	Standard for Substation Intelligent Electronic Devices (IEDs) Cyber Security Capabilities
IED	Intelligent electronic device
I-GIS	Intelligent gas-insulated switchgear
Instance	When several occurrences of the same function are available in the IED, they are referred to as instances of that function. One instance of a function is identical to another of the same kind but has a different number in the IED user interfaces. The word "instance" is sometimes defined as an item of information that is representative of a type. In the same way an instance of a function in the IED is representative of a type of function.
IP	1. Internet protocol. The network layer for the TCP/IP protocol suite widely used on Ethernet networks. IP is a connectionless, best-effort packet-switching protocol. It provides packet routing, fragmentation and reassembly through the data link layer. 2. Ingression protection, according to IEC standard
IP 20	Ingression protection, according to IEC standard, level 20
IP 40	Ingression protection, according to IEC standard, level 40
IP 54	Ingression protection, according to IEC standard, level 54
IRF	Internal failure signal
IRIG-B:	InterRange Instrumentation Group Time code format B, standard 200
ITU	International Telecommunications Union
LAN	Local area network
LIB 520	High-voltage software module
LCD	Liquid crystal display
LDD	Local detection device
LED	Light-emitting diode
MCB	Miniature circuit breaker
MCM	Mezzanine carrier module
MVB	Multifunction vehicle bus. Standardized serial bus originally developed for use in trains.
NCC	National Control Centre
OCO cycle	Open-close-open cycle
OCP	Overcurrent protection
OLTC	On-load tap changer
OV	Over-voltage

Overreach	A term used to describe how the relay behaves during a fault condition. For example, a distance relay is overreaching when the impedance presented to it is smaller than the apparent impedance to the fault applied to the balance point, that is, the set reach. The relay “sees” the fault but perhaps it should not have seen it.
PCI	Peripheral component interconnect, a local data bus
PCM	Pulse code modulation
PCM600	Protection and control IED manager
PC-MIP	Mezzanine card standard
PMC	PCI Mezzanine card
POR	Permissive overreach
POTT	Permissive overreach transfer trip
Process bus	Bus or LAN used at the process level, that is, in near proximity to the measured and/or controlled components
PSM	Power supply module
PST	Parameter setting tool within PCM600
PT ratio	Potential transformer or voltage transformer ratio
PUTT	Permissive underreach transfer trip
RASC	Synchrocheck relay, COMBIFLEX
RCA	Relay characteristic angle
RFPP	Resistance for phase-to-phase faults
RFPE	Resistance for phase-to-earth faults
RISC	Reduced instruction set computer
RMS value	Root mean square value
RS422	A balanced serial interface for the transmission of digital data in point-to-point connections
RS485	Serial link according to EIA standard RS485
RTC	Real-time clock
RTU	Remote terminal unit
SA	Substation Automation
SBO	Select-before-operate
SC	Switch or push button to close
SCS	Station control system
SCADA	Supervision, control and data acquisition
SCT	System configuration tool according to standard IEC 61850

SDU	Service data unit
SMA connector	Subminiature version A, A threaded connector with constant impedance.
SMT	Signal matrix tool within PCM600
SMS	Station monitoring system
SNTP	Simple network time protocol – is used to synchronize computer clocks on local area networks. This reduces the requirement to have accurate hardware clocks in every embedded system in a network. Each embedded node can instead synchronize with a remote clock, providing the required accuracy.
SRY	Switch for CB ready condition
ST	Switch or push button to trip
Starpoint	Neutral point of transformer or generator
SVC	Static VAr compensation
TC	Trip coil
TCS	Trip circuit supervision
TCP	Transmission control protocol. The most common transport layer protocol used on Ethernet and the Internet.
TCP/IP	Transmission control protocol over Internet Protocol. The de facto standard Ethernet protocols incorporated into 4.2BSD Unix. TCP/IP was developed by DARPA for Internet working and encompasses both network layer and transport layer protocols. While TCP and IP specify two protocols at specific protocol layers, TCP/IP is often used to refer to the entire US Department of Defense protocol suite based upon these, including Telnet, FTP, UDP and RDP.
TNC connector	Threaded Neill-Concelman, a threaded constant impedance version of a BNC connector
TPZ, TPY, TPX, TPS	Current transformer class according to IEC
UMT	User management tool
Underreach	A term used to describe how the relay behaves during a fault condition. For example, a distance relay is underreaching when the impedance presented to it is greater than the apparent impedance to the fault applied to the balance point, that is, the set reach. The relay does not “see” the fault but perhaps it should have seen it. See also Overreach.
UTC	Coordinated Universal Time. A coordinated time scale, maintained by the Bureau International des Poids et Mesures (BIPM), which forms the basis of a coordinated dissemination of standard frequencies and time signals. UTC

	is derived from International Atomic Time (TAI) by the addition of a whole number of "leap seconds" to synchronize it with Universal Time 1 (UT1), thus allowing for the eccentricity of the Earth's orbit, the rotational axis tilt (23.5 degrees), but still showing the Earth's irregular rotation, on which UT1 is based. The Coordinated Universal Time is expressed using a 24-hour clock, and uses the Gregorian calendar. It is used for aeroplane and ship navigation, where it is also sometimes known by the military name, "Zulu time." "Zulu" in the phonetic alphabet stands for "Z", which stands for longitude zero.
UV	Undervoltage
WEI	Weak end infeed logic
VT	Voltage transformer
X.21	A digital signalling interface primarily used for telecom equipment
$3I_O$	Three times zero-sequence current. Often referred to as the residual or the earth-fault current
$3U_O$	Three times the zero sequence voltage. Often referred to as the residual voltage or the neutral point voltage

Contact us

ABB AB
Substation Automation Products
SE-721 59 Västerås, Sweden
Phone +46 (0) 21 32 50 00
Fax +46 (0) 21 14 69 18

www.abb.com/substationautomation

Power and productivity
for a better world™