COM581

1MRB520267-Uen
Edition July 2006

Gateway

Operating Instructions

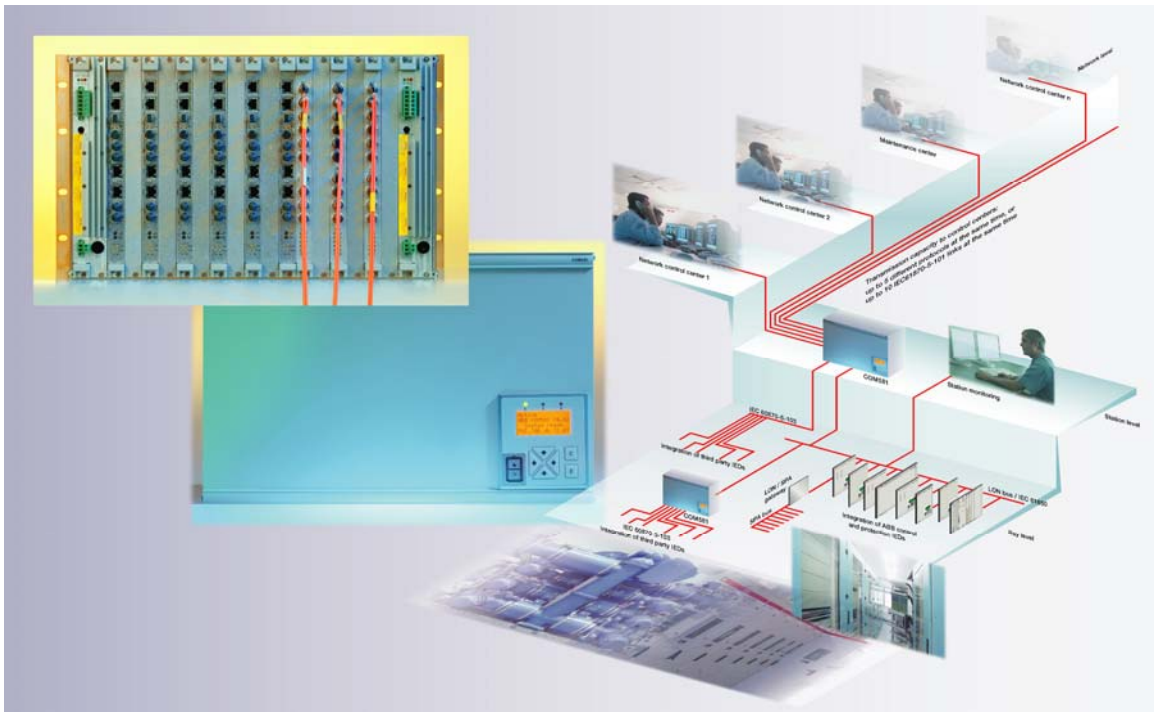

© 2001 ABB Switzerland Ltd
Baden/Switzerland

5th Edition

Applies for software version V6.2

All rights with respect to this document, including applications for patent and registration of other industrial property rights, are reserved. Unauthorised use, in particular reproduction or making available to third parties without our explicit consent in writing is prohibited.
The use is only allowed for the purpose laid down in the contract.

This document has been carefully prepared and reviewed. Should in spite of this the reader find an error, he is requested to inform us at his earliest convenience.

The data contained herein purport solely to describe the product and are not a warranty of performance or characteristic. It is with the best interest of our customers in mind that we constantly strive to improve our products and keep them abreast of advances in technology. This may, however, lead to discrepancies between a product and its “Technical Description” or “Operating Instructions”.

Contents

1. INTRODUCTION

1.1. COM581

The gateway COM581 is used to link a substation automation system to a control system at a higher level, bay control units to the substation automation system and protection and metering devices to bay control units. It is a component of the ABB station automation system and is based on robust industrial hardware rather than PC technology.
The unit's modular design enables it to be configured to fulfil the communication requirements of a particular application (physical interfaces, protocols etc.). A parallel processing architecture capable of multiple protocol processing was chosen.

1.2. Application

Figure 1.1 and Figure 1.2 show examples of integrating COM581 in a control system.

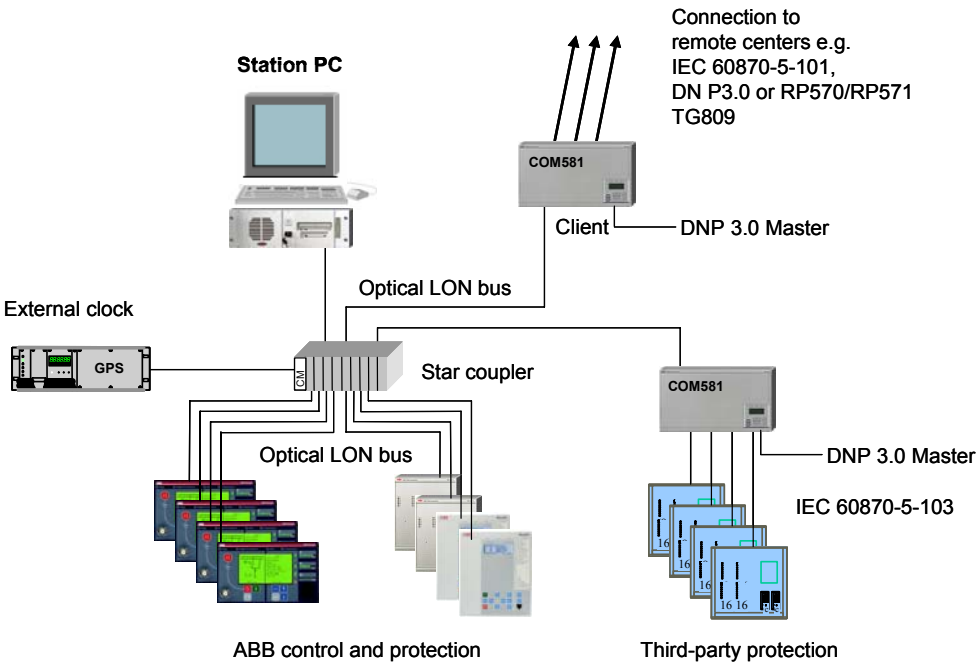

Figure 1.1 Integration of bay units in the general layout via LON bus

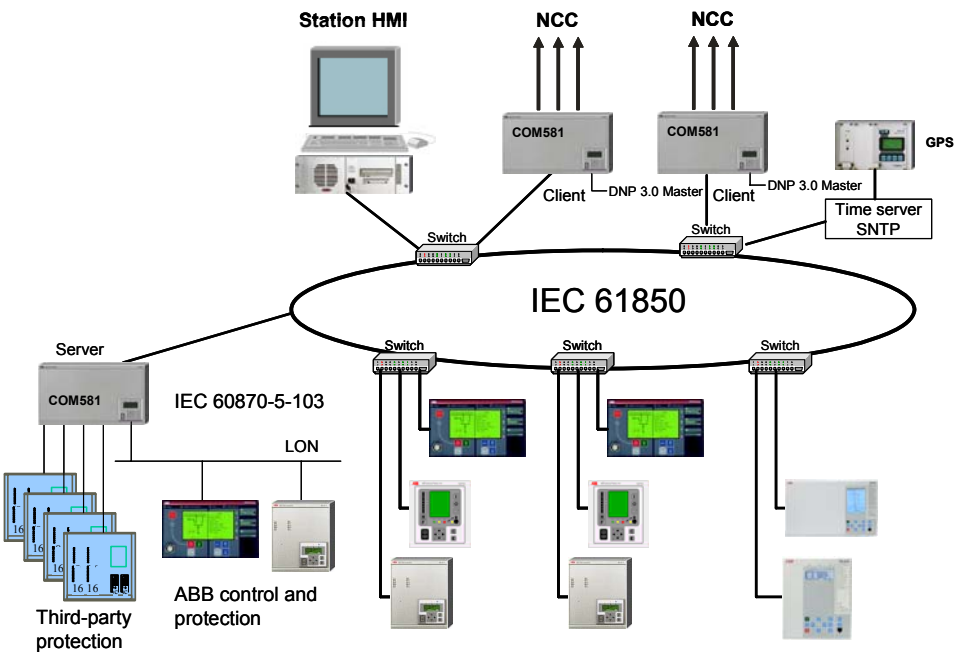

Figure 1.2 Integration of bay units in the general layout via IEC 61850

The following protocols are provided:

- IEC101 Slave
- IEC104 Slave
- DNP 3.0 Slave
- RP571/570 Slave
- TG809 Slave (planned)
- LON Client, Server
- IEC103 Master
- ACP Client, Server (planned)
- IEC61850 client
- IEC61850 server/proxy (planned)

1.3. Warranty conditions

The warranty conditions are defined in the supply contract.

The manufacturers accept no responsibility for any damage resulting from improper use of the gateway COM581.

Special agreements are only valid if they are included in the contract.

1.4. Using these operating instructions

These Operating Instructions for the gateway COM581 cover the necessary information about the device from delivery to ultimate disposal. It therefore contains the information the various user groups need to know. Sections 1 to 12 do not apply to all of them and do not all have to be read by every user (see Table 1.1)

All the user groups on the other hand must observe the safety instructions given in Section 2. The operating conditions and restrictions for particular protocol releases are listed in Section 12.

These Operating Instructions are intended to be use by the following target groups:

- **Systems engineers** who design the system and define the communication within the confines of the plant.
- **Erection personnel** responsible for installing and wiring the equipment.
- **Commissioning personnel** responsible for setting, configuring and testing the equipment on site.
- **Operating and maintenance personnel** who supervise the equipment in operation, take action in response to displays and signals and carry out maintenance on the equipment.

Section	**Systems engineers**	**Erection personnel**	**Commissioning personnel**	**Operating/ Maintenance personnel**
1	x	x	x	x
2	x	x	x	x
3	x	x	x	x
4	x		x	x
5	x			x
6		x		
7			x	x
8	x		x	x
9	x		x	x
10		x		
11	x	x	x	x
12	x	x	x	x

Table 1.1 Target groups for these Operating Instructions

2. SAFETY INSTRUCTIONS

2.1. Safety instruction flags

Safety instructions in these Operating Instructions are marked as follows:

DANGER: Instructions, restrictions and forbidden operations intended to prevent serious injury to persons or damage to plant.

WARNING: Instructions, restrictions and forbidden operations intended to prevent less serious damage.

NOTICE: Special instructions for making the best possible use of the device.

2.2. General rule

The gateway COM581 may only be operated while in perfect working order and in strict accordance with the Operating Instructions. There may be a risk of damage if it is improperly applied.

2.3. General safety instructions

Safety at work regulations (company, regional and national) must be strictly observed.

Take careful note of the details given in Section 3.2 “COM581 Data Sheet”.

Heed all warning labels and signs on the device and in these Operating Instructions and all instructions regarding its operation.

The device must not be modified or changed in any way. Any work inside the device must be performed by ABB personnel. The device may only be handled by appropriately authorized personnel. The operating personnel must be appropriately qualified to operate and handle the device and be authorised to use or work on COM581 (e.g. authorised to operate switchgear).

Only ABB personnel are authorised to change the configuration of the COM581. To avoid infringing the warranty, the user should only make changes to the configuration after consultation with the ABB company supplying the device.

The COM581 is designed for installation in an electronic equipment cubicle and may only be operated otherwise under electronically “clean” workshop conditions.

Be sure to take the usual precautions to guard against electrostatic discharge.

Do not install the COM581 close to a source of heat, e.g. a radiator, or near other equipment that dissipates heat (e.g. an amplifier).

Do not operate the COM581 close to water.

Be sure not to obstruct any openings in the COM581. Their purpose is to ventilate the device or equipment and they are necessary for its reliable operation.

Strictly observe local and national safety regulations and the safety instructions in these Operating Instructions during installation and commissioning of the COM581.

Should COM581 components need to be replaced, be sure to only use spares, which are approved by the manufacturer. There is a risk of fire, short-circuit, electrical shock etc., if non-approved spares are used.

After switching the device or equipment off, wait until the internal components have cooled down before fitting accessories or ancillary units.

Always test the COM581 or equipment to make sure that it functions properly after performing maintenance work on it.

Carefully read the Operating Instructions.

2.3.1. Instructions for the specific product

Take note of the details given in the Data Sheet for the gateway COM581.

Units and modules may only be replaced while the device or equipment is isolated from the supply and only by correspondingly qualified personnel. Be sure to take all the usual precautions to guard against electrostatic discharge.

WARNING: Industry packs may only be replaced or the positions of rotary switches changed on a workbench appropriately designed for working on electronic equipment.

The COM581 boards, bus backplanes and display units are sensitive to electrostatic discharge when not in the unit's housing. The basic precautions to guard against electrostatic discharge are as follows:

- If modules have to be removed from COM581 units installed in a grounded cubicle in an HV switchgear installation, discharge yourself by touching station ground (the cubicle) beforehand.
- Only hold electronic boards at the edges, taking care not to touch the components.
- Only work on units that have been removed from the cubicle on a workbench designed for electronic equipment and wear a grounded wristband.
- Always store and ship electronic units in their original packing. Place electronic parts in electrostatically screened packing materials.

WARNING: Only insert or withdraw the power supply unit while the supply is switched off. To this end, place the switch on the power supply unit in the off position and withdraw the green plug on the supply cable. It is not sufficient simply to turn the supply off at the switch.

Only insert or withdraw the other units, while the power supply unit 500PSM03 is switched off.

DANGER: After replacing units, be sure to check that the same configuration is loaded as before the replacement. If this is not the case, there is a danger of the device being damaged, unintended operation of switchgear taking place or of interlocks functioning incorrectly. Persons may also be in danger.

DANGER: If incorrect data are downloaded to the device, it will not function correctly and may issue the wrong commands to the switchgear and thereby endanger persons and cause damage to the plant.

3. HARDWARE CONFIGURATION, FUNCTION AND TECHNICAL SPECIFICATION OF THE COM581

3.1. Hardware configuration

3.1.1. Frontplate control and display unit (local HMI)

To connect the control and display unit to the backplane bus (500CUB03), plug the red coded 12 pin connector on the ribbon cable into the rear of the unit and the red connector at the other end into the 14 pin connector on the backplane bus with the red core on the left. Figure 3.1 shows the component side of the backplane bus and the connector on the lower left of the rear of the control and display unit. The control and display unit is inserted in Slot 3. The connector for the control and display unit on the backplane bus is horizontal.
Do not forget to ground the local HMI to the backplane bus board 500CUB03.

Frontplate unit (Assembly side)

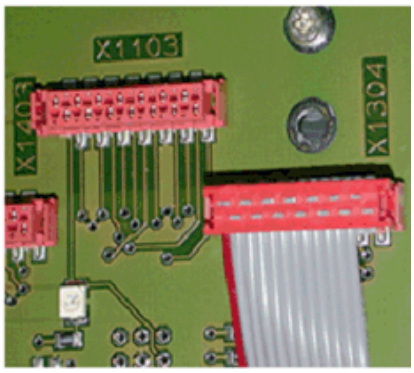

Backplane bus

Figure 3.1 Ribbon connecting cable for the control and display unit (local HMI)

The connection between the PC and the local HMI can be achieved by an electric-to-optical connection cable.

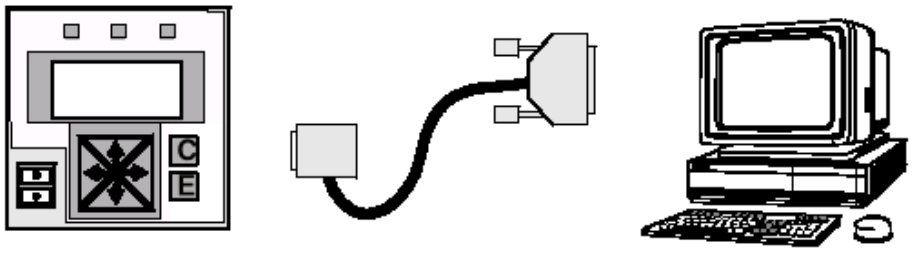

Figure 3.2 Frontplate control and display unit (local HMI)

3.1.2. Basic COM581 enclosure

The basic enclosure for the COM581 is an electronic equipment rack (see Figure 3.3) with an adequate number of slots for the 500CIM06 boards, power supply units and star- coupler boards. The basic rack is equipped with a backplane 500CUB03.

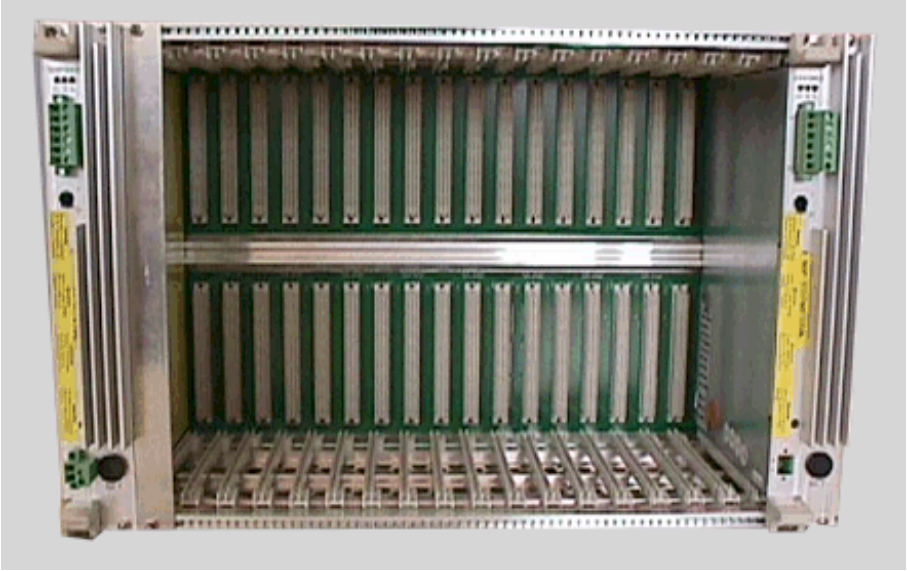

Figure 3.3 COM581 rack and backplane for a redundant power supply

The backplane conforms to the VME bus standard and provides 10 backplane lines (1A, 1B, ... to 5B) for distributing signals within the enclosure.

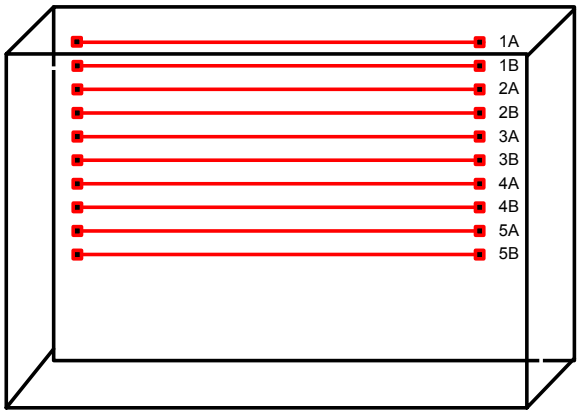

Figure 3.4 Signal distribution lines on the 500CUB03 back-plane

NOTICE: The allocation of the backplane lines is configured either using the CAP581 database or the mini-switches on the star-coupler boards.

Backplane features:

- Redundant parallel power supplies provided by two PSM03 units via a load-balancing circuit
- Up to nine CPU boards (500CIM06)
- Local HMI connector

3.1.2.1. Slots available for 500CIM06 board, star-couplers and power supply units

There are 21 slots in the rack, which can be populated with boards such as CPU card, star-coupler card, or power supply card. Nine 500CIM06 and eight star-coupler cards can be installed.

Slot:	1	2	3	4	5	6	7	8	9	10	11	12	13	14	15	16	17	18	19	20	21
	PSM03		CPU board: IEC 61850, LON	Star coupler board	CPU board with master or slave protocol	Star coupler board	CPU board with master or slave protocol	Star coupler board	CPU board with master or slave protocol	Star coupler board	CPU board with master or slave protocol	Star coupler board	CPU board with master or slave protocol	Star coupler board	CPU board with master or slave protocol	Star coupler board	CPU board with master or slave protocol	Star coupler board	CPU board with master or slave protocol	PSM03 (optional)	

- PSM slots: 1-2 , 20-21
- CPU slots : 3, 5, 7, 9, 11, 13, 15, 17, 19
- Star coupler slots: 4, 6, 8, 10, 12, 14, 16, 18

Figure 3.5 COM581: Typical allocation of slots

3.1.3. 500PSM03: Power supply unit (100W)

Function	Power supply DC/DC converter
Technical data	see Section 3.2 (Technical Specification)
Settings	No settings necessary

The power supply unit is a DC/DC converter with electrical insulation between input and output and an output power of 100 W. It has an input voltage range of 36 V DC to 312 V DC (i.e. 48 V -25%; 250 V +25%) without any switching of ranges. The standard output voltages are +3.3 V DC (8 A), +5 V DC (16 A), +12 V DC (3 A) and -12 V DC (0.5 A). The tolerances of the output voltages are continuously monitored.

The input of the power supply unit 500PSM03 is protected by a 10 A / 250 V slow fuse. The current surge when energizing the PSM03 is limited to 10 A. The use of an external miniature circuit-breaker (m.c.b.) Type S282 UC-K 6 is recommended.

There is an on/off switch on the front of the power supply unit 500PSM03, which must be in the on position when the COM581 is in operation. In the OFF position, the PSU is on standby.

WARNING: The ON/OFF switch on the front of the unit does not isolate its input from the supply.

WARNING: A power supply unit may only be withdrawn or inserted when the power supply is switched off. To withdraw a unit, turn off the switch on the power supply unit **and** disconnect the green power supply cable connector. It is not sufficient to simply switch the unit off at the switch. Other modules may only be withdrawn or inserted when the power supply unit 500PSM03 is switched off.

The power supply unit 500PSM03 has three LEDs:

- Green LED: lights providing all the output voltages are within tolerance and extinguishes in the event of a short-circuit or overload of one or several output voltages.
- Yellow LED: lights when one of a pair of redundant power supply units has failed (corresponds to operation of the “Warning” signaling relay).

- Red LED: lights when one of the modules in the respective rack (including power supply unit) has failed (i.e. not “OK”, corresponds to operation of the “Alarm” relay).

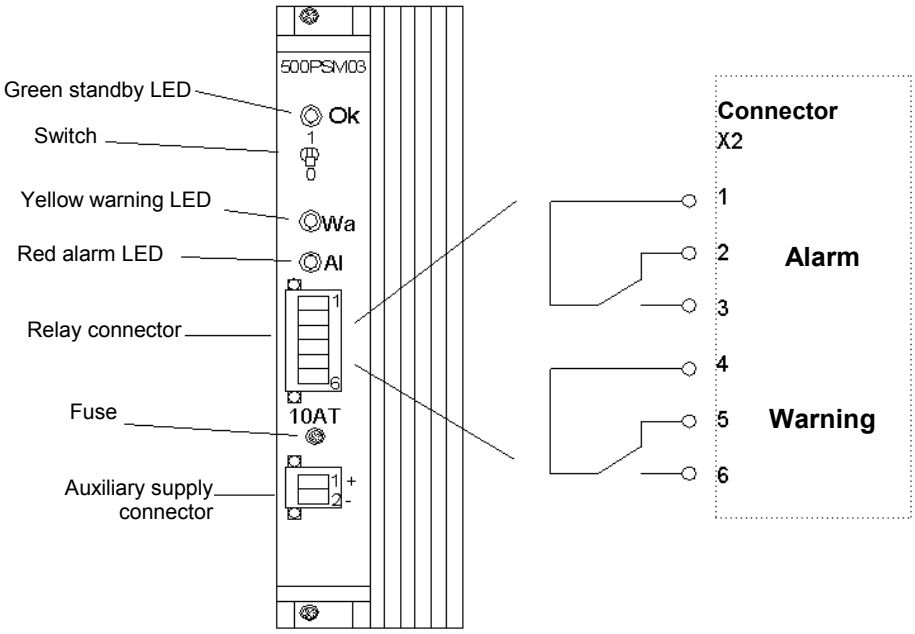

Figure 3.6 COM581: Power supply unit

Connector X2:

1-3 Normal operation

1-2 Alarm, or not in operation

4-6 Normal operation

4-5 Warning, or not in operation

Normally only the “Alarm” contact is connected.

Redundancy:

Provision is made for a second PSM03 to be mounted in slot 20/21, where redundant supplies are required.

NOTICE: Two PSUs are in any event needed where the power dissipation of a COM581 exceeds 100 W (see Section 6.5.4 “Power dissipation and temperature rise”).

With the exception of the contacts, the power supply unit 500PSM03 does not require any maintenance.

3.1.4. 500CIM06: Processor board

Function	Master or slave processor board
Technical data	see Section 3.2 (Technical Specification)
Settings	Setting via the SWT-Tool (see Section 4.3.2)

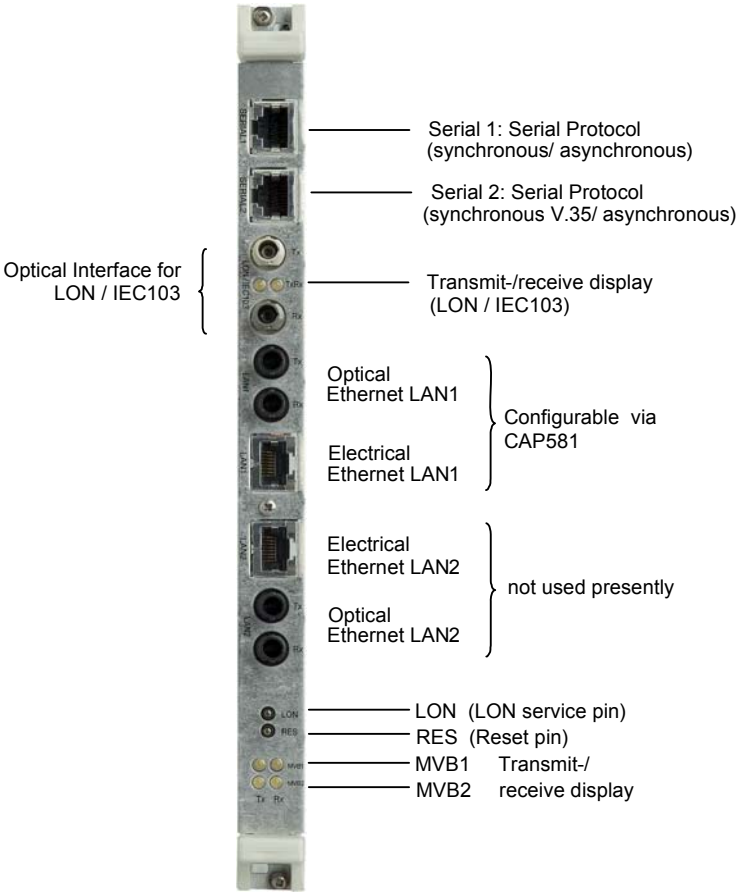

Figure 3.7 Front view of the 500CIM06 board

Buttons:

LON (LOM service pin): When using the LON protocol, this button transmits the service pin telegram and the neuron chip ID (broadcast). In the case of COM581, the LON addresses (subnet, node) are configured in the CAP581 database and loaded in the LON chip when starting COM581.

RES (Reset pin): The reset button executes a hardware reset of the 500CIM06 board or, if the CPU is configured as system controller (IMP Master), of the entire VME bus system.

SERIAL1:

Pin connections on the RJ45 socket:

Pin	Signal	Description
1	S	CLK3 RS232 EIA Standard
2	RTS	RTS RS232 EIA Standard
3	GND	Ground
4	TXD1	Transmit data RS232 EIA Standard
5	RXD1	Receive data RS232 EIA Standard
6	DCD	Ground
7	CTS	SCC CTS RS232 EIA Standard
8	X	BRG01 RS232 EIA Standard

SERIAL2:

Pin connections on the RJ45 socket:

Pin	Signal	Description
1	S	DCD RS232 EIA Standard
2	RTS	RTS RS232 EIA Standard
3	GND	Ground
4	TXD1	Transmit data RS232 EIA Standard
5	RXD1	Receive data RS232 EIA Standard
6	GND	Ground
7	CTS	SCC CTS RS232 EIA Standard
8	X	DTR RS232 EIA Standard

LAN1 and LAN2

Pin connections on the RJ45 socket:

Pin	Signal	Description
1	TX+	Positive Tx line
2	TX-	Negative Tx line
3	RX+	Positive Rx line
4	---	Not connected
5	---	Not connected
6	RX-	Negative Rx line
7	---	Not connected
8	---	Not connected

3.1.4.1. 500LBI02

For a LON CPU card, the LON module 500LBI02 has to be plugged into the IP slot of the 500CIM06.

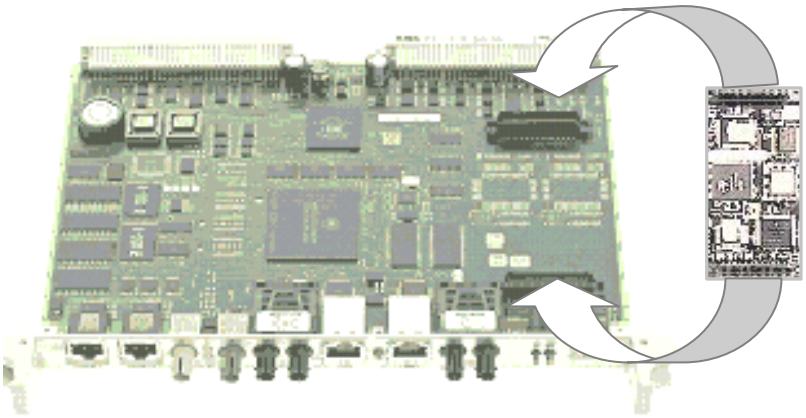

500CIM06 500LBI02

Figure 3.8 500LBI02 mounting

3.1.5. Star-coupler 500SCM02

Function	Optical/electrical signal converter
Technical data	see Section 3.2 (Technical Specification)
Settings	Configuration of the lines on a DIP switch

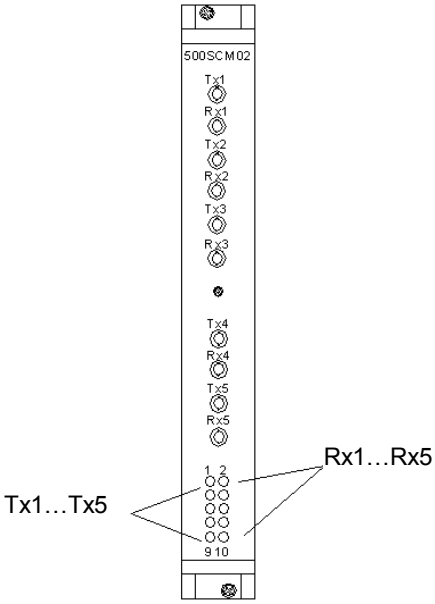

Optical inputs and outputs:
Five pairs of sockets for optical fiber connectors. The outputs Tx# must be connected to the inputs Rx# at the opposite end.

Figure 3.9 Star-coupler 500SCM02

DIP switch settings

The star-coupler is configured on the row of eight switches on the board. The switch positions are written bit-by-bit in the five configuration registers. The two upper bits have no effect. The significance of the various bits is given in Table 3.1. Each of the optical channels is thus connected to a single electrical channel. Precisely one bus mode is supported.

Switch 8	Switch 7	Switch 6	Switch 5		Switch 4		Switch 3	Switch 2	Switch1	
				Bus Mode		Line				Channel
							0	0	1	1
		0	0	MVB	0	Linie A	0	1	0	2
not used	not used	1	0	IEC			0	1	1	3
		1	1	LON	1	Linie B	1	0	0	4
							1	0	1	5

Table 3.1 Configurations of the star-coupler SCM02

3.1.5.1. Star-coupler configuration for IEC103

The following switch positions correspondingly assign star-coupler boards to the backplane lines:

Backplane line 1A = CAP581 configuration serial Port 1	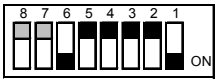
Backplane line 1B = CAP581 configuration serial Port 2	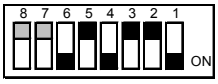
Backplane line 2A = CAP581 configuration serial Port 13	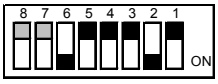
Backplane line 2B = CAP581 configuration serial Port 14	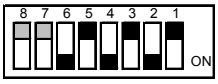
Backplane line 3A = CAP581 configuration serial Port 5	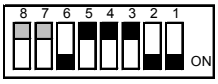
Backplane line 3B = CAP581 configuration serial Port 6	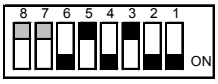
Backplane line 4A =CAP581 configuration serial Port 7	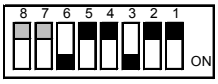
Backplane line 4B =CAP581 configuration serial Port 8	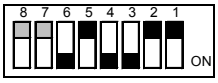

Table 3.2 Settings corresponding to the backplane lines

3.1.5.2. Star-coupler configuration for LON

The following switch positions correspondingly assign star-coupler boards to the backplane lines:

Backplane LON	

Table 3.3 Settings corresponding to the backplane lines

3.1.5.3. Configuring IEC103 lines

The table below defines the connection between the IEC103 application and an optical output either on the CPU board itself or via a backplane line to a star-coupler. The electric backplane lines are needed to configure the star-couplers (SCM02).

Configuration of CAP581 serial lines "Port No."	**Backplane line to be connected to the star-coupler**
1	Backplane line 1A
2	Backplane line 1B
13	Backplane line 2A
14	Backplane line 2B
5	Backplane line 3A
6	Backplane line 3B
7	Backplane line 4A
8	Backplane line 4B
11	Optical output on the CPU
3	Serial Line 1
4	Serial Line 2

Table 3.4 Configuring IEC103 lines

3.1.5.4. Possible combinations of IEC103 lines

Since only four interfaces (1 controller with 4 interface drivers) per CPU can be used simultaneously, the number of possible combinations is limited. The lines which can configured at the same time, are listed under Section 3.1.5.5 (column "IEC 103").

The first CPU (IEC103) should always use serial lines 1,2,3 and 4 (Backplane lines 1A, 1B, 2A and 2B) and the second CPU (IEC103) serial lines 5,6,7 and 8 (Backplane lines 3A, 3B, 4A and 4B) for connections to protection device.

The third CPU (IEC103) can then be used just for the optical outputs (on the CPU) to the protection devices.

3.1.5.5. COM581 ports available for the protocols

Port configuration

The tables below show the CAP tool port configuration for the selected protocols.

- Port 3 = first RS232 serial line from the front CPU
- Port 4 = second RS232 serial line from the front CPU
- Port 11 = optical line from the front CPU
- Port 1,2,13,14,5,6,7,8 = start coupler port numbers

NOTICE: When using LON on port 11 for IMP or CIM boards, Port 3 is not available.

IMP CPU (Master)

For the IEC103 protocol configuration:

→ Means we can configure two IEC103 protocols on the same CPU.

→ Means we can configure four IEC103 protocols on the same CPU.

	IMP Board (Master)							
Port number in CAP-Tool (see Operrating Instructions)	**LON**	**IEC101**	**IEC103**	**IEC104**	**IEC61850**	**RP570/71**	**DNPS**	**DNPM**
Start Coupler	Yes		13 or 7 ① 14 or 8 ②					
Serial Line 1 (Front)		3	3			3	3	3
Serial Line 2 (Front)		4	4			4	4	4
LON/IEC103 (Front) Fiber Optic	11		see above N/A if LON used 11					
LAN1 (Front)				Yes	Yes			
LAN2 (Front)				No	No			
No. of same protocol running on each CPU	1	2	4 ① ② ③ ④	1	1	1	1	1
No. available in Slot 5,9,13			5,6,7,8					

Table 3.5 IMP protocol configuration

CIM CPU (Slave)

→ Means we can configure four IEC103 protocols.

	CIM Board (Slave)							
Port number in CAPTool (see Operating Instructions)	**LON**	**IEC101**	**IEC103**	**IEC104**	**IEC61850**	**RP570/71**	**DNPS**	**DNPM**
Start Coupler	Yes		1 or 5 or 11 or 13 ① 2 or 6 or 14 ② 3 or 7 ③ 4 or 8 ④					
Serial Line 1 (Front)		3	see above			3	3	3
Serial Line 2 (Front)		4	see above			4	4	4
LON/IEC103 (Front) Fiber Optic	11		see above N/A if LON used 11					
LAN1 (Front)				Yes	Yes			
LAN2 (Front)				No	No			
No. of same protocol running on each CPU	1	2	4 ① ② ③ ④	1	1	1	1	1
No. available in Slot 5,9,13			5,6,7,8					

Table 3.6 CIM Protocol configuration

3.1.5.6. Protocol selection for each CPU

On each CPU board in the maximum, two protocols can be operated. Table 3.7 shows the supported protocols and the possible combinations on one CPU board.

		First Protocol								
		LON	**IEC61850**	**IEC60870-5-103**	**IEC60870-5-101**	**IEC60870-5-104**	**DNP 3.0 Slave**	**DNP 3.0 Master**	**RP570/571**	**TG809**
Second Protocol	**LON**	No	Single	Yes	Yes	Yes	Yes	Yes	Single	No
	IEC61850	Single	No	Single	Yes	Single	Single	Single	Single	No
	IEC60870-5-103	Yes	Single	No	Yes	Yes	Yes	Yes	Single	No
	IEC60870-5-101	Yes	Yes	Yes	Yes	Yes	Yes	Yes	Single	No
	IEC60870-5-104	Yes	Single	Yes	Yes	No	Yes	Yes	Single	No
	DNP 3.0 Slave	Yes	Single	Yes	Yes	Yes	No	Yes	Single	No
	DNP 3.0 Master	Yes	Single	Yes	Yes	Yes	Yes	No	Single	No
	RP570/571	Single	Single	Single	Single	Single	Single	Single	No	No
	TG809	No	No	No	No	No	No	No	No	No

Table 3.7 Protocol selection per CPU

3.1.6. Ordering numbers for COM581 spares

3.1.6.1. Configured parts

In the case of configured parts, subunits are fitted and the corresponding firmware is installed.

3.1.6.2. Overview of components:

Device	Part No.	Text
500CIM06 IEC 61850	1KHL150005R0002	configured IEC 61850 board
500CIM06 IEC 61850 ISP	1KHL150005R0013	configured IEC 61850 board
500CIM06 LON	1KHL150005R0001	configured LON IMP board
500CIM06 LON ISP	1KHL150005R0011	configured LON ISP board
500CIM06 IEC 60870-5-103	1KHL150005R0003	configured IEC 60870-5-103 ISP board
500CIM06 DNP 3.0 Slave	1KHL150005R0006	configured DNP 3.0 Slave board
500CIM06 DNP 3.0 Master	1KHL150005R0012	configured DNP 3.0 Master board
500CIM06 IEC 60870-5-101	1KHL150005R0004	configured IEC 101 Slave board for 1 NCC link
500CIM06 IEC 60870-5-101	1KHL150005R0005	configured IEC 101 Slave board for 2 NCC links
500CIM06 RP570/571	1KHL150005R0009	configured RP571 Slave board
500CIM06 TG809	1KHL150005R0010	configured TG809 Slave board, (on request)
500CIM06 IEC 60870-5-104	1KHL150005R0007	configured IEC 104 Slave board
500CIM06 2 protocols IMP	1KHL150005R0020	configured IMP board with 2 protocols
500CIM06 2 protocols IMP LON	1KHL150005R0022	configured IMP board with 2 protocols and with LON
500CIM06 2 protocols ISP/ISG	1KHL150005R0021	configured ISP/ISG board with 2 protocols
500CIM06 2 protocols IMP/ISG LON	1KHL150005R0023	configured ISP/ISG board with 2 protocols and with LON

Remark : ‘board (IMP)’ → the 500CIM06- Master Board of a COM581System
‘board (CIM)’ → the 500CIM06- Slave Board(s) of a COM581System

3.1.6.3. Overview of components available for order:

Device	Part No.	Text
500LBI02	1MRB178032 R0010	LON ancillary board
500SCM02	1MRB150037 R0001	Star coupler board
Power supply:		
500PSM03	1MRB150038 R0001	Power supply 100 W

Backplane:

500CUB03*COM581	1MRB178062 R0002	Backplane for COM581

Enclosures and accessories:

500HMI02	1MRB1500059R001	Control and display unit LMI
Cover plate	1MRB400164 R0004	Blanks of 1 slot
Frontplate	1MRB400113 P0084	For 1 HMI
Device	**Part No.**	**Text**
MMI/bus cable	1MRB380053 P0001	Ribbon cable
PC/HMI cable cable	1MRB380084 R0001	electric-to-optical connecting
PC/CPU cable	1MRB380081 R0001	Event logger cable
Adhesive strip	1MRB400216 P0001	On top "ABB COM581"
Adhesive strip	1MRB400203 P0011	No print at bottom

3.2. Function and technical specification of the COM581

See Data Sheet “COM581 Gateway for High and Medium-Voltage Substations”, 1MRB520206-Ben.

4. COM581 TOOLS

4.1. *COM581 engineering and system configuration procedure*

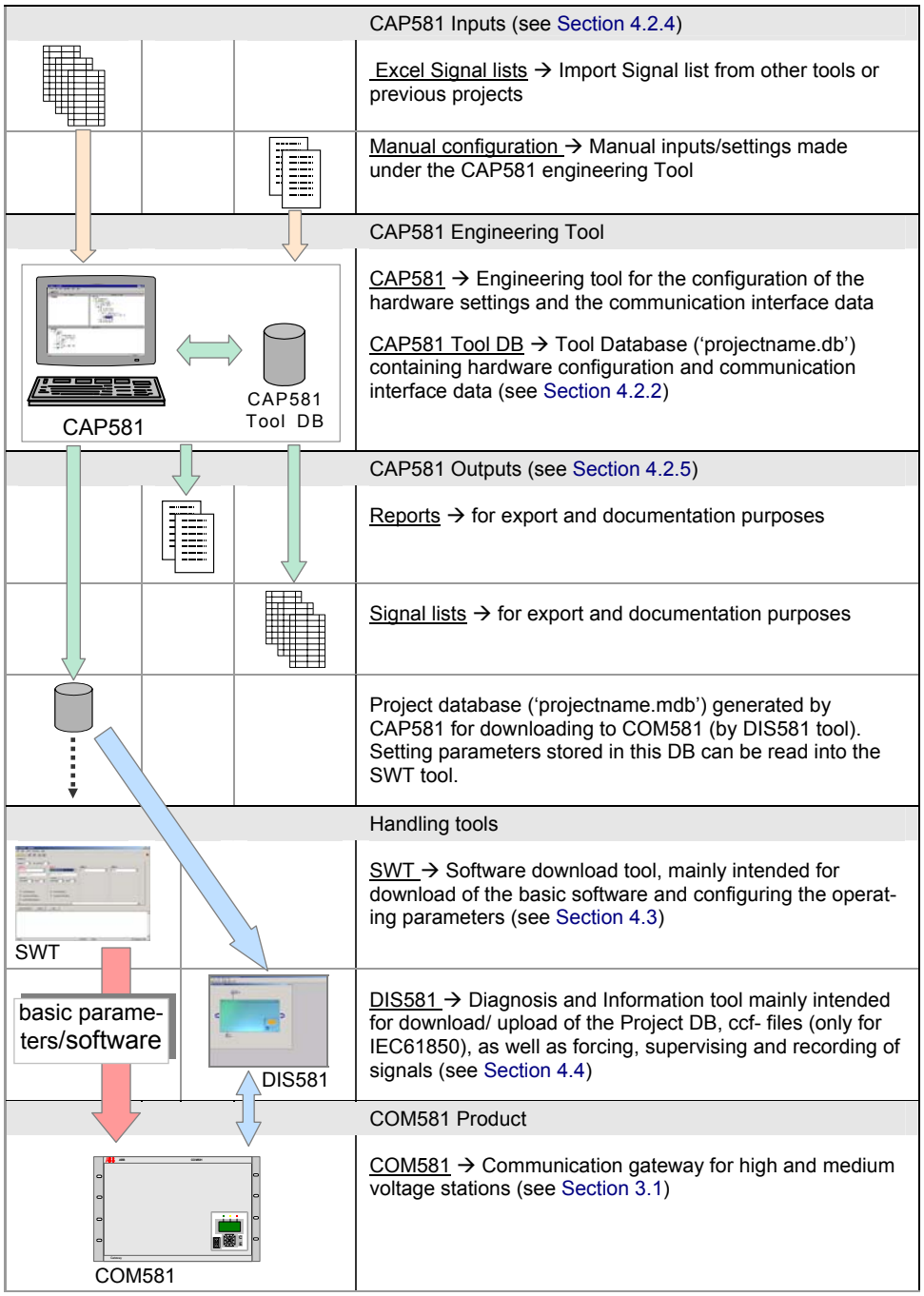

Figure 4.1 COM581 engineering and system configuration process

4.2. CAP581 tool

CAP581 is used to configure the data communication interfaces (e.g. LON, IEC101, IEC61850, DNP3.0, RP571 etc.) and make all the hardware settings (see Figure 4.1).

It is also used to configure the protocol parameters and the conversion and marshalling tables. Forms are provided for entering the data in the tables and a signal list can be imported.

The configuration is recorded in a list and is largely automated. The gateway COM581 is only ready to perform its function after the parameter settings and the configuration have been downloaded to it. This operation is carried out via the optical service interface as well as an Ethernet interface. The Ethernet interface is only required if the IEC61850 or IEC104 protocol is utilized.

The configuration generated by CAP581 on the PC is downloaded to the respective gateway via its optical interface and an Ethernet connection using the Windows application DIS581 (Diagnostic and Information System, see Section 4.4).

4.2.1. Archiving and maintenance

Once the customer has accepted the COM581 system, the project database and the complete engineering environment representing the current status of the plant are stored on a CD. The COM581 programs and utilities are also provided on a CD-ROM.

4.2.2. System requirements

NOTICE: Only those with the PC access rights of an administrator can install the COM581 programs.

Hardware requirements

- IBM compatible PC better than 586 (Pentium II recommended)
- 64 MB main memory
- at least 200 MB of free hard disk space for the configuration and COM581 programs

Software requirements

- Windows 2000 is supported for the SWT-Version 5.0 and higher
- Windows XP is supported for the SWT-Version 6.0 and higher

4.2.3. CAP581 tool database

An absolutely up-to-date consistency throughout the entire life of a COM581 project is achieved by using the tool database contents for all operations. Signal and parameter lists and function plan programs are derived from the current tool data set and therefore always consistent. The file format is '.db', i.e. it is an MS ACCESS database

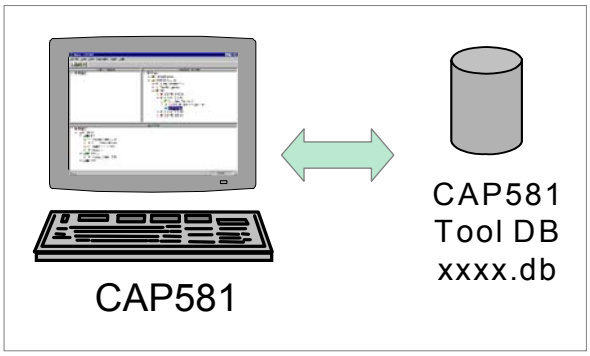

(engineering process → see Figure 4.1)

Figure 4.2 CAP581 Tool Database

4.2.4. CAP581 inputs

- **EXCEL signal list (input)**

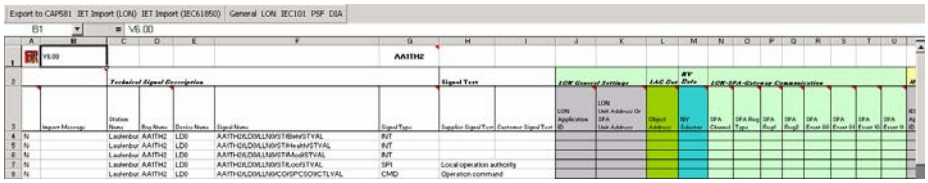

(engineering process → see Figure 4.1)

Figure 4.3 Excel signal list (input)

For details about the structure and application of an Excel Signal List see Operating Instructions CAP581 1MRB520184-Uen Section 1.

- **Manual inputs/ settings**

  For details about the setting engineering, see Operating Instructions CAP581 1MRB520184-Uen Section 7 and 8.

4.2.5. CAP 581 outputs

- **Reports**

  For details about creating reports, see Operating Instructions CAP581 1MRB520184-Uen Section 9.

- **Signal list (output)**

  For details about creating Signal Lists (output), see Operating Instructions CAP581 1MRB520184-Uen Section 9.

- **Project database**

  Project database (‘projectname.mdb’) generated by CAP581 for downloading to COM581 by DIS581 tool (see Section 4.4). Setting parameters stored in this DB can be read into the SWT tool (see Section 4.3).

4.3. SWT software download tool

The SWT is mainly intended for loading the COM581 software, but it also provides an easy-to-use, menu-guided facility for configuring the operating parameters (see Figure 4.1).

The SWT permits the following:

- loading of the basic software
- loading of the default database
- setting of the CPUs number and their addresses
- setting of the TCP/IP addresses for the event logger and IEC 104 and IEC 61850 Protocol (if existing)

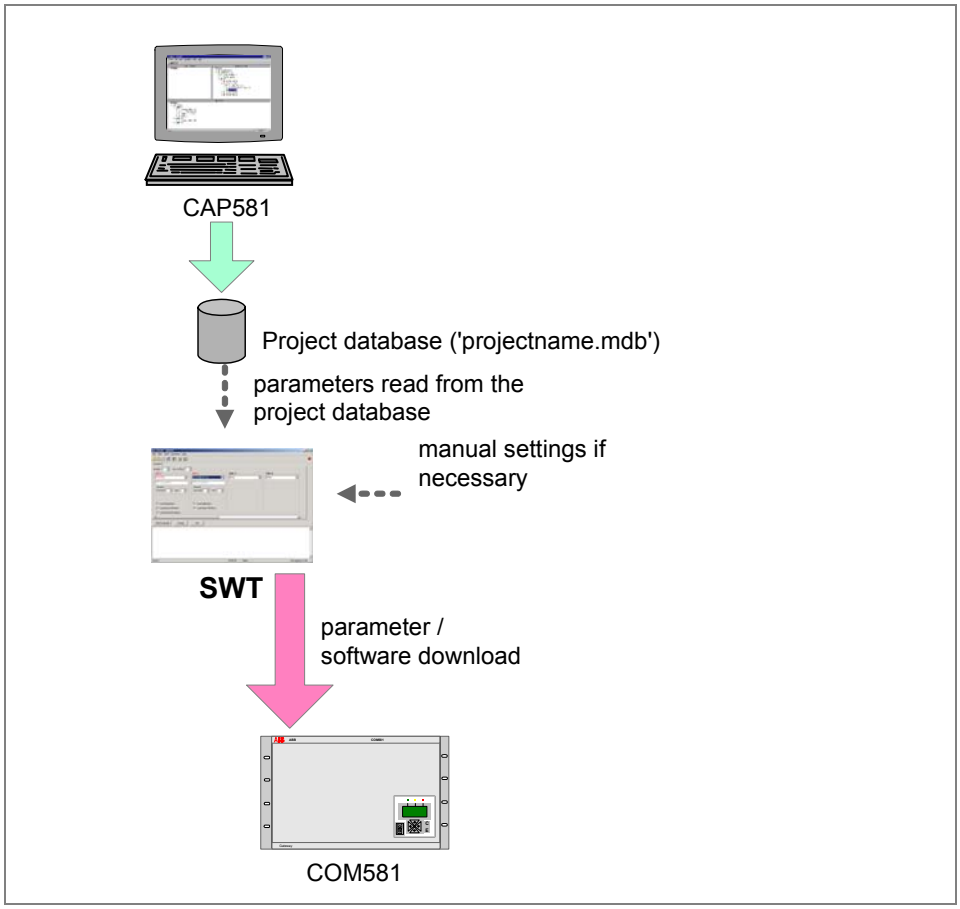

(System configuration process → see Figure 4.1)

Figure 4.4 Parameter/ software download process

NOTICE: A COM581, delivered to a customer already contains the basic software and the default database including the necessary setting. Due to this, the use of the SWT software is necessary only, if changes of software, or settings would be performed on site.

The functionality and menus of the SWT are described in the following sections.

4.3.1. Installing the software package

- Check first that there is at least 200 MB of free space on the hard disc.
- Run the SWT installation program from the supplied CD.
- Follow the installation instructions on the screen (enter the installation directory and choose a program group to which the program's icon should be added).

4.3.2. Loading the basic software

The procedure for loading the basic COM581 software is explained in this Section. The SWT (software download tool) permits to download the basic software, it is only necessary to select the appropriate protocols from the dialogues and set the general COM581 parameters (e.g. number of CPUs, node ID etc.).
The above mentioned settings can also be read out from the COM581 Project Database (by clicking on the menu item File → Open Project Database).

NOTICE: It is important that the settings made using the SWT be the same as those in the CAP581 database.

The following Figure 4.5 shows an example for loading a COM581 with three CPU boards:

- CPU 1 → an IEC61850 board
- CPU 2 → an IEC101 board
- CPU 3 → an IEC104 board

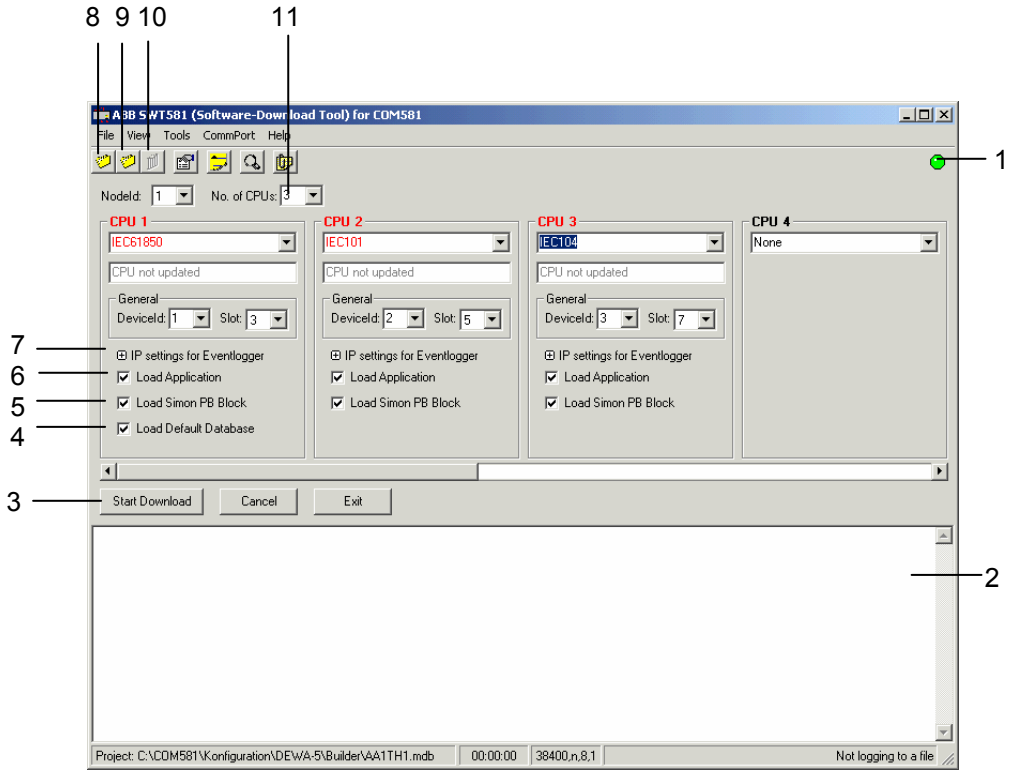

1	Serial PC COM/Port green → on // red → off
2	Communication window COM581 output text display → Event logger output when active
3	Load COM581 (Start Download see Section 4.3.3.1)
4	Load default-database (any existing database is deleted)
5	Load parameter
6	Load protocol
7	IP Settings for Event logger (and IEC61850 or IEC104 Protocol, if configured)
8	Open COM581 project database
9	Write the output in the communication window to a log file (open log file)
10	Stopping writing log file (close logfile)
11	Number of CPU boards

Figure 4.5 Loading a COM581 with three CPU boards

The following parameters must be read from the project database (Menu item File → Open Project Database) or manually configured and downloaded (for manual configurations the protocol has to be selected first and then the general parameters are set):

- node ID
- number of CPUs
- device ID and slot of the respective CPU board
- IP address
- With the SWT the IP address of the individual cards is read from the project database or can be set be set manually. **The Default IP address is 192.168.0.1**
  The IP address shown under Menu item "IP Setting for the Event logger" is utilized for the Event logger and for the Ethernet protocols (IEC 104 and IEC 61850), if configured. For non-Ethernet protocols (IEC 101, DNP 3.0) the IP address set with the SWT is used for the Event logger only.

  In case that the IP address to be downloaded to the COM581 is not the same as configured in the project database (with tool CAP581), it has to be changed manually.
- The IP address visible in the SWT is downloaded to the COM581, after clicking on the button "Start download"

NOTICE: All components of the basic software should be always loaded to avoid errors. This includes Simon PB block applications.

4.3.3. Connection properties

Under the Menu item ComPort → Properties, the connection properties can be adjusted.

The standard (default) settings are as follows:

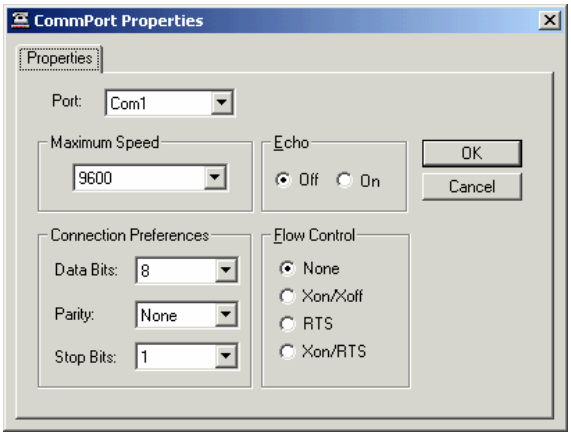

Figure 4.6 Standard connection parameters

4.3.3.1. Load COM581 (start download)

1. Loading will start by clicking on the button “Start download”

   → The following steps are displayed to the user:

2. Switch off the COM581
3. Connect the PC to the COM581 (500CIM06) via the Serial2 connector to the first CPU card in slot 3. The pin connections for the interface cable between the gateway COM581 and the COM port on the PC are given in Section 11.
4. Switch on the COM581
5. The basic software, parameters and the default database are downloaded into the configured card. The user is not required to load each card separately. However by using the first card the complete COM581 can be loaded one-shot.

   In the communication window of the SWT, the system-monitoring program Simon is active and in a separate window, the download process state is indicated. If under the menu item File → Create Log File a communication log file is opened, the sequence of Simon events displayed in the communication window is stored in this file.

The display of COM581 LHMI indicates “Simon Remote Control” now and in the SWT tool, the download process state is indicated.

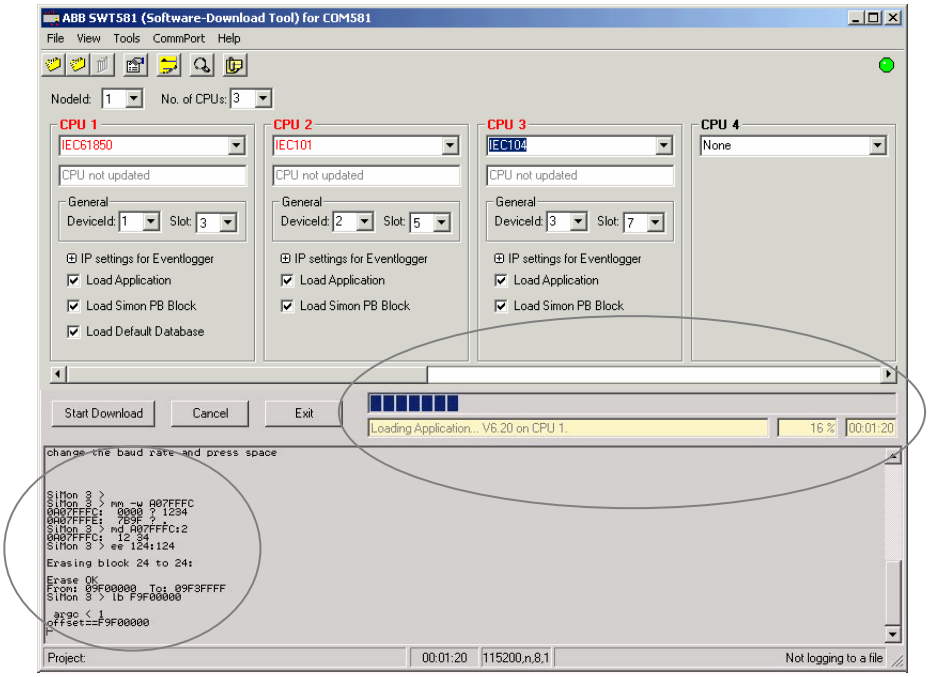

Figure 4.7 SWT download process state

6. After the download has finished successfully, the SWT message “Software updated” appears.

   If the download included all components of the basic software, at this stage, the COM581 indicates “limited ready” in the LHMI. The system is ready to download the project data base and the ccf-files (pertinent for IEC61850 protocol only) by the DIS Tool now (see Section 4.4).

4.3.4. Limitations

NOTICE: The device ID for the master board is always 1. Each board in a COM581 must have a unique device ID.

Number of CPUs	Enter the total number of all the 500CIM06 boards in the COM581. Valid entries are: 1..9

4.4. DIS581 Tool

The “Diagnosis and Information System” provides the user with the following information, testing and download facilities:

- Information about COM581 data configuration
- Forcing signal statuses for test purposes
- Supervising of signals and recording signals
- Functionality of the event logger
- Upload, download facility for the COM581 project database and the ccf-files (pertinent for IEC61850 protocol only).

The protocols supported by the DIS581 are listed in Section 1.2.

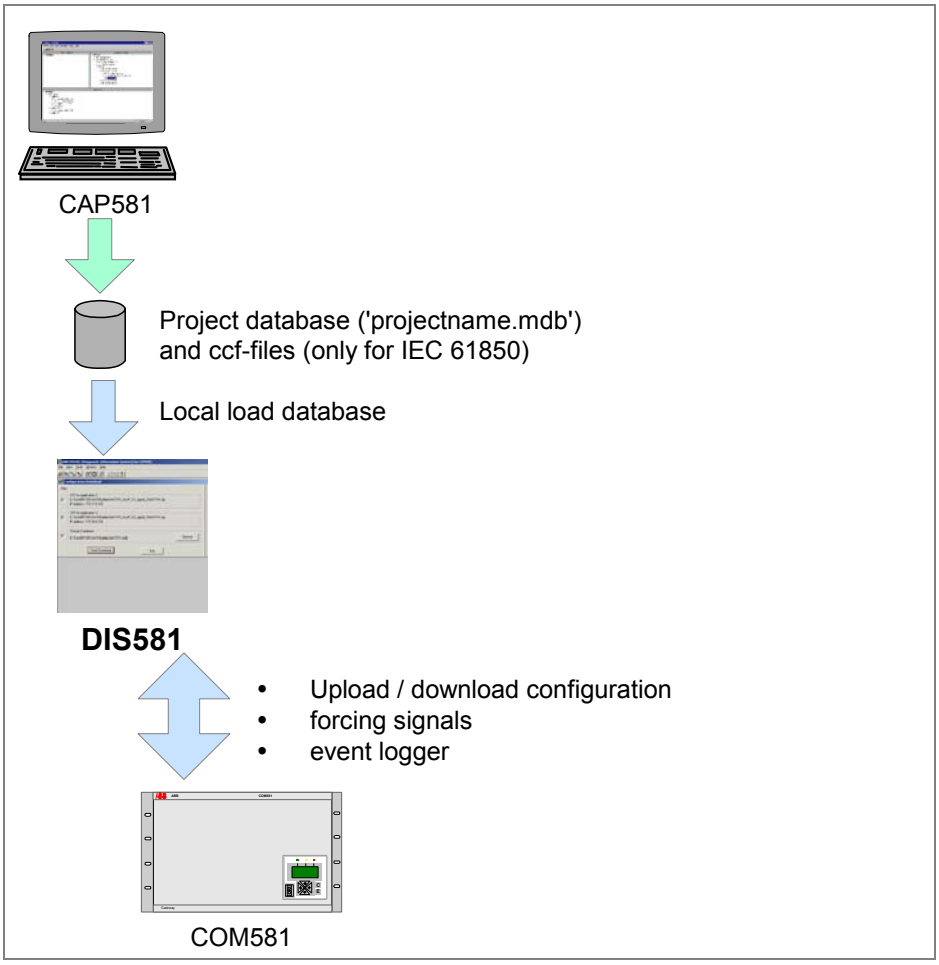

(System configuration process → see Figure 4.1)

Figure 4.8 Data exchange by the DIS581 tool

The functionality and menus of the DIS581 are described in the following sections.

4.4.1. Loading a local COM581 database

Before all the DIS581 functions are accessible for use either

- a database has to be uploaded from the COM581 system (see Section 4.4.2 below) or
- load an existing local database with the menu item

  File → Local Load Database

4.4.2. Configuration upload

With the menu item File → Upload Configuration the database and the ccf-file (only for IEC 61850) can be uploaded from the COM581 and saved to the PC. The database is uploaded via the optical-interface (LMI) and the ccf-file via LAN (configuration example for LAN1 connection, see Section 4.4.4). The interface connections are described under Section 11.1.

NOTICE: To „Upload“, the COM581 must be on *System ready*.

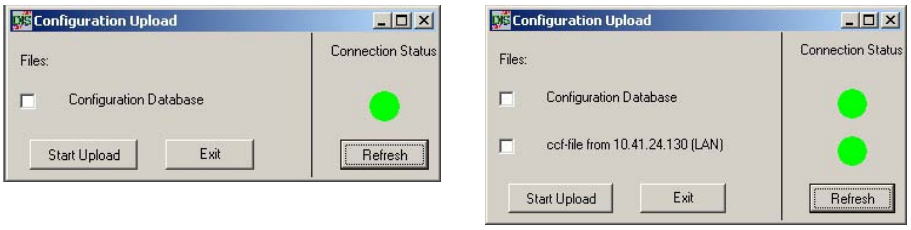

Figure 4.9 Upload without and with Local Load

NOTICE: If before the “Upload” a “Local Load” is done from the Databank stored in the COM581, then the database and the ccf file can be uploaded simultaneously. Else first the Databank has to be first uploaded and then the ccf file should be uploaded.

NOTICE: The two round symbols in both windows (Figure 4.9) indicate whether a connection to the respective device is functioning or not (Green = Connection OK, Red = Connection not OK).

4.4.3. Configuration download

By selecting the menu item File → Download Configuration a configuration can be downloaded to the COM581. The Database pertaining to the configuration is downloaded via the optical interface (LMI), and the ccf file (only pertinent for IEC 61850) via the Ethernet using FTP. The interface connections are described under Section 11.1.

For upload/ download of the ccf-file, the IP address of the CPU card processing the IEC 61850 Protocol has to be adjusted under the PC network LAN setting (→ Configuration Example see Section 4.4.4).

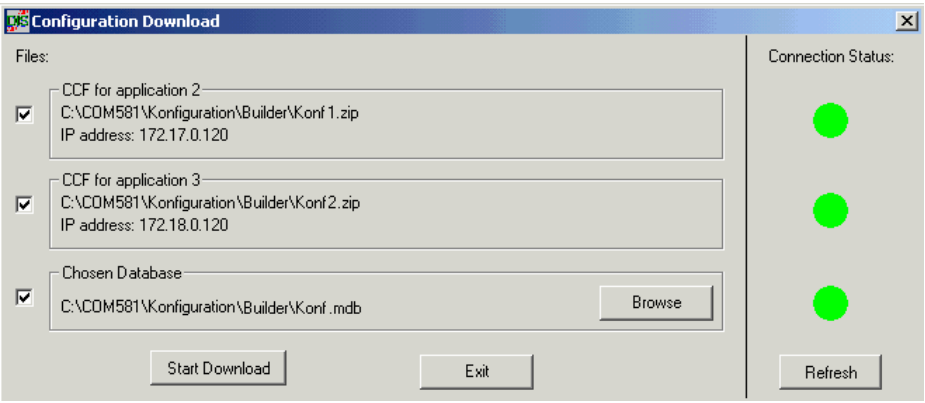

Figure 4.10 Download Display

NOTICE: The two round symbols in both windows (see Figure 4.10) indicate whether a connection to the respective device is functioning or not (Green = Connection OK, Red = Connection not OK).

NOTICE: The COM581 has to be in the state Limited Ready (Section 4.4.5) before a “Download” is performed.

4.4.4. Example of an upload / download PC-LAN configuration

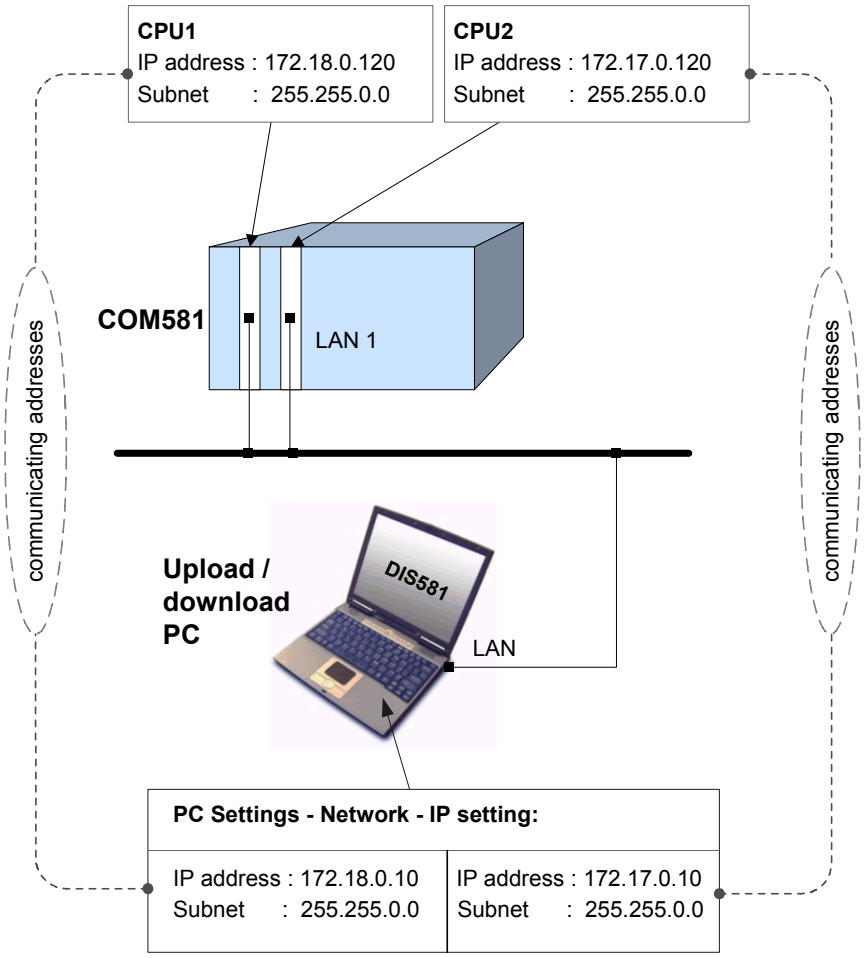

Figure 4.11 IP- Settings for ccf- File up/download (for IEC61850 only) and the event logger

The setting of the IP- addresses is made during the basic engineering of the COM581 project database, using the CAP581 tool (see Section 4.2). After loading the project database into the SWT tool, the settings can be viewed or changed under the item “IP settings for Event logger” (see Section 4.3.2).

4.4.5. Procedure for putting COM581 in the "Limited Ready" status:

- Switch on COM581.
- Press the downwards arrow once when "Sync Point 6" appears on the local COM581 HMI (see Figure 4.12).
- COM581 restarts.
- "Limited Ready" appears on the local COM581 HMI and the central orange lamp flashes.

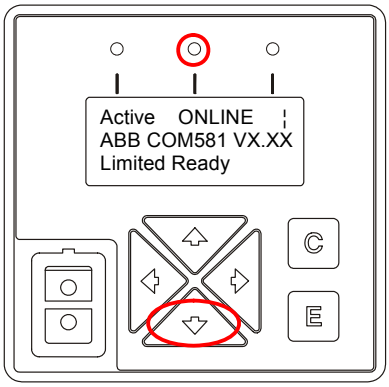

Figure 4.12 COM581 LMI

COM581 is now in the *Limited Ready* status and ready to receive the database from the PC.

4.4.6. Comparison of databases

The content of two databases can be compared by selecting the menu File → Compare Database. This compares all the tables and their contents in the two databases.

In case differences exist, they are listed as shown in the following table (see Figure 4.13).

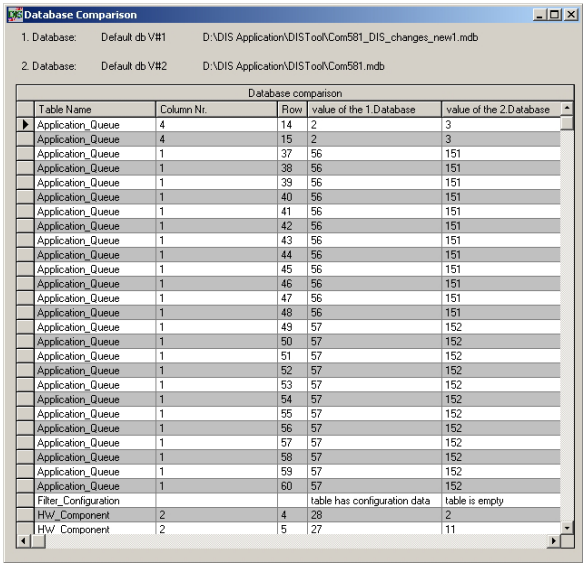

Database Comparison

1. Database: Default db V#1 D:\DIS Application\DISTool\Com581_DIS_changes_new1.mdb

2. Database: Default db V#2 D:\DIS Application\DISTool\Com581.mdb

Database comparison

Table Name	Column Nr.	Row	value of the 1.Database	value of the 2.Database
Application_Queue	4	14	2	3
Application_Queue	4	15	2	3
Application_Queue	1	37	56	151
Application_Queue	1	38	56	151
Application_Queue	1	39	56	151
Application_Queue	1	40	56	151
Application_Queue	1	41	56	151
Application_Queue	1	42	56	151
Application_Queue	1	43	56	151
Application_Queue	1	44	56	151
Application_Queue	1	45	56	151
Application_Queue	1	46	56	151
Application_Queue	1	47	56	151
Application_Queue	1	48	56	151
Application_Queue	1	49	57	152
Application_Queue	1	50	57	152
Application_Queue	1	51	57	152
Application_Queue	1	52	57	152
Application_Queue	1	53	57	152
Application_Queue	1	54	57	152
Application_Queue	1	55	57	152
Application_Queue	1	56	57	152
Application_Queue	1	57	57	152
Application_Queue	1	58	57	152
Application_Queue	1	59	57	152
Application_Queue	1	60	57	152
Filter_Configuration			table has configuration data	table is empty
HW_Component	2	4	28	2
HW_Component	2	5	27	11

Figure 4.13 Database Comparison

4.4.7. *Communication*

4.4.7.1. *Connecting the PC to COM581*

Refer to Section 11.1.1.

4.4.7.2. *COM port setting*

Under the Menu item File → Settings→ Communication Port, the connection properties can be adjusted .

(see Figure 4.14)

4.4.7.3. *Baudrate*

With the Menu item File → Settings → Baudrate, the speed of the Download, resp. Upload can be configured (currently 9600 ... 115200 Baud supported).

(see Figure 4.14)

4.4.7.4. *Node ID*

With the Menu item File → Settings→Node ID, the Node ID for the internal communication of COM581, e.g. database download and hot standby configurations (see Figure 4.14). While loading the local database (menu item File → Local Load Database) this Node ID is overwritten by the value stored in the project database.

4.4.7.5. Check online

The File → Settings → Check Online button provides facility for checking whether communication with COM581 can be established (see Figure 4.14).

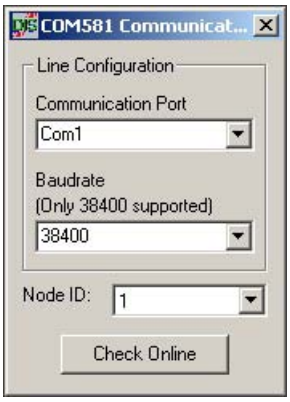

Figure 4.14 Communication environment

4.4.8. Print

The DIS581 print function is activated either by pressing the key combination *Ctrl+P* or selecting File → Print.

There are two alternative modes for printing (see Figure 4.15):

1. *"ALL"* prints the active DIS581 window.
2. *"Selection"* is only possible for tables and prints the selected line.

Figure 4.15 Print setting

4.4.9. Protocol monitoring

This function monitors and records the exchange of data of the protocols and provides facility for it to be viewed. The signals are recorded in a ring buffer and a filter is provided for determining what is viewed. The function is activated by selecting the Menu item Tool → Protocol Monitoring.

4.4.9.1. Configuration

Firstly it is necessary to decide at which level the individual protocols have to be monitored. This is set at the top left of the Protocol Monitoring dialogue (see Figure 4.16).

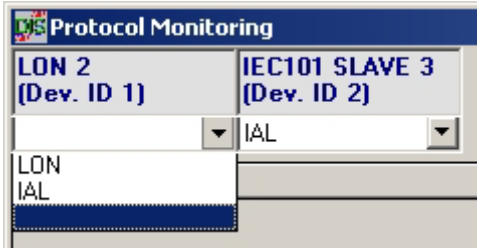

Figure 4.16 Selecting the point to be monitored

LON and IEC101 can be monitored in one of two ways, i.e. either the protocol itself or the internal application layer (IAL). Only the IAL can be monitored in the case of **all** the other protocols. The following figure is a schematic illustration of the monitoring.

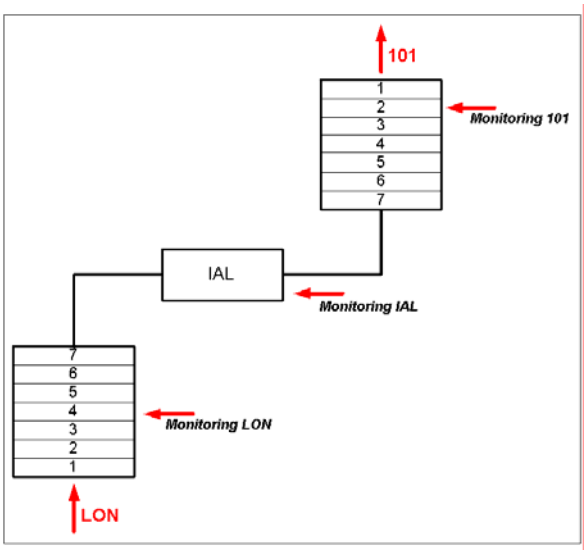

OSI-Model

7. Application layer
6. Presentation layer
5. Session layer
4. Transport layer
3. Network layer
2. Data link layer
1. Physical layer

Figure 4.17 Monitoring points in the OSI model

4.4.9.2. Filters

The dialogue for configuring the filters is opened by clicking on the *Filtering* button. There is a table in the left half of the dialogue listing the currently active filters. New filters can be added and configured in the right half of the dialogue.

Creating (Add) filters

Figure 4.18 shows a protocol monitoring table which lists a number of signals. Assuming, for example, only those signals should be presented that, starting at the ninth position, have a value of 48, a new filter has to be created and “9” entered as the *Start Position* and “48” as the *Pattern*. The next record then only displays the signals, which fulfil these conditions.

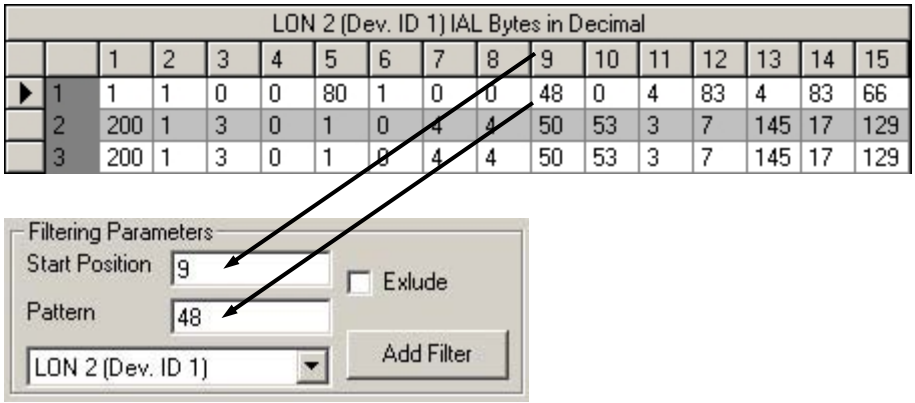

	1	2	3	4	5	6	7	8	9	10	11	12	13	14	15
1	1	1	0	0	80	1	0	0	48	0	4	83	4	83	66
2	200	1	3	0	1	0	4	4	50	53	3	7	145	17	129
3	200	1	3	0	1	0	4	4	50	53	3	7	145	17	129

Figure 4.18 Filter settings

By checking the *Exclude resp. Except* box the user determines whether only signals that fulfill the conditions or all signals are recorded.

To finalize the creation of a filter with the set conditions it is necessary to click on the Add Filter button.

NOTICE: The number of filters, which can be set for each protocol is limited to five.

The *AND* and *OR* check boxes enable filters created for different protocols to be linked.

Figure 4.19 Combining filters

Deleting filters

The table in the filter configuration dialogue lists all the existing filters. To delete a filter, simply mark it and press either the *Backspace* or *Delete* key.

NOTICE: The COM581 filter settings are only updated when the *Start* button in the *Protocol Monitoring* dialogue is operated.

4.4.9.3. Start recording

Specific DIS581 signals are not recorded during normal COM581 operation. The user has to activate the function by clicking on the *Start* button. Signals are then stored in the ring buffer until the *Stop* button is operated.

4.4.9.4. Viewing records

To view the signal records, click on the *Upload Telegrams* button. They are then displayed in the table on the left and the associated times in the table on the right.

Where several protocols are in use, corresponding tabs appear below the tables (see Figure 4.20).

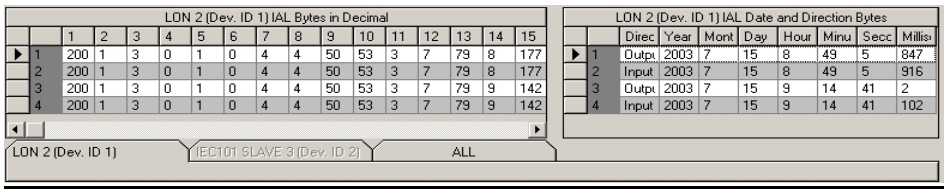

Figure 4.20 Records loaded from the ring buffer

4.4.9.5. Deleting records

Click on the *Clear Telegrams* button to delete the table in the tool and the signals stored in the COM581 ring buffer.

4.4.10. Forcing signal statuses

Forcing the statuses of signals enables them to be transmitted to the power system control centre (NCC) or to the devices.

The function is a simple way of setting signal statuses for test purposes.

It is activated by selecting the menu Tool → Signal Forcing.

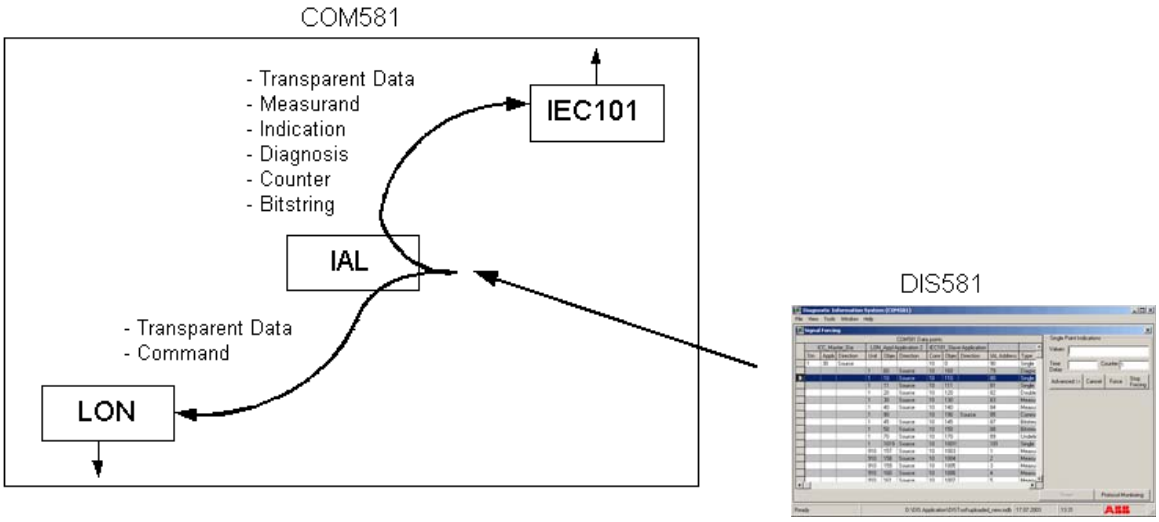

Figure 4.21 Illustration of how signal statuses are forced

All the COM581 signals that can have forced statuses are listed in the COM581 *Datapoints* table (see Figure 4.22).

ICC_Master_Dia			LON_Appl Application 2			IEC101_Slave Application				
Stn	Appli	Direction	Unit	Objec	Direction	Comr	Objec	Direction	IAL Address	Type
1	30	Source				10	0		90	Single Point Indication Dia
			1	60	Source	10	160		79	Diagnosis
			1	10	Source	10	110		80	Single Point Indication
			1	11	Source	10	111		81	Single Point Indication
			1	20	Source	10	120		82	Double Point Indication
			1	30	Source	10	130		83	Measurand signed 16 bit
			1	40	Source	10	140		84	Measurand signed integer
			1	90		10	190	Source	85	Command
			1	45	Source	10	145		87	Bitstring
			1	50	Source	10	150		88	Bitstring
			1	70	Source	10	170		89	Undefined for LON
			1	1019	Source	10	10019		101	Single Point Indication
			910	157	Source	10	1003		1	Measurand signed 16 bit
			910	158	Source	10	1004		2	Measurand signed 16 bit
			910	159	Source	10	1005		3	Measurand signed 16 bit
			910	160	Source	10	1006		4	Measurand signed 16 bit
			910	161	Source	10	1007		5	Measurand signed 16 bit
			910	162	Source	10	1008		6	Measurand signed 16 bit
			910	163	Source	10	1009		7	Measurand signed 16 bit
			910	164	Source	10	1010		8	Measurand signed 16 bit
			910	165	Source	10	1011		9	Measurand signed 16 bit
			910	166	Source	10	1012		10	Measurand signed 16 bit
			910	167	Source	10	1013		11	Measurand signed 16 bit
			910	168	Source	10	1014		12	Measurand signed 16 bit
			910	169	Source	10	1015		13	Undefined for LON
			910	170	Source	10	1016		14	Undefined for LON
			910	171		10	1017	Source	15	Command
			910	172		10	1018	Source	17	Command
			910	173		10	1019	Source	19	Command
			910	174		10	1020	Source	21	Command
			910	175		10	1021	Source	23	Command
			910	176		10	1022	Source	25	Command

Figure 4.22 Signal table

NOTICE: Click on the heading of the respective column to sort the table according to it.

4.4.10.1. Transmitting a signal

Firstly select the signal to be transmitted. This opens a dialogue corresponding to the signal type (see Figure 4.23). Enter the value, the delay and the number of repeat transmissions for the respective signal.

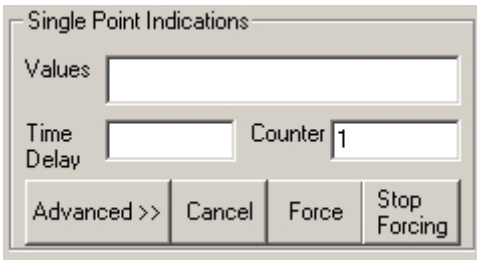

Figure 4.23 Standard Dialogue for entering the details of a signal

NOTICE: Setting the counter to zero results in the signal being transmitted continuously at the interval of the delay setting until the “Stop Forcing” button is operated or the dialogue is closed.

Further settings are presented upon clicking on the *Advanced* button (see Figure 4.24). Additional signal configuration can be set in this window.

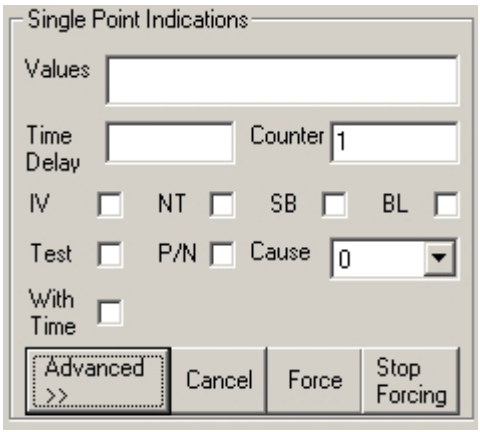

IV	Invalid
NT	Not topical
SB	Substituted
BL	Blocked
Test	Test
P/N	Positive / Negative
Cause	Cause of transmission
With Time	With Time

Figure 4.24 Advanced dialogue

Once all the settings have been made, clicking on the *Force* button transmits the respective signal.

NOTICE: It is possible to view the signals in parallel with the *Monitoring* (Section 4.4.9) the *Forcing* dialogue windows.

4.4.11. Event logger

The Event logger allows the user during tests or commissioning, to check for faults in the configuration or to recognize communication faults between two devices.

DANGER: Only authorized or trained personal should deal with the event logger outputs. In normal operation the event logger should be de-activated, to prevent adverse performance.

The event logger can be activated separately for each communication channel - >IP address (each 500CIM06)

NOTICE: A recent addition – the event logger is output via the ethernet interface (UDP). The serial communication link is no longer supported. For further information regarding the event logger connection, see Section 11.1.2.

The event logger output can be activated from the DIS581 menu.

For using the event logger, the user has to build a connection to the desired 500CIM06 board . For building the connection, put in the IP address of the board (see also Section 4.3.2).

NOTICE: The settings (IP address and subnet mask) on the CPU boards and on PC (event logger) have to be matching (see Figure 4.11).

The user can define the duration of the event logger output (day or week) and the amount of details.

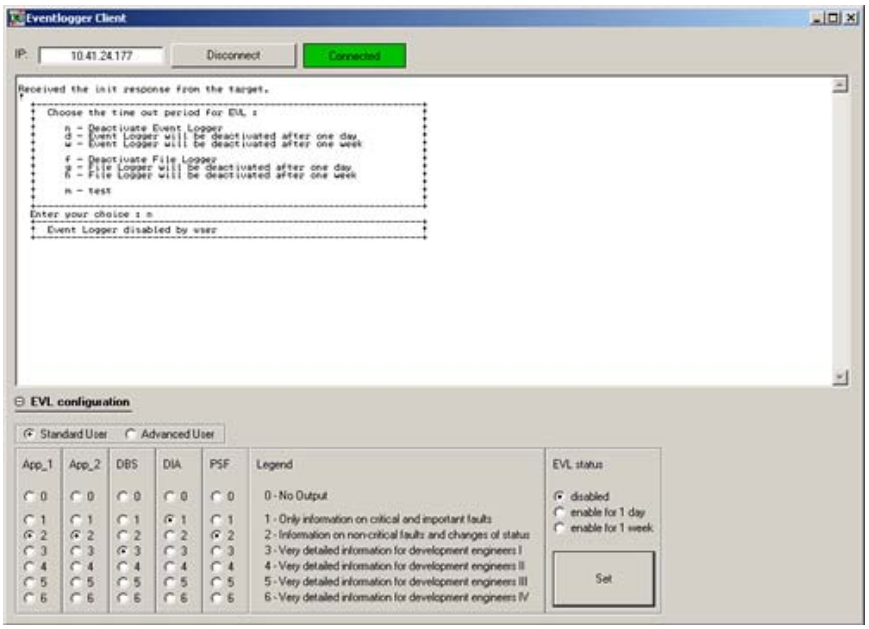

Figure 4.25 Event logger client

A default configuration is displayed in the “Standard User” view with a predefined frozen configuration. Under an “Advanced User” view, a specific configuration can be adjusted.

NOTICE: The default configuration suffices for most cases. The advanced configuration is recommended for development purposes only.

4.4.11.1. Filtering of the event logger output

The following main information can be activated.

Application 1:	Information regarding the protocol on the 500CIM06
Application 2:	2nd protocol on the 500CIM06 card
Database:	Information about the databank diagnosis
Application:	Information of the diagnostic application
PSF Application:	Information of the PSF application

Different priorities can be assigned to each main information, which has varied detail levels:

Priority 0 → No output

Priority 1 → Critical and very important information
Collateral fault information for minor und major errors.

Priority 2 → Non-critical and status change information
Minimum information regarding the communication configuration resp. protocols, start of communication congestion and negative acknowledgement of system commands - (e.g. Rejection of a session setup).

Priority 3 → Extremely detailed information
Useful information for the development team

4.4.12. Setting the system time

The hardware clock starts as soon as the software is downloaded to the processor, but is not set to the proper time. The CPU time is adjusted with the aid of DIS581. To correct the date and time, select the menu Tools → Set Time.

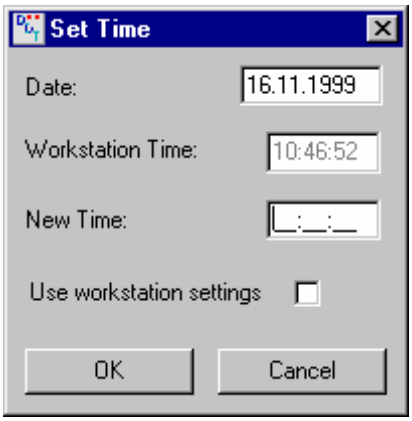

Figure 4.26 Dialogue for setting the date and time

The formats for date and time are dd.mm.yyyy, respectively hh:mm:ss.

The message "*System time has been set*" is displayed and has to be acknowledged by clicking on *OK*.

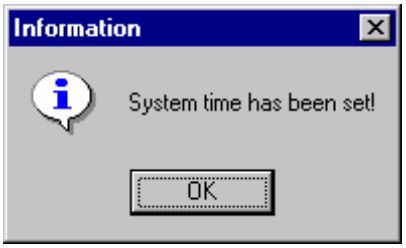

Figure 4.27 Acknowledgement that the time has been set

NOTICE: If the COM581 system time has not been set previously, the device has to be in operation for at least an hour after synchronization using either DIS581 or a radio clock (LON, IEC61850), because the system time is only implemented at the full hour.

5. CONFIGURATION

5.1. Configuration (CAP581)

The procedure for configuring the database and setting is described in the user manuals for CAP581 (see Operating Instructions CAP581 1MRB520184-Uen).

6. ERECTION AND INSTALLATION

6.1. General

The equipment must be shipped, stored and installed with the greatest care.

Choose the place of installation such that the optical interface and the controls on the front of the device are easily accessible.

Air must circulate freely around the equipment. Observe all the requirements regarding place of installation and ambient conditions given in the COM581 Data Sheet, 1MRB520206-Ben.

Take care that the external wiring is properly brought into the equipment and terminated correctly and pay special attention to grounding. Strictly observe the corresponding guidelines contained in this section.

6.2. Safety instructions

Modules and units may only be replaced by correspondingly trained personnel. Always observe the basic precautions to avoid damage due to electrostatic discharge when handling the equipment.

In certain cases, settings have to be uploaded before replacement and downloaded to the new unit after replacement. It is therefore assumed that the personnel who replace modules and units are familiar with the use of the operator program on the service PC.

DANGER: Only insert or withdraw power supply units 500PSM03 while the supply is switched off. To this end, place the switch on the power supply units in the off position and withdraw the green plug on the supply cable. It is not sufficient simply to turn the supply off at the switch.

WARNING: Only insert or withdraw the other units while the power supply units 500PSM03 are switched off.

WARNING: The units of the COM581 may only be inserted in the slots designated in Section 3.1.2.1 . Components can be damaged or destroyed by inserting units in the wrong slots.

DANGER: Improper handling of the equipment can cause damage or an incorrect response of the equipment itself or the primary plant.
Example: False tripping of a circuit-breaker

WARNING: Industry packs and ribbon cables may only be replaced or the positions of switches (on module 500SCM02) changed on a workbench appropriately designed for working on electronic equipment. The COM581 boards, bus backplanes and display units are sensitive to electrostatic discharge when not in the unit's housing.

The basic precautions to guard against electrostatic discharge are as follows:

- Should modules have to be removed from COM581 units installed in a grounded cubicle in an HV switchgear installation, discharge yourself by touching station ground (the cubicle) beforehand.
- Only hold electronic boards at the edges, taking care not to touch the components.
- Only work on units that have been removed from the cubicle on a workbench designed for electronic equipment and wear a grounded wristband. Do not wear a grounded wristband, however, while inserting or withdrawing units.
- Always store and ship electronic units in their original packing. Place electronic parts in electrostatic screened packing materials.

DANGER: After replacing units, be sure to check that the same configuration is loaded as before the replacement. If this is not the case, there is a danger of the device being damaged, unintended operation of switchgear taking place or of interlocks not functioning correctly. Persons may also be put in danger.

6.3. Checking the shipment

Check that the consignment is complete immediately upon receipt. Notify the nearest ABB company or agent should departures from the delivery note, the shipping papers or the order be found.

Visually inspect all the material when unpacking it. Where their is evidence of transport damage, lodge a claim immediately in writing with the last carrier and notify the nearest ABB company or agent and also

ABB Switzerland Ltd
Power Systems
Repair Center
Terminal CA
CH-5400 Baden
Switzerland

If the equipment is not going to be installed immediately, store all the parts in their original packing in a clean dry place at a moderate temperature. The humidity should not exceed 95% at a maximum temperature of +40 °C; the permissible storage temperature range in dry air is –40 °C to +85 °C.

6.4. Erection

6.4.1. Material required

All the small parts needed are included in the installation kit.

A suitable drill and spanners are required to secure the cubicles to the floor using the plugs provided (if COM581 is mounted in cubicles).

6.4.2. Relay location and ambient conditions

The place of installation should permit easy access especially to front of the device, i.e. to the optical fiber cable connector and the local control unit.

There should also be free access at the rear of the equipment for additions and replacement of electronic modules.

Since every piece of technical equipment can be damaged or destroyed by inadmissible ambient conditions, such as:

- the location should not be exposed to excessive air pollution (dust, aggressive substances),

- severe vibration, extreme changes of temperature, high levels of humidity, surge voltages of high amplitude and short rise time and strong induced magnetic fields should be avoided as far as possible,
- air must be allowed to circulate freely around the equipment.

The equipment can in principle be mounted in any attitude, but it is normally mounted vertically (operation of the local control unit and visibility of markings).

In all other respects, observe the limits and ranges given in the COM581 Data Sheet, 1MRB520206-Ben.

6.4.3. Installation of cubicles

In the case of equipment supplied in cubicles, place the cubicles on the foundations that have been prepared. Take care while doing so not to jam or otherwise damage any of the cables that have already been installed. Secure the cubicles to the foundations.

6.5. Installation

6.5.1. Grounding guidelines

Switching operations in HV installations generate transient overvoltages on control signal cables. There is also a background of electromagnetic RF fields in electrical installations that can induce spurious currents in the devices themselves or the leads connected to them.

All these influences can influence the operation of electronic apparatus.

On the other hand, electronic apparatus can transmit interference that can disrupt the operation of other apparatus.

In order to minimize these influences as far as possible, certain standards have to be observed with respect to grounding, wiring and screening.

NOTICE: All these precautions can only be effective if the station ground is of good quality.

6.5.2. Cubicle Grounding

Mechanical design

The cubicle must be designed and fitted out such that the impedance for RF interference of the ground path from the electronic device to the cubicle ground terminal is as low as possible.

Metal accessories such as side plates, blanking plates etc., must be effectively connected surface-to-surface to the grounded frame to ensure a low-impedance path to ground for RF interference. The contact surfaces must not only conduct well, they must also be non-corroding.

If the above conditions are not fulfilled, there is a possibility of the cubicle or parts of it forming a resonant circuit at certain frequencies that would amplify the transmission of interference by the devices installed and also reduce their immunity to induced interference.

6.5.2.1. Grounding a casing in a cubicle

Movable parts of the cubicle such as doors (front and back) or hinged equipment frames must be effectively grounded to the frame by three braided copper strips (see Figure 6.1).

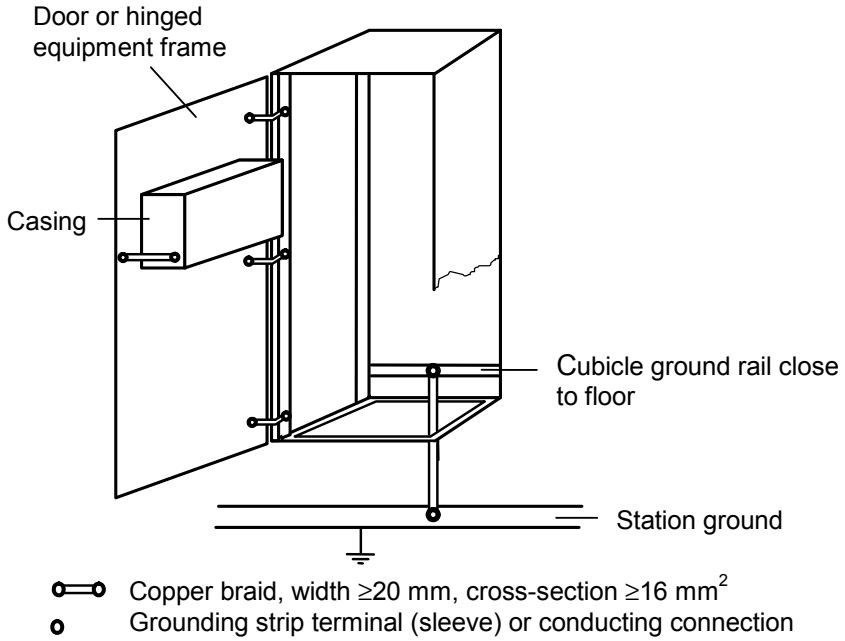

Figure 6.1 Cubicle grounding system

The metal parts of the cubicle housing and the ground rail are interconnected electrically conducting and corrosion proof. The contact surfaces shall be as large as possible.

For metallic connections please observe the voltage difference of both materials according to the electrochemical code. The greater the voltage difference, the greater the danger of electrochemical corrosion.

The cubicle ground rail must be effectively connected to the station ground rail by a grounding strip (braided copper, see Section 6.5.2.4.).

Where the two ground rails are more than 5 m apart, two grounding strips must be run parallel and as close as possible to each other.

6.5.2.2. Mounting in an open frame

An open frame must be electrically conducting, corrosion-proof and properly connected to the station ground (see Figure 6.2).

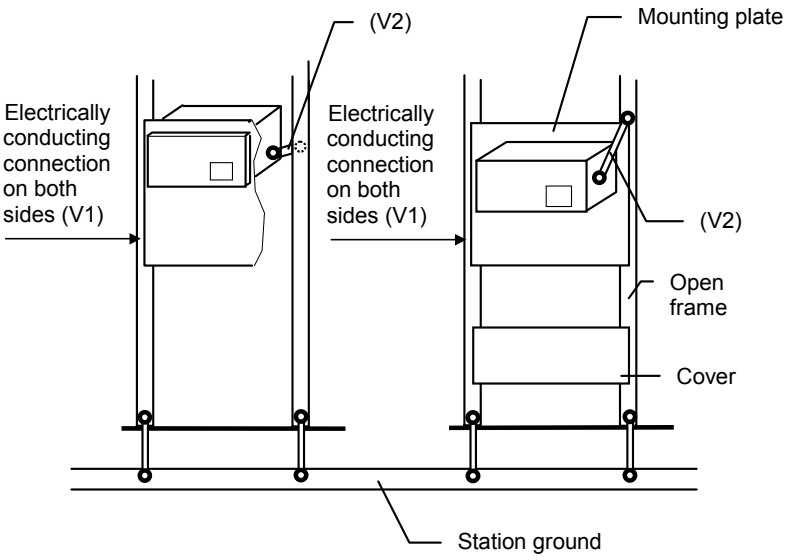

Figure 6.2 Methods of grounding units in open frames (front view, semi-flush and surface mounting)

Device grounding version 1 (V1 see Figure 6.2)

If the devices or electrical equipment racks (and mounting plates or covers if used) have a tight, extensive corrosion proof and electrically conducting connection to the cubicle metal, there is no need for grounding straps, even if ground connection screws and labels are attached to the device.

Device grounding version 2 (V2 see Figure 6.2)

The units must be grounded directly to the rack frame as shown in Figure 6.2, if the contact surfaces are poor conductors, or to the mounting plate, as shown in Figure 6.6 in Section 6.5.3.1, providing the surfaces are good conductors, as defined under Version 1. The units must be grounded such that the grounding strips are as short as possible.

As described in Section 6.5.2.1, a **second** grounding strip must be run in parallel if the station ground is more than 5 m away.

6.5.2.3. Ground connection on the device

Grounding strips may be attached to the left or to the right of rack. Take care that the grounding strip is always as short as possible.

Should the designated ground terminal be in an awkward position, the braided copper strip can be connected at some other more favorable point. The main thing is that the device is only grounded at one point (see Figure 6.3). Grounding loops from unit to unit are not allowed.

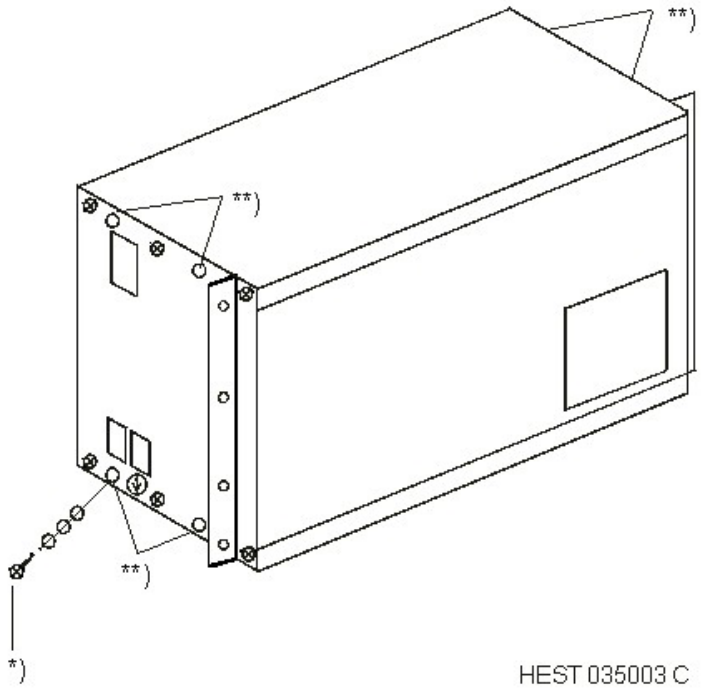

*) Grounding parts supplied with the device

**) The braided copper strip can be connected to one of these points

Figure 6.3 RF ground connection to a single device

6.5.2.4. Grounding strips (braided copper) and their installation

High frequency currents are produced by interference in the ground connections and because of skin effect at these frequencies, only the surface region of the grounding strips is of consequence.

The grounding strips must therefore be of (preferably tinned) braided copper and not round copper conductors, as the cross-section of round copper would have to be too large.

Data of braided copper strip:

Width ≥ 20 mm,
Cross-section ≥ 16 mm^2 (necessary for protection grounds).

Proper terminations must be fitted to both ends (press/pinch fit and tinned) with a hole for bolting them firmly to the items to be connected.

The surfaces to which the grounding strips are bolted must be electrically conducting and non-corroding.

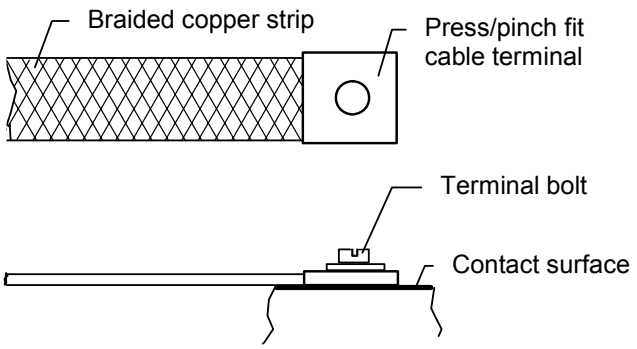

Figure 6.4 Ground strip and termination

CAUTION: In the case of **aluminum** contact surfaces, a **cupal disc** (copper-plated aluminum) must be fitted between the lug and aluminum to prevent corrosion.

6.5.3. Guidelines for wiring on site

6.5.3.1. Fitting the braided copper strip and contact spiral

Execute the following procedure carefully:

1. Remove the outer plastic sheath from a sufficient length of the end of the cable.
2. Undo the braided screen over a length equal to the width of the contact coil and the cable clamp, see 5 below).
3. Carefully fold the loosened braiding backwards.
4. Wrap the braided copper strip around the full length of the stripped screen.
5. Slide the contact spiral over the copper braiding and the cable screen underneath it.
6. Fit the cable clamp between the end of the plastic sheath and the contact spiral. This effectively grounds the cable screen to the ground rail or the station ground (see Figure 6.6)

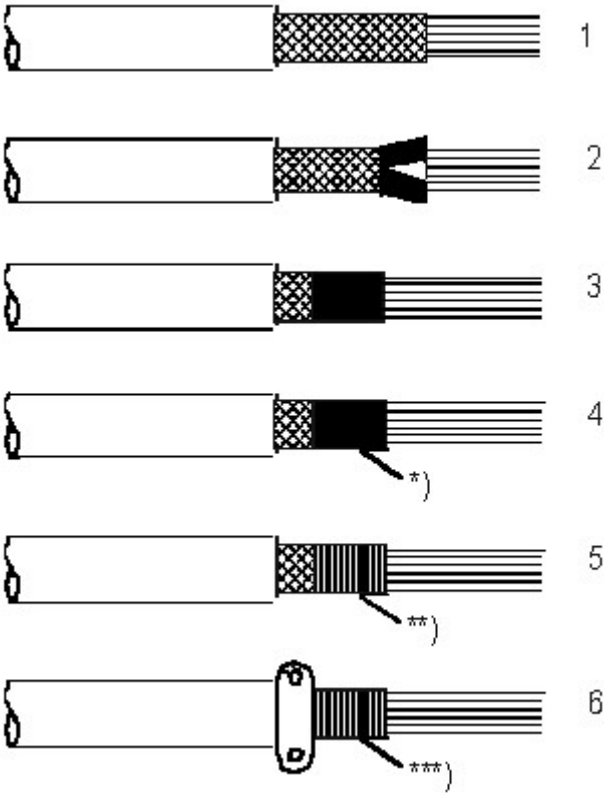

*) Braided copper strip “Scotch 24”
**) Contact spiral
***) E.g. cable clamp to secure the cable to the ground rail

Figure 6.5 Fitting the braided copper strip and contact spiral to the end of a cable

Screens in the case of open frames are also secured by a clamp to the mounting plate close to the device as shown in Figure 6.6.

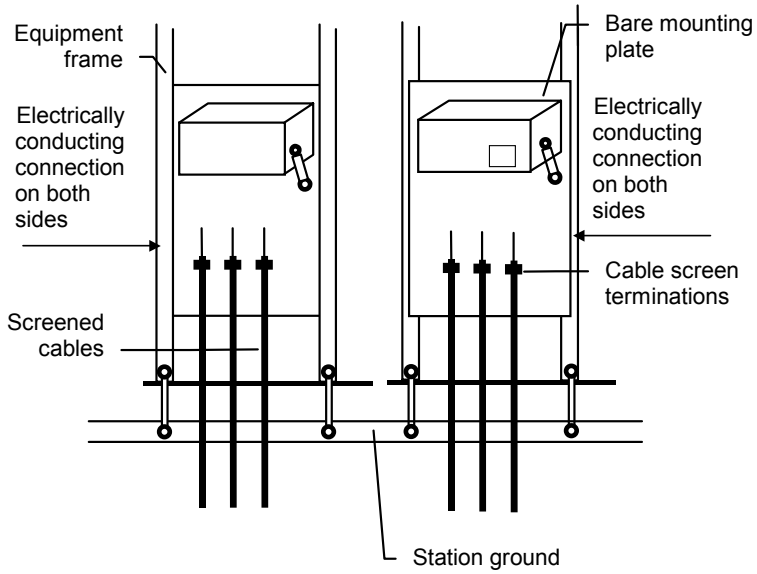

Figure 6.6 Cable screen terminations in open equipment frames (rear view for semi-flush mounting, front view for surface mounting)

The unscreened ends of the cores going to the device terminals must be kept as short as possible and the groups of cables should be run separately.

6.5.3.2. Optical fiber cables

Instructions for shipping and storing optical fiber cables are given in Section 10.2.

Laying cables

Pay attention when laying optical fiber cables not to bend or twist them when unrolling them or to damage the protective caps etc., on the ends. Should in spite of taking all precautions, a cable be damaged, it must be repaired immediately. Strictly observe the minimum permissible bending radius.

WARNING: The bending radius influences the attenuation of an optical fiber cable.

Since depending on its mechanical constructions, the characteristics of an optical fiber cable are influenced to a greater or lesser extent by the ambient temperature, the temperature must be taken into consideration when determining the route. The temperature conditions for laying or rewinding an optical fiber cable are only fulfilled, if the cable was not exposed to a temperature outside the permissible range during the preceding 12 hours.

WARNING: It is recommended that optical fiber cables be laid in plastic cable ducts.

Fitting cable connectors

Refer to the instructions provided with the installation kit for the procedure for fitting cable connectors to optical fiber cables.

6.5.4. Power dissipation and temperature rise

Attention must be paid that the temperature rise of the device itself and the remainder of the cubicle remains within the permissible limits during operation.

WARNING: Excessively high temperature can appreciably reduce the operating life of the COM581.

The table below lists the power dissipation of the COM581 for a few sample configurations.

Sample calculations for COM581 power dissipation		NCC COM581						IEC103 COM581 with max. number of star-coupler boards					
		2 CPU's		4 CPU's		6 CPU's		2 CPU's		4 CPU's		6 CPU's	
Board	Power dissipation Pv in Watt	Qty.	Pv	Qty.	Pv	Qty.	Pv	Qty.	Pv	Qty.	Pv	Qty.	Pv
Backplane CUB02	1.4	1	1.4	1	1.4	1	1.4	1	1.4	1	1.4	1	1.4
LMI	0.3	1	0.3	1	0.3	1	0.3	1	0.3	1	0.3	1	0.3
CPU03	9	2	18.0	4	36.0	6	54.0	2	18.0	4	36.0	6	54.0
Star-coupler SCM02	2	0	0.0	0	0.0	0	0.0	12	24.0	12	24.0	12	24.0
Total power dissipation Pv			19.7		37.7		55.7		43.7		61.7		79.7
Power supply unit PSM03 efficiency factor 1.3		1.3 *	19.7	1.3 *	37.7	1.3 *	55.7	1.3 *	43.7	1.3 *	61.7	1.3 *	79.7
Total power dissipation per COM581			**25.6**		**49.0**		**72.4**		**56.8**		**80.2**		**103.6**

Table 6.1 Examples of power dissipation and temperature rise for different device configurations (without star coupler)

The following table extra star couplers have been considered for the integration of IEC103 devices.

Sample calculations for COM581 power dissipation		IEC103 COM581 with max. number of star-coupler boards							
		2 CPUs		4 CPUs		6 CPUs		9 CPUs	
Board	Power dissipation Pv in Watt	Qty.	Pv	Qty.	Pv	Qty.	Pv	Qty.	Pv
Backplane CUB03	1.4	1	1.4	1	1.4	1	1.4	1	1.4
LMI	0.3	1	0.3	1	0.3	1	0.3	1	0.3
CPU03	7.5	2	15.0	4	30.0	6	45.0	9	67.5
Star-coupler SCM02	3	8	24.0	8	24.0	8	24.0	8	24.0
Total power dissipation Pv			40.7		55.7		70.7		93.2
Power supply unit PSM03 efficiency factor 1.3		1.3 *	40.7	1.3 *	55.7	1.3 *	70.7	1.3 *	93.2
Total power dissipation per COM581			**52.9**		**55.7**		**70.7**		**93.2**

Table 6.2 Examples of power dissipation and temperature rise for different device configurations (with star coupler)

Installing a fan can prevent thermal hot spots. Whether an additional fan is necessary or not depends on the following criteria:

- specified max. ambient temperature 45 °C or 55 °C

- cubicle protection class IP40 or IP54
- single cubicle or several adjacent cubicles

In consideration of the above, the following rule can be defined:

Rule for 55° ambient temperature and protection class IP54

A fan is mandatory for a power dissipation higher than **120 Watt per cubicle** including all the units in the cubicle under consideration.

Rule for 45°C ambient temperature and protection class IP54

A fan is mandatory for a power dissipation higher than **240 Watt per cubicle** including all the units in the cubicle under consideration.

Rule for 55°C ambient temperature and protection class IP40

A fan is mandatory for a power dissipation higher than **200 Watt per cubicle** including all the units in the cubicle under consideration.

Rule for 45°C ambient temperature and protection class IP40

A fan is mandatory for a power dissipation higher than **380 Watt per cubicle** including all the units in the cubicle under consideration.

Recommended fans

Where additional fans have to be installed in cubicles, the following type is recommended:

- 500LFT01 (24 V)
  Part No. 1MRB150012R1
- A thermostat is also available on order.

7. COMMISSIONING

7.1. Safety instructions

DANGER: Protection/communication devices and systems control switchgear in power plants and substations.

Danger exists when current circuits are interrupted.

Danger exists when measured variables are invalid, since contact with the input terminals is interrupted.

Plug-in units may only be inserted or withdrawn when the power supply unit 500PSM0x is switched off.

7.2. Procedure

The following points give erection personnel and commissioning engineers an insight into the operations which have to be performed while commissioning the gateway COM581. The sequence is only a proposal and may be varied (see Section 3)

Housing/rack:

- Assemble the housing.
- Install the housing in the cubicle.
- Attach the electrical ground to the housing.
- Ground the local HMI and insert it in the appropriate connector on the back plane.
- Install the power supply unit.
- Connect the power supply unit.

CPU boards:

- All CPU cards (500CIM06) are identical HW wise for the COM581.
- No jumpers or any other specific settings have to be done on the CPU card.
- Only for the LON CPU card, the LON module (500LBI02) has to be plugged in.
- Insert the 500CIM06 card into the designated slots
- Secure the boards.

SCM:

- Set the DIL switches as required by the configuration.

Software:

- Load the basic software into the device. **
- Load the database and configuration. **

Miscellaneous:

- Connect the optical fiber cable pairs.
- Connect the remote control cables.

7.3. Checks prior to switching on

Check the following before switching the gateway COM581 on:

- If SCM02 is in use, are the DIL switches correctly set?
- Are the sub-units in the correct positions on the processing units?
- Are the 500CIM06 boards in the correct slots?
- Are the power supply units correctly connected?
- Is the supply to the power supply units adequately rated?
- Is the COM581 housing properly grounded?
- Is the LMI properly grounded and plugged into the correct connector on the back plane?
- Have all the boards and units been secured?
- Has the basic COM581 software been downloaded? **
- Have the database and the configuration been downloaded? **

** A COM581, delivered to a customer already contains the basic software and the project database including the necessary setting.

7.4. Checks after switching on

When a system with a frontplate control and display unit (LMI) is initialized, the background illumination switches on after a short time, and all the LEDs flash. At the end of the initialization procedure, the following text appears on the display:

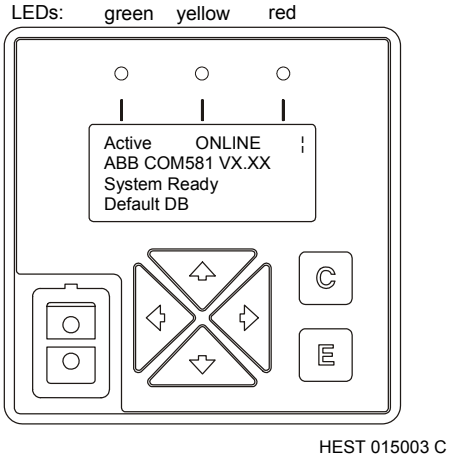

Figure 7.1 “System ready” display

Now the green standby LED lights to show that the system has been successfully initialized.

NOTICE: The time required for the unit to start depends on the size of the database (number of signals) and can take 30 s to 5 min.

Should an attempt be made to initialize the system with the wrong configuration, an error message appears in the event logger output.

If the configuration (project database) has not been downloaded to the COM581, the system starts with a default database and after the initialization procedure, the “Limited Ready” status is displayed in the LMI.

NOTICE: If COM581 does not adopt the Limited ready mode automatically, press the downwards arrow several times in the "Sync 6" status to force COM581 into the Limited ready mode. A database can now be downloaded to the device.

Carry out the following quick checks, if the COM581 should not initialize successfully (i.e. *System ready* not being displayed):

Reset button: The left-hand LED must flash when the reset button on the IMP (Master) is pressed. If this is not the case, the probability is that the default database did not load properly.

By pressing the reset button on the IMP (Master) resets all the boards in the COM581 housing. After a reset, the COM581 restarts automatically, while the LMI keeps the text, which was indicated before the reset for a certain time (approx. 30-40s). After this time, the text is refreshed according the respective restart status.

Check the following after switching on the COM581:

- Is COM581 in the System ready or limited ready mode?
- Has the basic software been loaded properly?
- Have the database and the configuration been loaded properly?
- Have the optical fiber cable pairs been connected correctly?
- Are the remote control cables correctly made up and connected?
- Are the interface settings correct?

7.4.1. Checking the watchdog contact

Watchdog: To check the watchdog contact in the PSM03 power supply unit, press the reset button on the IMP (Master) and listen for the clicking of the contact.

7.4.2. Checking the configuration (signals)

Where it is considered necessary to check the signals, the DIS581 tool provides facility for forcing the statuses and recording of signals.

Refer to Sections 4.4.9 and 4.4.10 for the procedures for “Protocol monitoring” respectively “Signal forcing”.

8. OPERATION AND MAINTENANCE

8.1. Introduction

COM581 includes continuous comprehensive self-supervision and diagnosis of the software and hardware components.

NOTE: Normal operation without any faults is also indicated by the fact that only the green LED lits on he local HMI (see Section 8.2.2.1).

A system failure is indicated, when the green LED is not lit or flashing (e.g. hardware failure).

WARNING: Should a system failure be indicated, inform the trained maintenance personnel responsible.

8.1.1. Safety instructions

WARNING: Checks and maintenance on the COM581 may only be carried out by properly trained personnel.

WARNING: Only **properly** trained and authorized personnel should be allowed to use **COM581 Tools/ Software** for the **system configuration process**.

8.2. Frontplate control and display unit (local HMI)

8.2.1. General

The control and display unit is fitted in the frontplate of the gateway COM581. It comprises a four-line LCD, LEDs and 6 control buttons.

An optical interface is provided for communicating with a PC.

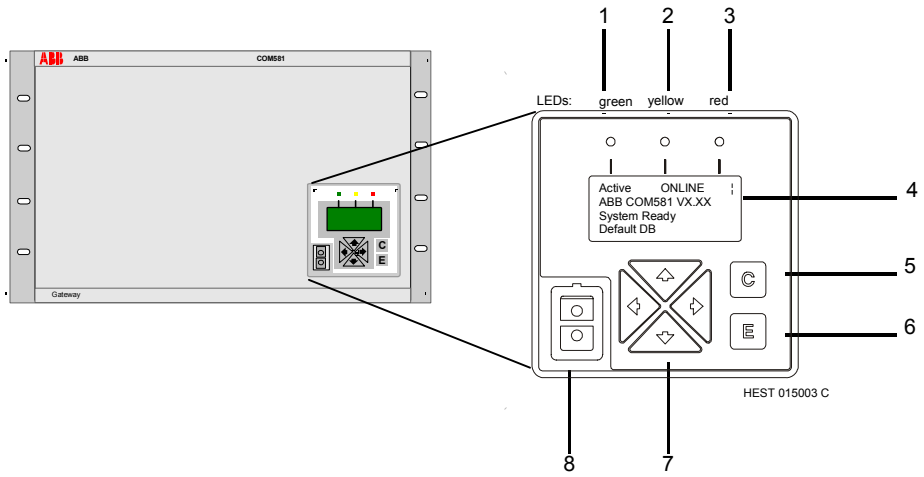

Figure 8.1 The control and display unit (local HMI) in the frontplate of the gateway COM581

1. Green LED indicates that the gateway is standing by
2. Yellow LED indicates that the device is in the Limited ready mode
3. Red LED which serves no function while the COM581 is standing by
4. Four-line LCD for displaying system information in different windows
5. Delete button (C) for closing windows
6. Enter button (E) for selecting the active window
7. Cursor buttons for navigating through the menu structure
8. Electrically insulated interface (see Section 11.1.1) for exchanging data between the gateway and a PC and loading a database using the DIS581

8.2.2. Signals during normal operation

The green, yellow and red LEDs signal the status of the gateway. Each of them can be in one of three possible states: off, flashing or continuously lit.
All three flash while the system is initializing.

Should none of the LEDs be lit, either the gateway is not standing by or the application software is inactive or not installed.

8.2.2.1. Green LED

The green LED (see Figure 8.1, Item 1) only lights when the system has initialized properly and the gateway is standing by (normal operating status). It shows that the gateway is operational and the application software is active. The device is either

switched off, starting up or defective when the green LED is not lit or flashing.

8.2.2.2. Yellow LED

The yellow LED (see Figure 8.1, Item 2) flashes to show that the gateway is in the *Limited ready* mode. The target COM581 system has to be in this mode before the project database can be downloaded to it.

8.2.2.3. Red LED

The red LED (see Figure 8.1, Item 3) is not used and does not light during normal operation of the gateway.

8.2.2.4. Four-line LCD

System information is displayed on the four-line LCD.
The functions of the three LEDs are shown on the top line while the other three lines describe the current status of the device.

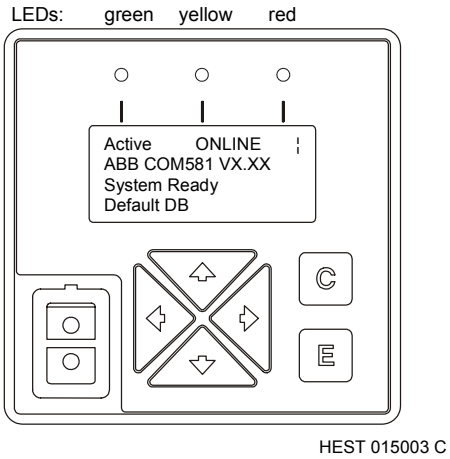

Figure 8.2 Display on the four-line LCD in normal operation

8.2.3. Operating procedures

8.2.3.1. Start up

When the COM581 is energised, the software on all the boards starts at the same time. At what are referred to as synchronisation points, the slaves send a signal to the master board. The synchronisation points are indicated on the LCD.

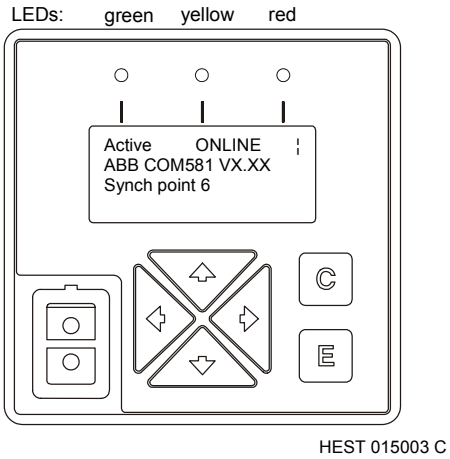

Figure 8.3 Display on the local HMI at synchronisation point 6

The following stages of initialisation are gone through during the start-up procedure:

1. Typical start sequence with a configured database

- sync point 4
- sync point 6
- sync point 8
- sync point 12
- start application
- set ready application
- system ready

2. Typical start sequence in the *Limited ready* mode

- sync point 4
- sync point 6
- sync point 8
- sync point 12
- (Limited ready)

8.2.3.2. Buttons

If the background illumination is switched off, press any button to switch it on. It switches off automatically if none of the buttons on the control and display unit is pressed for about 10 minutes. Pressing a button to switch the background illumination on does not delete any display.

E button

Pressing the E button switches to the next item in the menu structure.

C button

The C button switches directly back to the main display.

Arrow buttons

The buttons <↑> and <↓> are used to scroll through displays comprising more than four lines and the buttons <←> and <→> are for moving through the menu structure a step at a time.

***Limited ready* mode:**

By pressing the "↓" button as soon as synchronization point 6 is displayed during the start-up routine, the COM581 starts in the *Limited ready* mode.

Hold the "↓" button depressed until an exclamation mark appears in the bottom left-hand corner of the LMI display. The unit has to be in this operating mode, otherwise it is impossible to download a database to the COM581 via the optical interface.

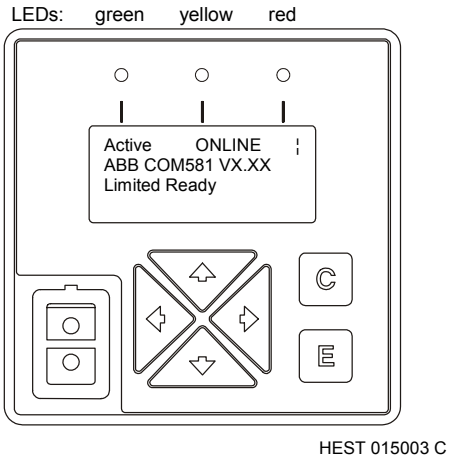

Figure 8.4 Display on the local HMI in the "Limited ready" mode

8.2.3.3. Basic display

After the processor has started, the following display appears on the LMI:

first line → explains the functions of the LEDs
second line → indicates the COM581 Version
third line → indicates the current Status of the COM581
fourth line → indicates the project database loaded to the COM581 (initially the Default DB)

In the top right-hand corner of the display there is a bar, which rotates continuously to show that the CPU board is operating correctly.

Once the system has started, the following appears on the LCD:

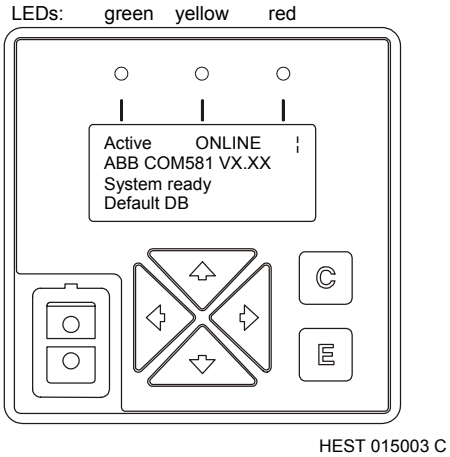

Figure 8.5 Four-line display on the local HMI during normal operation

The main menu is opened by pressing the <E> button.

8.2.3.4. Main menu

The main menu offers all the submenus and lists for selection. The up and down arrow keys move up, respectively down a line in the menu structure. The menu item that is underlined is selected and can be opened by pressing either the <E> button or the right arrow key. Press the <C> button or the left arrow button to return to the main menu.

The main menu provides a choice of the following submenus:

- Major Error
  no entry

- COM581 Ready
  COM581 ready at
  2005-06-10 13:50
- Time
  2005-06-10 16:30
  valid
- conf. Download
  configuration Download at
  2005-06-10 15:00
- Minor Error

  Minor Error 1
  Minor Error x
- CPU

  CPU 1
  CPU 1: IMP
  Base Vx.xx
  Protocol xx Vx.xx
  Node Id = x
  Device Id = x

  CPU 2
  CPU 3
  CPU 4
  CPU 5
  CPU 6

8.2.3.5. Submenus

A submenu is opened by selecting it from the main menu. Press the left arrow key to move up one level in the menu structure or the <C> button to return to the basic display.
The procedure for selecting and opening items in the submenus is the same as for the main menu.

Menu item *Major Error*

Press the <E> button once to view the last error that caused the gateway to reset.

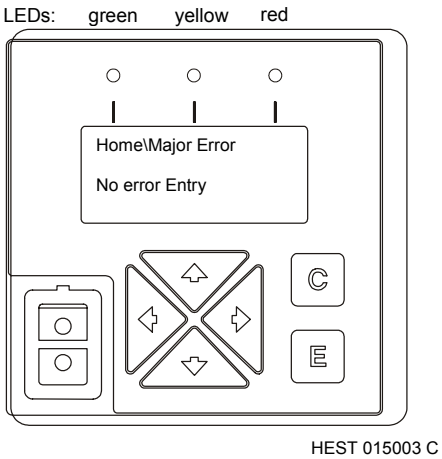

Figure 8.6 Display on the local HMI showing the last major error

Menu item *COM581 Ready*

Press the <E> button once to view the date and time when COM581 was last started.

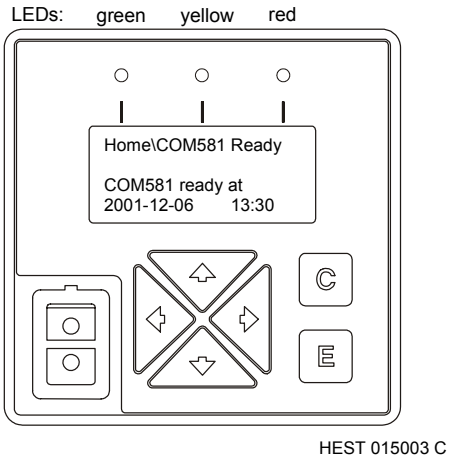

Figure 8.7 Display on the local HMI of the date and time when COM581 was last started

Menu item *Time*

Pressing the <E> button once in the *Time* menu displays the current time of the COM581 with the flag invalid or valid.

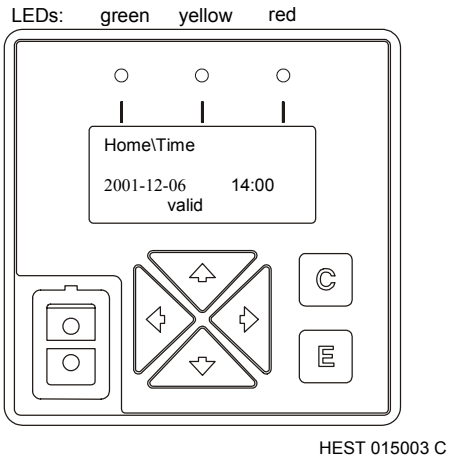

Figure 8.8 Display on the local HMI of the current time

Menu item *Conf. Download*

Pressing the <E> button once in this menu displays the last time the configuration was downloaded to the COM581.

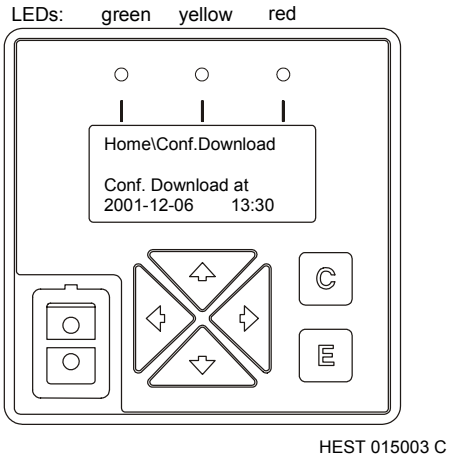

Figure 8.9 Display on the local HMI of the last time the configuration was downloaded

Menu item *Minor Error*

Pressing the <E> button the first time opens the submenu *Minor Error* with a list of the last 500 minor errors which have occurred. The individual minor errors can be selected using the arrow keys <↑> and <↓> and the respective dates and times viewed by pressing the <E> button or the arrow button <–>, providing the diagnostics function is loaded on the IMP Master.

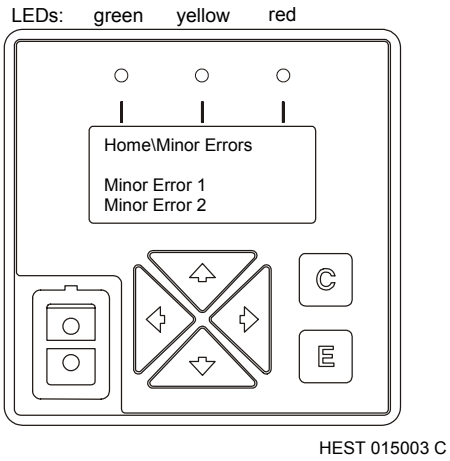

Figure 8.10 Display on the local HMI of minor errors

NOTICE: New errors cannot be registered for as long as the menu item Minor Errors is open.

Menu item *CPU*

This submenu is opened by selecting it and pressing the <E> button once. It displays a list of up to 6 configured CPU boards in the COM581 housing.

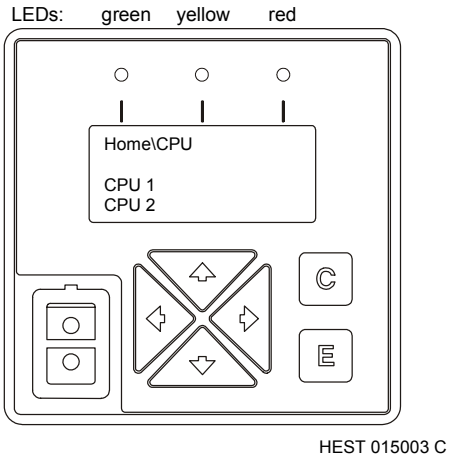

Figure 8.11 Display on the local HMI of the list of configured CPU boards

Select one of the CPU boards and press the <E> button again or the right arrow to view its settings.

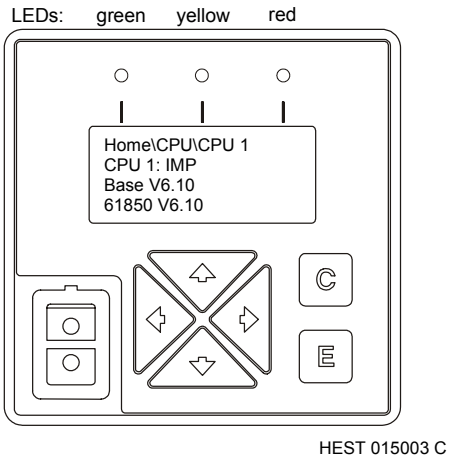

Figure 8.12 Display on the local HMI of the configuration of CPU-1

The following CPU settings can be viewed by opening this menu:

- Version of the basic software
- Version of the application software (in this case IEC101)
- Node ID for the respective board
- Device ID for the respective board

8.3. Maintenance

8.3.1. Regular functional check

A regular functional check of the device is unnecessary.

8.3.2. Maintenance schedule

The device does not require any maintenance.

8.4. Programming the LON chip

NOTICE: The LNT is not needed for any of the gateway settings. Subnet and node addresses are transferred from the database to the LON chip every time the system is initialised. Other settings such as buffer, network variables and time synchronisation selectors are fixed codes entered in the LON chip.

NOTICE: Never change the settings of the neuron puffer, because it can disrupt the LON connection and the neuron cannot be accessed via the network.

8.5. Assigning subnet and node

The maximum number of nodes in a subnet is limited by the number of signals which can be transferred to Micro SCADA or COM581.

NOTICE: COM581 should have a line for every subnet to restrict the transfer of data to a single line.

NOTICE: The LNT is not needed for any of the gateway settings. Subnet and node addresses are transferred from the CAP851 database to the neuron chip every time the system is initialized. Other settings are overwritten whenever the COM581 is restarted.

8.6. Synchronizing COM581 time via LON

8.6.1. Synchronizing LON with a VATS bit pattern

The time setting of the IMP (Master) is synchronized via LBI on the LON bus. Only a VATS bit pattern is supported.

NOTICE: The LNT is not needed for any of the gateway settings. The synchronization parameters are transferred from the database to the neuron chip every time the system is initialized.

8.6.2. Default network variable settings for time synchronization

The table below shows the default configuration settings of the network variables for time synchronization using a VATS bit pattern.

Idx	Priority	Direction	Selector	Tmamd	Service	Authent.
2	Yes	IN	2FF2	No	UNACKD	No

Figure 8.13 NV configuration table for time synchronization

9. FAULT-FINDING

9.1. *Safety instructions*

WARNING: All work on the **COM581 Gateway** must be carefully planned. Errors when manipulating the system cannot only destroy components, they can also cause serious interruption to the power supply.
Modules that have been replaced may only be repaired by the manufacturer.

DANGER: Precautions must be taken in the immediate area when working on the **COM581 rack** to exclude any possibility of persons coming into contact with live parts.
A danger of electrical shock also exists when measuring currents and voltages (see Section 9.5).

DANGER: When **replacing electronic modules**, take the necessary precautions to prevent damage to components due to electrostatic discharge (ESD) (see Section 9.5).

9.2. *Locating COM581 faults*

The gateway COM581 generates a serial output text that enables faults that have occurred to be viewed or configuration errors to be located and analyzed.

9.2.1. *Event logger output*

The event logger enables the user to detect configuration, or communication errors, or errors in communication between two devices, during testing or commissioning. For further information about the event logger see Section 4.4.11 “Event logger” or online help in the DIS581.

9.2.2. Reading error messages on the local HMI

The last major error and the last 500 minor errors are displayed on the COM581's LCD together with the following information:

Subsystem	Software subsystem in which the error occurred (e.g. MDP)
Error code	Qualifying error code (1..255)
CPU module	Designation of the CPU module on the VME bus on which the error occurred (device ID)
Error date	Date and time when the error occurred in the following format: "YYYY-MM-DD HH:MM", e.g.: 2001-12-06 22:30

The last 500 minor errors, which occurred, can be viewed via submenu *Minor Errors*.

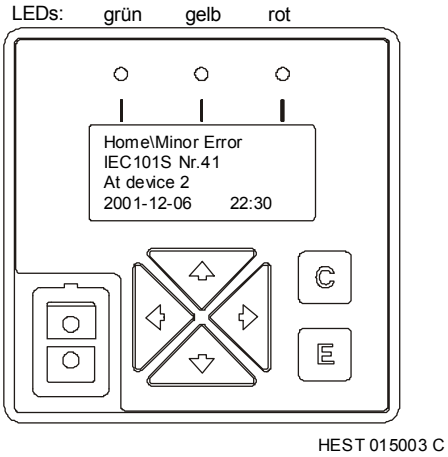

Figure 9.1 Display of minor errors on the local HMI

The last major error can be viewed via submenu *Major error*.

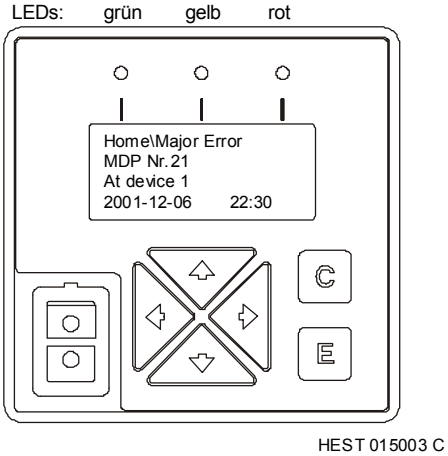

Figure 9.2 Display of major errors on the local HMI

9.2.2.1. List of possible error messages before "Shutdown" or "Reset"

The following error messages are generated by the system supervision function and displayed for about 5 seconds on the LMI before “Shutdown” or “Reset”:

Error No.	Error code	Significance and EVL output
1	Error Number 001	Master is running on a board which is not VME System Controller
2	Error Number 002	Timeout => One Slave not announced...
3	Error Number 003	The Slave Boards are not synchronized... (Number of CPUs incorrect, database has a different protocol)
4	Error Number 004	Node IDs different in ICC...
5	Error Number 005	Node IDs different in ICC...
6	Error Number 006	Slave boards check failed after basic startup complete...
7	Error Number 007	Slave board did not execute the protocol startup sequence...
8	Error Number 008	Slave board did not execute the protocol startup sequence...
9	Error Number 009	Slave boards failed during basic startup...
10	Error Number 010	Master received unexpected state during basic startup...
11	Error Number 011	Slave Boards did not execute Start/Set_Ready Protocols...
12	Error Number 012	Wait for Download via LMI, but DAC is not assembled on board
13	Error Number 013	Slave board did not execute the “Shutdown” ...
14	Error Number 014	Slave boards did not execute “Slave_Node_Check” ...
15	Error Number 015	Slave boards did not execute “Slave_Node_Check_Detailed” ...
16	Error Number 016	Slave Boards did not execute “Recover” ...
17	Error Number 017	Slave boards do not recover ...
18	Error Number 018	Slave boards did not execute “System Ready” after recover ...
19	Error Number 019	Slave boards did not execute “Load_New” ...
20	Error Number 020	Slave boards did not execute “System_Ready” after “LOAD_NEW” ...
21	Error Number 021	Slave boards did not execute “Shutdown” ...

Table 9.1 “Major error” messages on the local HMI

9.2.2.2. List of possible error messages after a "Second Restart"

The following table (Table 9.2) shows all the error messages displayed on the LMI after a second restart is indicated.

Error No.	**Error name**	**Significance** (subsystems)
0	No_Error	**(RP571, MDP, DIA)**
11	Ial_Queue_Overflow_Ch_1	IAL Channel 1 queue full.
12	Ial_Queue_Overflow_Ch_2	IAL Channel 2 queue full.
13	Ial_Queue_Overflow_Ch_3	IAL Channel 3 queue full.
14	Ial_Queue_Overflow_Ch_4	IAL Channel 4 queue full.
15	Ial_Queue_Overflow_Ch_5	IAL Channel 5 queue full.
16	Ial_Queue_Overflow_Ch_6	IAL Channel 6 queue full.
21	Appl_Queue_Overflow_1	Application queue full.
22	Appl_Queue_Overflow_2	Application queue full.
23	Appl_Queue_Overflow_3	Application queue full.
24	Appl_Queue_Overflow_4	Application queue full.
25	Appl_Queue_Overflow_5	Application queue full.
26	Appl_Queue_Overflow_6	Application queue full.
31	Radio Clock not available	Radio clock not available.
41	external line 1 not available	Protocol application link disturbed (serial, Ethernet or backplane connection) 1. Protocol instance on the CPU.
42	external line 2 not available	Link to protocol application disturbed (serial, Ethernet or backplane connection) 2. Protocol instance on the CPU.
43	external line 3 not available	Protocol application link disturbed (serial, Ethernet or backplane connection) 3. Protocol instance on the CPU.
44	external line 4 not available	Protocol application link disturbed (serial, Ethernet or backplane connection) 4. Protocol instance on the CPU.
45	external line 5 not available	Protocol application link disturbed (serial, Ethernet or backplane connection) 5. Protocol instance on the CPU.
46	external line 6 not available	Protocol application link disturbed (serial, Ethernet or backplane connection) 6. Protocol instance on the CPU.
47	external line 7 not available	Protocol application link disturbed (serial, Ethernet or backplane connection) 7. Protocol instance on the CPU.

Error No.	**Error name**	**Significance** (subsystems)
48	external line 8 not available	Protocol application link disturbed (serial, Ethernet or backplane connection) 8. Protocol instance on the CPU.
50	LON line not available	Error occurred on the LON line.
52	unknown function	Type_Id or COT not defined.
53	Configuration error	Error caused by an illegal configuration.
54	VME Bus Error	Bus error on VME bus.
55	One Power Supply is down	One power supply has failed.
59	IBB_Time_Sync_Fail	No IBB connected (only for MVB and LON).
175	Configuration Error	Predefined exception configuration error occurred
176	Storage_Error	Predefined exception storage error occurred **(DBS).**
177	Set_Not_Ready_Error	Error while attempting Set_Not_Ready.
178	Subtask_Error	Another (sub-)task indicated an error.
179	Time_Exceeded	Waiting time for lower level device exceeded.
180	Set_Ready_Error	Error while attempting Set_Ready **(DIA).**
181	Shutdown_Error	Error during system shutdown **(DBS, MAC, EVP).**
182	Subtask_Lost	No response from a subtask during specified timeout.
183	Lower_Level_Error	Error occurred on a lower abstraction level.
184	Startup_Error	Error occurring during application startup **(DBS, DIA, MAC, EVP, TIM).**
185	Initial_Check_Error	Error occurring during initial application check.
186	Application_Not_Licensed	No licence found for the application.
187	Transition_Error	Error because forbidden state transition attempted **(OBJ and thus all subsystems).**
189	Other_Appl_Fail	Another application has failed to provide the required data.
190	Other_Appl_Inconsistent	Another application has provided inconsistent/unexpected data.
191	Own_Appl_Inconsistent	The application itself has inconsistent or missing data.
192	Num_Restarts_Exceeded	The number of restarts following an error has been exceeded.

Error No.	**Error name**	**Significance** (subsystems)
193	Load_New_Error	An error has occurred during system Load_New.
194	Default_Values_Loaded	An application loaded its default values from the database.
195	Attributes_Not_Valid	The attributes for an application on Load_New are not valid, consistent **(EVP)**
196	Signal_Not_Connectable	A signal could not be connected using *Signals*.
197	Unknown_Error	An unknown internal error was detected and no appropriate error number found **(MDP).**
198	Own_Exception	A defined internal exception occurred.
199	Own_Unexplained_Except	An unexplained exception (exception/when others) occurred.
200	Own_Constraint_Except	An exception due to a constraint error occurred.

Table 9.2 Error messages on the local HMI

NOTICE: The bold error numbers can be used as diagnose signals in CAP581.

9.2.2.3. Redundancy Minor error table

Error No.	**Designation**	**Significance**
41	First IEC101 line failed	First IEC101 line was active, backup or idle and failed
43	Second IEC101 line failed	Second IEC101 line was active, backup or idle and failed
81	First IEC101 line failed	First IEC101 line was active and failed
83	Second IEC101 line failed	Second IEC101 line was active and failed
91	First IEC101 line failed	First IEC101 line was backup and failed
93	Second IEC101 line failed	Second IEC101 line was backup and failed
101	First IEC101 line failed	First IEC101 line was idle and failed
103	Second IEC101 line failed	Second IEC101 line was idle and failed

9.3. *Typical configuration errors of the CAP581 tool*

9.3.1. *Protocol-related error messages*

IEC101 Link_Layer: Transmit operation returned an error

This message appears on the EVL when a connection to PP870 cannot be established:
Reason: “Unbalanced” has to be set for Interchange_Mode. Only in the case of RWE (at 64 kbps) is there an application that sets “Balanced” (a special version of PP870 (plug-in card) is necessary).

The LON “Invalid” stamp does not function

Data points can only be stamped IV (invalid), if the unit address has been assigned to a physical device which has failed (Tab. LON_Logical_Device).

IEC101: Switching of cycling times for measured variables does not function

This error is observed when a bay address has not been or incorrectly marked for masking.

IEC103 messages are not transmitted via LON

The messages are rejected by LAC (wrong PI data type), if Double_ Point_Indication was not set as LON_Data_Type for IEC103 indication.

RP571error 199 from Standard_Services (during start-up)

Check whether block numbers higher than 254 were used for RP571 data points. This is only permissible for commands (Block_Number = Object_Number).

9.3.2. *COM581-related error messages*

A database cannot be loaded in the Limited ready mode

LMI display: Error code 003
Cause: The number of CPUs according to SiMon is lower than the number effectively inserted in the rack.

COM581 does not change to System ready state

LMI display: Error code 003
Cause: The number of CPUs according to SiMon is lower than the number effectively inserted in the rack.

Serial line slot (Port) No.

Only **slots (ports) Nos. 3 and 4** may be configured when using the frontplate interfaces.
Typical error and its effects:
The RAM version does not start when using slot 1 because the application occupies the communication interface instead of Alsymon, which stops both the application and Alsymon.

Wrong COM581 CPU time

The COM581 time can only be set on the IMP (Master) using DIS581.

Time stamped IV (invalid)

The radio clock has to be correctly set (CAP581 settings have not effect).
Remedy: Set the radio clock.
The following parameters have to be set for the radio clock on the MACM IMP Master: 9600,8,n,1.

SIG/MAC error 6

Major error 6 is generated when the SIG queue is blocked. This happens every time a remote control line is out of operation and a queue is configured for MDP channels.
Remedy: Unplug the optical fiber cable when the remote control link has failed.

SIG error 183

Minor error 183 is generated when the bus send queue for channel 2 (indications) is too small to transmit a GA.

SIG error 97

A minor error is generated occasionally when *Signals* attempts to scan data sets for which a SON_Dataset (node status) has not been configured.
Care must therefore be taken during configuration that a SON signal is configured in a SON data set (Valid_Check to True) for every device connected to the bus, which will receive data.
During start-up, there is an additional EVL output that displays the device HW_Component_ID of the device for which a SON has not been configured.

SIG SIG-H.: DRAM_Access_Error Error_No.9

This error message occurs, for example, when *Indications* was configured as a **sink** for the bus. The correct situation is when the bus application is the source for indications and a sink for commands.

No time synchronization via the remote control line with LON

LON-IP only functions as a time slave on the Interbay bus. The substation cannot therefore be synchronized via the remote control line when using LON.

9.3.3. Typical configuration errors:

Error	Cause	Test	Solution
No indications are being transferred (not even for a GA)	Indication was defined as Sequence_of_Events.	Signal list in the CAP581 property window	Change settings
IEC101 indications are sometimes shown with the wrong value and correct status	Indication type does not agree with the type sent by the bay unit.	IEC101	Correct single ↔ double
Only IDMs are transferred.	ERMIs are suppressed in RP57x.	Check properties	Change in the form
	ERMIs are not being transferred by the bay unit.	Bus monitor	
The databases cannot be opened.	Wrong base line Wrong directory structure		Reinstall tool. Correct directory structure
CAP581 crashes	Wrong base line Wrong directory structure		Reinstall tool. Correct directory structure
Builder causes CAP581 to crash and the Windows error message “Memory read fail” appears	The DLL files are incorrect		Replace files or install Visual Dev. Studio 5.0 and copy DLL files to the directory BIN
Indications **no longer** being transferred (bay unit invalid in the GA).	Optical fiber cable disconnected from the bay unit or COM581.		
A RESET occurs while starting (Start applications) the IEC101 protocol	The Slot/Port_No. for the serial interface was incorrectly configured.	Event-Logger-Info: Configuration error	Slot/Port_No.=3 or 4 Exception for IEC103 protocol
No indications are generated by IEC101 when protection devices are connected (just events)	The data points were configured as Sequence_of_Events.	Signal list CAP581 IEC101	Correct Differential import
RESET occurs while starting TIM: Synchronization point 8 (in the case of a COM581 without radio clock)	COM581 is a slave on the Bus and uses the radio clock.	Time_management	Correct accordingly in the DB: - Delete Master, Serial, Slave - Master, VME, Master - (CIM), VME, Slave
	A binary file was down loaded using PC terminal		Send test file without LF

Error	Cause	Test	Solution
Metering query not functioning (also type detection via 101)	FCOM3 has to be de fined in COM581.	RP57x_Datapoint. FCOM	Configure accordingly
	Data sets 4081..4084 must be configured in BA.	In the BA	128 bit, 512 ms
Protection events are not transferred as indications.	This has to be defined in an AEG protection device as data type 17.	Protocol analyzer	
Signals are not imported correctly.	Wrong value for DataType_NCC.	Signal list	Signal list
Reset at “synchro-point 8”	Wrong node ID on the two COM581 boards.	Check the parameter block using SiMon	Simon>pb
Reset at ”Start Applications”	The star-coupler is in the wrong slot		Put star-coupler in the right slot
COM581 stops at ”synchro-point 8”.	The database that has been downloaded must include at least one COM581 data point.		Create a COM581 data point.
COM581 does not start.	Wrong database loaded.	DIS581: • Database comparison Section 4.4.6 • Upload Section 4.4.2	Load correct database into COM581.
Signal not functioning.	Some signals incorrectly configured.	DIS581: • Signal Forcing Section 4.4.10 • Protocol Monitoring Section 4.4.9	Correct in CAP581.

Table 9.3 Typical configuration errors

9.4. Local software error messages

NOTICE: No errors should occur during normal operation of the gateway. Should nevertheless one occur, note the precise error message and contact us or our local representative. Please also fill in the notification form in the appendices for software errors and problems and forward it to the address given.

9.5. Replacing units and assemblies

DANGER: Units and modules may only be replaced while the supply is switched off and only by appropriately trained and qualified personnel. Strictly observe the basic precautions to guard against electrostatic discharge.

The basic precautions to guard against electrostatic discharge are as follows:

Before touching any of the units or modules, discharge yourself by touching station ground (the cubicle).
Only hold electronic boards at the edges, taking care not to touch the components.

Only insert or withdraw the power supply unit while the supply is switched off. To this end, place the switch on the power supply unit in the off position and withdraw the green plug on the supply cable. It is not sufficient simply to turn the supply off at the switch.
Only insert or withdraw the other units while the power supply unit 500PSM03 is switched off.

Check the hardware configuration of the replacement unit and adjust as necessary (switches on module 500SCM02, see Chapter 6). Be sure to insert the replacement unit in precisely the same slot as the defective one was removed from.
Download the basic software to the replacement unit (see Chapter 8).

10. DECOMMISSIONING, STORAGE AND DISPOSAL

10.1. Shipping and storing the device

The device and the individual processor units may only be shipped or stored in the boxes and packing specified for the purpose.

Refer to Section 6.3, or the Data Sheet of the gateway COM581 (1MRB520206-Ben) for the permissible ambient conditions for storage.

10.2. Shipping and storing optical fiber cables

Both single and multi-core optical fiber cables must be adequately protected from mechanical damage and damp during shipment and storage. Especially the cable ends must be protected to prevent the ingress of moisture. Rolls of cables may only be turned in the direction of the arrow on the side and may only be transported on horizontal spindles. Avoid submitting the cables to vibration.

10.3. Decommissioning

DANGER: When designing the Station , it must be taken into account that the **COM581 system can be switched off,** while other equipment is still in service

10.3.1. Switching off

To switch off the COM581, place the switches on the power supply units in the off position and withdraw the green power supply connectors.

10.3.2. Disconnecting optical fiber cables

Disconnect the optical fiber cables in accordance with recommendations made under Section 10.2.

10.3.3. Dismantling

The COM581 rack may now be removed from the system cubicle, after which the cubicles may also be removed.

DANGER: When the station is in operation, make sure that there is an **adequate safety distance to live parts**, especially as dismantling is often performed by unskilled personnel.

10.4. Disposal

NOTICE: Strictly observe all local and national regulations when disposing of the device.

In every country there are companies specialized in the proper disposal of electronic waste.

11. INTERFACE CABLES

11.1. Serial interfaces

- Optical interface for service PC on the frontplate
- Interfaces on the back of the device as required (e.g. IEC 1375, RS 232, IEC60870-5-103 (formerly VDEW6), IEC60870-5-101)

11.1.1. Connecting cable between PC and LMI

The connecting cable between the optical interface on the front-plate of the gateway and the corresponding interface on the PC (9 or 25 pin SUB-D connector) is illustrated in Figure 11.1. A 9 pin/25 pin adapter is required where the 9 pin interface on the PC has to be used.

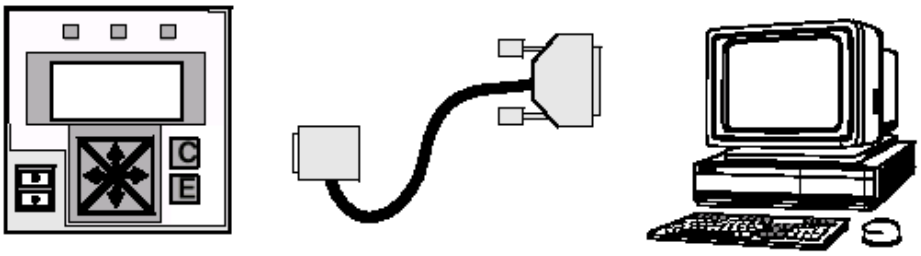

Figure 11.1 Connecting cable between the optical interface on local HMI and the PC

For the Part Number of the connecting cable between the optical interface on the COM581 and an RS232 interface on the PC see Section 3.1.6.3. It is needed for downloading the configuration data (project database) using the DIS581 tool on the PC.

11.1.2. Connecting cable between COM581 (CPU boards) and a PC

A screened cable with at least three cores and an RJ45 at one end and a Sub-D9 socket connector at the other is needed to connect the COM581 units to a PC. The screen is connected to the connector casings at both ends.
It is used for downloading the basic software (firmware), transferring the event logger output, protocol emulation, or for the ccf-files (pertinent for IEC61850 protocol only)

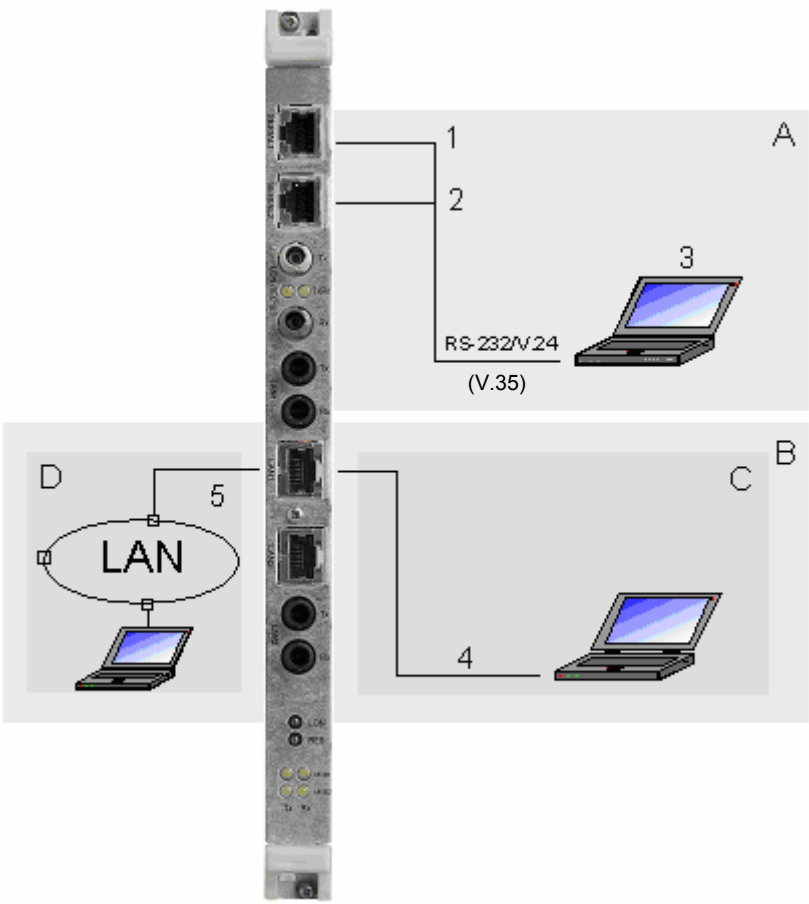

A	Connection for loading basic software or protocol emulation
B	Connection event logger
C	Basic network 1:1 connection (Laptop → CIM06-board)
D	Network 1:n connection
1	Protocol emulation
2	Protocol emulation, basic software
3	Terminal emulation (e.g. SWT)
4	Crossed Ethernet cable
5	Standard Ethernet cable

Figure 11.2 500CIM06 board for connection to a PC

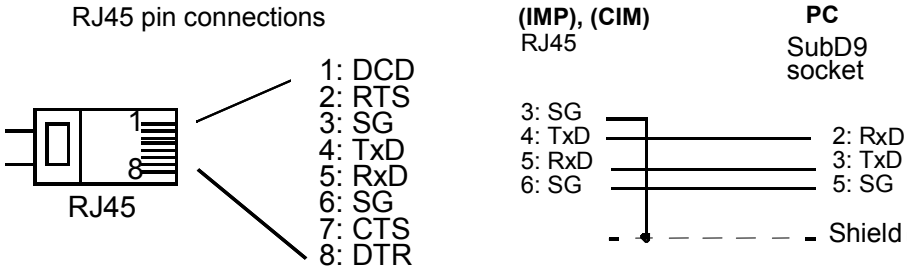

Figure 11.3 Wiring of the connector cable between COM581 (500CIM06) and RS232 interface (PC)

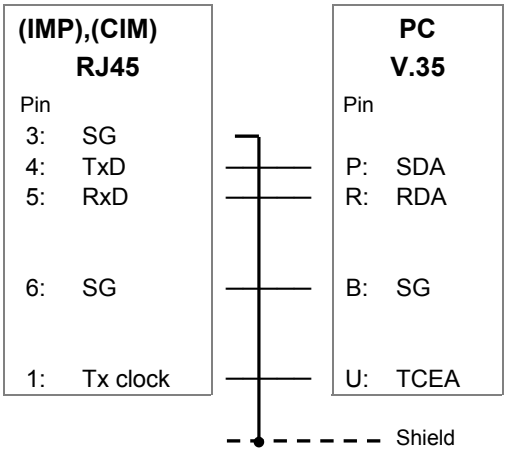

Figure 11.4 Wiring of the connector cable between COM581 (500CIM06) and V.35 interface (PC)

NOTICE: A screened and earthed cable must be used.

11.1.3. Master station monitoring cable

A screened cable with at least eight cores and connectors wired as shown in the following diagram is needed as monitoring cable when using an RP57X protocol emulation tool in conjunction with COM581 and the master station.
The screen is connected to the connector casings at both ends.

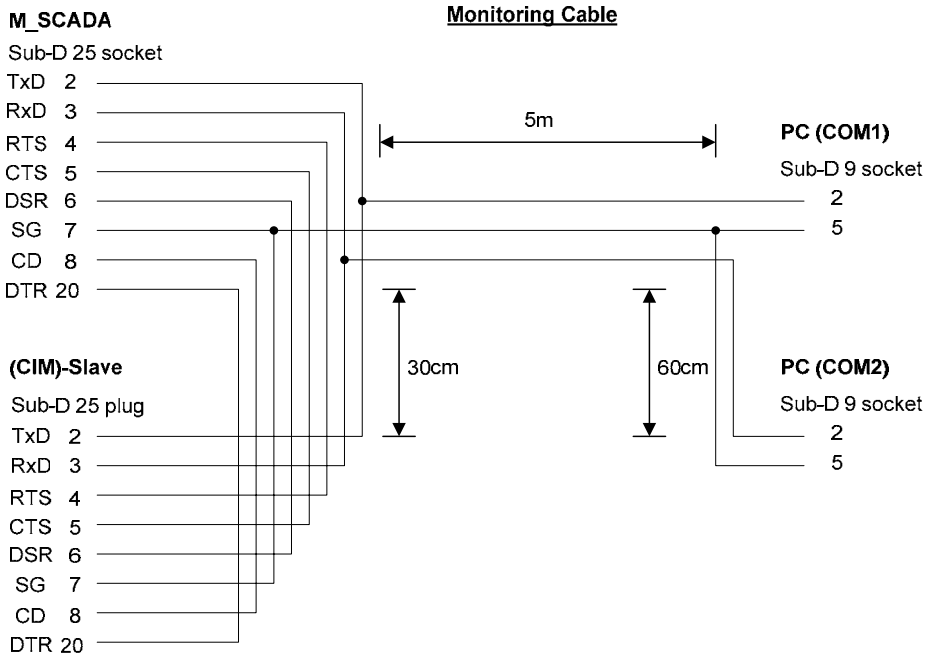

Figure 11.5 Protocol monitoring cable for PC

11.1.4. Gateway redundancy cable

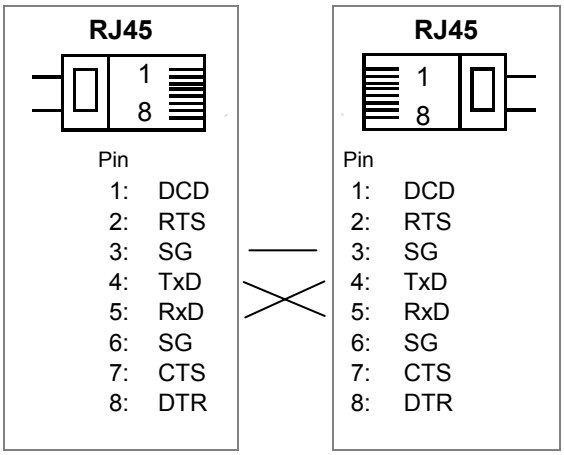

Figure 11.6 Wiring of the gateway redundancy cable

12. PROTOCOLS

The scope of all the protocols is described in detail in the respective compatibility lists (these lists can be received via the SA - Support Line, e-mail address: sa-t.supportline@se.abb.com).

13. APPENDICES

13.1. Glossary (Terms and Abbreviations)

Since the meanings of many of the abbreviations in this document differ depending on the context in which they are used, they are grouped below.

13.1.1. Glossary: General

ANSI	American National Standard Institute
BA	Bus administrator
ESD	Electrostatic discharge
GA	General polling
ID	Identification
IEC	International Electrotechnical Commission
I/O	Input/output
LSB	Least significant bit
LON bus	Local operating network bus
MSB	Most significant bit
SA	Substation automation
TS	Time synchronization
TIM	Time management
VATS	Very accurate time synchronization

13.1.2. Glossary: Hardware

500CIM06	Processing unit
500CUB03	Unit back plane bus
500PSM03	Power supply unit (100 W)
500SCM02	Star-coupler
(CIM)	Slave Board(s) of a COM581 System
COM581	Gateway (intelligent communication controller)
DTE	Data terminal
EEPROM	Electronic erasable/programmable read only memory
EMI	Electrical machine interface (optical interface on the LMI)
EPROM	Erasable/programmable read only memory
FG	Bay unit
HMI	Human machine interface
HW	Hardware
IBB	Station bus
ICC	Intelligent communication controller, see COM581
IMP	Master Board of a COM581 System
IP	Industry pack
500LBIO02	Process bus interface (LON interface)

LCD	Liquid crystal display
LED	Light emitting diode
LMI	Local operator interface, small LCD
LNT	LON network tool
LPA	LON protocol analyzer
MVBC	Multi-vehicle bus controller (ASIC)
PB	Process bus
PBI	Process bus interface
PSM	Power supply unit
RAM	Random access memory
RTU	Remote terminal unit
SCI	Serial communication interface
SCLM	Clock master board
SCM	Star-coupler module
SCS	Substation control system
SRAM	Solid-state RAM
VME	Versatile Module Euroboard: back plane bus

13.1.3. Glossary: Software

ASDU	Application service data unit
Basic period	Shortest cycling time
BBRAM	Battery backed random access memory
COT	Cause of transmission
CCF	Configuration file for IEC 61850 card (SCL format)
DAC	Data Accessor
DBS	(Configuration) database system
DCO	Double command
DIA	Subsystem diagnostics
DIS581	Diagnostic and information system
DPI	Double point indication
EQL	Error qualifier level
ERMA	Real time analogue measure variable telegram
ERMI	Event recorder message indication
EVL	Event logger
FSE	Bay control unit
FUP	Function plan
HW	Hardware
IAL	Internal application layer
IBB	Interbay bus
ICC	Intelligent communication controller COM581
IEC101	IEC60870-5-101 remote control protocol
IEC104	IEC60870-5-104 remote control protocol
IEC103	IEC60870-5-103 protection protocol
IND	Indication

LSK	Control unit coupler
MAC	MVB application converter
MAL	MVB application layer
MAL address	Five-part MVB address
MDP	Software subsystem: message dispatcher
MMI	Man machine interface
MMC	Man machine communication
NCC	Power system control centre
NV	Network variable
OVRD	Override/bypass
POS	Position
PSF	Project Specific Functions (e.g. AND or OR or further logic functions)
Qx	Switchgear designation
RP571	ABB protocol for communication between COM581 and MicroSCADA
SF6	Sulphur hexafluoride gas insulation
SiMon	Simple monitor
SMS	Substation monitoring system
SOE	Sequence of events
SON	Node status
STA	Station
STS	Status
SW	Software
SWT	Software download tool
TIM	Time management
VME bus	Versa module Euroboard back plane bus
VSQ	Variable structure qualifier, application layer data service unit IEC60870-5-101 for transferring process and message data

13.2. External COM581 connections (example)

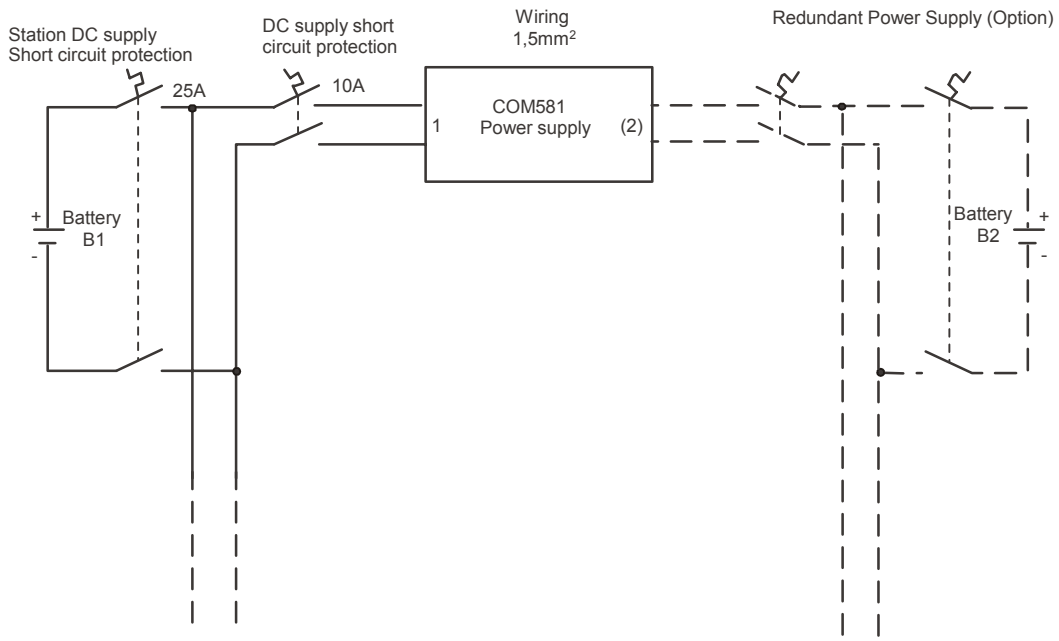

Figure 13.1 Typical DC distribution diagram (station battery)

13.3. Typical values for electronic equipment workbenches

Leakage resistances for workbenches that are safe for electronic equipment:

Floor covering	>1 MOhm
Workbench surface	>1 MOhm
Ground wristband	>1 MOhm

Recommended suppliers:

RS Components GmbH

64546 Mörfelden-Walldorf
Germany
www.rs-components.de

CANESPA

30851 Langenhagen
Germany
www.kvt-canespa.de

13.4. Literature

Protocols

[IEC61850]

International Electrotechnical Commission, Telecontrol Equipment and Systems, IEC61850.

[IEC60870-5-103]

International Electrotechnical Commission, Telecontrol Equipment and Systems, IEC60870-5-103.

Software

[CAP581] Operating Instructions CAP581, Version 6.0, July 2005, 1MRB520184-Uen.

Notification Form for Errors in this Document

Dear User,

We constantly endeavour to improve the quality of our **technical publications** and would like to hear your suggestions and comments. Would you therefore please fill in this questionnaire and return it to the address given below.

ABB Switzerland Ltd
Power Systems
Betreuung Dokumentation, PS-BD
Bruggerstrasse 72
CH-5401 Baden
Fax +41 58 585 51 12

Concerns publication: 1MRB520267-Uen (COM581 V6.2)

Have you discovered any mistakes in this publication? If so, please note here the pages, sections etc.

Do you find the publication readily understandable and logically structured? Can you make any suggestions to improve it?

Is the information sufficient for the purpose of the publication? If not, what is missing and where should it be included?

Name: Date:

Company:

Postal code: Town: Country:

Notification Form for Equipment Faults and Problems

Dear User,

Should you be obliged to call on our repair service, please attach a note to the **unit** describing the fault as precisely as possible. This will help us to carry out the repair swiftly and reliably, which after all is to your own advantage.
Please attach a completed form to every unit and forward them to the address below.

Place of delivery Baden/Switzerland:

ABB Switzerland Ltd
Power Systems
Repair Center
Warenannahme PT-EG
Bruggerstrasse 72
CH-5401 Baden

Equipment data:

Unit type:

Serial No.: …….....

In operation since:

Reason for return: (tick where applicable)

❑ Overfunction

❑ No function

❑ Outside tolerance

❑ Abnormal operating temperature

❑ Sporadic error

❑ Unit for checking

Remarks/Description of fault:

Customer: Date:

Address:

Please contact: Phone: Fax:

Notification Form for Software Errors and Problems

Dear User,

As we all know from practice, software does not always function as expected for all applications. A precise description of the problem and your observations will help us to improve and maintain the software. Please complete this form and send it together with any supporting information or documents to the address below.

ABB Power Technologies AB
Substation Automation
Product Support, Supportline
SE-721 59 Västerås
Sweden
Telefax +46 21 14 69 18
E-mail: sa-t.supportline@se.abb.com

Unit/ System: ❑ COM581 SW Version:
❑ HMI SW Version:
❑ other: SW Version:

Problem: ❑ Program error (unit/system) ❑ Program error (HMI /PC)
❑ Error in manual ❑ Suggestion for improvement
❑ other:

Can the error be reproduced at will? ❑ yes ❑ no

Particulars of hardware and software (unit/system configuration including jumper positions, type of PC etc.):

Problem located? ❑ yes ❑ no
Suggested changes enclosed? ❑ yes ❑ no

The following are enclosed (floppy/CD with settings etc.):

❑ Floppy/CD ❑ Unit/system settings, file name:
❑ other:

Description of problem:

Customer: Date:

Address:

Please contact: Phone: Fax:

DESCRIPTION OF PROBLEM: (continuation)

ACTION (internal use of ABB Sweden only)

Received by: Date:
Answered by: Date:

Problem solved? ❑ yes ❑ no

Week: Name: Position: Consequence:

IMPORTANT NOTICE!

Experience has shown that reliable operation of our products is assured, providing the information and recommendations contained in these Operating Instructions are adhered to.

It is scarcely possible for the instructions to cover every eventuality that can occur when using technical devices and systems. We would therefore request the user to notify us directly or our agent of any unusual observations or instances, in which these instructions provide no or insufficient information.

In addition to these instructions, any applicable local regulations and safety procedures must always be strictly observed both when connecting up and commissioning this equipment.

Any work such as insertion or removal of soldered jumpers or setting resistors, which may be necessary, may only be performed by appropriately qualified personnel.

We expressly accept no responsibility for any direct damage, which may result from incorrect operation of this equipment, even if no reference is made to the particular situation in the Operating Instructions.

ABB Switzerland Ltd
Power Systems
Bruggerstrasse 72
CH-5400 Baden / Switzerland
Phone +41 58 585 77 44
Fax +41 58 585 55 77
E-mail substation.automation@ch.abb.com

www.abb.com/substationautomation

Printed in Switzerland (0607-0000-0)