ABB INDUSTRIAL DRIVES

ACS880-04F drive modules

Hardware manual

ACS880-04F drive modules

Hardware manual

Table of contents

1. Safety instructions

5. Mechanical installation

7. Electrical installation

10. Start-up

3AXD50000034664 Rev E
EN
Original instructions
EFFECTIVE: 2025-06-26

Table of contents

1 Safety instructions

Contents of this chapter.... 13
Safety messages.... 13
General safety in installation, start-up and maintenance.... 14
Electrical safety in installation, start-up and maintenance.... 16
Electrical safety precautions.... 16
Additional instructions and notes.... 17
Printed circuit boards.... 17
Grounding.... 18
General safety in operation.... 19
Additional instructions for permanent magnet motor drives.... 19
Safety in installation, start-up, maintenance.... 19
Safety in operation.... 20

2 Introduction to the manual

Contents of this chapter.... 21
Target audience.... 21
Categorization by frame size and option code.... 21
Quick installation, commissioning and operating flowchart.... 22
Terms and abbreviations.... 23
Related documents.... 24

3 Operation principle and hardware description

Contents of this chapter.... 25
Product overview.... 26
Layout.... 27
Standard drive module configuration.... 27
Drive module without full-size output cable connection terminals (option +0H371) and IP20 shrouds (option +0B051), with common mode filter (+E208).... 29
Control unit.... 29
Overview of power and control connections.... 30
Type designation label.... 30
Type designation key.... 31
Basic code.... 31
Option codes.... 32

4 Guidelines for planning the mechanical installation

Contents of this chapter.... 35
Installation alternatives.... 35
Channel installation.... 35
Basic requirements for the channel wall.... 35
Installation principle.... 36
Cabinet installation.... 37
Layout example, outside view.... 37
Layout example, inside view.... 38

Mounting the control panel on the cabinet door.... 39
Installation positions other than vertical.... 40
Required free space.... 41

5 Mechanical installation

Contents of this chapter.... 43
Examining the installation site.... 43
Moving and unpacking the unit.... 43
Unpacking.... 44
Package drawings.... 45
Examining the delivery.... 47
Lifting.... 47
Attaching alternatives.... 48
Attaching the drive module by the flange.... 48
Attaching the drive module by the heatsink.... 49
Attaching the metallic shroud (standard).... 50
Attaching the external control unit.... 50
Attaching the external control unit to a mounting plate or wall.... 51
Attaching the external control unit vertically on a DIN rail.... 51
Attaching the external control unit horizontally on a DIN rail.... 52

6 Guidelines for planning the electrical installation

Contents of this chapter.... 53
Limitation of liability.... 53
North America.... 53
Selecting the main supply disconnecting device.... 53
Selecting the main contactor.... 54
Examining the compatibility of the motor and drive.... 54
Protecting the motor insulation and bearings.... 54
Requirements tables.... 55
Requirements for ABB motors, P_n < 100 kW (134 hp).... 55
Requirements for ABB motors, $P_n \geq$ 100 kW (134 hp).... 56
Requirements for non-ABB motors, P_n < 100 kW (134 hp).... 57
Requirements for non-ABB motors, $P_n \geq$ 100 kW (134 hp).... 58
Abbreviations.... 58
Availability of d*u*/d*t* filter and common mode filter by drive type.... 59
Additional requirements for explosion-safe (EX) motors.... 59
Additional requirements for ABB motors of types other than M2_, M3_, M4_, HX_ and AM_.... 59
Additional requirements for braking applications.... 59
Additional requirements for ABB high-output and IP23 motors.... 59
Additional requirements for non-ABB high-output and IP23 motors.... 59
Additional data for calculating the rise time and the peak line-to-line voltage. 60
Additional note for sine filters.... 61
Selecting the power cables.... 61
General guidelines.... 61
Typical power cable sizes.... 62
Power cable types.... 62
Preferred power cable types.... 62
Alternate power cable types.... 63
Not allowed power cable types.... 64

Additional guidelines – North America.... 64
Metal conduit.... 64
Power cable shield.... 65
Grounding requirements.... 65
Additional grounding requirements – IEC.... 66
Additional grounding requirements – UL (NEC).... 66
Selecting the control cables.... 67
Shielding.... 67
Signals in separate cables.... 67
Signals that can be run in the same cable.... 67
Relay cable.... 67
Control panel to drive cable.... 67
PC tool cable.... 67
Routing the cables.... 68
General guidelines – IEC.... 68
General guidelines – North America.... 68
Continuous motor cable shield/conduit and metal enclosure for equipment on the motor cable.... 69
Separate control cable ducts.... 69
Protecting the drive, input power cable, motor and motor cable in short circuit situations and against thermal overload.... 70
Protecting the drive and the input power cable in short-circuits.... 70
Protecting the motor and motor cable in short-circuits.... 70
Protecting the motor cables against thermal overload.... 70
Protecting the motor against thermal overload.... 71
Protecting the motor against overload without thermal model or temperature sensors.... 71
Protecting the drive against ground faults.... 71
Residual current device compatibility.... 72
Implementing a motor temperature sensor connection.... 72
Connecting a motor temperature sensor to the drive through an option module. 72
Implementing the emergency stop function.... 73
Implementing the Safe torque off function.... 73
Implementing the functions provided by the FSO safety functions module.... 74
Implementing the functions provided by the FSPS-21 PROFIsafe safety functions module.... 74
Implementing the functions provided by the FSCS-21 CIP Safety™ functions module.... 74
Using power factor compensation capacitors with the drive.... 75
Using a safety switch between the drive and the motor.... 75
Implementing an ATEX-certified motor thermal protection.... 75
Implementing the power loss ride-through function.... 76
Controlling a contactor between drive and motor.... 76
Implementing a bypass connection.... 77
Example bypass connection.... 77
Switching the motor power supply from drive to direct-on-line.... 78
Switching the motor power supply from direct-on-line to drive.... 78
Protecting the contacts of relay outputs.... 78

7 Electrical installation

Contents of this chapter.... 81
Safety.... 81

Grounding the motor cable shield at the motor end.... 81
Measuring the insulation.... 82
Measuring the insulation resistance of the drive.... 82
Measuring the insulation resistance of the input power cable.... 82
Measuring the insulation resistance of the motor and motor cable.... 82
Measuring the insulation resistance of the brake resistor circuit.... 82
Grounding system compatibility check.... 83
Corner-grounded and midpoint-grounded 525...690 V delta systems.... 83
Grounding the drive module.... 83
Connecting the power cables.... 84
Power cable connection diagram.... 85
Preparing the cable ends and making 360° grounding at the cable entry.... 86
Power cable connection procedure.... 87
.... 87
DC connection.... 88
Removing the control panel holder from the external control unit.... 88
Attaching the control cable clamp plate.... 89
Connecting the external control unit to the drive module.... 89
Control unit connection cables.... 89
Routing the control unit cables into the drive module.... 90
Connections to the drive module.... 90
Connections to the control unit.... 91
Connecting the control cables to the terminals of the external control unit.... 92
Installing the control panel holder back onto the external control unit.... 93
Connecting a control panel.... 94
Panel bus (control of several units from one control panel).... 94
Connecting a PC.... 96
Installing option modules.... 97

8 Control unit

Contents of this chapter.... 99
General.... 99
ZCU-14 layout....100
Default control connection diagram of the drive control unit (ZCU)....101
Additional information on the connections....103
Connecting motor temperature sensors to the drive....103
Power supply for the control unit (XPOW)....103
Digital interlock (DIIL)....103
The XD2D connector....103
Safe torque off (XSTO)....104
Safety functions module connection (X12)....104
Connector data....105
ZCU ground isolation diagram....107

9 Installation checklist

Contents of this chapter....109
Checklist....109

10 Start-up

Contents of this chapter.... 111
Reforming the capacitors.... 111

Start-up procedure.... 111

11 Fault tracing

Contents of this chapter.... 113
LEDs.... 113
Warning and fault messages.... 113

12 Maintenance

Contents of this chapter.... 115
Maintenance intervals.... 115
Description of symbols.... 115
Recommended maintenance intervals after start-up.... 116
Cabinet.... 117
Cleaning the interior of the cabinet.... 117
Heatsink.... 117
Cleaning the interior of the heatsink.... 118
Fans.... 119
Replacing the circuit board compartment cooling fans.... 119
Replacing the main cooling fans.... 121
Replacing the standard drive module.... 123
Capacitors.... 123
Reforming the capacitors.... 123
Control panel.... 123
Control unit.... 123
Replacing the ZCU-14 control unit battery.... 124
Replacing the memory unit of ZCU-14.... 124
Functional safety components.... 125

13 Ordering information

Contents of this chapter.... 127
Output (d*u*/d*t*) filters.... 127
Sine filters.... 127
FSO accessories kit.... 128
Retrofit accessory kits.... 128

14 Technical data

Contents of this chapter.... 129
Electrical ratings.... 129
Output derating.... 131
When is derating necessary.... 131
Ambient temperature derating.... 131
Altitude derating.... 132
Deratings for special settings in the drive control program.... 133
High speed mode.... 135
Fuses (IEC).... 137
Calculating the short-circuit current of the installation.... 137
Calculation example.... 138
Fuses (UL).... 139
Circuit breakers.... 140
Dimensions, weights and free space requirements.... 140
Package dimensions.... 141

Losses, cooling data and noise....142
Typical power cables....143
Terminal and entry data for the power cables....144
Units without full-size output cable connection terminals and with a common mode filter (+E208)....144
Terminal data for the control cables....144
Electrical power network specification....144
Motor connection data....144
Brake resistor data....145
d*u*/d*t* and sine filters....145
DC connection data....146
Control panel type....146
Efficiency....146
Energy efficiency data (ecodesign)....147
Protection classes....147
Ambient conditions....148
Storage conditions....149
Colors....149
Materials....149
Drive....149
Package materials for module products....149
Package materials for options, accessories and spare parts....150
Materials of manuals....150
Disposal....150
Applicable standards....150
Markings....151
EMC compliance (IEC/EN 61800-3)....152
Definitions....152
Category C3....152
Category C4....153
UL checklist....154
Disclaimers....154
Generic disclaimer....154
Cyber security disclaimer....155
Declarations of conformity....155

15 Dimension drawings

Contents of this chapter....157
Standard configuration – IP20 (UL Type Open)....158
Drive module with options +E208 and +H370 – IP20 (UL Type Open)....159
Drive module with options +0B051+E208+0H371 – IP00 (UL Type Open)....160
Drive module with options +0B051+E208+0H371+C217 – IP00 (UL Type Open)....161
Drive module with options +0B051+0H371 – IP00 (UL Type Open)....162
Terminal busbars....163
Mounting plate opening....164
External control unit....166

16 Example circuit diagram

Contents of this chapter....167
Example circuit diagram....167

17 The Safe torque off function

Contents of this chapter....169
Description....169
Compliance with the European Machinery Directive and the UK Supply of Machinery (Safety) Regulations....170
Wiring....171
Activation switch....171
Cable types and lengths....171
Grounding of protective shields....171
Single drive (internal power supply)....172
Dual-channel connection....172
Single-channel connection....173
Multiple drives....174
Internal power supply....174
External power supply....175
Operation principle....176
Start-up including validation test....177
Competence....177
Validation test reports....177
Validation test procedure....177
Use....179
Maintenance....180
Competence....180
Perfect proof test procedure....181
Simplified proof test procedure....181
Fault tracing....182
Safety data....183
Terms and abbreviations....185
TÜV certificate....186

18 Resistor braking

Contents of this chapter....187
When to use resistor braking....187
Operation principle and hardware description....187
Planning the braking system....187
Generic guidelines....187
Resistor cables....188
Resistor thermal switch....188
Protecting the system against thermal overload....188
EMC compliance of the complete installation....189
Selecting the installation location for the brake resistors....189
Protecting the system in fault situations....189
Selecting the drive, brake chopper and brake resistor....189
Calculation example....190
Selecting a custom brake resistor....190
Mechanical installation of resistors....191
Electrical installation....191
Measuring the insulation of the assembly....191
Connection diagram....191
Connection procedure....191

Start-up....191
Parameter settings....191
Technical data....193
Ratings....193
SAFUR resistor data....194
Terminals and cable entry data....194

19 Filters

Contents of this chapter....195
d*u*/d*t* filters....195
When is a d*u*/d*t* filter necessary?....195
Selection table....195
Ordering codes....196
Description, installation and technical data of the FOCH filters....196
Sine filters....196
When is a sine filter necessary?....196
Selection table....196
Ordering codes....196
Derating....196
Description, installation and technical data of the sine filters....196

Further information

1

Safety instructions

Contents of this chapter

This chapter contains the safety instructions which you must obey when you install, start-up, operate and do maintenance work on the drive. If you ignore the safety instructions, injury, death or damage can occur.

Safety messages

These safety messages help to prevent personal injury and damage to the equipment. The hazard levels comply with standard ANSI Z535.6.

The manual uses these warning symbols:

DANGER Indicates a hazardous situation which, if not avoided, will result in death or serious injury.

WARNING Indicates a hazardous situation which, if not avoided, could result in death or serious injury.

CAUTION Indicates a hazardous situation which, if not avoided, could result in minor or moderate injury.

NOTICE Is used to address practices not related to physical injury, but which can result in equipment damage.

General safety in installation, start-up and maintenance

These instructions are for all persons who do work on the drive.

WARNING Obey these instructions. If you ignore them, injury or death, or damage to the equipment can occur.

- Keep the drive in its package until you install it. After unpacking, protect the drive from dust, debris and moisture.
- Use the required personal protective equipment: safety shoes with metal toe cap, safety glasses, protective gloves and long sleeves, etc. Some parts have sharp edges.
- Use a lifting device to lift a heavy drive. Use the designated lifting points. Refer to the dimension drawings.
- Obey the local laws and regulations that apply to lifts, such as the requirements to plan the lift, the capacity and condition of the lifting equipment, and personnel training.
- Attach the drive cabinet to the floor to prevent it from falling over. The cabinet has a high center of gravity. Attach the cabinet also to the wall when necessary.

- Beware of hot surfaces. Some parts, such as heatsinks of power semiconductors, and brake resistors, can be hot for a period after operation.
- Before the start-up, vacuum clean the area around the drive to prevent the drive cooling fan from drawing dust inside the drive.
- Make sure that debris from drilling, cutting and grinding does not go into the drive during installation. Electrically conductive debris inside the drive can cause damage or malfunction.
- Make sure that there is sufficient cooling. Refer to the technical data.
- Keep the drive cabinet doors closed when the drive has electrical power. If the doors of the drive cabinet are open, there is a risk of a potentially fatal electric shock, arc flash or high-energy arc blast exists.
- If you must do work on a drive that is connected to the power supply, obey the local laws and regulations on live electrical work. This includes, but is not limited to, electric shock and arc protection.
- Before you adjust the drive operation limits, make sure that the motor and all driven equipment can operate throughout the set operation limits.

- Before you activate the automatic fault reset or automatic restart functions of the drive control program, make sure that no dangerous situations can occur. These functions reset the drive automatically and continue operation after a fault or break in the power supply. If these functions are activated, the installation must be clearly marked as defined in IEC/EN/UL 61800-5-1, subclause 6.5.3, for example, "THIS MACHINE STARTS AUTOMATICALLY".
- The maximum number of drive power-ups is five in ten minutes. Too frequent power-ups can damage the charging circuit of the DC capacitors.
- If the drive has connected safety circuits (for example, Safe torque off or emergency stop), validate them at start-up. Refer to separate instructions for the safety circuits.
- Beware of hot air flow from the cooling outlets.
- Do not cover the air inlet or air outlet when the drive operates.

Note:

- If you select an external source for the start command and it is on, the drive starts immediately after a fault reset unless you configure the drive for pulse start. Refer to the firmware manual.
- If the drive is in remote control mode, you cannot stop or start the drive with the control panel.
- Only authorized persons are permitted to repair a faulty drive.

Electrical safety in installation, start-up and maintenance

Electrical safety precautions

These electrical safety precautions are for all persons who do work on the drive, motor cable or motor.

WARNING Obey these instructions. If you ignore them, injury or death, or damage to the equipment can occur. If you are not a qualified electrical professional, do not do electrical installation or maintenance work. Do these steps before you do installation or maintenance work.

1. Prepare for the work.
   - Make sure that you have a work order.
   - Do an on-site risk assessment or job hazard analysis.
   - Make sure that you have the correct tools available.
   - Make sure that the workers are qualified.
   - Select the correct personal protective equipment (PPE).
   - Stop the drive and motor(s).
2. Clearly identify the work location and equipment.
3. Disconnect all possible voltage sources. Make sure that connection is not possible. Lock out and tag out.
   - Open the main disconnecting device of the drive.
   - Open the charging switch if it is present.
   - Open the disconnector of the supply transformer. (The main disconnecting device in the drive cabinet does not disconnect the voltage from the AC input power busbars of the drive cabinet.)
   - Open the auxiliary voltage switch-disconnector (if it is present), and all other possible disconnecting devices that isolate the drive from dangerous voltage sources.
   - If there is a permanent magnet motor connected to the drive, disconnect the motor from the drive with a safety switch or by other means.
   - Open the main isolating device of the drive.
   - Disconnect all dangerous external voltages from the control circuits.
   - After you disconnect power from the drive, wait 5 minutes to let the intermediate circuit capacitors discharge before you continue.
4. Protect other energized parts in the work location against contact and take special precautions when close to bare conductors.
5. Measure that the installation is de-energized. Use a high-quality voltage tester. If the measurement requires that you remove shrouding or other cabinet structures, obey the local laws and regulations applicable to live electrical work. This includes, but is not limited to, electric shock and arc protection.
   - Before and after you measure the installation, verify the operation of the voltage tester on a known voltage source.
   - Make sure that the voltage between the input power terminals of the drive (L1, L2, L3) and the grounding (PE) busbar is zero.
   - Make sure that the voltage between the output power terminals of the drive (U, V, W) and the grounding (PE) busbar is zero.

     Important! Repeat the measurement with the DC voltage setting of the voltage tester. Measure between each phase and ground. There is a risk of dangerous DC voltage charging due to leakage capacitances of the motor circuit. This

voltage can remain charged for a long time after the drive power-off. The measurement discharges the voltage.
- Make sure that the voltage between the drive DC terminals (UDC+ and UDC-) and the grounding (PE) terminal is zero.

6. Install temporary grounding as required by the local regulations.
7. Ask for a permit to work from the person that is responsible for the electrical installation work.

Additional instructions and notes

WARNING Obey these instructions. If you ignore them, injury or death, or damage to the equipment can occur.

If you are not a qualified electrical professional, do not do installation or maintenance work.

- Keep the cabinet doors closed when the drive has electrical power. If the doors of the drive cabinet are open, there is a risk of a potentially fatal electric shock, arc flash or high-energy arc blast.
- Make sure that the electrical power network, motor/generator, and environmental conditions agree with the drive data.
- Do not do insulation or voltage withstand tests on the drive.
- If you have a cardiac pacemaker or other electronic medical device, do not go near the motor, drive, or the drive power cabling when the drive is in operation. The equipment produces electromagnetic fields that can cause interference in electronic medical devices. This can cause a health hazard.
- Remove the code labels that are attached to mechanical parts such as busbars, shrouds and sheet metal parts before installation. They can cause bad electrical connections, or, after peeling off and collecting dust, can cause arcing or block the cooling air flow.

Note:

- When the drive is connected to the input power, the motor cable terminals and the DC bus are at a dangerous voltage.
  The brake circuit, including the brake chopper (option +D150) and brake resistor (if it is installed) are also at a dangerous voltage.
  After you disconnect the drive from the input power, these remain at a dangerous voltage until the intermediate circuit capacitors discharge.
- External wiring can supply dangerous voltages to the relay outputs of the control units of the drive.
- The Safe torque off function does not remove the voltage from the main and auxiliary circuits. The function is not effective against deliberate sabotage or misuse.

Printed circuit boards

NOTICE Use an antistatic wrist strap when you handle printed circuit boards. Do not touch the boards unnecessarily. The boards are sensitive to electrostatic discharge.

Grounding

These instructions are for all persons who are responsible for the grounding of the drive.

WARNING Obey these instructions. If you ignore them, injury or death, or equipment malfunction can occur, and electromagnetic interference can increase.

If you are not a qualified electrical professional, do not do grounding work.

- Always ground the drive, the motor and adjoining equipment. This is necessary for personnel safety.
- Make sure that the conductivity of the protective earth (PE) conductors is sufficient and that other requirements are met. Refer to the electrical planning instructions of the drive. Obey the applicable national and local regulations.
- When you use shielded cables, make a 360° grounding of the cable shields at the cable entries to reduce electromagnetic emission and interference.
- In a multiple-drive installation, connect each drive separately to the protective earth (PE) busbar of the power supply.

General safety in operation

These instructions are for all persons that operate the drive.

⚠WARNING Obey these instructions. If you ignore them, injury or death, or damage to the equipment can occur.

- Keep the cabinet doors closed when the drive has electrical power. If the doors of the drive cabinet are open, there is a risk of a potentially fatal electric shock, arc flash or high-energy arc blast.
- If you have a cardiac pacemaker or other electronic medical device, do not go near the motor, drive, or the drive power cabling when the drive is in operation. The equipment produces electromagnetic fields that can cause interference in electronic medical devices. This can cause a health hazard.
- Give a stop command to the drive before you reset a fault. If you have an external source for the start command and the start is on, the drive starts immediately after the fault reset, unless you configure the drive for pulse start. Refer to the firmware manual.
- Before you activate the automatic fault reset or automatic restart functions of the drive control program, make sure that no dangerous situations can occur. These functions reset the drive automatically and continue operation after a fault or break in the power supply. If these functions are activated, the installation must be clearly marked as defined in IEC/EN/UL 61800-5-1, subclause 6.5.3, for example, "THIS MACHINE STARTS AUTOMATICALLY".

Note:

- The maximum number of drive power-ups is five in ten minutes. Too frequent power-ups can damage the charging circuit of the DC capacitors. If you need to start or stop the drive, use the control panel keys or commands through the I/O terminals of the drive or the fieldbus interface.
- If the drive is in remote control mode, you cannot stop or start the drive with the control panel.

Additional instructions for permanent magnet motor drives

Safety in installation, start-up, maintenance

These are additional warnings for permanent magnet motor drives. The other safety instructions in this chapter are also valid.

⚠WARNING Obey these instructions. If you ignore them, injury or death, or damage to the equipment can occur.

If you are not a qualified electrical professional, do not do installation or maintenance work.

- Do not do work on the drive when a rotating permanent magnet motor is connected to it. A rotating permanent magnet motor energizes the drive including its input and output power terminals.

Before installation, start-up and maintenance work on the drive:

- Stop the drive.
- Disconnect the motor from the drive with a safety switch or by other means.
- If you cannot disconnect the motor, make sure that the motor cannot rotate during work. Make sure that no other system, like hydraulic crawling drives, can rotate the motor directly or through any mechanical connection such as belt, nip, rope, etc.
- Do the steps in section Electrical safety precautions (page 16).
- Install temporary grounding to the drive output terminals (T1/U, T2/V, T3/W). Connect the output terminals together as well as to the PE.

During the start-up:

- Make sure that the motor cannot run at overspeed, for example, when it is driven by the load. Motor overspeed causes an overvoltage that can cause damage to the capacitors in the intermediate circuit of the drive.

Safety in operation

NOTICE Make sure that the motor cannot run at overspeed, for example, when it is driven by the load. Motor overspeed causes an overvoltage that can cause damage to the capacitors in the intermediate circuit of the drive.

2

Introduction to the manual

Contents of this chapter

This chapter describes the intended audience and contents of the manual. It contains a flowchart of steps in checking the delivery, installing and commissioning the drive. The flowchart refers to chapters/sections in this manual and other manuals.

Target audience

This manual is intended for people who plan the installation, install, commission, and do maintenance work on the drive, or create instructions for the end user of the drive concerning the installation and maintenance of the drive.

Read the manual before you do work on the drive. You are expected to know the fundamentals of electricity, wiring, electrical components, and electrical schematic symbols.

Categorization by frame size and option code

The instructions, technical data and dimension drawings which concern only certain drive frame sizes are marked with the symbol of the frame size (R11). The frame size is marked on the type designation label.

The instructions and technical data which concern only certain optional selections are marked with option codes, for example +E208. The options included in the drive can be identified from the option codes visible on the type designation label. The option selections are listed in section Type designation key (page 31).

Quick installation, commissioning and operating flowchart

Task	See
Plan the mechanical and electrical installation and acquire the accessories needed (cables, fuses, etc.). Check the ambient conditions, ratings, required cooling air flow, input power connection, compatibility of the motor, motor connection, and other technical data.	Guidelines for planning the mechanical installation (page 35) Guidelines for planning the electrical installation (page 53) Technical data (page 129) Resistor braking (page 187) Option manual (if optional equipment is included)
Unpack and check the units. Check that all necessary optional modules and equipment are present and correct. Only intact units can be started up.	Moving and unpacking the unit (page 43) Examining the delivery (page 47) If the drive has not been powered (either in storage or unused) for a year or more, the converter DC link capacitors need to be reformed. (Reforming the capacitors (page 123))
Check the installation site. Fasten the base of the cabinet to the floor.	Examining the installation site (page 43) Ambient conditions (page 148)
Route the cables.	Routing the cables (page 68)
Check the insulation of the supply cable, the motor and the motor cable and the resistor cable (if present).	Measuring the insulation (page 82)
Installing the drive module • Install the drive module into the cabinet. • Install the additional components into the cabinet: for example, main disconnector, main contactor, main AC, fuses, etc. • Connect the motor cables to the drive module terminals. • Connect the brake resistor and DC connection cables (if any) to the drive module terminals. • If the main disconnector is installed into the cabinet, connect it to the drive module terminals and the input power cabling to the disconnector. • Connect the cables from the drive module to the external control unit and install the control unit into the cabinet.	Mechanical installation (page 43) Connecting the power cables (page 84) Connecting the external control unit to the drive module (page 89) Attaching the external control unit (page 50) Manuals for any optional equipment
Connect the external control cables to the drive control unit.	Connecting the control cables to the terminals of the external control unit (page 92)
Check the installation.	Installation checklist (page 109)
Commission the drive.	Start-up (page 111)
Commission the brake chopper (if used).	Resistor braking (page 187)
Operate the drive: start, stop, speed control etc.	Appropriate firmware manual

Terms and abbreviations

Term	Description
BGDR	Gate driver board
DDCS	Distributed Drives Communication System. Optical fiber-based industrial protocol.
Drive	Frequency converter for controlling AC motors
DTC	Direct torque control, a motor control method
EMC	Electromagnetic compatibility
EMI	Electromagnetic interference
FAIO-01	Analog I/O extension module
FCAN	Optional CANopen® adapter module
FCNA-01	Optional ControlNet™ adapter module
FDCO-01	DDCS communication module with two pairs of 10 Mbit/s DDCS channels
FDCO-02	DDCS communication module with one pair of 10 Mbit/s and one pair of 5 Mbit/s DDCS channels
FDIO-01	Optional digital I/O extension module
FDNA-01	Optional DeviceNet™ adapter module
FECA-01	Optional EtherCAT® adapter module
FEN-01	Optional TTL incremental encoder interface module
FEN-11	Optional absolute encoder interface module
FEN-21	Optional resolver interface module
FEN-31	Optional HTL incremental encoder interface module
FENA-11	Optional Ethernet adapter module for EtherNet/IP™, Modbus TCP® and PROFINET IO® protocols
FENA-21	Optional Ethernet adapter module for EtherNet/IP™, Modbus TCP and PROFINET IO protocols, 2-port
FEPL-01	Optional Ethernet POWERLINK adapter module
FIO-01	Optional digital I/O extension module
FIO-11	Optional analog I/O extension module
FPBA-01	Optional PROFIBUS DP® adapter module
Frame, frame size	Physical size of the drive or power module
FSCA-01	Optional RS-485 (Modbus/RTU) adapter
FSCS-21	CIP Safety™ functions module
FSE-31	Optional pulse encoder interface module for safety encoder
FSO-12, FSO-21	Optional functional safety modules
FSPS-21	PROFIsafe safety functions module
HTL	High-threshold logic
IGBT	Insulated gate bipolar transistor
IT system	Type of supply network that has no (low-impedance) connection to ground. See IEC 60364-5.
PLC	Programmable logic controller
SAFUR	Series of brake resistors
SOIA	Optical interface adapter board
STO	Safe torque off (IEC/EN 61800-5-2)
TN system	Type of supply network that provides a direct connection to ground
TTL	Transistor-transistor logic
UCU	Type of control unit
ZCU	Type of control unit
ZINT	Main circuit board
ZPOW	Power supply board

Related documents

For more documentation, go to www.abb.com/drives/documents.

ACS880-04 manuals

3

Operation principle and hardware description

Contents of this chapter

This chapter describes the operating principle and construction of the drive module.

Product overview

The ACS880-04F is a drive module for controlling asynchronous AC induction motors, permanent magnet motors, AC induction servomotors and ABB synchronous reluctance motors (SynRM motors).

The main circuit of the drive module is shown below.

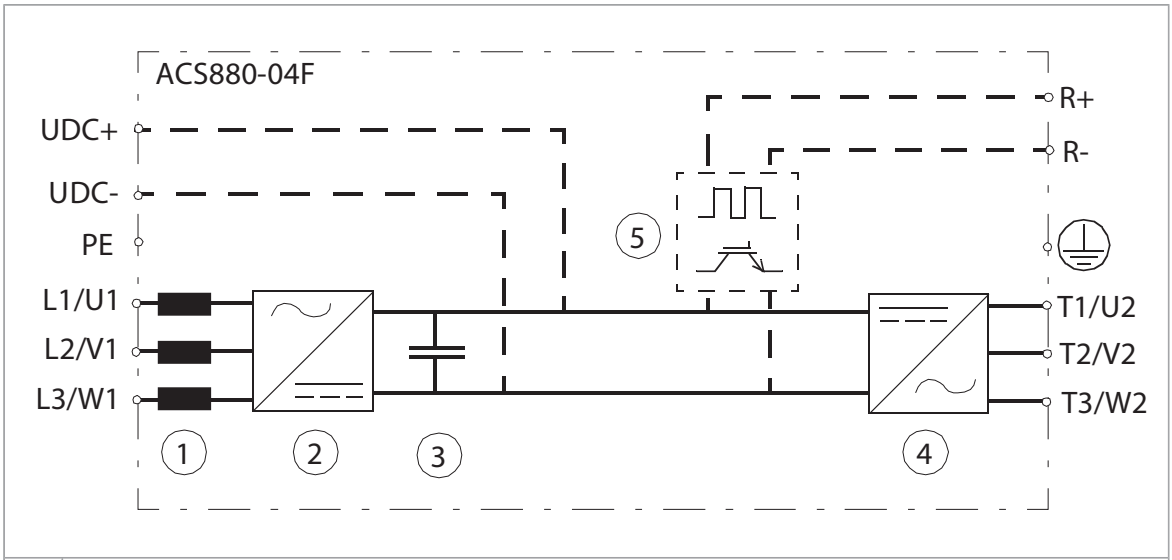

1	AC choke
2	Rectifier. Converts alternating current and voltage to direct current and voltage.
3	DC link. DC circuit between rectifier and inverter.
4	Inverter. Converts direct current and voltage to alternating current and voltage.
5	Brake chopper (option +D150). Conducts the surplus energy from the intermediate circuit of the drive to the brake resistor when necessary. The chopper operates when the DC link voltage exceeds a certain maximum limit. The voltage rise is typically caused by deceleration (braking) of a high inertia motor.

Layout

Standard drive module configuration

A	Front view
B	Back view
1	Drive module
2	Upper front cover
3	Lower front cover
4	Clear plastic shrouds attached
5	Heatsink cleaning hole cover
6	Flange
7	Hood
8	External control unit
9	Control panel
See the part descriptions below.	

1	Clear plastic shroud to be attached onto the drive module input power cabling (a). Entry shroud for side cabling (b).	11	PE (ground) terminal
2	Clear plastic shroud to be attached onto the drive module output power cabling	12	Main cooling fans
3	Clear plastic shroud to be attached on top of the drive module (entry for top cabling)	13	External control unit
4	Upper back clear plastic shroud	14	Control panel
5	Lower back clear plastic shroud	15	Control cable clamp plate
6	Front clear plastic shroud	16	Cables for connecting the control unit to the drive module
7	Input power cable connection terminals (option +H370)	17	Fiber optic cables
8	Output power cable connection terminals	18	Support brackets
9	Grounding terminal for output power cable shields	19	Lifting lugs
10	Metallic shroud. With option +H370, the shroud includes a ground bar.	-	-

Drive module without full-size output cable connection terminals (option +0H371) and IP20 shrouds (option +0B051), with common mode filter (+E208)

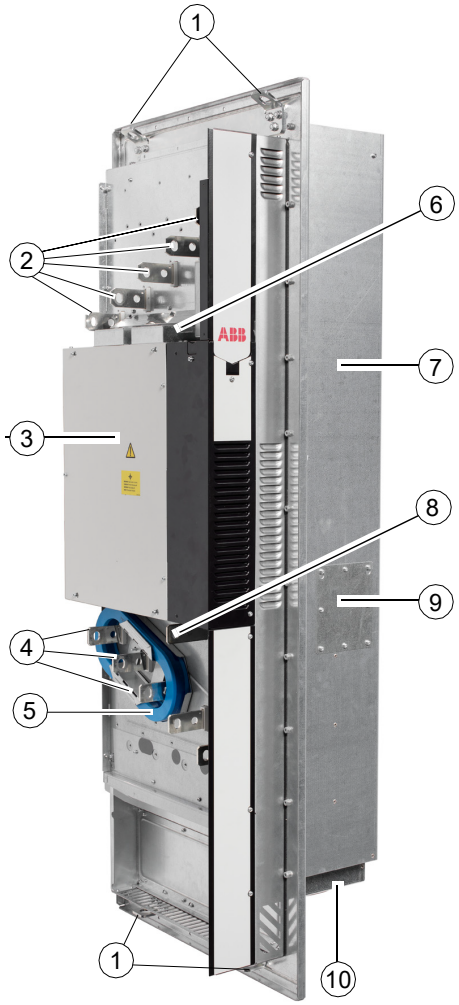

1	Lifting lugs
2	Input cable connection busbars (L1/U1, L2/V1, L3/W1) and DC+ and DC- busbars (UDC+, UCD- with option +H356)
3	Circuit board compartment
4	Output cable connection busbars (T1/U2, T2/V2, T3/W2) and brake resistor connection busbars (R+ and R- with option +D150)
5	Common mode filter (option +E208)
6	Auxiliary cooling fans
7	Heatsink
8	PE busbar
9	Cover on heatsink cleaning hole
10	Main cooling fans

Control unit

See section Standard drive module configuration (page 27)

Overview of power and control connections

The diagram below shows the power connections and control interfaces of the drive unit.

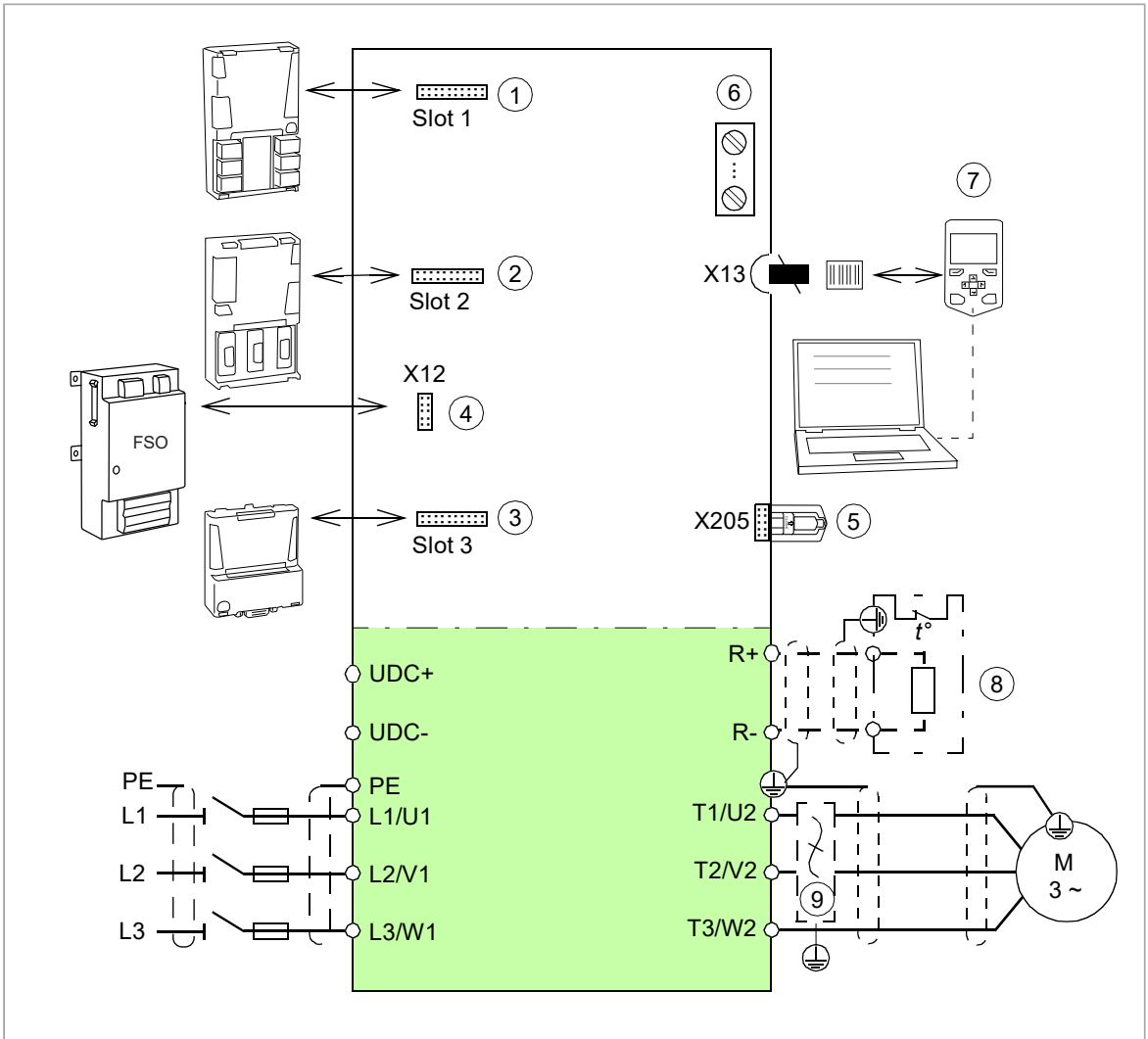

1,2,3	Analog and digital I/O extension modules, feedback interface modules and fieldbus communication modules can be inserted into slots 1, 2 and 3. See section Type designation key (page 31).
4	Connector for the FSO-xx safety functions module (X12). The module can be installed on or above the control unit.
5	Memory unit, see Replacing the memory unit of ZCU-14 (page 124)
6	I/O terminal blocks, see section Default control connection diagram of the drive control unit (ZCU) (page 101)
7	Control panel, see section Connecting a control panel (page 94)
8	Brake resistor (optional, see chapter Resistor braking (page 187))
9	d*u*/d*t* or sine filter (optional, see chapter Filters (page 195))

Type designation label

The type designation label includes a rating, markings, a type designation and a serial number, which allow individual recognition of each drive module. The type designation label is located on the front cover. An example label is shown below.

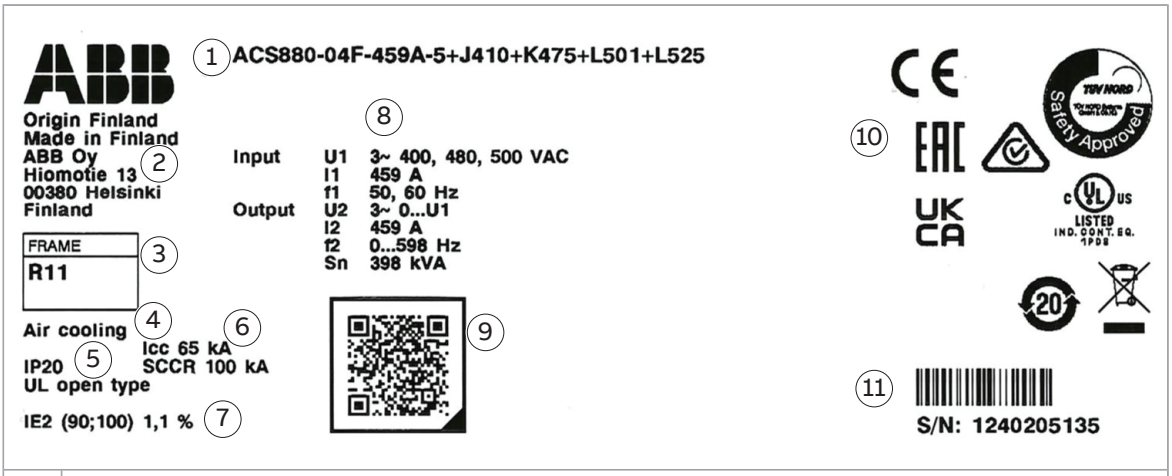

1	Type designation, see section Type designation key (page 31)
2	Manufacturer's address
3	Frame size
4	Cooling method
5	Degree of protection
6	Short-circuit withstand strength, see section Electrical power network specification (page 144)
7	Typical drive losses when it operates at 90% of the motor nominal frequency and 100% of the drive nominal output current (calculated according to IEC61800-9-2).
8	Ratings the supply voltage range, see section Electrical ratings (page 129)
9	Link to product information
10	Valid markings
11	Serial number. The first digit of the serial number refers to the manufacturing plant. The next four digits refer to the unit's manufacturing year and week, respectively. The remaining digits complete the serial number so that there are no two units with the same number.

Type designation key

The type designation contains information on the specifications and configuration of the drive. The first digits from left express the basic drive type. The optional selections are given next, separated by plus signs. Codes that start with zero (eg. +0A123) indicate the absence of a specified feature. The main selections are described below. The list describes the meaning of the option codes, not availability. Not all selections are available for all types or in all regions. For the availabity, refer to the ordering information.

Basic code

Code	Description
ACS880	Product series
Type	
-04F	The standard delivery includes: flange-mounted drive module to be installed in a an enclosure, IP20 (UL Type Open), flat mounting, no pedestal, external control unit, ACS-AP-W Assistant control panel with Bluetooth interface and panel holder, build-in choke, full-size output cable connection terminals, no EMC filter, no DC connection busbars, clear plastic shrouds for covering the input power and motor cable connections, ACS880 primary control program, Safe torque off function, coated boards, printed multilingual quick start-up and installation guides. Refer to section Option codes (page 32) for options.

Code	Description
Size	
-xxxxA	See the rating tables
Voltage range	
-3	380…415 V AC. This is indicated in the type designation label as typical input voltage level (3~ 400 V AC)
-5	380…500 V AC. This is indicated in the type designation label as typical input voltage levels (3~ 400/480/500 V AC)
-7	525…690 V AC. This is indicated in the type designation label as typical input voltage levels (3~ 525/600/690 V AC)

Option codes

Code	Description
0B051	No IP20 shrouds for cabling area
C217	Wall mounting kit (to be used, if the module is mounted on the wall from its back instead of the flange)
D150	Brake choppers
E200	EMC filter for 2nd environment TN (grounded) system, category C3
E201	EMC filter for 2nd environment IT (ungrounded) system, category C3
E208	Common mode filter
0H371	No full size cable connection terminals for output power cables
H356	DC connection busbars
H370	Full-size input terminals
0J400	No control panel
J410	DPMP-01 door mounting kit
J413	DPMP-02 door mounting kit (surface mounting) for the panel
J425	ACS-AP-I control panel
J461	ACS-DCP-11 drive connectivity panel (EU variant)
K451	FDNA-01 DeviceNet™ adapter module
K454	FPBA-01 PROFIBUS DP adapter module
K457	FCAN-01 CANopen adapter module
K458	FSCA-01 RS-485 (Modbus/RTU) adapter module
K462	FCNA-01 ControlNet™ adapter module
K469	FECA-01 EtherCat adapter module
K470	FEPL-02 EtherPOWERLINK adapter module
K475	FENA-21 Ethernet adapter module for EtherNet/IP™, Modbus TCP and PROFINET IO protocols, 2-port
K490	FEIP-21 EtherNet/IP adapter module
K491	FMBT-21 Modbus/TCP adapter module
K492	FPNO-21 PROFINET IO adapter module
L500	FIO-11 analog I/O extension module (1, 2 or 3 pcs)
L501	FIO-01 digital I/O extension module
L502	FEN-31 HTL incremental encoder interface module
L503	FDCO-01 optical DDCS communication adapter module

Code	Description
L508	FDCO-02 optical DDCS communication adapter module
L516	FEN-21 resolver interface module
L517	FEN-01 TTL incremental encoder interface module
L518	FEN-11 TTL absolute encoder interface module
L525	FAIO-01 analog I/O extension module
L526	FDIO-01 digital I/O extension module
L536	FPTC-01 thermistor protection module
L537	FPTC-02 ATEX-certified thermistor protection module
N5000	Winder control program
N5050	Crane control program
N5100	Winch control program
N5150	Centrifuge control program
N5200	PCP (Progressive Cavity Pump) control program
N5250	Rod pump control program
N5350	Cooling tower control program
N5450	Override control program
N5500	Spinning and traverse control program
N5600	ESP (Electrical Submersible Pump) control program
N5650	Tower crane control program
N5700	Position control program
N5900	Anti-cavitation control program
N7502	Control program for synchronous reluctance motors (SynRM)
N8010	Drive application programming
N8200	Dual-use license for an operating range of 600 Hz and more
P904	Extended warranty (24 months from commissioning or 30 months from delivery)
Q971	ATEX-certified safe disconnection function
Q972	FSO-21 safety functions module
Q973	FSO-12 safety functions module
Q982	PROFIsafe with FSO-xx safety function module and FPNO-21 PROFInet adapter or FENA-21 Ethernet adapter module
Q986	PROFIsafe safety functions module, FSPS-21
Q989	CIP Safety™ functions module, FSCS-21
R700	Printed manuals in English
V998	UCU-20 control unit

4

Guidelines for planning the mechanical installation

Contents of this chapter

This chapter guides in planning drive cabinets and installing the drive module into a user-defined cabinet. The chapter gives cabinet layout examples and free space requirements around the module for cooling. These drive-specific guidelines are essential for the safe and trouble-free use of the drive system.

Installation alternatives

The drive module can be installed from the flange onto a cabinet wall or a mounting plate with the heatsink (degree of protection IP55) in a cooling air channel or outside protected against humidity, dust and chemical gases according to the ambient conditions requirements given in section Ambient conditions (page 148). The control circuit compartment side of the module (degree of protection IP20) is to be installed in clean air. The drive module can also be installed from the heatsink with mounting brackets (option 3AXD50000303533).

The drive module can be cabled from top or bottom to cable connection terminals or sideways with busbars directly to the module busbars at its side.

Channel installation

Basic requirements for the channel wall

The channel wall where the drive module is mounted on must be non-flammable and sturdy enough to carry the weight of the drive module.

Installation principle

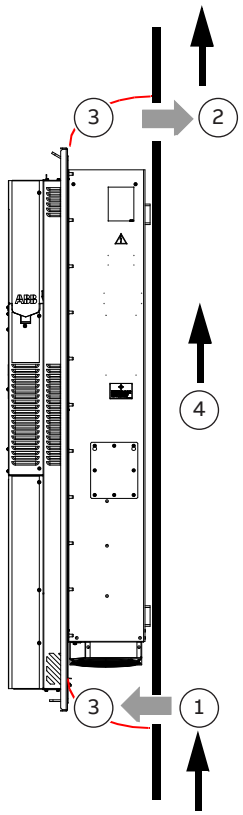

1	Cool air in, max. 40 °C (104 °F)
2	Hot air out
3	Air guide
4	Air flow in the cooling air channel

Cabinet installation

Layout example, outside view

This figure shows a cabinet layout example with the input power cable entry from top and the motor cable entry from bottom.

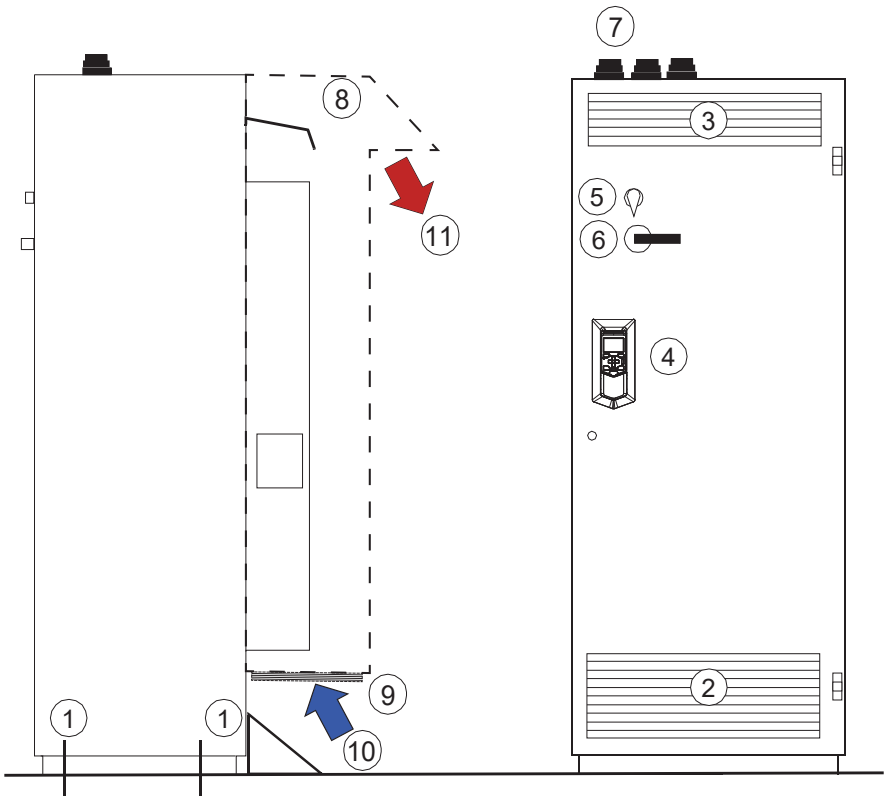

1	**WARNING** Attach the cabinet to the floor or prop it up from the back. The module has its center of gravity at the back and the cabinet easily topples over.
2	Air inlet for the power cable connection and circuit board compartment part of drive module and for other equipment. For losses and cooling data requirements, see the technical data.
3	Air outlet for the power cable connection and circuit board compartment part of drive module and other equipment
4	Drive control panel with DPMP-01 mounting platform (option +J410). The control panel is connected to the drive module control unit inside the cabinet.
5	Contactor control switch and emergency stop switch (connected to the contactor control circuit inside the cabinet)
6	Operating handle of the disconnector
7	Rubber grommets for degree of protection
8	Addtional enclosure for outdoor installation in harsh environment **Note:** Heatsink is not suitable for direct outdoor exposure without additional protection against sand, rain or corrosive gases, see Ambient conditions (page 148).
9	Cooling air filter
10	Cool air in
11	Hot air out

Layout example, inside view

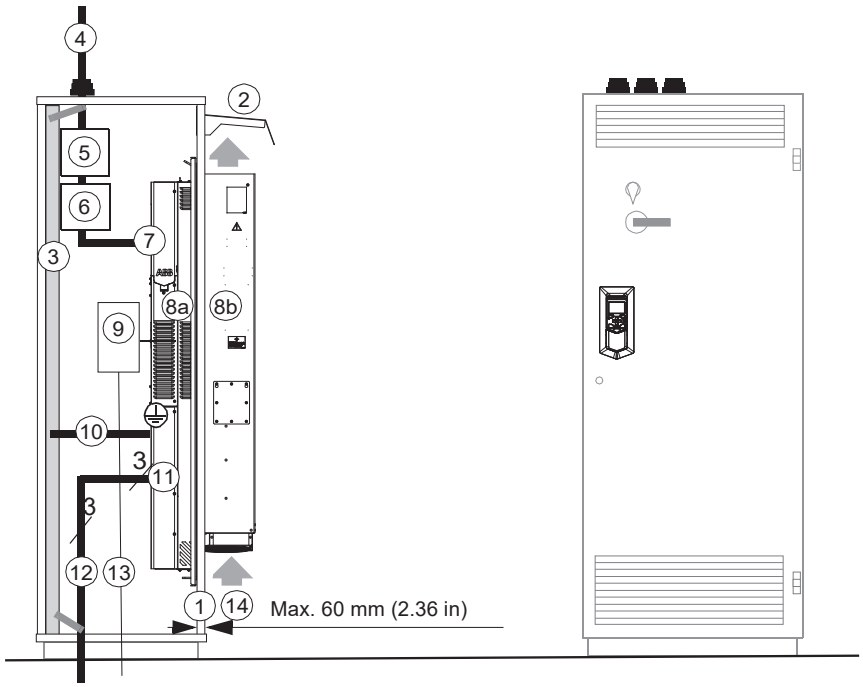

1	Cabinet back plate. The maximum allowed depth of the back plate is 60 mm (2.36 in.) in order not to cover the air flow grate at the top of the heatsink.	8	Drive module front part (a), drive module heatsink part (b)
2	Hood	9	Drive module control unit
3	Cabinet grounding busbar (PE)	10	Grounding conductor
4	Input power cable including the protective ground conductor (PE) of the drive	11	Motor cable connection terminals/busbars
5	Disconnector and fuses	12	Motor cable including the protective ground conductor of the drive module
6	Contactor	13	External control cables
7	Input power cable connection terminals/bus-bars	14	Air flow

Note: The power cable shields can also be grounded to the drive module grounding terminals.

Note: For option +B051: When the bottom grille and clear plastic shrouds around the motor cables are installed, the degree of protection of the drive module from bottom side is IP20.

Note: See also Required free space (page 41).

Mounting the control panel on the cabinet door

You can use a mounting platform to mount the control panel on the cabinet door. Mounting platforms for control panels are available as options from ABB. For more information, see

Manual	Code (English)
DPMP-01 mounting platform for control panels installation guide	3AUA0000100140
DPMP-02/03 mounting platform for control panels installation guide	3AUA0000136205
DPMP-04 and DPMP-05 mounting platform for control panels installation guide	3AXD50000308484
DPMP-06/07 mounting platform for control panels installation guide	3AXD50000289561

DPMP-01	DPMP-02	DPMP-04
IP54 (UL Type 12) when control panel is mounted IP20 (UL Open Type) when control panel is not mounted	IP65 (UL Type 12) when control panel is mounted IP20 (UL Open Type) when control panel is not mounted	IP66 (UL Types 3, 3R and 4) when mounted inside or outside the cabinet door

DPMP-06	DPMP-07
UL Type 12 when panel is mounted. UL open when panel is not mounted.	UL Type 12 when panel is mounted. UL open when panel is not mounted.

Installation positions other than vertical

You can install the drive module on its back. Make sure that the hot cooling air which flows upwards from the module does not cause danger.

For other installation positions, contact ABB.

Required free space

Free space around the drive module is needed to make sure that sufficient cooling air flows through the module and the module cools correctly.

The required free space at the top and bottom of the drive module is shown below. The modules can be installed side by side.

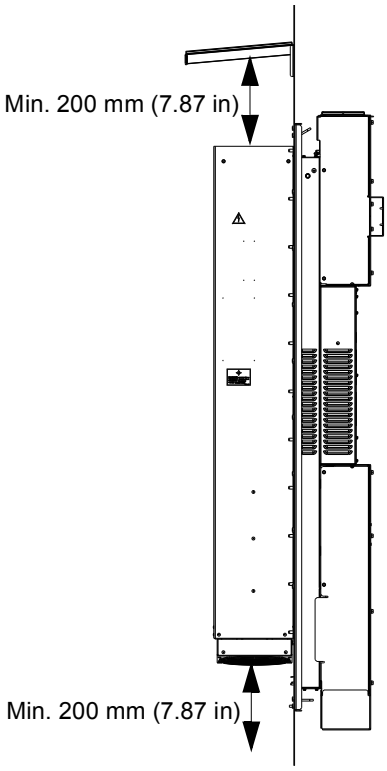

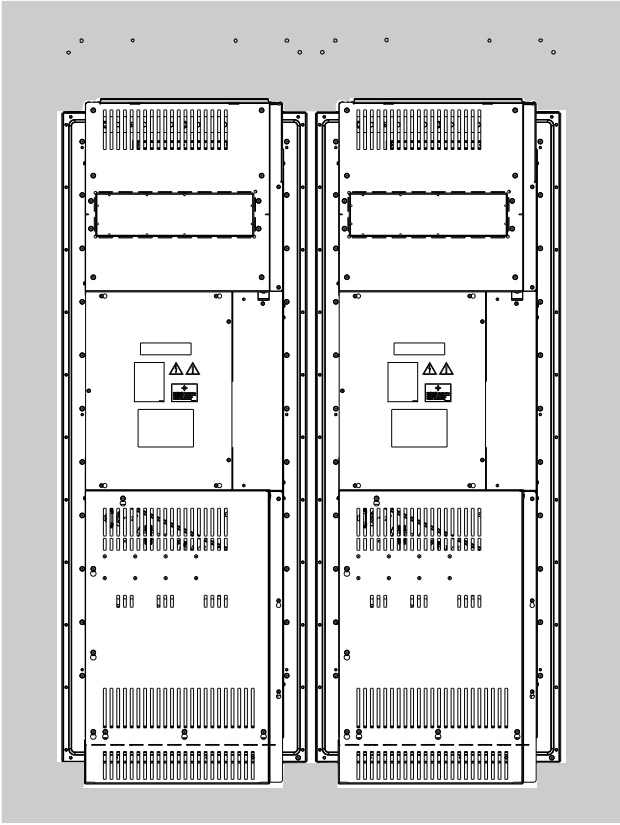

5

Mechanical installation

Contents of this chapter

This chapter describes how to install the drive module mechanically without the clear plastic shrouds. The shrouds are attached after the power cabling.

Examining the installation site

Examine the installation site. Make sure that:

- The installation site is sufficiently ventilated or cooled to remove heat from the drive. Refer to the technical data.
- The ambient conditions of the drive meet the specifications. Refer to the technical data.
- The material behind, above, and below the drive is non-flammable.
- There is sufficient free space around the drive for cooling, maintenance work, and operation. Refer to the free space specifications for the drive.
- There are no sources of strong magnetic fields such as high-current single-core conductors or contactor coils near the drive. A strong magnetic field can cause interference or inaccuracy in the operation of the drive.

Moving and unpacking the unit

WARNING Obey the safety instructions of the drive. If you ignore them, injury or death, or damage to the equipment can occur.

Move the transport package by pallet truck to the installation site.

Unpacking

Unpack the package as follows, see section Package drawings (page 45):

- Cut the bands.
- Lift the top lid. If top boxes (B1) are included, lift them off, and remove the lower lid.
- Lift the inner and outer sheathings.
- Remove the additional boxes and supports.

Package drawings

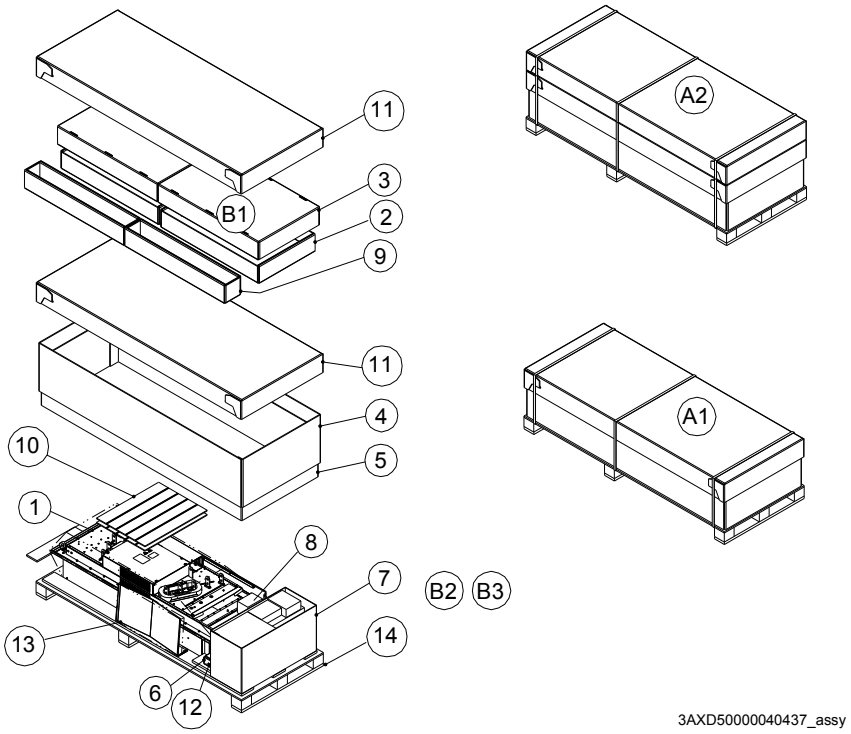

A1	Package with no IP20 shrouds for cabling area (option 0B051)
A2	Standard drive module package
1	Drive module with factory installed options, delivery documents, multilingual residual voltage warning sticker, printed quick installation and start-up guide.
2	Top box B1 bottom (with standard drive module configuration). Contains IP20 shrouds for cabling area. See below for the box B1 contents.
3	Top box B1 cover
4	Outer sheathing
5	Inner sheathing
6	Accessories box: screw package, spacers for FSO module installation, rubber grommets for control unit cable entry holes in the middle front cover of the drive module.
7	Accessory sleeve containing: • external control unit • output cable connection terminal box (B2, see below for the box contents) • input cable connection terminal box (option +H370, B3, see below for the box contents) • control panel door mounting kit
8	If all options do not fit in the accessory sleeve, the rest are packed in this space on the drive module
9	Cardboard support tray
10	Cardboard support
11	Cardboard lids
12	Wall mounting brackets with screws for attaching the drive module heatsink by the top and bottom to a mounting plate or wall (option +C217). The brackets bring a gap for cooling air flow and prevent the drive module screws from chafing the plate. See section Attaching the drive module by the heatsink (page 49).
13	Hood
14	Pallet

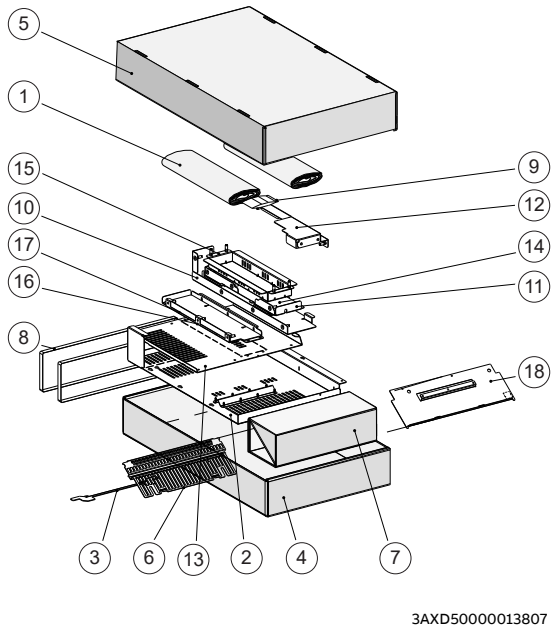

Box B1 contents (standard drive module configuration)	
1	Paper fill
2	Clear plastic shroud for output power cabling
3	Mounting bracket for bottom grille
4	Cardboard box bottom
5	Cardboard box cover
6	Bottom grille
7	Support
8	Straps
9	Screws in a plastic bag
10	Back clear plastic shroud (upper)
11	Back clear plastic shroud (lower)
12	Front clear plastic shroud
13	Clear plastic shroud for input power cabling
14	Top clear plastic shroud
15	Entry clear plastic shroud for side input cabling
16	Clear plastic bottom shroud 1
17	Clear plastic bottom shroud 2
18	Metallic shroud

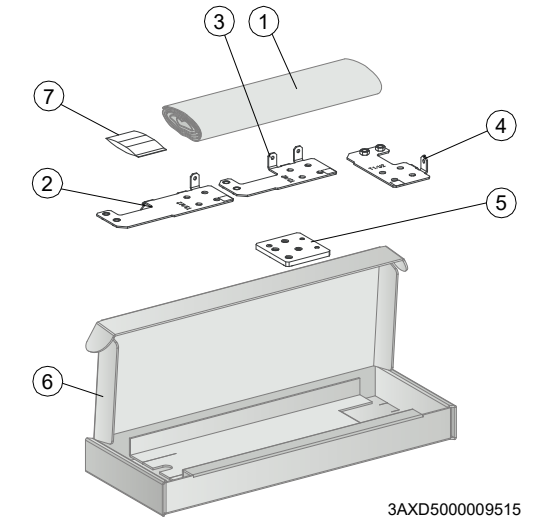

Box B2 contents (standard drive module configuration)	
1	Paper fill
2	Output cable connection terminal T3/W2
3	Output cable connection terminal T2/V2
4	Output cable connection terminal T1/U2
5	Grounding terminal
6	Cardboard box
7	Screws and insulators a plastic bag

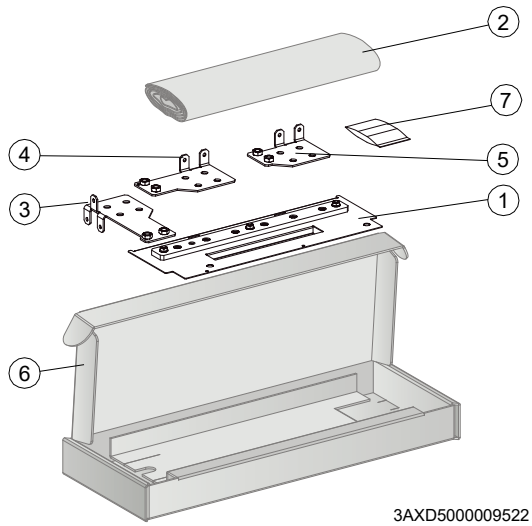

Box B3 contents (option +H370)	
1	Metallic shroud with ground bar
2	Paper fill
3	Input cable connection terminal L3/W1
4	Input cable connection terminal L2/V1
5	Input cable connection terminal L1/U1
6	Cardboard box
7	Screws and insulators in a plastic bag

Examining the delivery

Make sure that all items listed in section Moving and unpacking the unit (page 43) are present.

Make sure that there are no signs of damage. Before you start the installation and operation, see the information on the type designation label of the drive to make sure that it is of the correct type.

Lifting

Insert lifting hooks to the drive module lifting eyes and lift the module to the installation place.

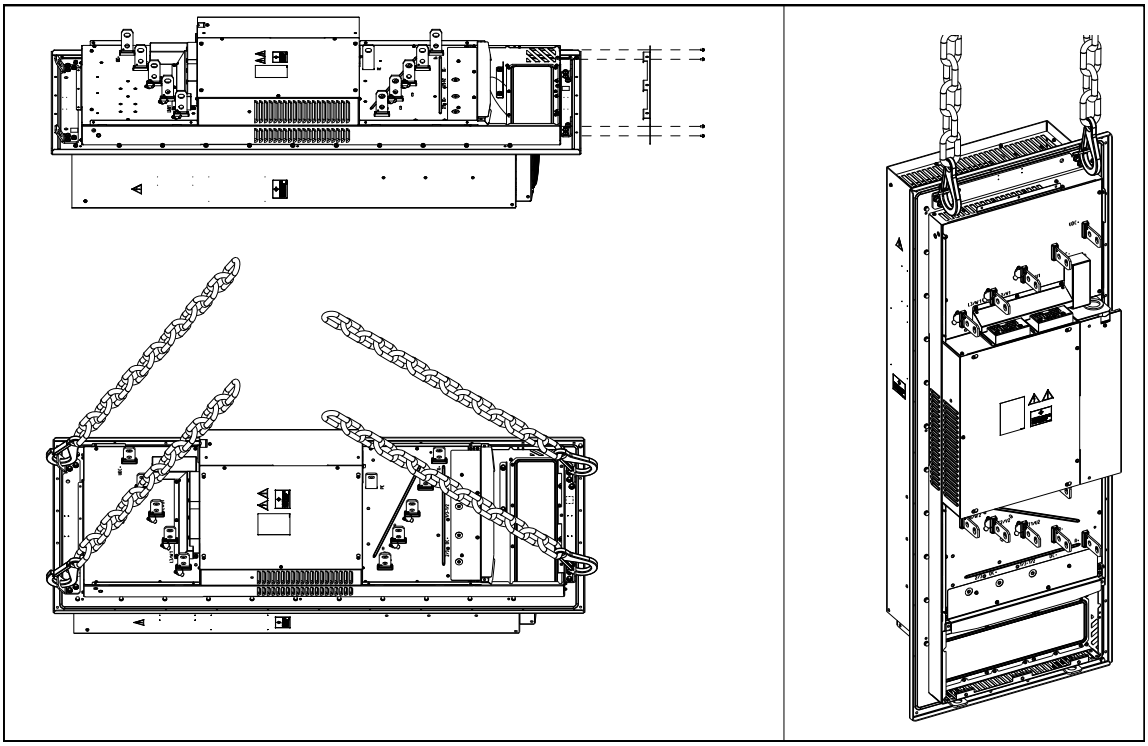

Attaching alternatives

Attaching the drive module by the flange

See section Mounting plate opening (page 164) for the mounting point and mounting plate opening dimensions.

1. Make an opening to the mounting plate for the drive module heatsink penetration.
2. Attach the drive module flange to the mounting plate with screws.
3. For UL Type 12 installations and if otherwise needed: Attach the hood.

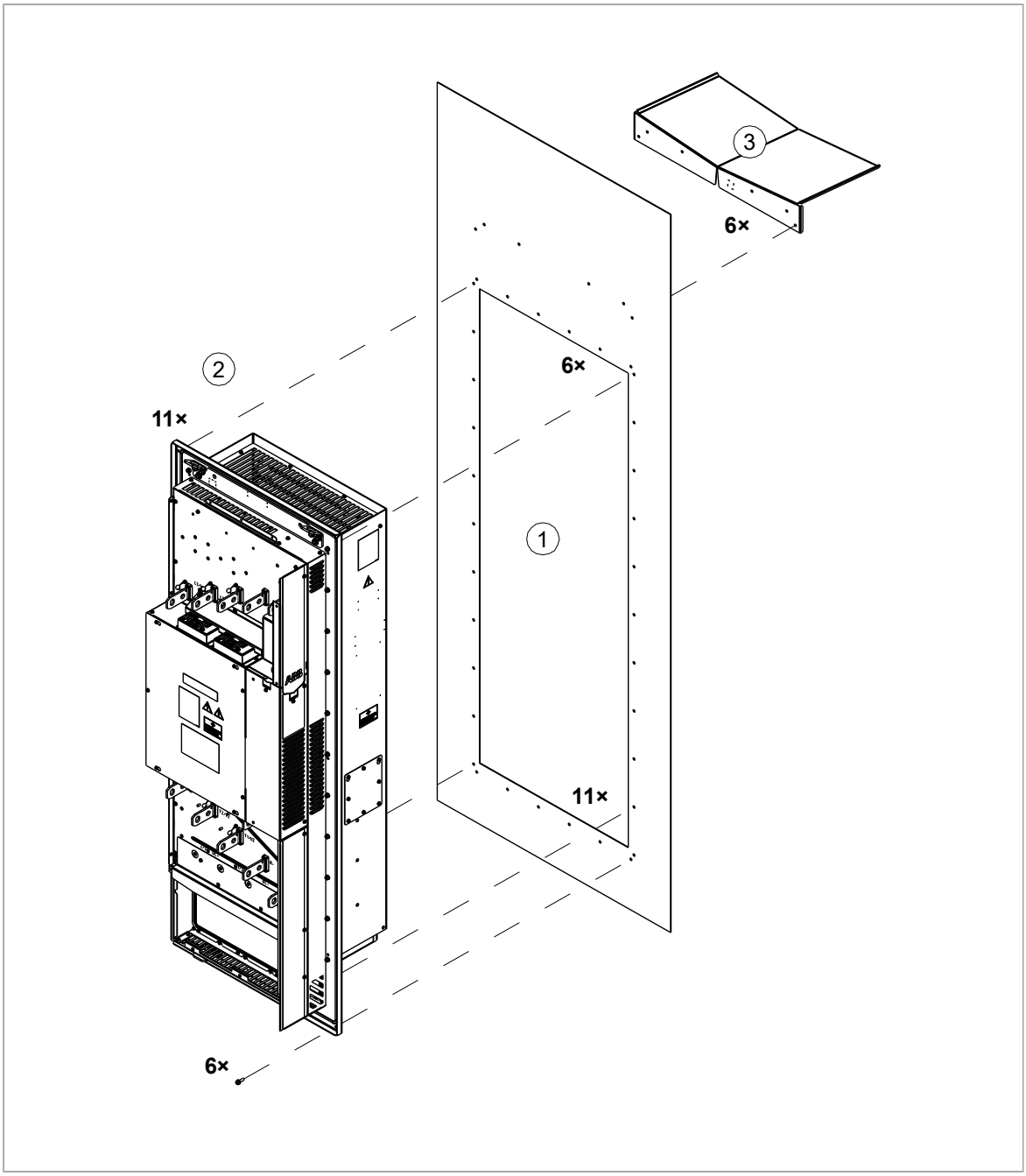

Attaching the drive module by the heatsink

1. Attach the support brackets to the heatsink back.
2. Attach the support brackets to the wall.

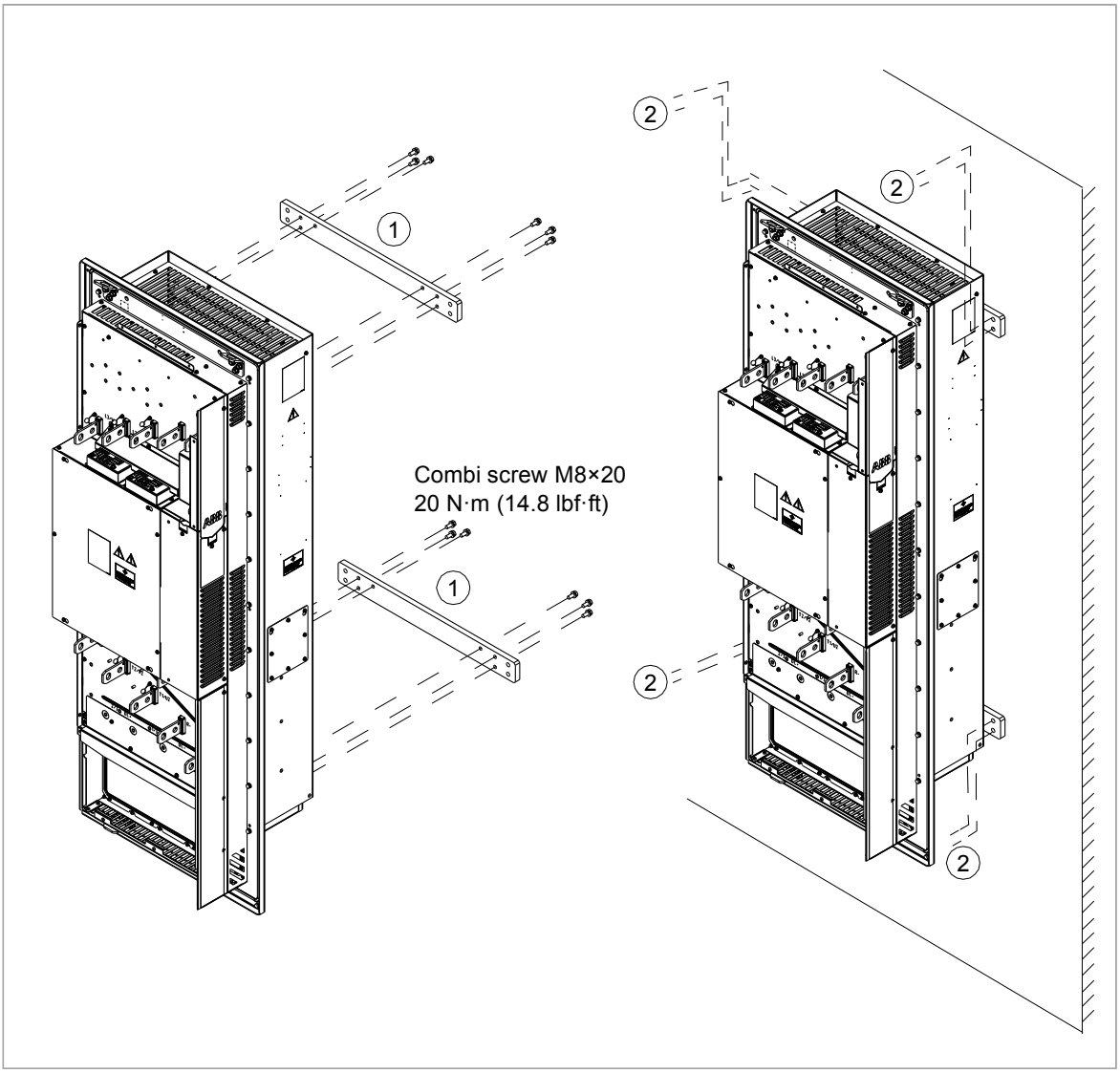

Attaching the metallic shroud (standard)

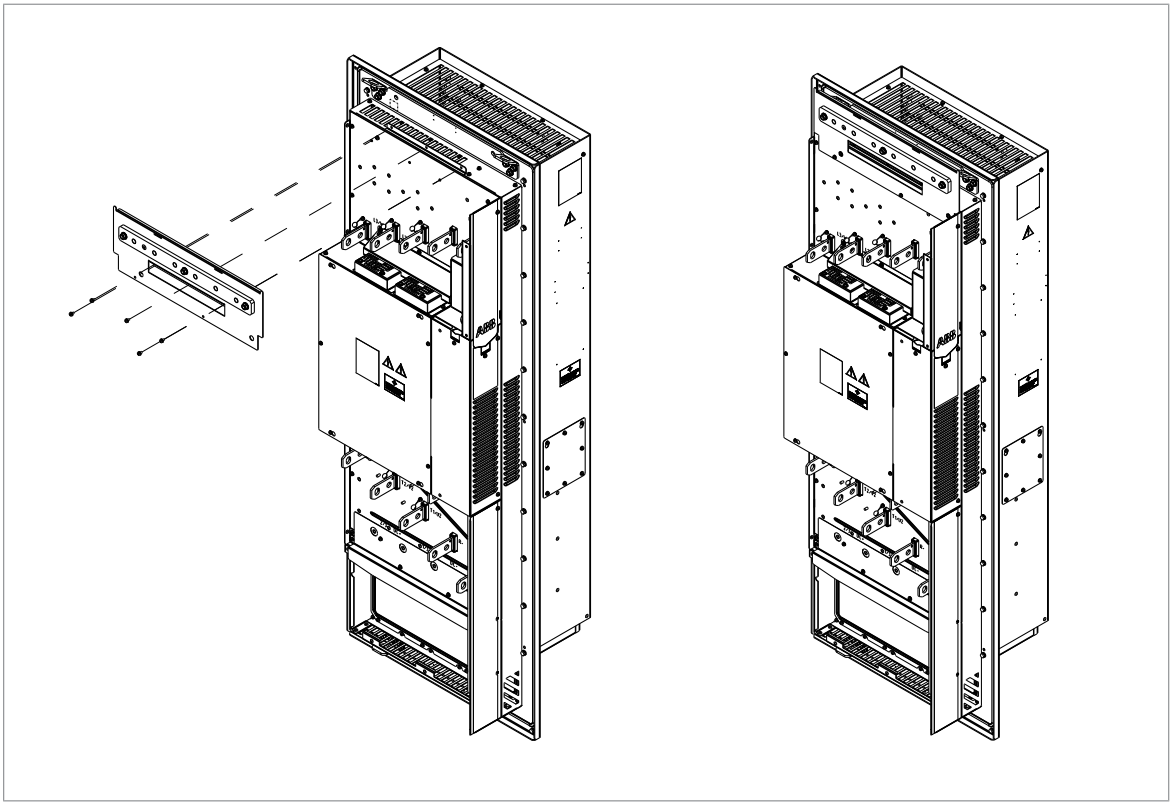

Attaching the external control unit

The drive control unit can be attached on a mounting plate or onto a DIN rail.

Connect the fiber optic, power supply and BGDR cables from the drive module to the external control unit before you attach the control unit. See section Connecting the external control unit to the drive module (page 89).

Attaching the external control unit to a mounting plate or wall

The external control unit and its mounting template are delivered in a cardboard box inside the drive module package. The mounting template contains a mounting pattern for two different control units, one on each side. Make sure to use the ZCU-14 control unit mounting pattern.

1. Mark the positions of the fastening screws to the wall through the mounting template.
2. Attach the screws.
3. Lift the control unit onto the screws and tighten the screws.

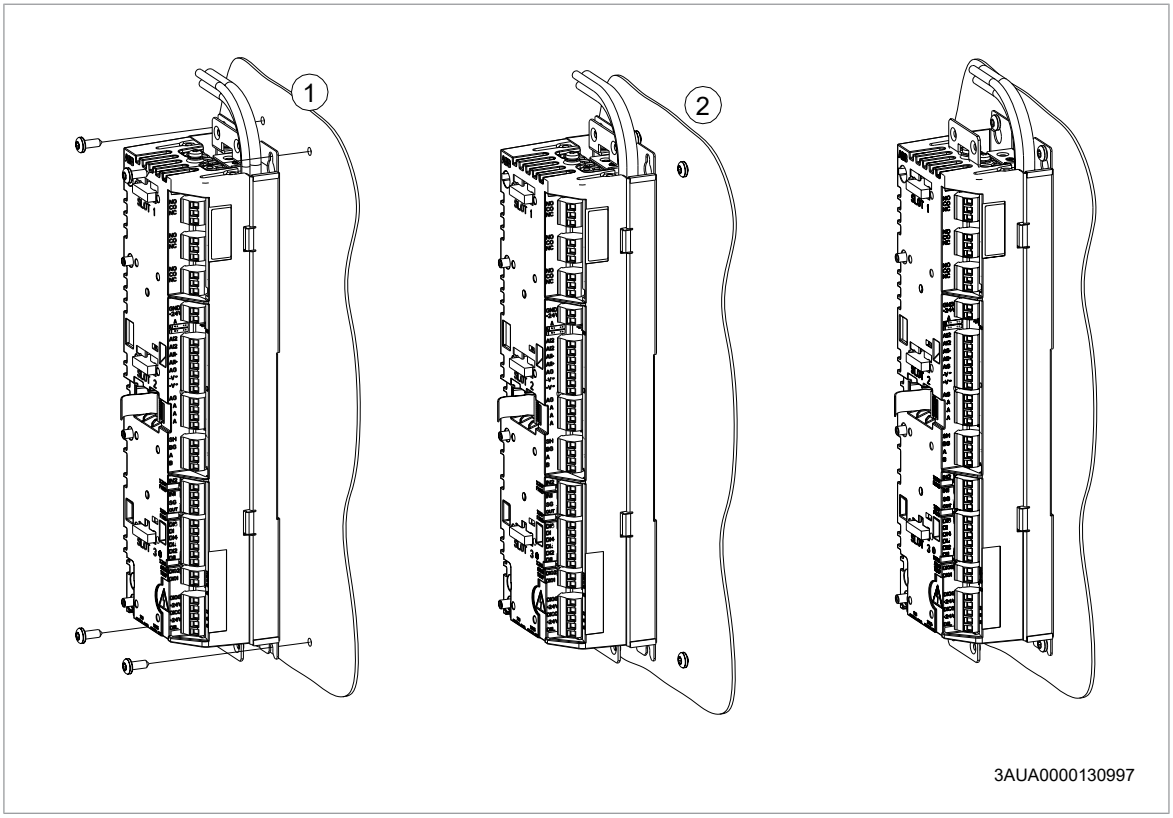

Attaching the external control unit vertically on a DIN rail

1. Attach the latch (A) to the back of the control unit with three screws.
2. Click the control unit to the rail as shown below (B).

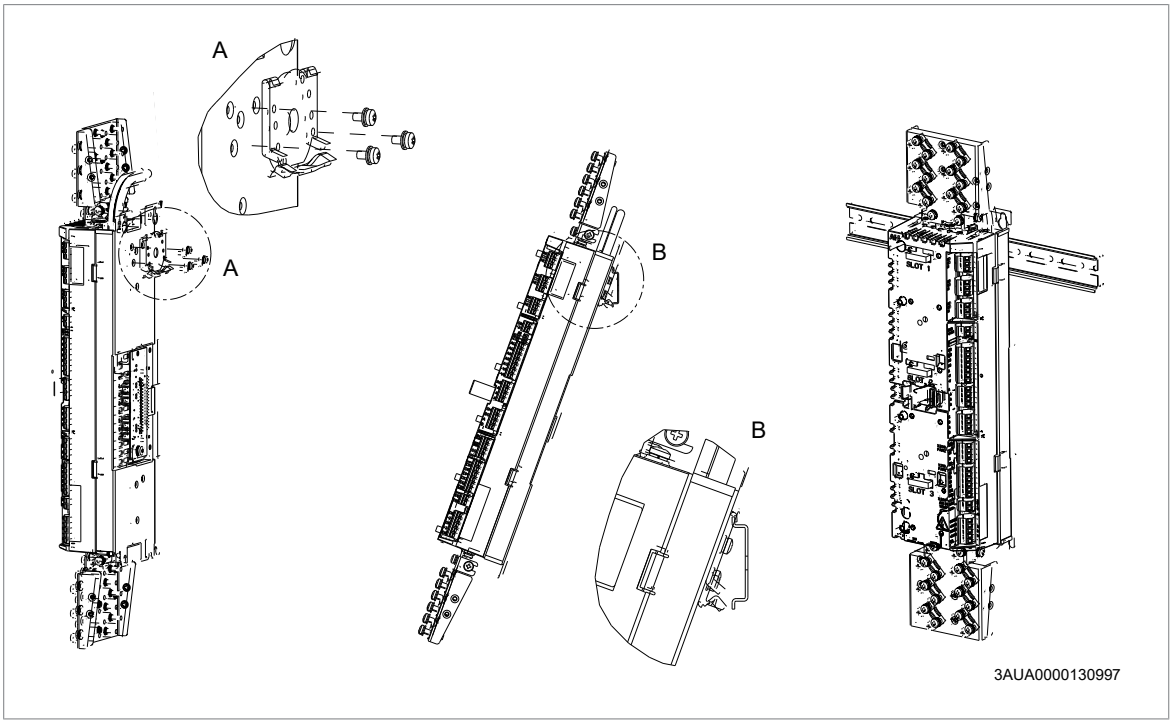

Attaching the external control unit horizontally on a DIN rail

1. Attach the latches (A) to the back of the control unit with three screws.
2. Click the control unit to the rail as shown below (B).

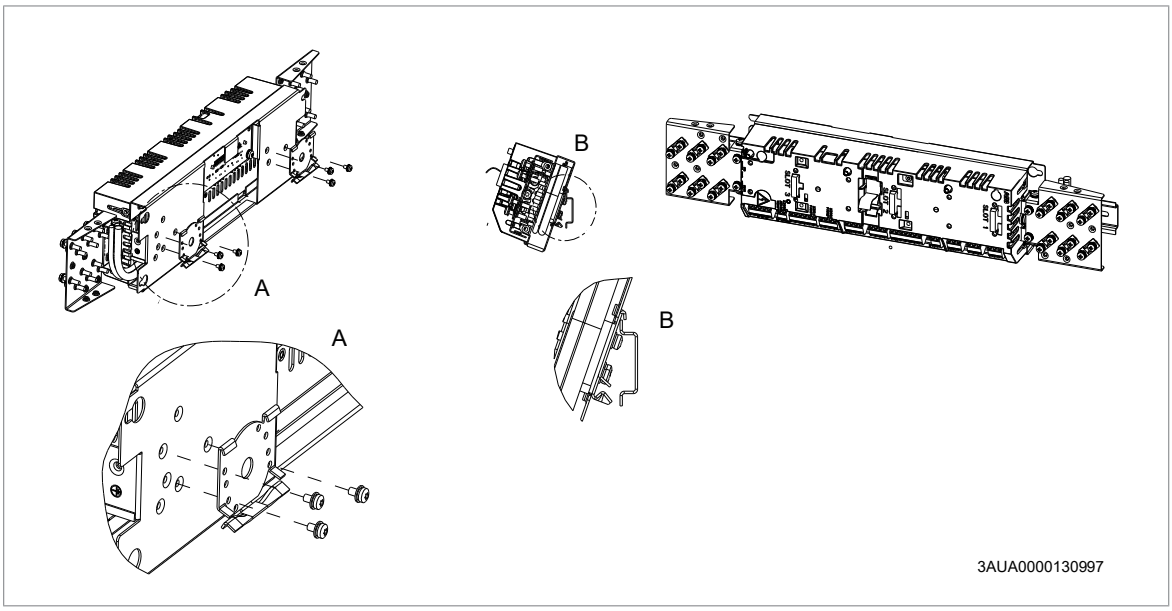

6

Guidelines for planning the electrical installation

Contents of this chapter

This chapter contains guidelines for planning the electrical installation of the drive.

Limitation of liability

The installation must always be designed and made according to applicable local laws and regulations. ABB does not assume any liability whatsoever for any installation which breaches the local laws and/or other regulations. Furthermore, if the recommendations given by ABB are not followed, the drive may experience problems that the warranty does not cover.

North America

Installations must be compliant with NFPA 70 (NEC)[1)] and/or Canadian Electrical Code (CE) along with state and local codes for your location and application.

[1)] National Fire Protection Association 70 (National Electric Code).

Selecting the main supply disconnecting device

You must equip the drive with a main supply disconnecting device which meets the local safety regulations. You must be able to lock the disconnecting device to the open position for installation and maintenance work.

To comply with European Union directives and United Kingdom regulations related to standard EN 60204-1, the disconnecting device must be one of these types:

- switch-disconnector of utilization category AC-23B (IEC 60947-3)
- disconnector that has an auxiliary contact that in all cases causes switching devices to break the load circuit before the opening of the main contacts of the disconnector (EN 60947-3)
- circuit-breaker suitable for isolation in accordance with IEC 60947-2.

Selecting the main contactor

You can equip the drive with a main contactor.

Follow these guidelines when you select a customer-defined main contactor:

- Dimension the contactor according to the nominal voltage and current of the drive. Also consider the environmental conditions such as surrounding air temperature.
- IEC installations: Select contactor with utilization category AC-1 (number of operations under load) according to IEC 60947-4.
- Consider the application life time requirements.

Examining the compatibility of the motor and drive

Use asynchronous AC induction motors, permanent magnet synchronous motors, AC induction servomotors or ABB synchronous reluctance motors (SynRM motors) with the drive.

Select the motor size and drive type from the rating table on basis of the AC line voltage and motor load. You can find the rating table in the appropriate hardware manual. You can also use the DriveSize PC tool.

Make sure that the motor can be used with an AC drive. See Requirements tables (page 55). For basics of protecting the motor insulation and bearings in drive systems, see Protecting the motor insulation and bearings (page 54).

Note:

- Consult the motor manufacturer before using a motor with nominal voltage that differs from the AC line voltage connected to the drive input.
- The voltage peaks at the motor terminals are relative to the supply voltage of the drive, not to the drive output voltage.

Protecting the motor insulation and bearings

The drive employs modern IGBT inverter technology. Regardless of frequency, the drive output comprises pulses of approximately the drive DC bus voltage with a very short rise time. The pulse voltage can almost double at the motor terminals, depending on the attenuation and reflection properties of the motor cable and the terminals. This can cause additional stress on the motor and motor cable insulation.

Modern variable speed drives with their fast rising voltage pulses and high switching frequencies can generate current pulses that flow through the motor bearings. This can gradually erode the bearing races and rolling elements.

d*u*/d*t* filters protect motor insulation system and reduce bearing currents. Common mode filters mainly reduce bearing currents. Insulated N-end (non-drive end) bearings protect the motor bearings.

Requirements tables

These tables show how to select the motor insulation system and when a drive d*u*/d*t* and common mode filters and insulated N-end (non-drive end) motor bearings are required. Ignoring the requirements or improper installation may shorten motor life or damage the motor bearings and voids the warranty.

Requirements for ABB motors, P_n < 100 kW (134 hp)

See also Abbreviations (page 58).

Motor type	Nominal AC line voltage	Requirement for	
		Motor insulation system	ABB d*u*/d*t* and common mode filters, insulated N-end motor bearings
			P_n < 100 kW and frame size < IEC 315
			P_n < 134 hp and frame size < NEMA 500
Random-wound M2_, M3_ and M4_	U_n ≤ 500 V	Standard	-
	500 V < U_n ≤ 600 V	Standard	+ d*u*/d*t*
		Reinforced	-
	600 V < U_n ≤ 690 V	Reinforced (+405 special insulation)	-[1]
Form-wound HX_ and AM_	380 V < U_n ≤ 690 V	Standard	N/A
Old[2] form-wound HX_ and modular	380 V < U_n ≤ 690 V	Check with the motor manufacturer.	+ N + d*u*/d*t* with voltages over 500 V + CMF
Random-wound HX_ and AM_ [3]	0 V < U_n ≤ 500 V	Enamelled wire with fiber glass taping	+ N + CMF
	500 V < U_n ≤ 690 V		+ N + d*u*/d*t* + CMF
HDP	Consult the motor manufacturer.		

[1] Not applicable to motors for explosive atmospheres. Refer to Low voltage Motors for explosive atmospheres catalog.
[2] manufactured before 1.1.1998
[3] For motors manufactured before 1.1.1998, check for additional instructions with the motor manufacturer.

Requirements for ABB motors, $P_n \geq 100$ kW (134 hp)

See also Abbreviations (page 58).

Motor type	Nominal AC line voltage	Requirement for		
		Motor insulation system	ABB d*u*/d*t* and common mode filters, insulated N-end motor bearings	
			100 kW ≤ P_n < 350 kW or IEC 315 ≤ frame size < IEC 400	P_n ≥ 350 kW or frame size ≥ IEC 400
			134 hp ≤ P_n < 469 hp or NEMA 500 ≤ frame size ≤ NEMA 580	P_n ≥ 469 hp or frame size > NEMA 580
Random-wound M2_, M3_ and M4_	U_n ≤ 500 V	Standard	+ N	+ N + CMF
	500 V < U_n ≤ 600 V	Standard	+ N + d*u*/d*t*	+ N + d*u*/d*t* + CMF
		Reinforced	+ N	+ N + CMF
	600 V < U_n ≤ 690 V	Reinforced (+405 special insulation)	+ N [1]	+ N + CMF [1]
Form-wound HX_ and AM_	380 V < U_n ≤ 690 V	Standard	+ N + CMF	P_n < 500 kW: +N + CMF
				P_n ≥ 500 kW: +N + d*u*/d*t* + CMF
Old [2] form-wound HX_ and modular	380 V < U_n ≤ 690 V	Check with the motor manufacturer.	+ N + d*u*/d*t* with voltages over 500 V + CMF	
Random-wound HX_ and AM_ [3]	0 V < U_n ≤ 500 V	Enamelled wire with fiber glass taping	+ N + CMF	
	500 V < U_n ≤ 690 V		+ N + d*u*/d*t* + CMF	
HDP	Consult the motor manufacturer.			

[1] Not applicable to motors for explosive atmospheres. Refer to Low voltage Motors for explosive atmospheres catalog.
[2] manufactured before 1.1.1998
[3] For motors manufactured before 1.1.1998, check for additional instructions with the motor manufacturer.

Requirements for non-ABB motors, P_n < 100 kW (134 hp)

See also Abbreviations (page 58).

Motor type	Nominal AC line voltage	Requirement for	
		Motor insulation system	ABB d*u*/d*t* and common mode filters, insulated N-end motor bearings
			P_n < 100 kW and frame size < IEC 315
			P_n < 134 hp and frame size < NEMA 500
Random-wound and form-wound	U_n ≤ 420 V	Standard: $\hat{U}_{LL}$ = 1300 V	-
	420 V < U_n ≤ 500 V	Standard: $\hat{U}_{LL}$ = 1300 V	+ d*u*/d*t*
		Reinforced: $\hat{U}_{LL}$ = 1600 V, 0.2 µs rise time	-
	500 V < U_n ≤ 600 V	Reinforced: $\hat{U}_{LL}$ = 1600 V	+ d*u*/d*t*
		Reinforced: $\hat{U}_{LL}$ = 1800 V	-
	600 V < U_n ≤ 690 V	Reinforced: $\hat{U}_{LL}$ = 1800 V	+ d*u*/d*t*
		Reinforced: $\hat{U}_{LL}$ = 2000 V, 0.3 µs rise time[1)]	-

1) If the intermediate DC circuit voltage of the drive is increased from the nominal level due to long term resistor braking cycles, check with the motor manufacturer if additional output filters are needed.

Requirements for non-ABB motors, $P_n \geq 100$ kW (134 hp)

See also Abbreviations (page 58).

Motor type	Nominal AC line voltage	Requirement for		
		Motor insulation system	ABB d*u*/d*t* and common mode filters, insulated N-end motor bearings	
			100 kW ≤ P_n < 350 kW or IEC 315 ≤ frame size < IEC 400	P_n ≥ 350 kW or frame size ≥ IEC 400
			134 hp ≤ P_n < 469 hp or NEMA 500 ≤ frame size ≤ NEMA 580	P_n ≥ 469 hp or frame size > NEMA 580
Random-wound and form-wound	U_n ≤ 420 V	Standard: $\hat{U}_{LL}$ = 1300 V	+ N or CMF	+ N + CMF
	420 V < U_n ≤ 500 V	Standard: $\hat{U}_{LL}$ = 1300 V	+ d*u*/d*t* + (N or CMF)	+ N + d*u*/d*t* + CMF
		Reinforced: $\hat{U}_{LL}$ = 1600 V, 0.2 µs rise time	+ N or CMF	+ N + CMF
	500 V < U_n ≤ 600 V	Reinforced: $\hat{U}_{LL}$ = 1600 V	+ d*u*/d*t* + (N or CMF)	+ N + d*u*/d*t* + CMF
		Reinforced: $\hat{U}_{LL}$ = 1800 V	+ N or CMF	+ N + CMF
	600 V < U_n ≤ 690 V	Reinforced: $\hat{U}_{LL}$ = 1800 V	+ d*u*/d*t* + N	+ N + d*u*/d*t* + CMF
		Reinforced: $\hat{U}_{LL}$ = 2000 V, 0.3 µs rise time[1)]	+ N + CMF	+ N + CMF

1) If the intermediate DC circuit voltage of the drive is increased from the nominal level due to long term resistor braking cycles, check with the motor manufacturer if additional output filters are needed.

Abbreviations

Abbr.	Definition
U_n	Nominal AC line voltage
$\hat{U}_{LL}$	Peak line-to-line voltage at motor terminals which the motor insulation must withstand
P_n	Motor nominal power
d*u*/d*t*	d*u*/d*t* filter at the output of the drive
CMF	Common mode filter of the drive
N	N-end bearing: insulated motor non-drive end bearing
n.a.	Motors of this power range are not available as standard units. Consult the motor manufacturer.

Availability of d*u*/d*t* filter and common mode filter by drive type

Product type	Availability of d*u*/d*t* filter	Availability of common mode filter (CMF)
ACS880-04F	Ordered separately, see section d*u*/d*t* filters (page 195)	+E208

Additional requirements for explosion-safe (EX) motors

If you use an explosion-safe (EX) motor, obey the rules in the requirements table above. In addition, consult the motor manufacturer for any further requirements.

Additional requirements for ABB motors of types other than M2_, M3_, M4_, HX_ and AM_

Use the selection criteria given for non-ABB motors.

Additional requirements for braking applications

When the motor brakes the machinery, the intermediate circuit DC voltage of the drive increases, the effect being similar to the motor supply voltage increasing by up to 20 percent. Consider this voltage increase when specifying the motor insulation requirements if the motor will be braking a large part of its operation time.

Example: Motor insulation requirement for a 400 V AC line voltage application must be selected as if the drive were supplied with 480 V.

Additional requirements for ABB high-output and IP23 motors

The rated output power of high output motors is higher than what is stated for the particular frame size in EN 50347 (2001).

This table shows the requirements for protecting the motor insulation and bearings in drive systems for ABB random-wound motor series (for example, M3AA, M3AP and M3BP).

Nominal AC supply voltage	Requirement for			
	Motor insulation system	ABB d*u*/d*t* and common mode filters, insulated N-end motor bearings		
		P_n < 100 kW	100 kW ≤ P_n < 200 kW	P_n ≥ 200 kW
		P_n < 140 hp	140 hp ≤ P_n < 268 hp	P_n ≥ 268 hp
U_n ≤ 500 V	Standard	-	+ N	+ N + CMF
500 V < U_n ≤ 600 V	Standard	+ d*u*/d*t*	+ d*u*/d*t* + N	+ d*u*/d*t* + N + CMF
	Reinforced	-	+ N	+ N + CMF
600 V < U_n ≤ 690 V	Reinforced	+ d*u*/d*t*	+ d*u*/d*t* + N	+ d*u*/d*t* + N + CMF

Additional requirements for non-ABB high-output and IP23 motors

The rated output power of high-output motors is higher than what is stated for the particular frame size in EN 50347 (2001).

If you plan to use a non-ABB high-output motor or an IP23 motor, consider these additional requirements for protecting the motor insulation and bearings in drive systems:

- If motor power is below 350 kW: Equip the drive and/or motor with the filters and/or bearings according to the table below.
- If motor power is above 350 kW: Consult the motor manufacturer.

Nominal AC supply voltage	Requirement for		
	Motor insulation system	**ABB d*u*/d*t* and common mode filters, insulated N-end motor bearings**	
		P_n < 100 kW or frame size < IEC 315	**100 kW < P_n < 350 kW or IEC 315 < frame size < IEC 400**
		P_n < 134 hp or frame size < NEMA 500	**134 hp < P_n < 469 hp or NEMA 500 < frame size < NEMA 580**
$U_n \leq 420$ V	Standard: $\hat{U}_{LL}$ = 1300 V	+ N or CMF	+ N or CMF
420 V < U_n < 500 V	Standard: $\hat{U}_{LL}$ = 1300 V	+ d*u*/d*t* + (N or CMF)	+ N + d*u*/d*t* + CMF
	Reinforced: $\hat{U}_{LL}$ = 1600 V, 0.2 microsecond rise time	+ N or CMF	+ N or CMF
500 V < $U_n \leq 600$ V	Reinforced: $\hat{U}_{LL}$ = 1600 V	+ d*u*/d*t* + (N or CMF)	+ N + d*u*/d*t* + CMF
	Reinforced: $\hat{U}_{LL}$ = 1800 V	+ N or CMF	+ N + CMF
600 V < $U_n \leq 690$ V	Reinforced: $\hat{U}_{LL}$ = 1800 V	+ N + d*u*/d*t*	+ N + d*u*/d*t* + CMF
	Reinforced: $\hat{U}_{LL}$ = 2000 V, 0.3 microsecond rise time[1)]	+ N + CMF	+ N + CMF

1) If the intermediate DC circuit voltage of the drive is increased from the nominal level due to long term resistor braking cycles, check with the motor manufacturer if additional output filters are needed.

Additional data for calculating the rise time and the peak line-to-line voltage

The diagrams below show the relative peak line-to-line voltage and rate of change of voltage as a function of the motor cable length. If you need to calculate the actual peak voltage and voltage rise time considering the actual cable length, proceed as follows:

- Peak line-to line voltage: Read the relative $\hat{U}_{LL}/U_n$ value from the diagram below and multiply it by the nominal supply voltage (U_n).
- Voltage rise time: Read the relative values $\hat{U}_{LL}/U_n$ and $(du/dt)/U_n$ from the diagram below. Multiply the values by the nominal supply voltage (U_n) and substitute into equation $t = 0.8 \cdot \hat{U}_{LL}/(du/dt)$.

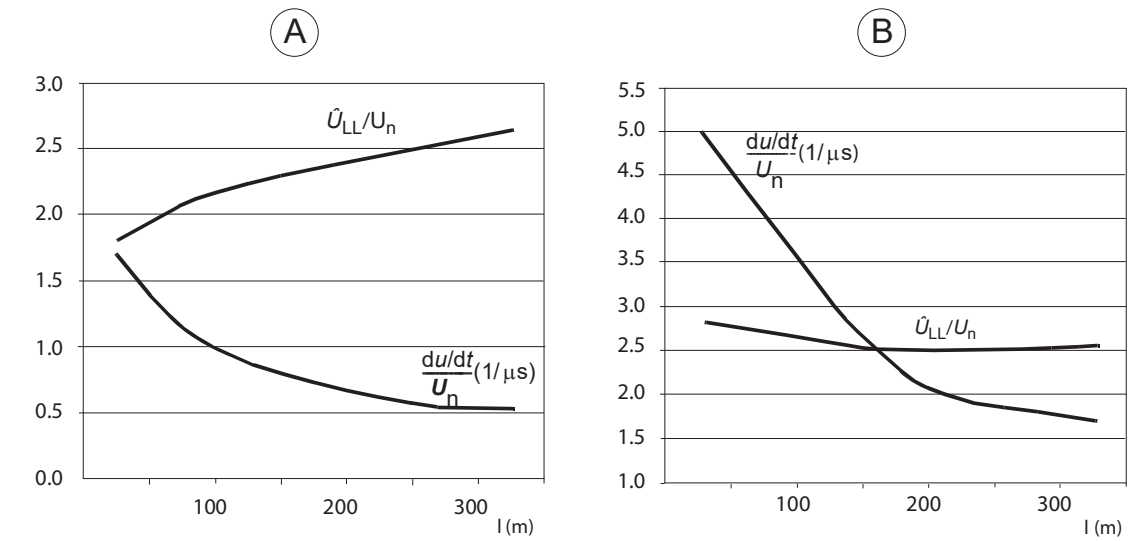

A	Drive with d*u*/d*t* filter
B	Drive without d*u*/d*t* filter
l	Motor cable length
$\hat{U}_{LL}/U_n$	Relative peak line-to-line voltage
$(du/dt)/U_n$	Relative d*u*/d*t* value
Note: $\hat{U}_{LL}$ and d*u*/d*t* values are approximately 20% higher with resistor braking.	

Additional note for sine filters

A sine filter also protects the motor insulation system. The peak phase-to-phase voltage with a sine filter is approximately 1.5 · U_n.

Selecting the power cables

General guidelines

Select the input power and motor cables according to local regulations.

- **Current:** Select a cable capable of carrying the maximum load current and suitable for the prospective short-circuit current provided by the supply network. The method of installation and ambient temperature affect the cable current carrying capacity. Obey local regulations and laws.
- **Temperature:** For an IEC installation, select a cable rated for at least 70 °C (158 °F) maximum permissible temperature of conductor in continuous use.
  For North America, select a cable rated for at least 75 °C (167 °F).
  Important: For certain product types or option configurations higher temperature rating may be required. See the technical data for details.
- **Voltage:** 600 V AC cable is accepted for up to 500 V AC. 750 V AC cable is accepted for up to 600 V AC. 1000 V AC cable is accepted for up to 690 V AC.

To comply with the EMC requirements of the CE mark, use one of the preferred cable types. See Preferred power cable types (page 62).

Symmetrical shielded cable reduces electromagnetic emission of the whole drive system as well as the stress on motor insulation, bearing currents and wear.

Metal conduit reduces electromagnetic emission of the whole drive system.

Typical power cable sizes

See the technical data in the appropriate hardware manual.

Power cable types

Preferred power cable types

This section shows the preferred cable types. Make sure that the selected cable type also complies with local/state/country electrical codes.

Cable type	Use as input power cabling	Use as motor cabling and as brake resistor cabling
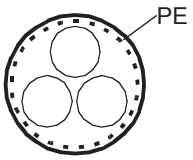 Symmetrical shielded (or armored) cable with three phase conductors and concentric PE conductor as shield (or armor)	Yes	Yes
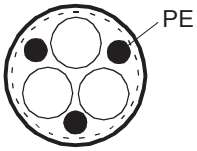 Symmetrical shielded (or armored) cable with three phase conductors and symmetrically constructed PE conductor and a shield (or armor)	Yes	Yes
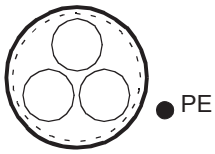 Symmetrical shielded (or armored) cable with three phase conductors and a shield (or armor), and separate PE conductor/cable[1)]	Yes	Yes

[1)] A separate PE conductor is required if the conductivity of the shield (or armor) is not sufficient for the PE use.

Alternate power cable types

Cable type	Use as input power cabling	Use as motor cabling and as brake resistor cabling
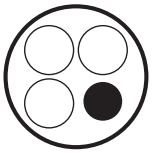 Four-conductor cable in plastic jacket (three phase conductors and PE)	Yes with phase conductor smaller than 10 mm² (8 AWG) Cu.	Yes with phase conductor smaller than 10 mm² (8 AWG) Cu, or motors up to 30 kW (40 hp). **Note:** Shielded or armored cable, or cabling in metal conduit is always recommended to minimize radio frequency interference.
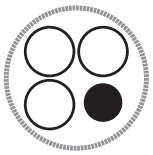 Four-conductor armored cable (three phase conductors and PE)	Yes	Yes with phase conductor smaller than 10 mm² (8 AWG) Cu, or motors up to 30 kW (40 hp)
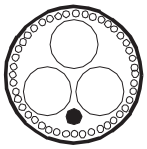 Shielded (Al/Cu shield or armor)[1] four-conductor cable (three phase conductors and a PE)	Yes	Yes with motors up to 100 kW (135 hp). A potential equalization between the frames of motor and driven equipment is required.
A single-core cable system: three phase conductors and PE conductor on cable tray 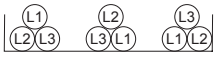 Preferable cable arrangement to avoid voltage or current unbalance between the phases	Yes **⚠WARNING** If you use unshielded single-core cables in an IT network, make sure that the non-conductive outer sheath (jacket) of the cables have good contact with a properly grounded conductive surface. For example, install the cables on a properly grounded cable tray. Otherwise voltage may become present on the non-conductive outer sheath of the cables, and there is even a risk of an electric shock.	No

[1] Armor may act as an EMC shield, as long as it provides the same performance as a concentric EMC shield of a shielded cable. To be effective at high frequencies, the shield conductivity must be at least 1/10 of the phase conductor conductivity. The effectiveness of the shield can be evaluated based on the shield inductance, which must be low and only slightly dependent on frequency. The requirements are easily met with a copper or aluminum shield/armor. The cross-section of a steel shield must be ample and the shield helix must have a low gradient. A galvanized steel shield has a better high-frequency conductivity than a non-galvanized steel shield.

Not allowed power cable types

Cable type	Use as input power cabling	Use as motor cabling and as brake resistor cabling
Symmetrical shielded cable with individual shields for each phase conductor	No	No

Additional guidelines – North America

ABB recommends the use of metallic conduit for power wiring. ABB also recommends the use of symmetrical shielded VFD cable between drive and motor(s).

This table shows examples of methods for wiring the drive. Refer to NFPA 70 (NEC) along with state and local codes for the appropriate methods for your application.

Wiring method	Notes
Conduit - Metallic [1] [2]	
Electrical metallic tubing: Type EMT	Prefer symmetrical shielded VFD cable. Use separate conduit run for each motor. Do not run input power wiring and motor wiring in the same conduit.
Rigid metal conduit: Type RMC	
Liquid-tight flexible metal electrical conduit: Type LFMC	
Conduit - Non-metallic [2] [3]	
Liquid-tight flexible non-metallic conduit: Type LFNC	Prefer symmetrical shielded VFD cable. Use separate conduit run for each motor. Do not run input power wiring and motor wiring in the same conduit.
Wireways [2]	
Metallic	Prefer symmetrical shielded VFD cable. Separate motor wiring from input power wiring and other low voltage wiring. Do not run outputs of multiple drives parallel. Bundle each cable (wiring) together and use separators where possible.
Free air [2]	
Enclosures, air handlers, etc.	Prefer symmetrical shielded VFD cable. Allowed internally in enclosures when in accordance with UL.

[1] Metallic conduit may be used as an additional ground path, provided this path is a solid path capable of handling ground currents.
[2] See NFPA NFPA 70 (NEC), UL, and local codes for your application.
[3] Non-metallic conduit use underground is allowed; however, these installations inherently have an increased chance for nuisance problems due to the potential for water/moisture in the conduit. Water/moisture in the conduit increases the likelihood of VFD faults or warnings. Proper installation is required to make sure there is no intrusion of water/moisture.

Metal conduit

Couple separate parts of a metal conduit together: bridge the joints with a ground conductor bonded to the conduit on each side of the joint. Also bond the conduits to

the drive enclosure and motor frame. Use separate conduits for input power, motor, brake resistor, and control wiring. Do not run motor wiring from more than one drive in the same conduit.

Power cable shield

If the cable shield is used as the sole protective earth (PE) conductor, make sure that its conductivity agrees with the PE conductor requirements.

To effectively suppress radiated and conducted radio-frequency emissions, the cable shield conductivity must be at least 1/10 of the phase conductor conductivity. The requirements are easily met with a copper or aluminum shield. The minimum requirement of the motor cable shield of the drive is shown below. It consists of a concentric layer of copper wires with an open helix of copper tape or copper wire. The better and tighter the shield, the lower the emission level and bearing currents.

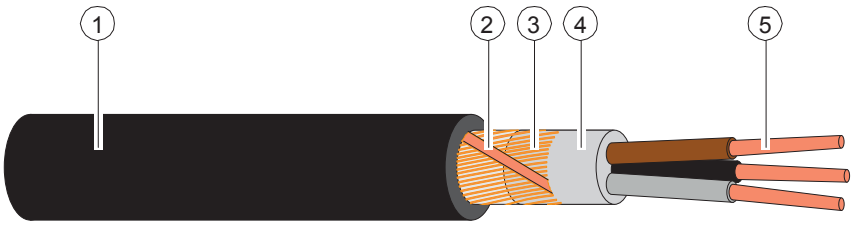

1	Insulation jacket
2	Helix of copper tape or copper wire
3	Copper wire shield
4	Inner insulation
5	Cable core

Grounding requirements

This section gives general requirements for grounding the drive. When you plan the grounding of the drive, obey all the applicable national and local regulations.

The conductivity of the protective earth conductor(s) must be sufficient.

Unless local wiring regulations state otherwise, the cross-sectional area of the protective earth conductor must agree with the conditions that require automatic disconnection of the supply required in 411.3.2 of IEC 60364-4-41:2005 and be capable of withstanding the prospective fault current during the disconnection time of the protective device. The cross-sectional area of the protective earth conductor must be selected from the table below or calculated according to 543.1 of IEC 60364-5-54.

The table shows the minimum cross-sectional area of the protective earth conductor related to the phase conductor size according to IEC/UL 61800-5-1 when the phase conductor(s) and the protective earth conductor are made of the same metal. If they are different metals, the cross-sectional area of the protective earth conductor must

be determined in a manner which produces a conductance equivalent to that which results from the application of this table.

Cross-sectional area of the phase conductors S (mm^2)	Minimum cross-sectional area of the corresponding protective earth conductor S_p (mm^2)
S ≤ 16	S [1)]
16 < S ≤ 35	16
35 < S	S/2

[1)] For the minimum conductor size in IEC installations, refer to Additional grounding requirements – IEC (page 66).

If the protective earth conductor is not part of the input power cable or input power cable enclosure, the minimum permitted cross-sectional area is:

- 2.5 mm^2 if the conductor is mechanically protected,
  or
- 4 mm^2 if the conductor is not mechanically protected. If the equipment is cord-connected, the protective earth conductor must be the last conductor to be interrupted if there is a failure in the strain relief mechanism.

Additional grounding requirements – IEC

This section gives grounding requirements according to standard IEC/EN 61800-5-1.

Because the normal touch current of the drive is more than 3.5 mA AC or 10 mA DC:

- the minimum size of the protective earth conductor must comply with the local safety regulations for high protective earth conductor current equipment, and
- you must use one of these connection methods:
  1. a fixed connection and:
     - a protective earth conductor with a minimum cross-sectional area of 10 mm^2 Cu or 16 mm^2 Al (as an alternative when aluminum cables are permitted),
       or
     - a second protective earth conductor of the same cross-sectional area as the original protective earth conductor,
       or
     - a device that automatically disconnects the supply if the protective earth conductor is damaged.
  2. a connection with an industrial connector according to IEC 60309 and a minimum protective earth conductor cross-section of 2.5 mm^2 as part of a multi-conductor power cable. Sufficient strain relief must be provided.

If the protective earth conductor is routed through a plug and socket, or similar means of disconnection, it must not be possible to disconnect it unless power is simultaneously removed.

Note: You can use power cable shields as protective earth conductors only when their conductivity is sufficient.

Additional grounding requirements – UL (NEC)

This section gives grounding requirements according to standard UL 61800-5-1.

The protective earth conductor must be sized as specified in Article 250.122 and table 250.122 of the National Electric Code, ANSI/NFPA 70.

For cord-connected equipment, it must not be possible to disconnect the protective earth conductor before power is removed.

Selecting the control cables

Shielding

Only use shielded control cables.

Use a double-shielded twisted pair cable for analog signals. ABB recommends this type of cable also for the pulse encoder signals. Use one individually shielded pair for each signal. Do not use common return for different analog signals.

A double-shielded cable (a) is the best alternative for low-voltage digital signals, but single-shielded (b) twisted pair cable is also acceptable.

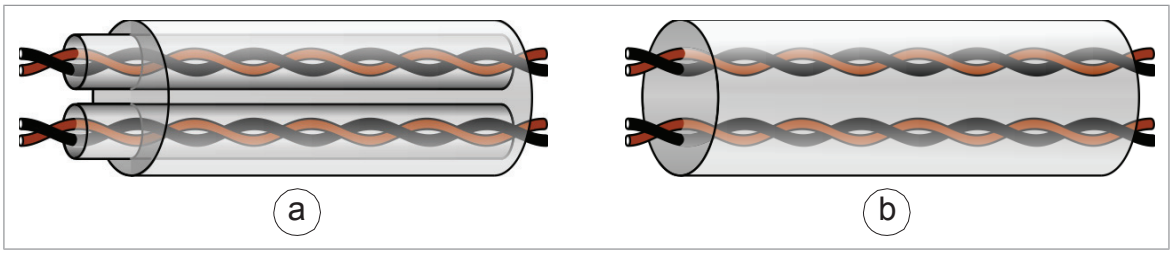

Signals in separate cables

Run analog and digital signals in separate, shielded cables. Do not mix 24 V DC and 115/230 V AC signals in the same cable.

Signals that can be run in the same cable

If their voltage does not exceed 48 V, relay-controlled signals can be run in the same cables as digital input signals. The relay-controlled signals should be run as twisted pairs.

Relay cable

The cable type with braided metallic shield (for example ÖLFLEX by LAPPKABEL, Germany) has been tested and approved by ABB.

Control panel to drive cable

Use EIA-485, Cat 5e (or better) cable with male RJ45 connectors. The maximum length of the cable is 100 m (328 ft).

PC tool cable

Connect the Drive Composer PC tool to the drive through the USB port of the control panel. Use a USB Type A (PC) - Type Mini-B (control panel) cable. The maximum length of the cable is 3 m (9.8 ft).

Routing the cables

General guidelines – IEC

- Route the motor cable away from other cables. Motor cables of several drives can be run in parallel installed next to each other.
- Install the motor cable, input power cable and control cables on separate trays.
- Avoid long parallel runs of motor cables with other cables.
- Where control cables must cross power cables, make sure that they are arranged at an angle as near to 90 degrees as possible.
- Do not run extra cables through the drive.
- Make sure that the cable trays have good electrical bonding to each other and to the grounding electrodes. Aluminum tray systems can be used to improve local equalizing of potential.

The following figure illustrates the cable routing guidelines with an example drive.

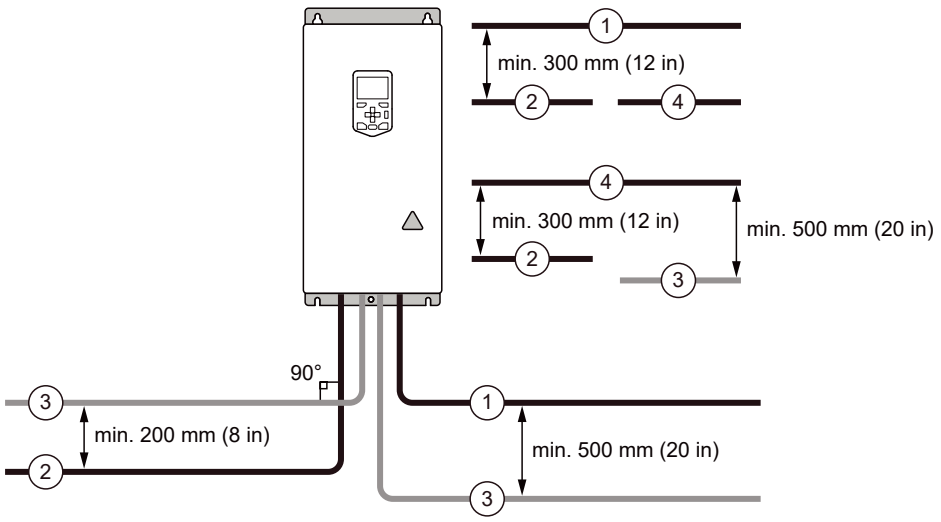

1	Motor cable
2	Input power cable
3	Control cable
4	Brake resistor or chopper cable (if any)

General guidelines – North America

Make sure that the installation is in accordance with national and local codes. Obey these general guidelines:

- Use separate conduits for the input power, motor, brake resistor (optional), and control cabling.
- Use separate conduit for each motor cabling.

The following figure illustrates the cable routing guidelines with an example drive.

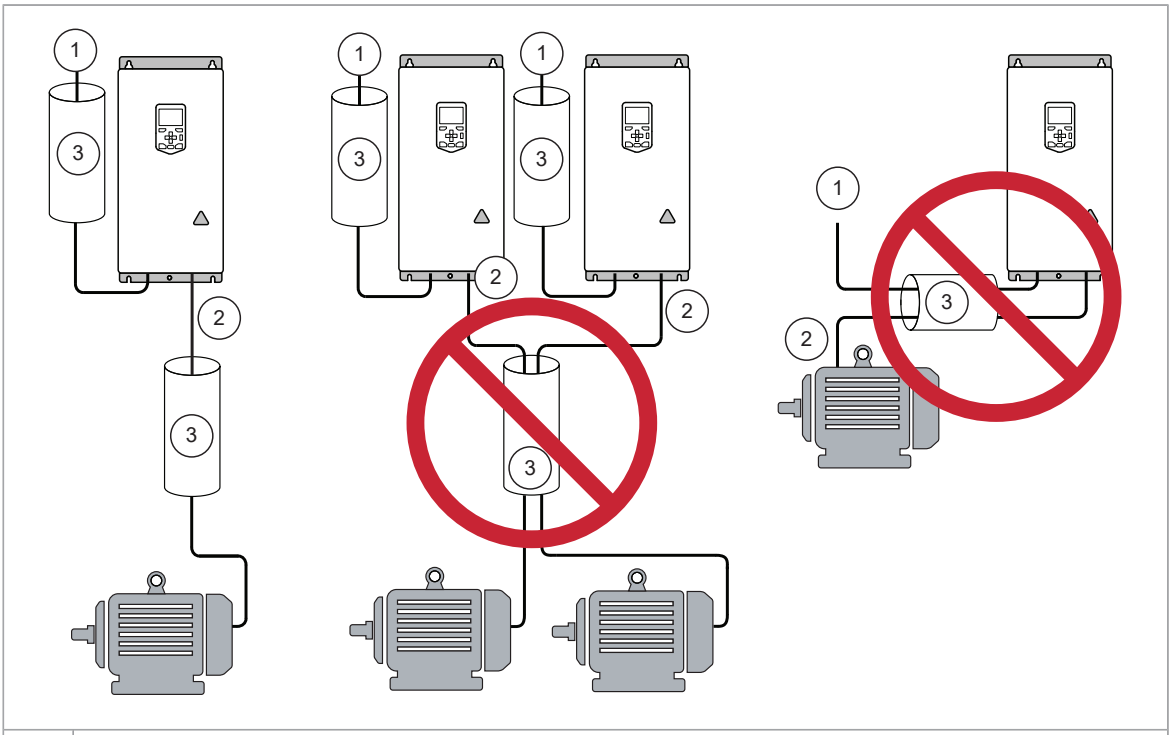

1	Input power cabling
2	Motor cabling
3	Conduit

Continuous motor cable shield/conduit and metal enclosure for equipment on the motor cable

To minimize the emission level when safety switches, contactors, connection boxes or similar equipment are installed on the motor cable between the drive and the motor:

- Install the equipment in a metal enclosure.
- Use either a symmetrical shielded cable, or install the cabling in a metal conduit.
- Make sure that there is a good and continuous galvanic connection in the shield/conduit between drive and motor.
- Connect the shield/conduit to the protective ground terminal of the drive and the motor.

Separate control cable ducts

Put 24 V DC and 230 V AC (120 V AC) control cables in separate ducts, unless the 24 V DC cable is insulated for 230 V AC (120 V AC) or insulated with an insulation sleeving for 230 V AC (120 V AC).

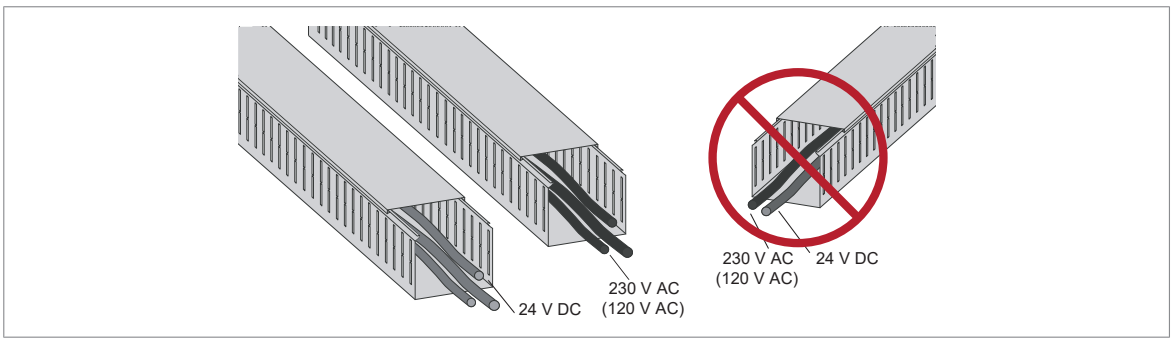

Protecting the drive, input power cable, motor and motor cable in short circuit situations and against thermal overload

Protecting the drive and the input power cable in short-circuits

Protect the drive (1) with fuses (a) and the input cable with fuses (b) or a circuit breaker.

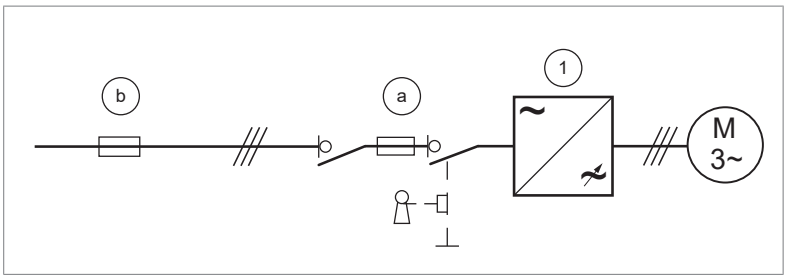

Select the fuses or the circuit breaker according to local regulations for the input cable protection. Select the fuses for the drive according to the instructions given in the technical data. The fuses for the drive protection will restrict drive damage and prevent damage to adjoining equipment in case of a short-circuit inside the drive.

The protective characteristics of circuit breakers depend on the type, construction and settings of the breakers. There are also limitations pertaining to the short-circuit capacity of the supply network. Your local ABB representative can help you in selecting the breaker type when the supply network characteristics are known.

Note: Circuit breakers must not be used without fuses.

⚠WARNING Due to the inherent operating principle and construction of circuit breakers, independent of the manufacturer, hot ionized gases can escape from the breaker enclosure in case of a short-circuit. To ensure safe use, pay special attention to the installation and placement of the breakers. Obey the manufacturer's instructions.

Protecting the motor and motor cable in short-circuits

The drive protects the motor cable and motor in a short-circuit situation when:

- the motor cable is sized correctly
- the motor cable type complies with the motor cable selection guidelines by ABB
- the cable length does not exceed the allowed maximum length specified for the drive
- the setting of parameter 99.10 Motor nominal power in the drive is equal with the value given on the motor rating plate.

The electronic power output short-circuit protection circuitry meets the requirements of IEC 60364-4-41:2005 + AMD1:2017.

Protecting the motor cables against thermal overload

The drive protects the motor cables against thermal overload when the cables are sized according to the nominal output current of the drive. No additional thermal protection devices are needed.

WARNING If the drive is connected to multiple motors, use a separate overload protection for each motor cable and motor. The drive overload protection is tuned for the total motor load. It may not detect an overload in one motor circuit only.

North America: The local code (NEC) requires an overload protection and a short-circuit protection for each motor circuit. Use, for example:

- manual motor protector
- circuit breaker, contactor and overload relay or
- fuses, contactor and overload relay.

Protecting the motor against thermal overload

According to regulations, the motor must be protected against thermal overload and the current must be switched off when overload is detected. The drive includes a motor thermal protection function that protects the motor and switches off the current when necessary. Depending on a drive parameter value, the function either monitors a calculated temperature value (based on a motor thermal model) or an actual temperature indication given by motor temperature sensors.

The motor thermal protection model supports thermal memory retention and speed sensitivity. The user can tune the thermal model further by feeding in additional motor and load data.

The most common temperature sensor types are PTC or Pt100.

For more information, see the firmware manual.

Protecting the motor against overload without thermal model or temperature sensors

Motor overload protection protects the motor against overload without using motor thermal model or temperature sensors.

Motor overload protection is required and specified by multiple standards including the US National Electric Code (NEC) and the common UL/IEC 61800-5-1 standard in conjunction with UL/IEC 60947-4-1. The standards allow for motor overload protection without external temperature sensors.

The protection feature of the drive allows the user to specify the class of operation in the same manner as the overload relays are specified in standards UL/IEC 60947-4-1 and NEMA ICS 2.

The motor overload protection supports thermal memory retention and speed sensitivity.

For more information, see drive firmware manual.

Protecting the drive against ground faults

The drive is equipped with an internal ground fault protective function to protect the unit against ground faults in the motor and motor cable. This function is not a personnel safety or a fire protection feature. See the firmware manual for more information.

Residual current device compatibility

The drive is suitable for use with residual current devices of Type B.

Note: As standard, the drive contains capacitors connected between the main circuit and the frame. These capacitors and long motor cables increase the ground leakage current and may cause nuisance faults in residual current devices.

Implementing a motor temperature sensor connection

WARNING IEC 61800-5-1 requires double or reinforced insulation between the live parts and accessible parts when:

- the accessible parts are not conductive, or
- the accessible parts are conductive, but not connected to the protective earth.

Obey this requirement when you plan the connection of the motor temperature sensor to the drive.

You have these implementation alternatives:

1. If there is double or reinforced insulation between the sensor and the live parts of the motor: You can connect the sensor directly to the analog/digital input(s) of the drive. See the control cable connection instructions. Make sure that the voltage is not more than the maximum allowed voltage over the sensor.
2. If there is basic insulation between the sensor and the live parts of the motor, or if the insulation type is not known: You can connect the sensor to the drive via an option module. The sensor and the module must form a double or reinforced insulation between the motor live parts and the drive control unit. Refer to Connecting a motor temperature sensor to the drive through an option module (page 72). Make sure that the voltage does not exceed the maximum allowed voltage over the sensor.
3. If there is basic insulation between the sensor and the live parts of the motor, or if the insulation type is not known: You can connect a sensor to a digital input of the drive via an external relay. The sensor and the relay must form a double or reinforced insulation between the motor's live parts and the digital input of the drive. Make sure that the voltage does not exceed the maximum allowed voltage over the sensor.

Connecting a motor temperature sensor to the drive through an option module

This table shows:

- option module types that you can use for the motor temperature sensor connection
- insulation or isolation level that each option module forms between its temperature sensor connector and other connectors
- temperature sensor types that you can connect to each option module
- temperature sensor insulation requirement in order to form, together with the insulation of the option module, a reinforced insulation between the motor live parts and the drive control unit.

Option module		Temperature sensor type			Temperature sensor insulation requirement
Type	**Insulation/Isolation**	**PTC**	**KTY**	**Pt100, Pt1000**	
FIO-11	Galvanic isolation between sensor connector and drive control unit connector. No isolation between sensor connector and other I/O connectors.	x	x	x	Reinforced insulation
FEN-01	Galvanic isolation between sensor connector and drive control unit connector. No isolation between sensor connector and TTL encoder emulation output.	x	-	-	Reinforced insulation
FEN-11	Galvanic isolation between sensor connector and drive control unit connector. No isolation between sensor connector and TTL encoder emulation output.	x	x	-	Reinforced insulation
FEN-21	Galvanic isolation between sensor connector and drive control unit connector. No isolation between sensor connector and TTL encoder emulation output.	x	x	-	Reinforced insulation
FEN-31	Galvanic isolation between sensor connector and drive control unit connector. No isolation between sensor connector and other connectors.	x	x	-	Reinforced insulation
FAIO-01	Basic insulation between sensor connector and drive control unit connector. No insulation between sensor connector and other I/O connectors.	x	x	x	Reinforced or basic insulation. With basic insulation, the other I/O connectors of the option module must be kept disconnected.
FPTC-01/02[1)]	Reinforced insulation between sensor connector and other connectors (including drive control unit connector).	x	-	-	No special requirement

[1)] Suitable for use in safety functions (SIL2 / PL c classified).

Implementing the emergency stop function

For safety reasons, install the emergency stop devices at each operator control station and at other operating stations where the emergency stop may be needed. Implement the emergency stop according to relevant standards.

Note: You can use the Safe torque off function of the drive to implement the Emergency stop function.

Implementing the Safe torque off function

See The Safe torque off function (page 169).

Implementing the functions provided by the FSO safety functions module

You can order the drive with an FSO-12 safety functions module or FSO-21 safety functions module. An FSO module enables the implementation of functions such as Safe brake control (SBC), Safe stop 1 (SS1), Safe stop emergency (SSE), Safely limited speed (SLS) and Safe maximum speed (SMS).

The settings of the FSO module have default values when delivered from the factory. The wiring of the external safety circuit and configuration of the FSO module are the responsibility of the user.

The FSO module reserves the standard Safe torque off (STO) connection of the drive (or inverter) control unit. STO can still be utilized by other safety circuits through the FSO module.

See the appropriate manual for more information.

Name	Code
FSO-12 safety functions module user's manual	3AXD50000015612
FSO-21 safety functions module user's manual	3AXD50000015614

Implementing the functions provided by the FSPS-21 PROFIsafe safety functions module

You can order the drive with an FSPS-21 PROFIsafe safety functions module, which provides PROFINET and PROFIsafe connection to the drive and has two safety functions integrated into it: Safe torque off (STO) and Safe stop 1, time monitored (SS1-t). With the module, it is possible to control the drive via PROFINET and safely stop the drive via PROFIsafe.

The Safe torque off function can be controlled with PROFIsafe. When using FSPS-21 PROFIsafe safety functions module, other safety functions are not available. Use of PROFIsafe and PROFINET is also possible by using FPNO-21 and FSO option modules.

The settings of the module have default values when delivered from the factory. The wiring and configuration of the FSPS-21 module are the responsibility of the user.

For more information, see FSPS-21 PROFIsafe safety functions module user's manual (3AXD50000158638 [English]).

Implementing the functions provided by the FSCS-21 CIP Safety™ functions module

You can order the drive with FSCS-21 CIP Safety™ functions module . The module has two safety functions integrated into it: Safe torque off (STO) and Safe stop 1, time monitored (SS1-t). With the module, you can connect a drive to an Ethernet network and a safety PLC. The module supports the CIP Safety™ communication technology through the EtherNet/IP communication protocol. The intended use of the FSCS module is to safely stop the drive when necessary. A safety PLC can activate the safety functions of the module.

The settings of the FSCS module have default values when delivered from the factory. The wiring and configuration of the FSCS module are the responsibility of the user.

The FSCS module reserves the standard Safe torque off (STO) connection of the drive (or inverter) control unit.

For more information, refer to FSCS-21 CIP Safety™ functions module user's manual (3AXD50001065478 [English]).

Using power factor compensation capacitors with the drive

Power factor compensation is not needed with AC drives. However, if a drive is to be connected in a system with compensation capacitors installed, note the following restrictions.

NOTICE Do not connect power factor compensation capacitors or harmonic filters to the motor cables (between the drive and the motor). They are not designed for use with AC drives and can cause permanent damage to the drive or themselves.

If there are power factor compensation capacitors in parallel with the input of the drive:

1. Do not connect a high-power capacitor to the power line while the drive is connected. The connection will cause voltage transients that can trip or cause damage to the drive.
2. If capacitor load is increased/decreased step by step when the AC drive is connected to the power line, make sure that the connection steps are low enough not to cause voltage transients that would trip the drive.
3. Make sure that the power factor compensation unit is suitable for use in systems with AC drives, ie, harmonic generating loads. In such systems, the compensation unit should typically be equipped with a blocking reactor or harmonic filter.

Using a safety switch between the drive and the motor

ABB recommends to install a safety switch between the permanent magnet motor and the drive output. The switch is needed to isolate the motor from the drive during maintenance work on the drive.

Implementing an ATEX-certified motor thermal protection

With option +Q971, the drive provides ATEX-certified safe motor disconnection without contactor using the drive Safe torque off function. To implement the thermal protection of a motor in explosive atmosphere (Ex motor), you must also:

- use an ATEX-certified Ex motor
- order an ATEX-certified thermistor protection module for the drive (option +L537), or acquire and install an ATEX-compliant protection relay
- do the necessary connections.

For more information, see:

User's manual	Manual code (English)
ATEX-certified Safe disconnection function, Ex II (2) GD for ACS880 drives (+Q971) application guide	3AUA0000132231

User's manual	Manual code (English)
FPTC-02 ATEX-certified thermistor protection module, Ex II (2) GD (option +L537+Q971) for ACS880 drives user's manual	3AXD50000027782
FPTC-02 ATEX-certified thermistor protection module, instructions for pairing the module with a drive with the ATEX-certified disconnection function (option +Q971)	3AXD50001096700

Implementing the power loss ride-through function

If the incoming supply voltage is cut off, the drive will continue to operate by utilizing the kinetic energy of the rotating motor. The drive will be fully operational as long as the motor rotates and generates energy to the drive.

If you equip the drive with a main contactor or breaker, make sure that it restores the drive input power after a short break. The contactor must either re-connect after the break automatically, or remain closed over the break. Depending on the contactor control circuit design, this can require an additional hold circuit, uninterruptible auxiliary power supply or auxiliary power supply buffering.

Note: If the power loss lasts so long that the drive trips on undervoltage, a fault reset and a fresh start command is required to continue operation.

Implement the power-loss ride-through function as follows:

1. Enable the power-loss ride-through function of the drive (parameter 30.31).
2. If the installation is equipped with a main contactor, prevent its tripping at the input power break. For example, use a time delay relay (hold) in the contactor control circuit.
3. Enable the automatic restart of the motor after a short power supply break:
   - Set the start mode to automatic (parameter 21.01 or 21.19, depending on the motor control mode being used).
   - Define the automatic restart time (parameter 21.18).

WARNING Make sure that a flying restart of the motor will not cause any danger. If you are in doubt, do not implement the power loss ride-through function.

Controlling a contactor between drive and motor

The control of the output contactor depends on how you use the drive, that is, which motor control mode and which motor stop mode you select.

If you have the DTC motor control mode and the motor ramp stop mode selected, use this operation sequence to open the contactor:

1. Give a stop command to the drive.
2. Wait until the drive decelerates the motor to zero speed.
3. Open the contactor.

If you have the DTC motor control mode and the motor coast stop, or scalar control mode selected, open the contactor as follows:

1. Give a stop command to the drive.
2. Open the contactor.

WARNING When the DTC motor control mode is in use, never open the output contactor while the drive controls the motor. The DTC motor control operates extremely fast, much faster than it takes for the contactor to open its contacts. When the contactor starts opening while the drive controls the motor, the DTC control will try to maintain the load current by immediately increasing the drive output voltage to the maximum. This will damage, or even burn, the contactor completely.

Implementing a bypass connection

If bypassing is required, use mechanically or electrically interlocked contactors between the motor and the drive and between the motor and the power line. Make sure with interlocking that the contactors cannot be closed simultaneously. The installation must be clearly marked as defined in IEC/EN/UL 61800-5-1, subclause 6.5.3, for example, “THIS MACHINE STARTS AUTOMATICALLY”.

NOTICE Do not connect the drive output to the electrical power network. The connection can cause damage to the drive.

Example bypass connection

An example bypass connection is shown below.

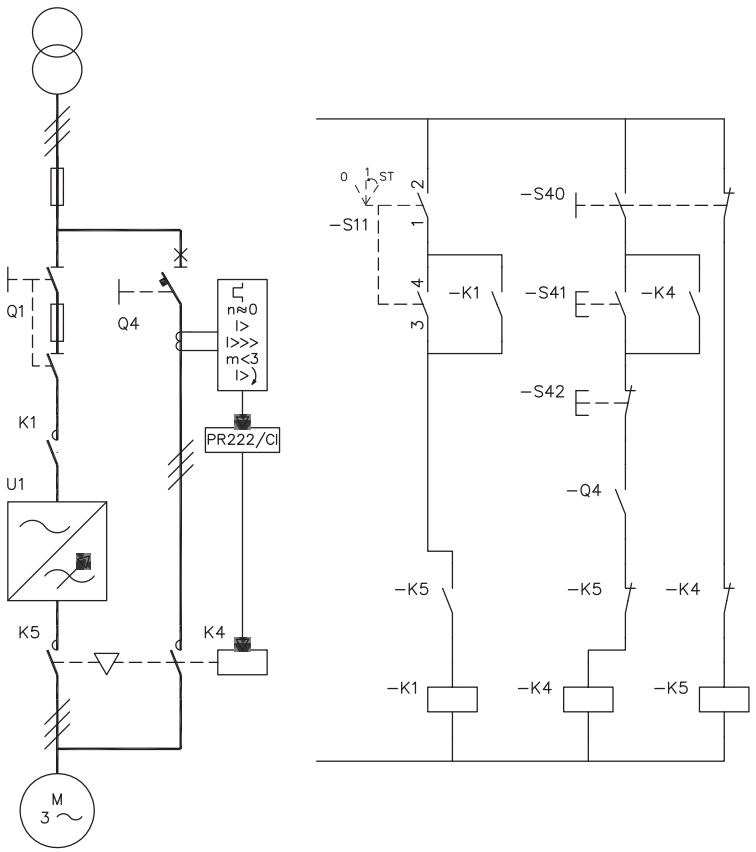

Q1	Drive main switch
Q4	Bypass circuit breaker
K1	Drive main contactor
K4	Bypass contactor
K5	Drive output contactor
S11	Drive main contactor on/off control
S40	Motor power supply selection (drive or direct-on-line)
S41	Start when motor is connected direct-on-line
S42	Stop when motor is connected direct-on-line

Switching the motor power supply from drive to direct-on-line

1. Stop the drive and the motor with the drive control panel stop key (drive in the local control mode) or the external stop signal (drive in the remote control mode).
2. Open the main contactor of the drive with S11.
3. Switch the motor power supply from the drive to direct-on-line with S40.
4. Wait for 10 seconds to allow the motor magnetization to dissipate.
5. Start the motor with S41.

Switching the motor power supply from direct-on-line to drive

1. Stop the motor with S42.
2. Switch the motor power supply from direct-on-line to the drive with S40.
3. Close the main contactor of the drive with switch S11 (-> turn to position ST for two seconds and leave to position 1).
4. Start the drive and the motor with the drive control panel start key (drive in the local control mode) or the external start signal (drive in remote control mode).

Protecting the contacts of relay outputs

Inductive loads (relays, contactors, motors) cause voltage transients when switched off.

The relay contacts on the drive control unit are protected with varistors (250 V) against overvoltage peaks. In spite of this, it is highly recommended that inductive loads are equipped with noise attenuating circuits (varistors, RC filters [AC] or diodes [DC]) to minimize the EMC emission at switch-off. If not suppressed, the disturbances may connect capacitively or inductively to other conductors in the control cable and form a risk of malfunction in other parts of the system.

Install the protective component as close to the inductive load as possible. Do not install protective components at the relay outputs.

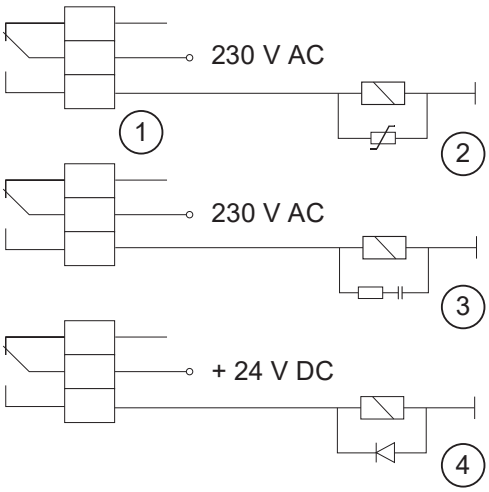

1	Relay output
2	Varistor
3	RC filter
4	Diode

7

Electrical installation

Contents of this chapter

This chapter gives instructions on the wiring of the drive.

Safety

WARNING Obey the safety instructions of the drive. If you ignore them, injury or death, or damage to the equipment can occur. If you are not a qualified electrical professional, do not do installation, commissioning, or maintenance work.

Grounding the motor cable shield at the motor end

For minimum radio-frequency interference, ground the cable shield 360° at the cable entry of the motor terminal box.

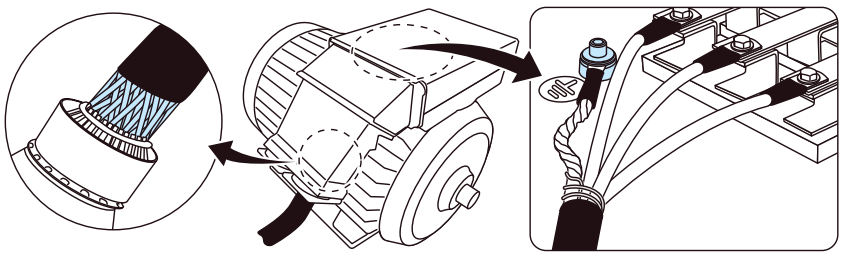

Measuring the insulation

Measuring the insulation resistance of the drive

NOTICE Do not do voltage withstand or insulation resistance tests on the drive. The tests can cause damage to the drive. Every drive is tested for insulation between the main circuit and the chassis at the factory. Also, there are voltage-limiting circuits inside the drive which cut down the testing voltage automatically.

Measuring the insulation resistance of the input power cable

Before you connect the input power cable to the drive, measure its insulation resistance according to local regulations.

Measuring the insulation resistance of the motor and motor cable

⚠WARNING Obey the safety instructions of the drive. If you ignore them, injury or death, or damage to the equipment can occur. If you are not a qualified electrical professional, do not do installation, commissioning, or maintenance work.

1. Do the steps in section Electrical safety precautions (page 16) before you start the work.
2. Make sure that the motor cable is disconnected from the drive output terminals.
3. Measure the insulation resistance between each phase conductor and the protective earth conductor. Use a measuring voltage of 1000 V DC. The insulation resistance of an ABB motor must be more than 100 Mohm (reference value at 25 °C [77 °F]). For the insulation resistance of other motors, refer to the manufacturer's instructions.

   Note: Moisture inside the motor reduces the insulation resistance. If you think that there is moisture in the motor, dry the motor and do the measurement again.

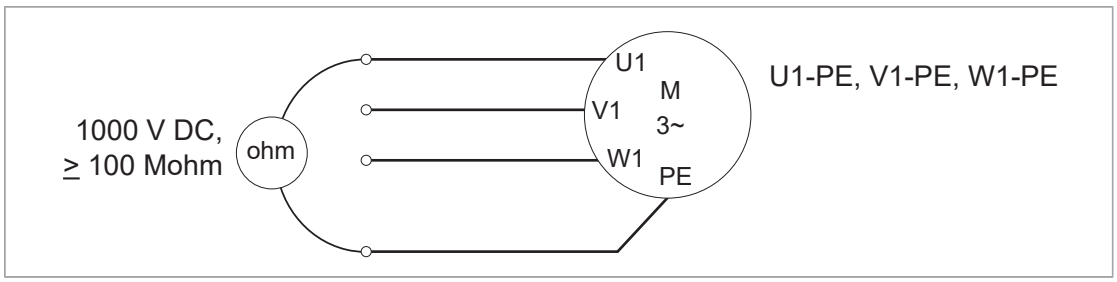

Measuring the insulation resistance of the brake resistor circuit

⚠WARNING Obey the safety instructions of the drive. If you ignore them, injury or death, or damage to the equipment can occur. If you are not a qualified electrical professional, do not do electrical installation, commissioning or maintenance work.

1. Stop the drive and do the steps in section Electrical safety precautions (page 16) before you start the work.
2. Make sure that the resistor cable is connected to the resistor and disconnected from the drive output terminals.
3. At the drive end, connect the R+ and R- conductors of the resistor cable together. Measure the insulation resistance between the conductors and the PE conductor with a measuring voltage of 1000 V DC. The insulation resistance must be more than 1 Mohm.

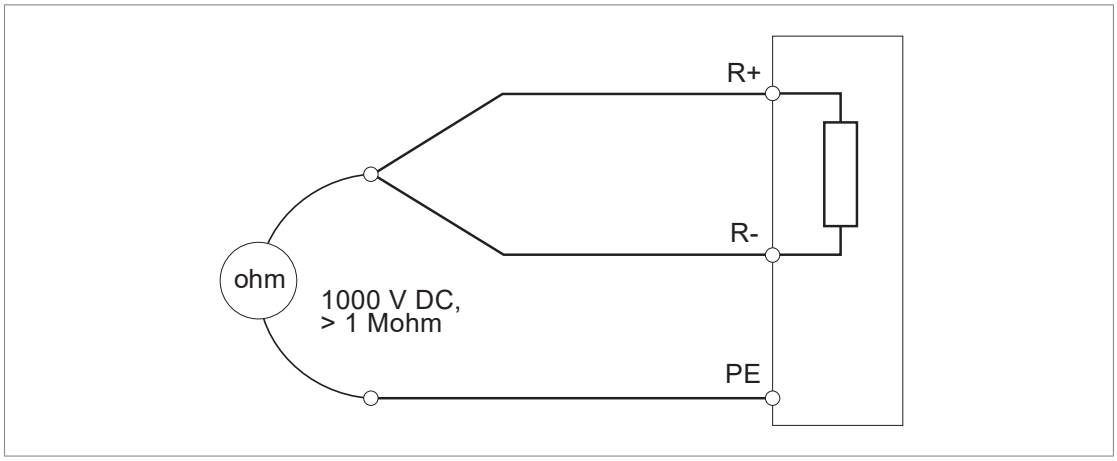

Grounding system compatibility check

The standard drive with no EMC filter and the ground-to-phase varistor connected can be installed to a symmetrically grounded TN-S system. If you install the drive to another system, you may need to disconnect the EMC filter and ground-to-phase varistor. Refer to ACS880 frames R1 to R11 EMC filter and ground-to-phase varistor disconnecting instructions (3AUA0000125152 [English])

CAUTION Do not install the drive with EMC filter option +E200 to a system that the filter is not suitable for. This can cause danger, or damage the drive.

NOTICE Do not install the drive with the ground-to-phase varistor connected to a system that the varistor is not suitable for. It can cause damage to the varistor circuit.

Corner-grounded and midpoint-grounded 525…690 V delta systems

NOTICE Do not install the drive on a 525…690 V corner-grounded or midpoint-grounded delta system. Disconnecting the EMC filter and ground-to-phase varistor does not prevent damage to the drive.

Grounding the drive module

Ground the drive module from its top back grounding hole to the cabinet frame or from the module PE terminal to the cabinet PE busbar.

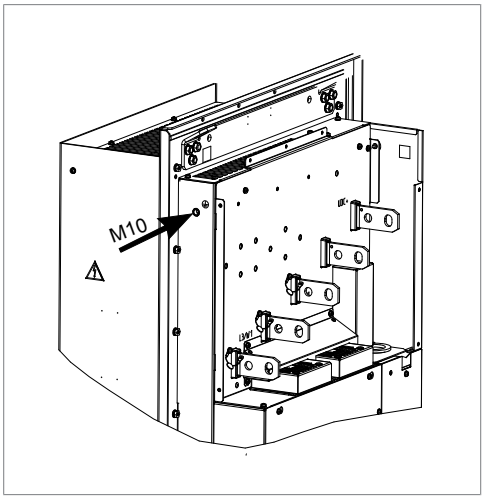

Connecting the power cables

WARNING Obey the safety instructions of the drive. If you ignore them, injury or death, or damage to the equipment can occur.

Power cable connection diagram

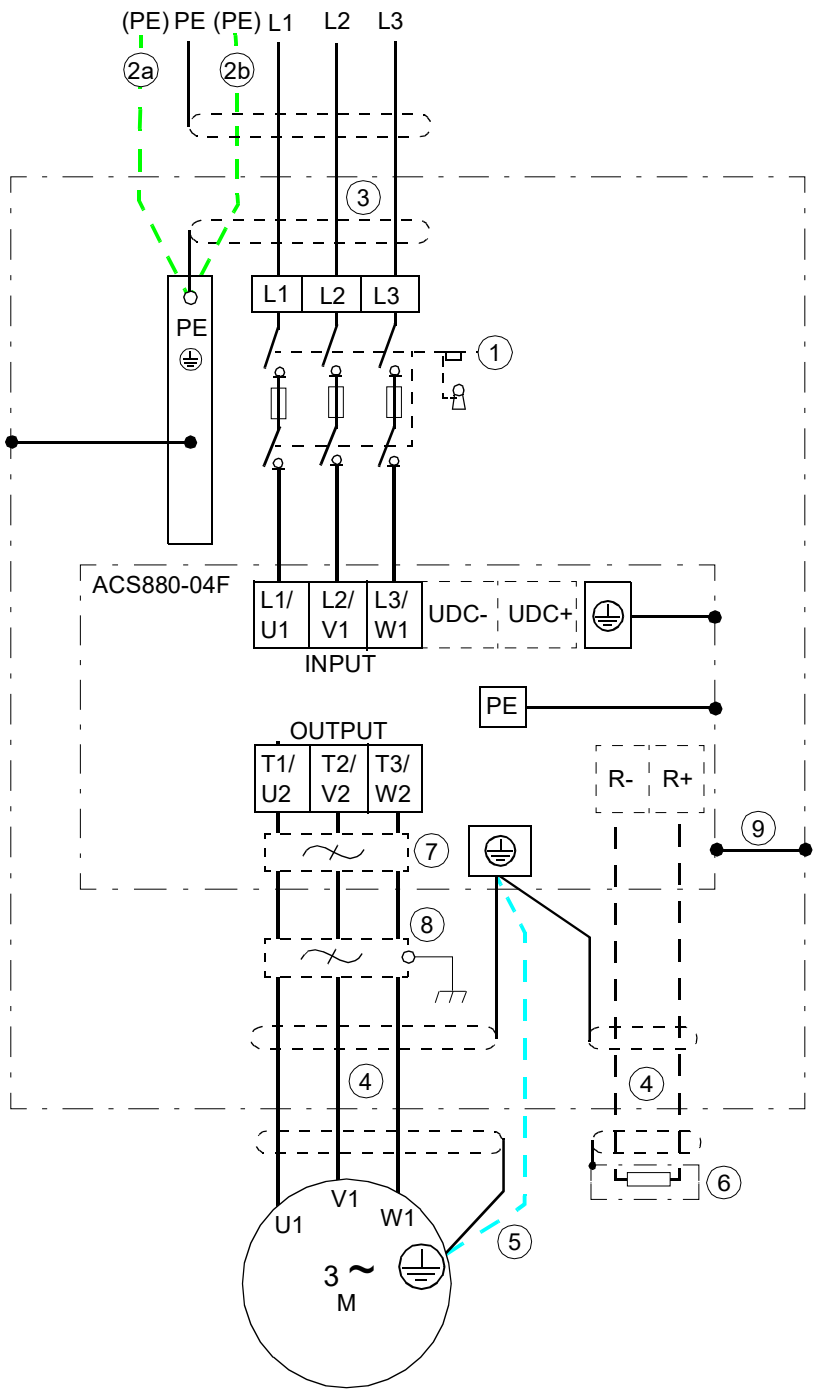

1	Disconnecting device, see Selecting the main supply disconnecting device (page 53)
2	If a shielded cable is used (not required but recommended) and the conductivity of the shield is < 50% of the conductivity of the phase conductor, use a separate PE cable (2a) or a cable with a grounding conductor (2b)
3	ABB recommends 360° grounding at the cabinet entry if a shielded cable is used. Ground the other end of the input cable shield or PE conductor at the distribution board.
4	ABB recommends 360° grounding at the cabinet entry, see Selecting the power cables (page 61)

5	Use a separate grounding cable if the conductivity of the cable shield is < 50% of the conductivity of the phase conductor and there is no symmetrically constructed grounding conductor in the cable, see Power cable types (page 62)
6	External brake resistor (optional, see Resistor braking (page 187))
7	Common mode filter (optional), see Requirements tables (page 55)
8	d*u*/d*t* filter (optional), see d*u*/d*t* filters (page 195)
9	The drive module frame must be connected to the cabinet frame, see Grounding the drive module (page 83)
If there is a symmetrically constructed grounding conductor in the motor cable in addition to the conductive shield, connect the grounding conductor to the grounding terminal at the drive and motor ends. Do not use an asymmetrically constructed motor cable. Connecting its fourth conductor at the motor end increases bearing currents and causes extra wear.	

Preparing the cable ends and making 360° grounding at the cable entry

WARNING Obey the safety instructions of the drive. If you ignore them, injury or death, or damage to the equipment can occur. If you are not a qualified electrical professional, do not do electrical installation, commissioning or maintenance work.

1. Do the steps in section Electrical safety precautions (page 16) before you start the work.
2. Peel off 3…5 cm (1 1/4 … 2 in) of the outer insulation of the cables at the cable entries with the conductive sleeves for the 360° high-frequency grounding.

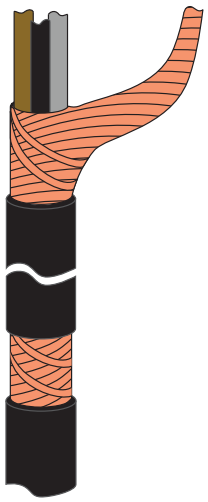

3. Prepare the ends of the cables.

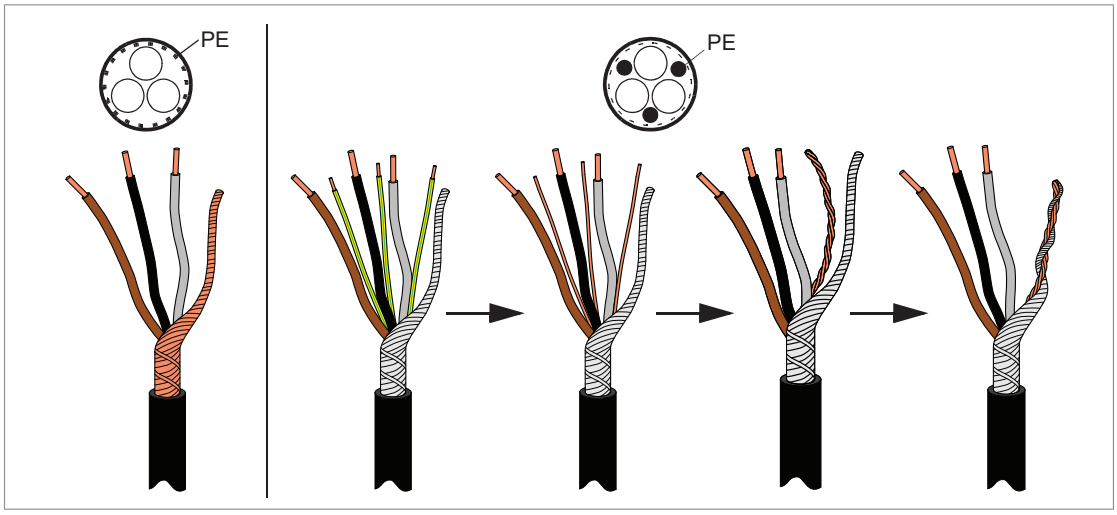

4. Put the cables through the entry plate. If the entry holes have rubber grommets, use one grommet for each cable. Cut adequate hole into the grommet and put the cable through the grommet inside the cabinet.
5. Attach the conductive sleeves to the cable shields with cable ties. Tie up the unused conductive sleeves with cable ties. An example of bottom entry is shown below. For top entry, put the grommet upwards.

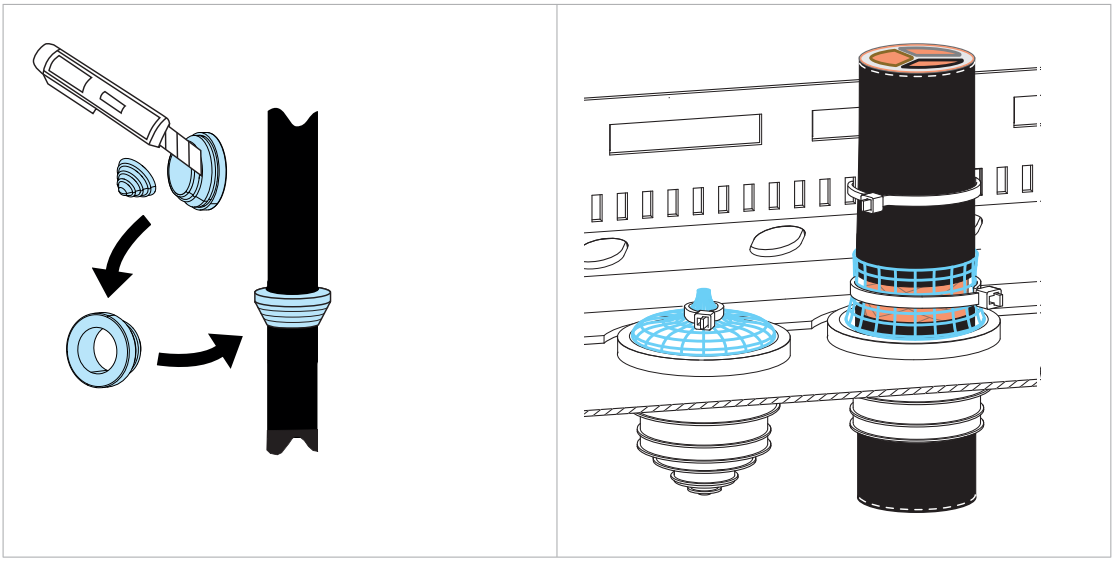

Power cable connection procedure

⚠WARNING Obey the safety instructions of the drive. If you ignore them, injury or death, or damage to the equipment can occur. If you are not a qualified electrical professional, do not do electrical installation, commissioning or maintenance work.

For the standard drive module configuration:

- See the step-by-step installation drawings in ACS880-04F quick installation guide (3AXD50000044913 [multilingual]).

For optional input power cable connection terminals and ground busbar assembly (+H370):

- Install the metallic shroud with ground bar as shown in section Attaching the metallic shroud (standard) (page 50)
- Connect the full-size input power cable connection terminals in a similar way as the motor cable connection terminals, see ACS880-04F quick installation guide (3AXD50000044913 [multilingual]).

For drive modules without full-size output cable connection terminals (option +0H371) and IP20 shrouds (option +0B051):

- Connect the power cables directly to the drive module input and output terminals with cable lugs or by busbars.
- Protect the power cable terminals and electrical parts against contact and ground the drive module correctly.

1. Do the steps in section Electrical safety precautions (page 16) before you start the work.
2. Connect the cable shields of the motor cables and any separate ground conductors or cables to the ground terminal of the drive module or to the cabinet ground bar.
3. Connect the phase conductors of the motor cables to terminals T1/U2, T2/V2 and T3/W2 of the drive module. For the tightening torques, see the technical data.
4. Drive modules with option +D150: Connect the brake resistor conductors to the R+ and R- terminals. For the tightening torques, see the technical data.
5. Connect the cable shields of the input cables and any separate ground conductors or cables to the drive module ground terminal or to the cabinet PE busbar.
6. Connect the phase conductors of the input cables to terminals L1/U1, L2/V1 and L3/W1 of the drive module. For the tightening torques, see the technical data.

DC connection

The UDC+ and UDC– terminals are intended for common DC configurations of a number of drives, allowing regenerative energy from one drive to be utilized by the other drives in the motoring mode. See ACS880-01 drives and ACS880-04 drive modules common DC systems application guide (3AUA0000127818 [English]).

Removing the control panel holder from the external control unit

1. Disconnect the control panel cable from connector X13 on the control unit.
2. Loosen the mounting screws of the control panel holder and take the holder off.

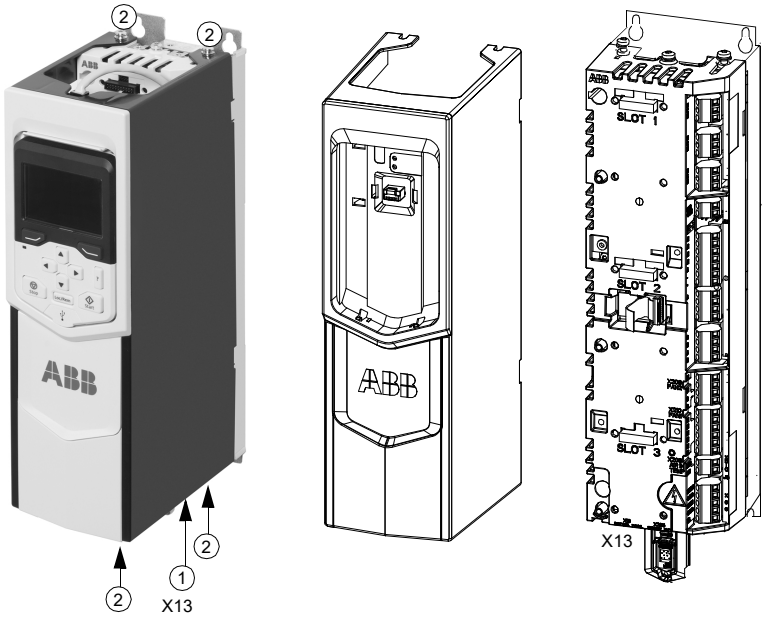

Attaching the control cable clamp plate

Attach the control cable clamp plate either to the top or base of the control unit with four screws as shown below.

Note: If you install the FSO-xx safety functions module above the control unit, attach the control cable clamp plate on the base of the control unit.

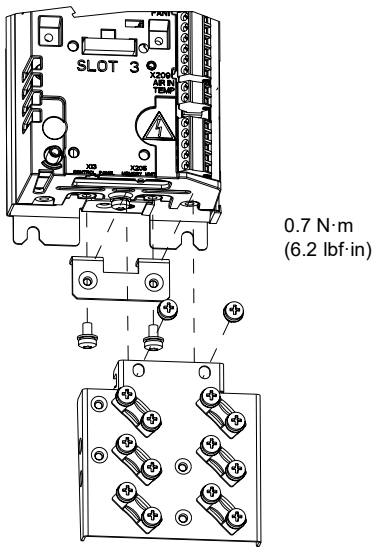

Connecting the external control unit to the drive module

Control unit connection cables

The cables that are delivered with the drive module for connecting the drive module and control panel to the control unit are shown below.

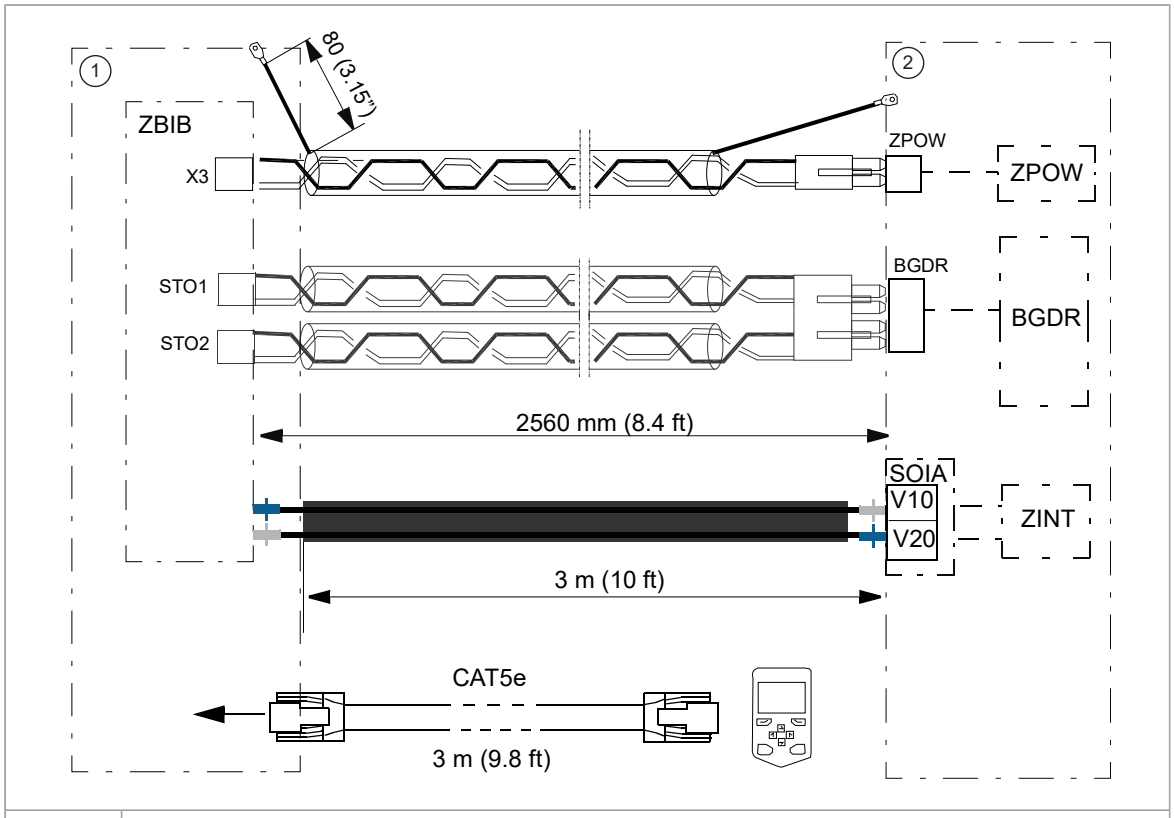

1	ZCU control unit
2	Drive module

NOTICE Obey these instructions. If you ignore them, equipment malfunction and damage to the fiber-optic cables can occur.

- Handle the fiber-optic cables with care.
- When you disconnect the cables, always hold the connector, not the cable itself.
- Do not touch the ends of the optical fibers with bare hands, because the ends are very sensitive to dirt.
- Do not bend the fiber-optic cables too tightly. The minimum permitted bend radius is 35 mm (1.4 in).

Routing the control unit cables into the drive module

Route the control unit connection cables to the drive module through the slot in the middle front cover at the front or left side. First, remove the plate which covers the slot. Then, install the rubber grommet (item 2) from the accessories box.

Connections to the drive module

1. Connect power supply cable of the control unit to the ZPOW connector and the ground wire of the cable to the ground terminal.
2. Connect the BGDR cable to the BGDR connector.
3. Connect the fiber optic cables to the V20 and V10 connectors.

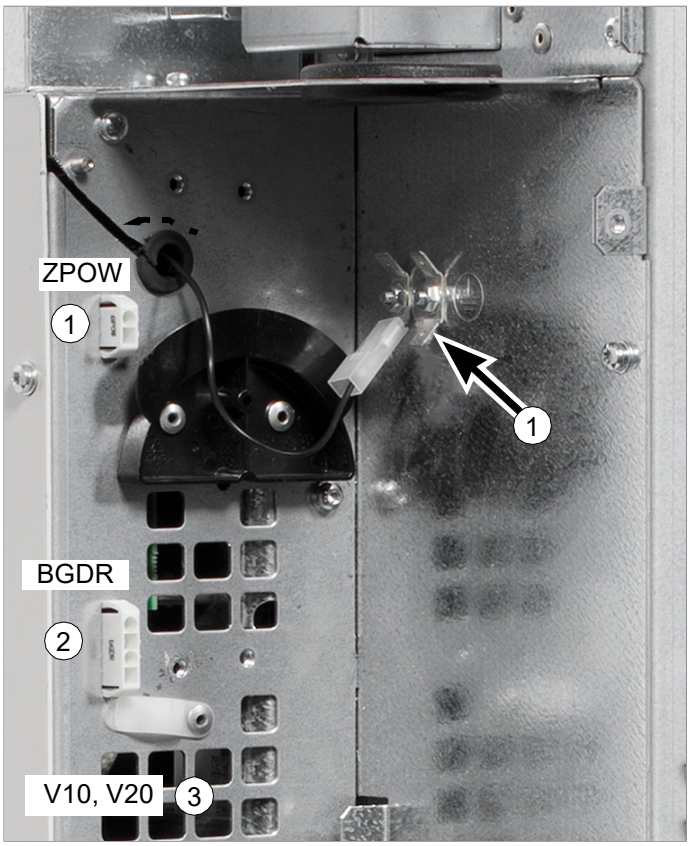

Connections to the control unit

Connect the fiber optic, power supply and BGDR cables to the control unit as follows:

1. Thread the cables inside the back frame of the control unit.
2. Connect the cables to the ZBIB board terminals.

ZPOW	ZBIB
X3:1	X3:1
X3:2	X3:2
X3:3 (not used)	X3:3 (not used)
BGDR	**ZBIB**
X7 (STO1)	X7 (STO1)
X8 (STO2)	X8 (STO2)

SOIA	ZBIB
V10	V1
V20	V2

3. Connect the ZPOW cable grounding wire to the grounding terminal at the back top or bottom of the control unit.

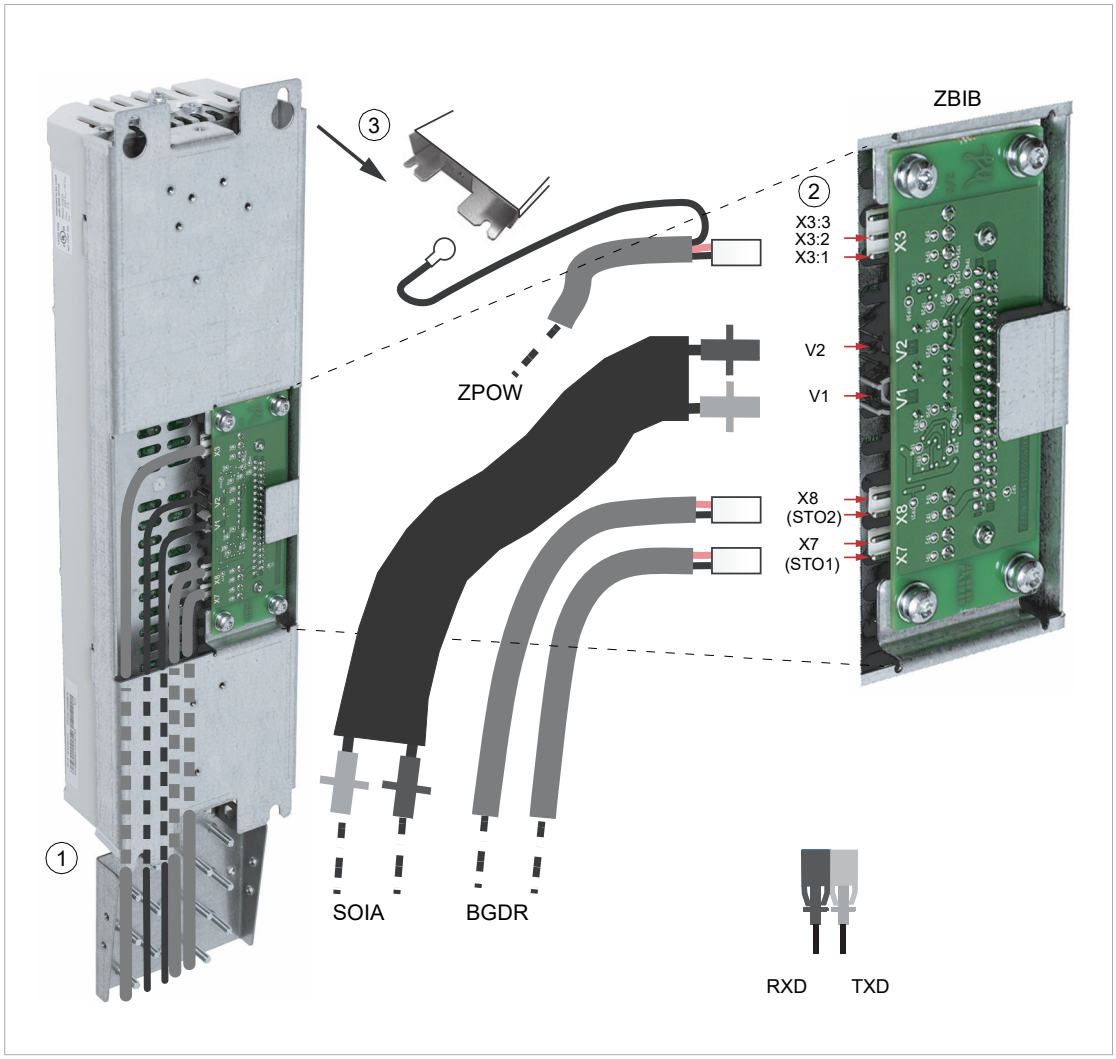

RXD = receiver TXD = transmitter

Connecting the control cables to the terminals of the external control unit

1. Route the cables to the control unit as shown below.

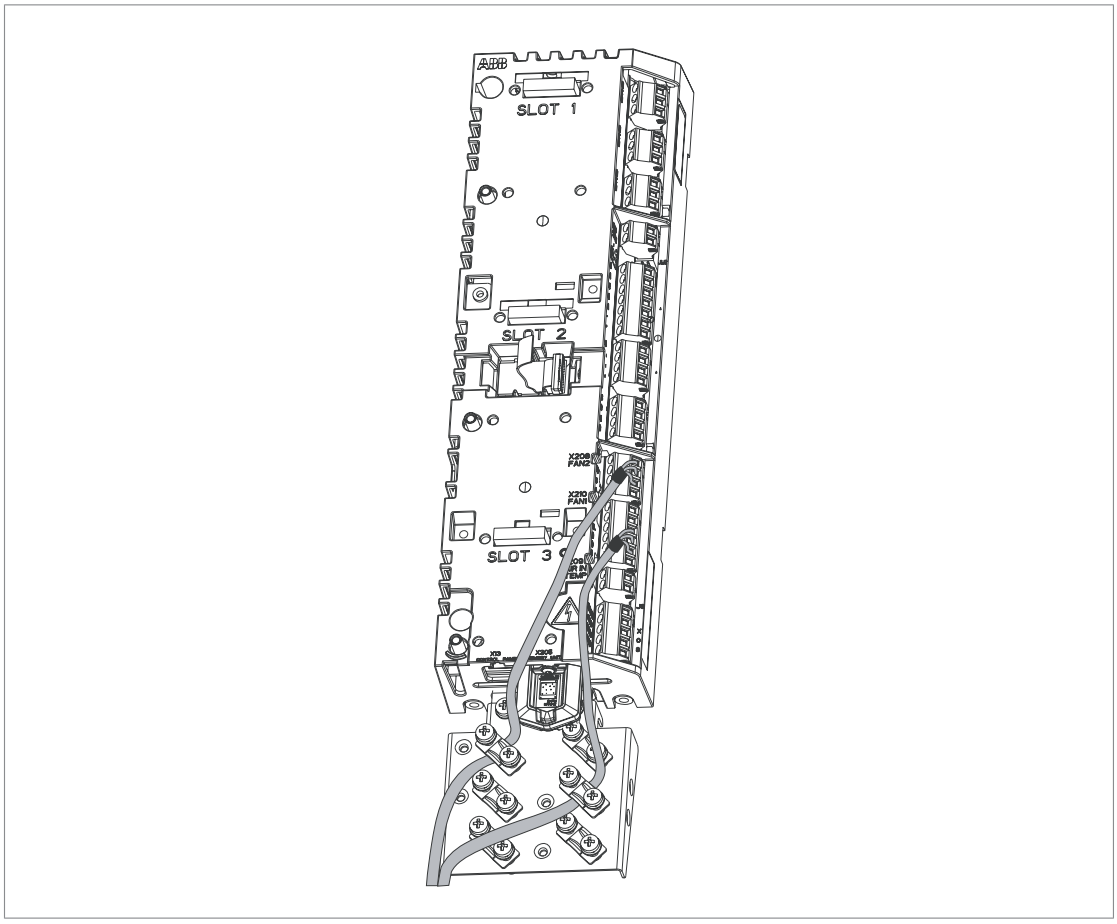

2. Ground the shields of the control cables at the clamp plate. Use torque 1.5 N·m (13 lbf·in). The shields should be continuous as close to the terminals of the control unit as possible. Only remove the outer jacket of the cable at the cable clamp so that the clamp presses on the bare shield. The shield (especially in case of multiple shields) can also be terminated with a lug and fastened with a screw at the clamp plate. Leave the other end of the shield unconnected or ground it indirectly via a few nanofarads high-frequency capacitor eg, 3.3 nF / 630 V. The shield can also be grounded directly at both ends if they are in the same ground line with no significant voltage drop between the end points. Tighten the screws to secure the connection.
3. Connect the conductors to the appropriate detachable terminals of the control unit. See the Default control connection diagram of the drive control unit (ZCU) (page 101). Use shrink tubing or insulating tape to contain any strain strands.

   Note: Keep any signal wire pairs twisted as close to the terminals as possible. Twisting the wire with its return wire reduces disturbances caused by inductive coupling. Keep the shields continuous as close to the terminals of the control unit as possible.

Installing the control panel holder back onto the external control unit

Install the control panel holder back onto the control unit in reverse order to removing it, see Removing the control panel holder from the external control unit (page 88).

Connecting a control panel

Connect the control panel as follows:

1. Connect an Ethernet cable to the RJ-45 connector of the control panel.
2. Connect the other end of the cable to the X13 connector of the control unit.

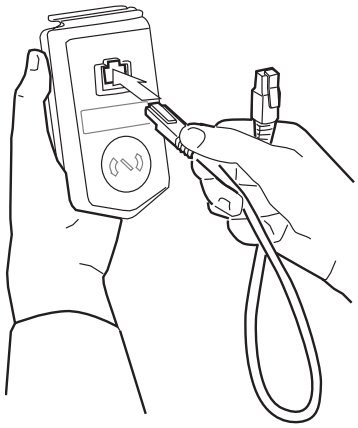

Note: When a PC is connected to the control panel, the control panel keypad is disabled. In this case, the control panel acts as a USB-RS485 adapter.

Panel bus (control of several units from one control panel)

One control panel (or PC) can be used to control several drives (or inverter units, supply units etc.) by constructing a panel bus. This is done by daisy-chaining the panel connections of the drives. Some drives have the necessary (twin) panel connectors in the control panel holder; those that do not require the installation of an FDPI-02 module (available separately). For further information, see the hardware description and FDPI-02 diagnostics and panel interface user's manual (3AUA0000113618 [English]).

The maximum allowed length of the cable chain is 100 m (328 ft).

Do the steps in section Electrical safety precautions (page 16) before you start the work.

1. Connect the panel to one drive using an Ethernet (for example Cat 5e) cable.
   - Use Menu - Settings - Edit texts - Drive to give a descriptive name to the drive
   - Use parameter 49.01* to assign the drive with a unique node ID number
   - Set other parameters in group 49* if necessary
   - Use parameter 49.06* to validate any changes.

   *The parameter group is 149 with supply (line-side), brake or DC/DC converter units.

   Repeat the above for each drive.
2. With the panel connected to one unit, link the units using Ethernet cables.
3. Switch on the bus termination on the drive that is farthest from the control panel in the chain.
   - With drives that have the panel mounted on the front cover, move the terminating switch into the outer position.
   - With the FDPI-02 module: move termination switch S1 on the FDPI-02 module into the TERMINATED position.

Make sure that bus termination is off on all other drives.

4. On the control panel, switch on the panel bus functionality (Options - Select drive - Panel bus). The drive to be controlled can now be selected from the list under Options - Select drive.

If a PC is connected to the control panel, the drives on the panel bus are automatically displayed in the Drive Composer PC tool.

With twin connectors in the control panel holder:

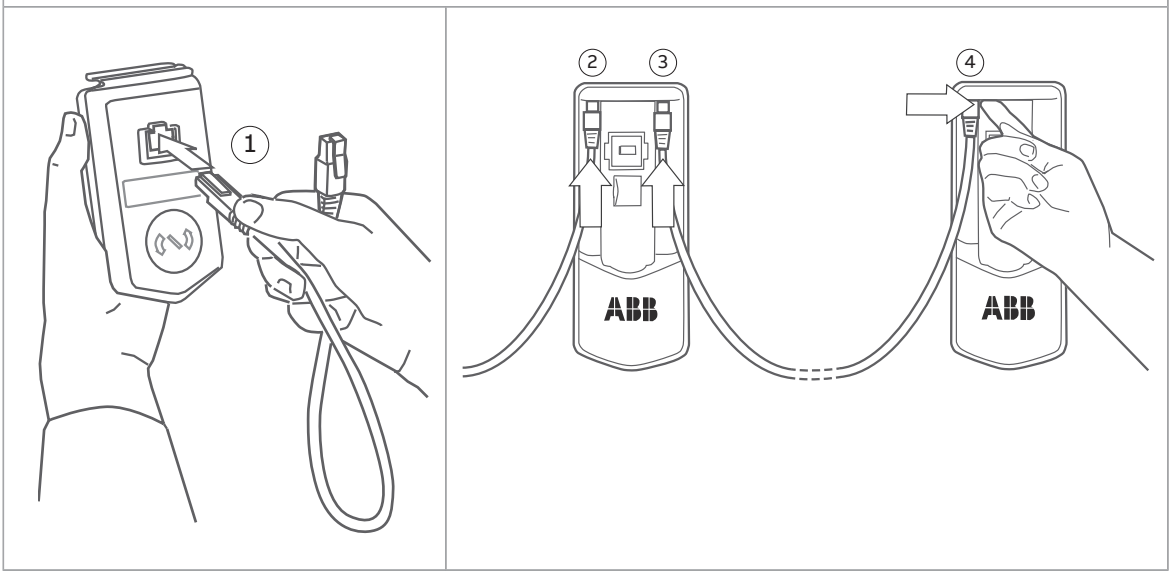

With FDPI-02 modules:

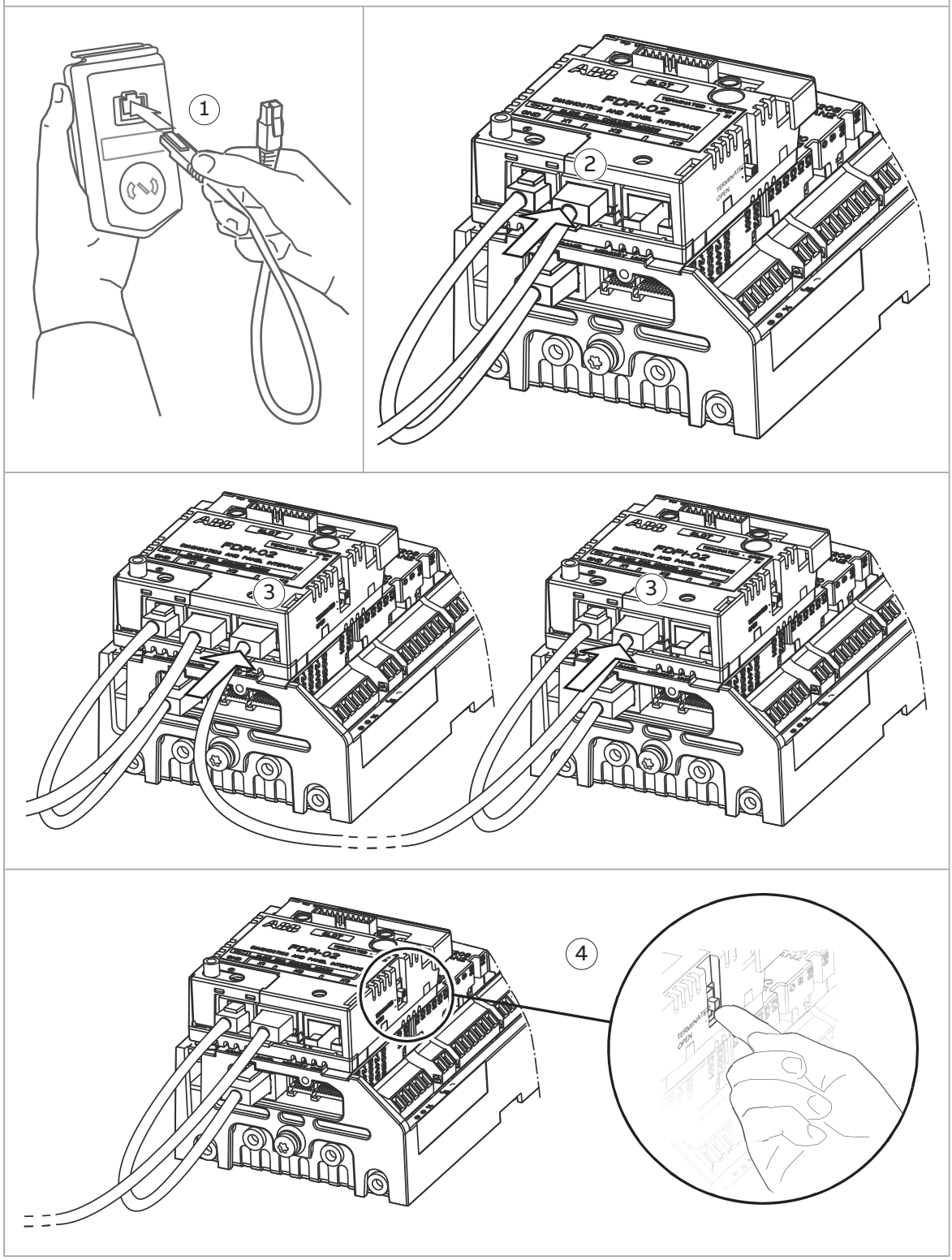

Connecting a PC

NOTICE Do not connect a PC directly to the control panel connector of the control unit. It can cause damage.

To connect a control panel to a PC (with, for example, Drive Composer PC tool):

1. Put the control panel into the panel holder or platform.
2. Remove the USB connector cover on the front of the control panel.
3. Connect an USB cable (Type A to Type Mini-B) between the USB connector on the control panel (3a) and a free USB port on the PC (3b).
4. The panel will display an indication whenever the connection is active.
5. Refer to the documentation of the PC tool for setup instructions.

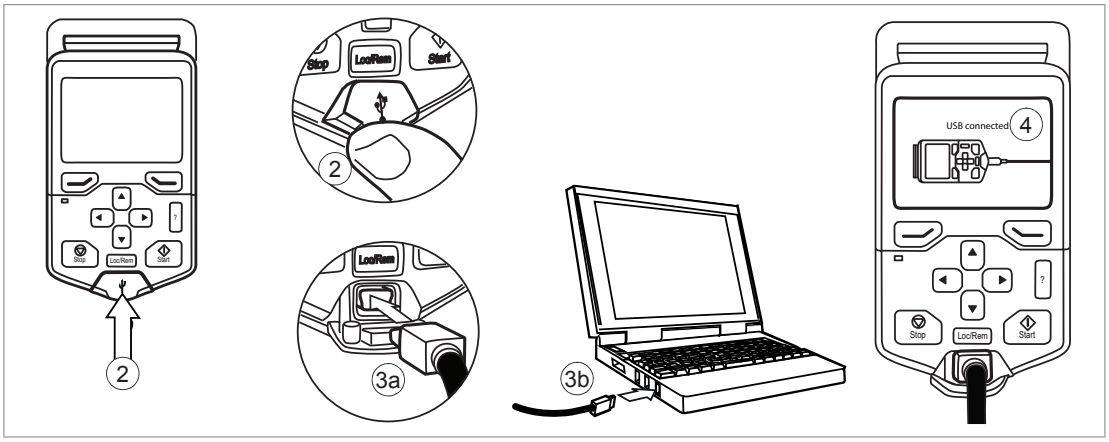

Alternatively, you can connect an Ethernet networking cable (eg. Cat 5e) to the Ethernet port behind the control panel. Make sure that the control panel is placed on a platform or a DIN rail.

Installing option modules

Note: The instructions in this section are applicable to drives with ZCU control unit. For UCU-20 control unit related instructions, refer to UCU-20 control unit hardware manual (3AXD50001079246 [English]).

Note: Slot 3 of the control unit supports only small F-type option modules. These are +Kxxx, +L503, +L508, +Q986 and +Q989.

⚠WARNING Obey the safety instructions of the drive. If you ignore them, injury or death, or damage to the equipment can occur. If you are not a qualified electrical professional, do not do electrical installation, commissioning or maintenance work.

NOTICE Use an antistatic wrist strap when you handle printed circuit boards. Do not touch the boards unnecessarily. The boards are sensitive to electrostatic discharge.

Pay attention to the free space required by the cabling or terminals coming to the option modules.

1. Stop the drive and do the steps in section Electrical safety precautions (page 16) before you start the work.
2. Pull out the lock (a) with a screwdriver.

   Note: The location of the lock depends on the module type.

3. Install the module to a free option module slot on the control unit.
4. Push in the lock (a).
5. Tighten the grounding screw (b) to a torque of 0.8 N·m (7 lbf·in).

   Note: The screw tightens the connections and grounds the module. It is essential for fulfilling the EMC requirements and for proper operation of the module.

   NOTICE Do not tighten the screw too much or too little. If you tighten the screw too much, damage to the threads or to the module can occur. A loose screw can cause a malfunction.

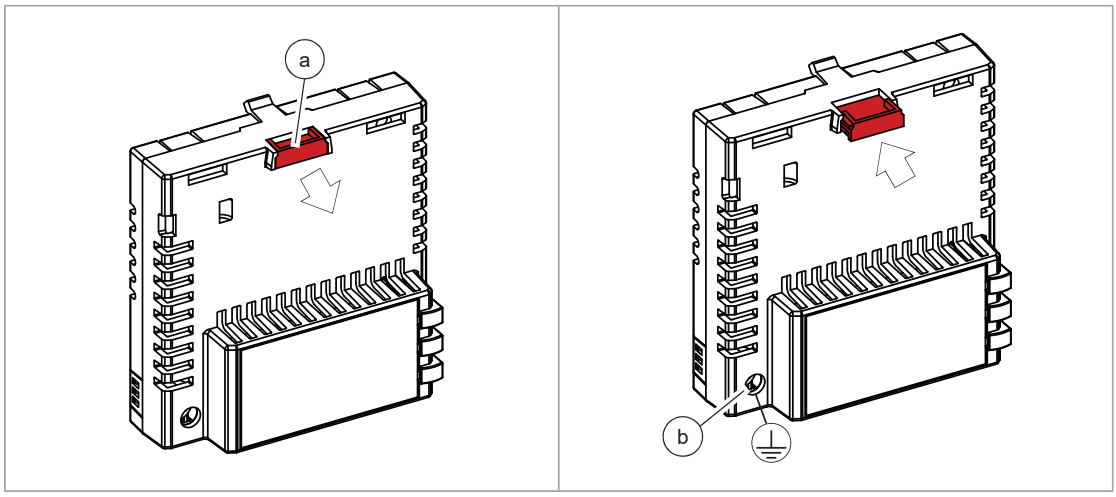

6. Connect the wiring to the module. Obey the instructions given in the documentation of the module.

If you must remove the option module after it is installed into the drive, use a suitable tool (for example, small pliers) to carefully pull out the lock.

8

Control unit

Contents of this chapter

This chapter

- gives information on the connections of the control unit, and
- has the specifications of the inputs and outputs of the control unit.

General

The drive uses ZCU-14 control unit. UCU-20 control unit is available with plus code +V998. For more information on the UCU-20 control unit, refer to UCU-20 control unit hardware manual (3AXD50001079246 [English]).

ZCU-14 layout

This figure shows the layout of the ZCU-14 control unit.

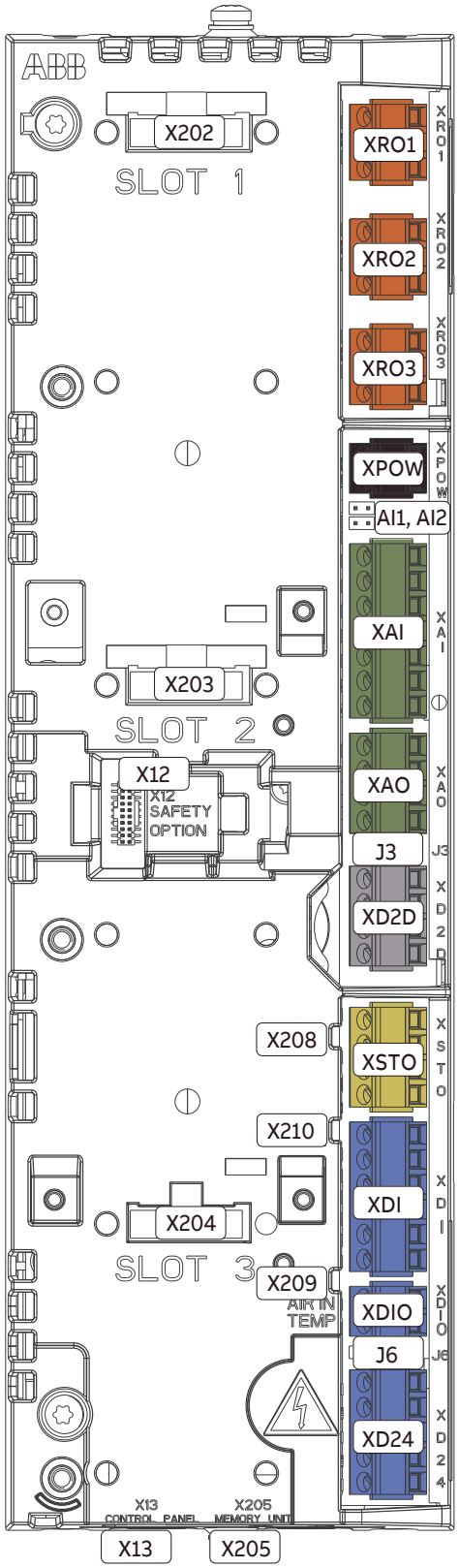

	Description
XPOW	External power input
XAI	Analog inputs
XAO	Analog outputs
XD2D	Drive-to-drive link or Modbus/RTU
XRO1	Relay output RO1
XRO2	Relay output RO2
XRO3	Relay output RO3
XD24	Digital input interlock (DIIL) and +24 V output
XDIO	Digital input/outputs
XDI	Digital inputs
XSTO	Safe torque off connection (inverter unit only). **Note:** This connection only acts as a true Safe torque off input when the ZCU is controlling an inverter unit. When the ZCU is controlling a supply unit, de-energizing the inputs will stop the unit but will not constitute a true safety function.
X12	Connection for FSO safety functions module (inverter unit only).
X13	Control panel connection
X202	Option slot 1
X203	Option slot 2
X204	Option slot 3
X205	Memory unit connection
X208	Cooling fan 1 connection
X209	Connection for ambient temperature sensor (at air inlet). Connected at the factory.
X210	Cooling fan 2 connection
AI1, AI2	Voltage/Current selection jumpers (AI1, AI2) for analog inputs
J3	Drive-to-drive link termination switch (J3)
J6	Common digital input ground selection jumper (J6).

Default control connection diagram of the drive control unit (ZCU)

Connection	Term	Description
XPOW External power input		
1 +24VI 2 GND	+24VI GND	24 V DC, 2 A min. (without optional modules)
XAI Reference voltage and analog inputs		
1 +VREF	+VREF	10 V DC, R_L 1…10 kohm
2 -VREF	-VREF	-10 V DC, R_L 1…10 kohm
3 AGND	AGND	Ground
4 AI1+	AI1+	**Speed reference**
5 AI1-	AI1-	0(2)…10 V, R_{in} > 200 kohm[1)]
6 AI2+	AI2+	By default not in use.
7 AI2-	AI2-	0(4)…20 mA, R_{in} = 100 ohm[1)]
AI2:I AI1:I	J1	Current (I) / voltage (U) selection jumper for AI1
AI2:U AI1:U	J2	Current (I) / voltage (U) selection jumper for AI2
XAO Analog outputs		
1 AO1	AO1	**Motor speed rpm**
2 AGND	AGND	0…20 mA, R_L < 500 ohm
3 AO2	AO2	**Motor current**
4 AGND	AGND	0…20 mA, R_L < 500 ohm
XD2D Drive-to-drive link		
1 B	B	Master/follower, drive-to-drive or embedded fieldbus connection
2 A	A	
3 BGND	BGND	
4 Shield	Shield	
	J3	Drive-to-drive link termination
XRO1, XRO2, XRO3 Relay outputs		
11 NC	NC	**Ready run**
12 COM	COM	250 V AC / 30 V DC
13 NO	NO	2 A
21 NC	NC	**Running**
22 COM	COM	250 V AC / 30 V DC
23 NO	NO	2 A
31 NC	NC	**Fault (-1)**
32 COM	COM	250 V AC / 30 V DC
33 NO	NO	2 A
2 +24VD (XD24)		
5 DIOGND (XD24)		

Connection	Term	Description
XD24 Auxiliary voltage output, digital interlock		
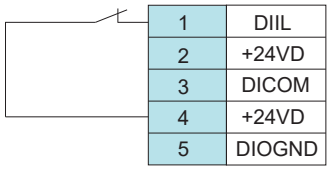	DIIL	Run enable
	+24VD	+24 V DC 200 mA [2]
	DICOM	Digital input ground
	+24VD	+24 V DC 200 mA [2]
	DIOGND	Digital input/output ground
XDIO Digital input/outputs		
	DIO1	Output: Ready run
	DIO2	Output: Running
	J6	Ground selection [3]
XDI Digital inputs		
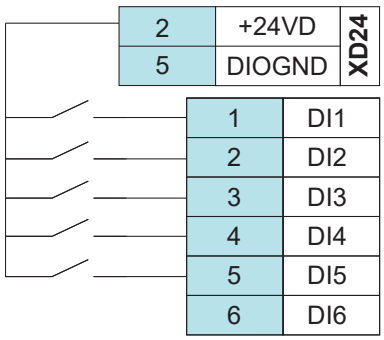	DI1	Stop (0) / Start (1)
	DI2	Forward (0) / Reverse (1)
	DI3	Reset
	DI4	Acc/Dec time select [4]
	DI5	Constant speed 1 (1 = On) [5]
	DI6	By default, not in use.
XSTO Safe torque off connection		
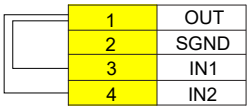	OUT	IN1 and IN2 are connected to OUT at the factory. To enable start and operation, IN1 and IN2 must be connected to OUT. Refer to chapter The Safe torque off function (page 169).
	SGND	
	IN1	
	IN2	
X12	Safety options connection	
X13	Control panel connection	
X205	Memory unit connection	

1) Current [0(4)…20 mA, R_{in} = 100 ohm] or voltage [0(2)…10 V, R_{in} > 200 kohm] input selected by jumper. Change of setting requires reboot of control unit.
2) Total load capacity of these outputs is 4.8 W (200 mA at 24 V) minus the power taken by DIO1 and DIO2.
3) Determines whether DICOM is separated from DIOGND (ie. common reference for digital inputs floats; in practice, selects whether the digital inputs are used in current sinking or sourcing mode). See also ZCU ground isolation diagram (page 107). DICOM=DIOGND ON: DICOM connected to DIOGND. OFF: DICOM and DIOGND separate.
4) 0 = Acceleration/deceleration ramps defined by parameters *23.12/23.13* in use. 1 = Acceleration/deceleration ramps defined by parameters *23.14/23.15* in use.
5) Constant speed 1 is defined by parameter *22.26*.

Additional information on the connections

Connecting motor temperature sensors to the drive

Refer to the electrical planning instructions.

Power supply for the control unit (XPOW)

Connect a power supply to the control unit through terminal block XPOW.

Refer to the control unit connector data for the current and voltage ratings of the power supply.

Connect an additional external power supply to the free +24 V and GND terminals of the XPOW terminal block if:

- the control unit must be kept operational during input power breaks, for example, because of continuous fieldbus communication
- immediate restart is necessary after a power break (that is, no control unit power-up delay is permitted).

Digital interlock (DIIL)

Digital interlock input (DIIL) terminal is originally intended for interlock signals that stop the drive/unit when necessary. In the ACS880 primary control program, DIIL terminal is the source for the run enable signal by default. The inverter unit or drive cannot start, or it stops when there is no DIIL signal. In other control programs (and units), the default use of the DIIL terminal varies. Refer to the firmware manual for more information.

Note: This input is **not** SIL or PL classified.

The XD2D connector

The XD2D connector provides an RS-485 connection that can be used for

- basic master/follower communication with one master drive and multiple followers,
- fieldbus control through the embedded fieldbus interface (EFB), or
- drive-to-drive (D2D) communication implemented by application programming.

See the firmware manual for the related parameter settings.

Terminate the bus on the units at the ends of the drive-to-drive link. Disable bus termination on the intermediate units.

Use a shielded twisted-pair cable for data, and another pair or a wire for signal ground (nominal impedance 100…165 ohm, for example Belden 9842). For the best immunity, ABB recommends high quality cable. Keep the cable as short as possible. Avoid unnecessary loops and parallel runs near power cables such as motor cables.

The diagram that follows shows the wiring of the drive-to-drive link. The diagram is applicable to these control units:

- ZCU-14

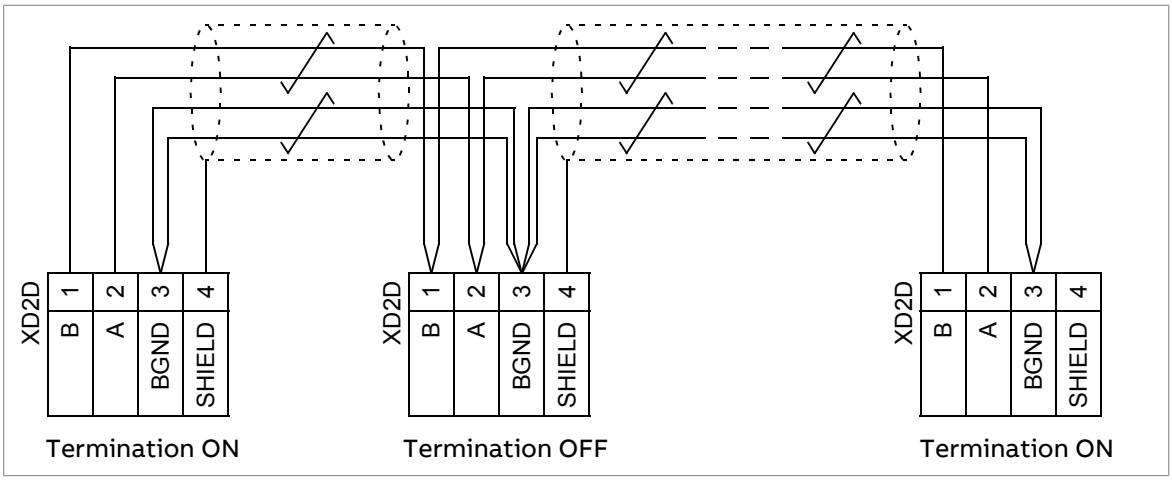

Safe torque off (XSTO)

The XSTO input only acts as a true Safe torque off input on the inverter control unit. De-energizing the STO input terminals of other control units (supply, DC/DC converter, or brake unit) stops the unit but does not constitute a SIL/PL classified safety function.

Safety functions module connection (X12)

In drives or inverter units with a compatible control program, an optional FSO safety functions module can be connected to the X12 connector. The control program in supply, brake, and DC/DC converter units does not support the FSO safety functions module.

For more information on the FSO safety functions module, refer to the applicable FSO module user's manual.

Note: Inverter modules and control units that have a sticker with the text “No FSO support” are not compatible with the FSO safety functions module.

Connector data

The wire size accepted by all screw terminals (for both stranded and solid wire) is 0.5 … 2.5 mm^2 (22…12 AWG). Connector pitch is 5 mm.

The maximum tightening torque for screw terminals is 0.5 N·m (5 lbf·in).

Power supply (XPOW)	24 V DC (±10%), 2 A External power input.
Relay outputs RO1…RO3 (XRO1…XRO3)	250 V AC / 30 V DC, 2 A Protected by varistors
+24 V output (XD24:5 and XD24:7)	Total load capacity of these outputs is 4.8 W (200 mA / 24 V) minus the power taken by DIO1 and DIO2.
Digital inputs DI1…DI6 (XDI:1…XDI:6)	24 V logic levels: “0” < 5 V, “1” > 15 V R_{in}: 2.0 kohm (DI1…DI5) Input type: NPN/PNP (DI1…DI5), PNP (DI6) Hardware filtering: 0.04 ms, digital filtering up to 8 ms I_{max}: 15 mA (DI1…DI5), 5 mA (DI6)
Start interlock input DIIL (XD24:1)	24 V logic levels: "0" < 5 V, "1" > 15 V R_{in}: 2.0 kohm Input type: NPN/PNP Hardware filtering: 0.04 ms, digital filtering up to 8 ms
Digital inputs/outputs DIO1 and DIO2 (XDIO:1 and XDIO:2) Input/output mode selection by parameters. DIO1 can be configured as a frequency input (0…16 kHz with hardware filtering of 4 microseconds) for 24 V level square wave signal (sinusoidal or other wave form cannot be used). In some control programs, DIO2 can be configured as a 24 V level square wave frequency output. Refer to the firmware manual, parameter group 11.	As inputs: 24 V logic levels: "0" < 5 V, "1" > 15 V. R_{in}: 2.0 kohm. Filtering: 1 ms. As outputs: Total output current from +24VD is limited to 200 mA 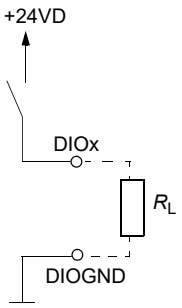
Reference voltage for analog inputs +VREF and -VREF (XAI:1 and XAI:2)	10 V ±1% and -10 V ±1%, R_{load} 1…10 kohm Maximum output current: 10 mA
Analog inputs AI1 and AI2 (XAI:4 … XAI:7). Current/voltage input mode selection by jumpers	Current input: -20…20 mA, R_{in} = 100 ohm Voltage input: -10…10 V, R_{in} > 200 kohm Differential inputs, common mode range ±30 V Sampling interval per channel: 0.25 ms Hardware filtering: 0.25 ms Resolution: 11 bit + sign bit Inaccuracy: 1% of full scale range
Analog outputs AO1 and AO2 (XAO)	0…20 mA, R_{load} < 500 ohm Frequency range: 0…300 Hz Resolution: 11 bit + sign bit Inaccuracy: 2% of full scale range

XD2D connector	Physical layer: RS-485 Transmission rate: 8 Mbit/s Cable type: Shielded twisted-pair cable with a twisted pair for data and a wire or another pair for signal ground (nominal impedance 100 … 165 ohm, for example Belden 9842) Maximum length of link: 50 m (164 ft) Termination by jumper
RS-485 connection (X485)	Physical layer: RS-485 Cable type: Shielded twisted-pair cable with a twisted pair for data and a wire or another pair for signal ground (nominal impedance 100 … 165 ohm, for example Belden 9842) Maximum length of link: 50 m (164 ft)
Safe torque off connection (XSTO)	Input voltage range: -3…30 V DC Logic levels: "0" < 5 V, "1" > 17 V. **Note:** Both circuits must be closed to enable start and operation (IN1 and IN2 must be connected to OUT). This applies to all control units (including drive, inverter, supply, brake, DC/DC converter etc. control units), but SIL/PL classified Safe torque off functionality is only achieved through the XSTO connector of the drive/inverter control unit. Current consumption: 66 mA (continuous) per STO channel EMC (immunity) according to IEC 61326-3-1 and IEC 61800-5-2
Control panel connection (X13)	Connector: RJ-45 Cable length < 100 m (328 ft)
The terminals of the control unit fulfill the Protective Extra Low Voltage (PELV) requirements. The PELV requirements of a relay output are not fulfilled if a voltage higher than 48 V is connected to the relay output.	

ZCU ground isolation diagram

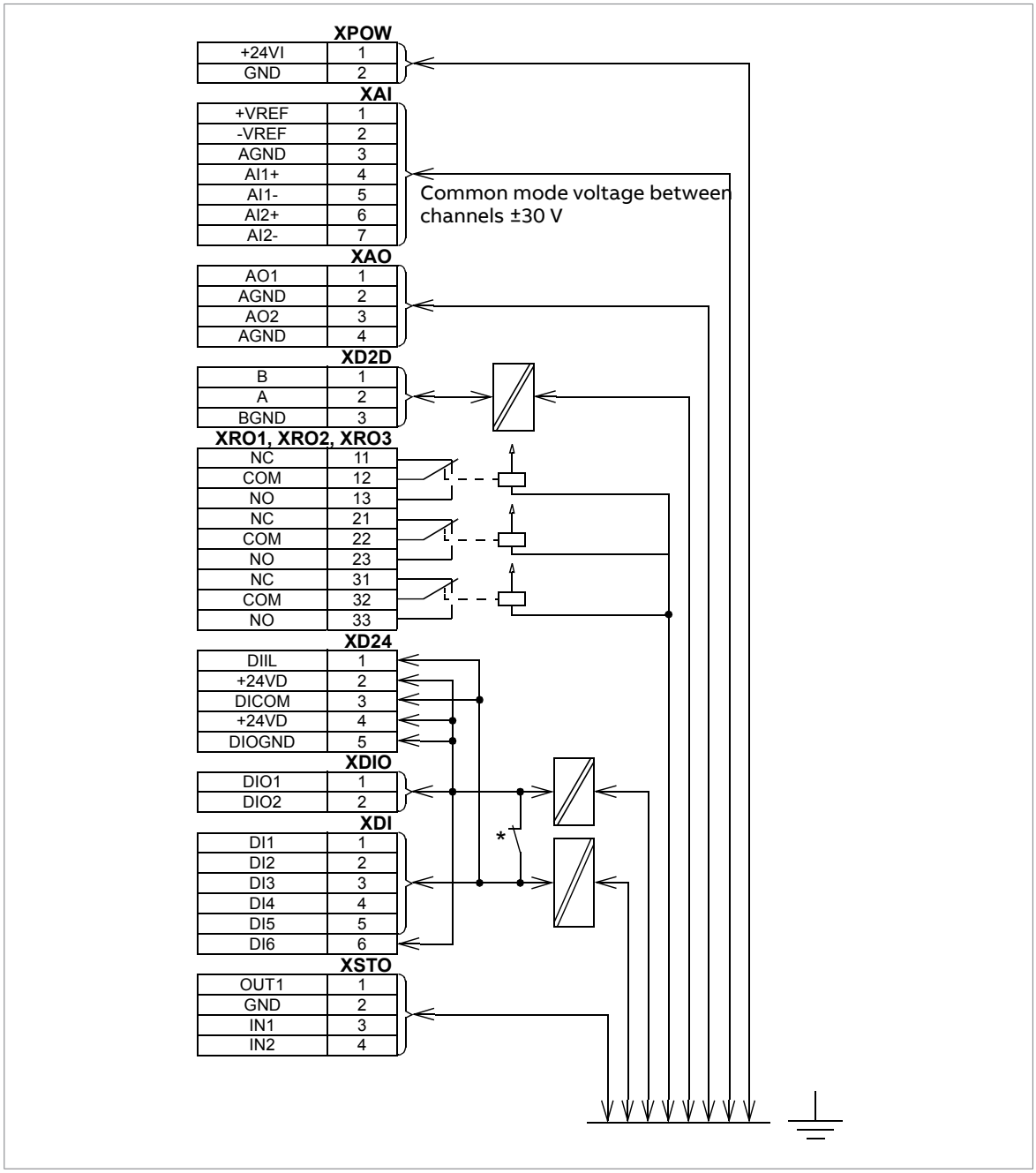

* Ground selector (J6) settings

All digital inputs share a common ground (DICOM connected to DIOGND). This is the default setting.

Ground of digital inputs DI1…DI5 and DIIL (DICOM) is isolated from DIO signal ground (DIOGND). Isolation voltage 50 V.

9

Installation checklist

Contents of this chapter

This chapter contains a checklist for the mechanical and electrical installation of the drive.

Checklist

WARNING Obey the safety instructions of the drive. If you ignore them, injury or death, or damage to the equipment can occur. If you are not a qualified electrical professional, do not do electrical installation, commissioning or maintenance work.

WARNING Do the steps in section Electrical safety precautions (page 16) before you start the work.

Examine the mechanical and electrical installation of the drive before start-up. Do the tasks in the checklist together with a second person.

Make sure that ...	☑
The ambient operating conditions meet the drive ambient conditions specification and enclosure rating (IP code).	☐
The supply voltage matches the nominal input voltage of the drive. Refer to the type designation label.	☐
The insulation resistance of the input power cable, motor cable and motor is measured according to local regulations and the manuals of the drive.	☐
The drive cabinet is attached to the floor, and if necessary due to vibration etc, also by its top to the wall or roof.	☐
The drive module is fastened properly to the enclosure.	☐

Make sure that ...	☑
The cooling air can flow freely in and out of the drive. Air recirculation inside the cabinet is not possible (air baffle plates are installed, or there is another air guiding solution).	☐
If the drive is connected to a network other than a symmetrically grounded TN-S system: You have done all the required modifications (for example, you may need to disconnect the EMC filter or ground-to-phase varistor). Refer to the electrical installation instructions.	☐
The enclosures of the equipment in the cabinet have proper galvanic connection to the cabinet protective earth (ground) busbar; The connection surfaces at the fastening points are bare (unpainted) and the connections are tight, or separate grounding conductors have been installed.	☐
The main circuit connections inside the drive cabinet correspond to the circuit diagrams.	☐
The control unit has been connected. Refer to the circuit diagrams.	☐
Appropriate AC fuses and main disconnecting device are installed.	☐
There is an adequately sized protective earth (ground) conductor(s) between the drive and the switchboard, the conductor is connected to correct terminal, and the terminal is tightened to the correct torque. Grounding has also been measured according to the regulations.	☐
The input power cable is connected to the correct terminals, the phase order is correct, and the terminals are tightened to the correct torque.	☐
There is an adequately sized protective earth (ground) conductor between the motor and the drive. The conductor is connected to the correct terminal, and the terminal is tightened to the correct torque. Grounding has also been measured according to the regulations.	☐
The motor cable is connected to the correct terminals, the phase order is correct, and the terminals are tightened to the correct torque.	☐
The motor cable is routed away from other cables.	☐
No power factor compensation capacitors are connected to the motor cable.	☐
If an external brake resistor is connected to the drive: There is an adequately sized protective earth (ground) conductor between the brake resistor and the drive, and the conductor is connected to the correct terminal, and the terminals are tightened to the correct torque. Grounding has also been measured according to the regulations.	☐
If an external brake resistor is connected to the drive: The brake resistor cable is connected to the correct terminals, and the terminals are tightened to the correct torque.	☐
If an external brake resistor is connected to the drive: The brake resistor cable is routed away from other cables.	☐
The control cables are connected to the correct terminals, and the terminals are tightened to the correct torque.	☐
If a drive bypass connection will be used: The direct-on-line contactor of the motor and the drive output contactor are either mechanically and/or electrically interlocked, that is, they cannot be closed at the same time. A thermal overload device must be used for protection when bypassing the drive. Refer to local codes and regulations.	☐
There are no tools, foreign objects or dust from drilling inside the drive.	☐
The area in front of the drive is clean: the drive cooling fan cannot draw any dust or dirt inside.	☐
The terminal box cover of the motor is in place. Cabinet shrouds are in place and doors are closed.	☐
The motor and the driven equipment are ready for power-up.	☐

10

Start-up

Contents of this chapter

This chapter describes the start-up procedure of the drive.

Reforming the capacitors

The capacitors must be reformed if the drive has not been powered (either in storage or unused) for a year or more. The manufacturing date is on the type designation label. For information on reforming the capacitors, refer to Capacitor reforming instructions (3BFE64059629 [English]).

Start-up procedure

1. Only qualified electrical professionals are allowed to start-up the drive.
2. Make sure that the installation of the drive module has been checked according to the checklist in chapter Installation checklist, and that the motor and driven equipment are ready for start.
3. Perform the start-up tasks instructed by the cabinet-installer of the drive module.
4. Switch the power on, setup the drive control program, and perform the first start of the drive and motor. See Quick start-up guide for ACS880 drives with primary control program (3AUA0000098062 [English]) or ACS880 primary control program firmware manual (3AUA0000085967 [English]). If you need more information on the use of the control panel, see ACS-AP-I, -S, -W and ACH-AP-H, -W Assistant control panels user's manual (3AUA0000085685 [English]).

- For drives with resistor braking (option +D150): See also section Start-up in chapter Resistor braking.
- For drives with ABB d*u*/d*t* filter: Make sure that bit 13 of parameter 95.20 HW options word 1 is switched on.
- For drives with ABB sine filter: Make sure that parameter 95.15 Special HW settings is set to ABB sine filter. For other sine filters: See Sine filter hardware manual (3AXD50000016814 [English]).

5. For drives with ABB motors in explosive atmospheres: See also ACS880 drives with ABB motors in explosive atmospheres (3AXD50000019585 [English]).
6. For drive modules in which the Safe torque off function is in use: Test and validate the operation of the Safe torque off function. See Validation test procedure (page 177).
7. For drive modules with an FSO-xx safety functions module (options +Q972 and Q973): Test and validate the operation of the safety functions. See the delivery-specific circuit diagrams and FSO-12 safety functions module user's manual (3AXD50000015612 [English]) or FSO-21 safety functions module user's manual (3AXD50000015614 [English]).

11

Fault tracing

Contents of this chapter

This chapter describes the fault tracing possibilities of the drive.

LEDs

The table below describes the LEDs of the drive module with option +J410.

Where	LED	Color	When the LED is lit
Control panel mounting platform	POWER	Green	Control unit is powered and +15 V is supplied to the control panel
	FAULT	Red	Drive in fault state

Warning and fault messages

See the quick installation and start-up guide or the firmware manual for the descriptions, causes and remedies of the control program warning and fault messages.

12

Maintenance

Contents of this chapter

This chapter contains maintenance instructions of the drive modules.

Maintenance intervals

The tables show the maintenance tasks that can be done by the end user. For the ABB Service offering, contact your local ABB Service representative (new.abb.com/contact-centers).

Description of symbols

Action	Description
I	Inspection (visual inspection and maintenance action if needed)
P	Performance of on/off-site work (commissioning, tests, measurements or other work)
R	Replacement

Recommended maintenance intervals after start-up

Component	Years from start-up												
	1	2	3	4	5	6	7	8	9	10	11	12	...
Cooling													
Main cooling fan									R				
Circuit board compartment cooling fan									R				
NSIN filter cooling fan									R				
Batteries													
Control panel battery									R				
Control unit battery						R						R	
Connections and environment													
Cabinet door filters (IP54)	R	R	R	R	R	R	R	R	R	R	R	R	R
Quality of supply voltage	P	P	P	P	P	P	P	P	P	P	P	P	P
Spare parts													
Spare part stock	I	I	I	I	I	I	I	I	I	I	I	I	I
Reforming DC circuit capacitors (spare modules and spare capacitors)	P	P	P	P	P	P	P	P	P	P	P	P	P
Inspections by user													
Air inlet and outlet meshes (IP22/IP42)	I	I	I	I	I	I	I	I	I	I	I	I	I
Tightness of terminals	I	I	I	I	I	I	I	I	I	I	I	I	I
Ambient conditions (dustiness, moisture, corrosion, temperature)	I	I	I	I	I	I	I	I	I	I	I	I	I
Cleaning of heatsinks	I	I	I	I	I	I	I	I	I	I	I	I	I
Funtional safety													
Safety function test	I See the maintenance information of the safety function.												
Safety component expiry (Mission time, T_M)	20 years												

Note:

- The maintenance and component replacement intervals are based on the assumption that the equipment operates within the specified ratings and ambient conditions. ABB recommends annual drive inspections to ensure the highest reliability and optimum performance.
- Long-term operation near the specified maximum ratings or ambient conditions may require shorter maintenance intervals for certain components. Contact your local ABB Service representative for additional maintenance recommendations.

Cabinet

Cleaning the interior of the cabinet

WARNING Obey the safety instructions of the drive. If you ignore them, injury or death, or damage to the equipment can occur. If you are not a qualified electrical professional, do not do electrical installation, commissioning or maintenance work.

NOTICE Use an antistatic wrist strap and a vacuum cleaner with an antistatic hose and nozzle. A normal vacuum cleaner creates static discharges which can cause damage to circuit boards.

1. Stop the drive and do the steps in section Electrical safety precautions (page 16) before you start the work.
2. Open the cabinet door.
3. Clean the interior of the cabinet. Use a vacuum cleaner and a soft brush.
4. Clean the air inlets of the fans and air outlets of the modules (top).
5. Clean the air inlet gratings (if any) on the door.
6. Close the door.

Heatsink

The drive module heatsink collects dust from the cooling air. If the heatsink is not clean, the drive can generate overtemperature warnings and faults. When necessary, clean the heatsink as described in this section.

Cleaning the interior of the heatsink

WARNING Obey the safety instructions of the drive. If you ignore them, injury or death, or damage to the equipment can occur.

NOTICE Use an antistatic wrist strap and a vacuum cleaner with an antistatic hose and nozzle. A normal vacuum cleaner creates static discharges which can cause damage to circuit boards.

1. Stop the drive and do the steps in section Electrical safety precautions (page 16) before you start the work.
2. Undo the attaching screws of the cover plate on the service opening.
3. Remove the plate.
4. Carefully blow clean compressed air (not humid or oily) upwards from the opening and, at the same time, vacuum from the top of the drive module. Prevent dust from entering adjoining equipment.
5. Reinstall the cover plate.

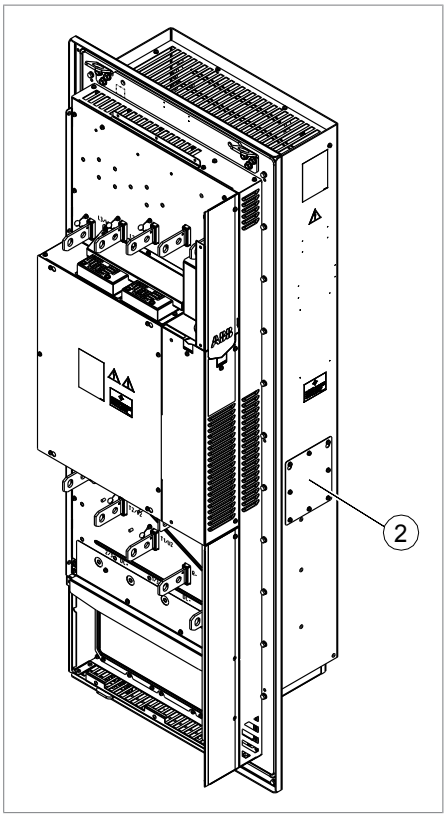

Fans

The lifespan of the cooling fans of the drive depends on running time, ambient temperature and dust concentration. Refer to the firmware manual for the actual signal which indicates the running time of the cooling fan. Reset the running time signal after fan replacement.

Replacement fans are available from ABB. Do not use other than ABB-specified spare parts.

Replacing the circuit board compartment cooling fans

WARNING Obey the safety instructions of the drive. If you ignore them, injury or death, or damage to the equipment can occur.

1. Stop the drive and do the steps in section Electrical safety precautions (page 16) before you start the work.
2. Remove the cover.
3. Undo the fastening screw of the fan enclosure.
4. Unplug the power supply cable of the fan.
5. Install the new fan in reverse order to the above.
6. Reset the counter (if used) in group 5 in the control program.

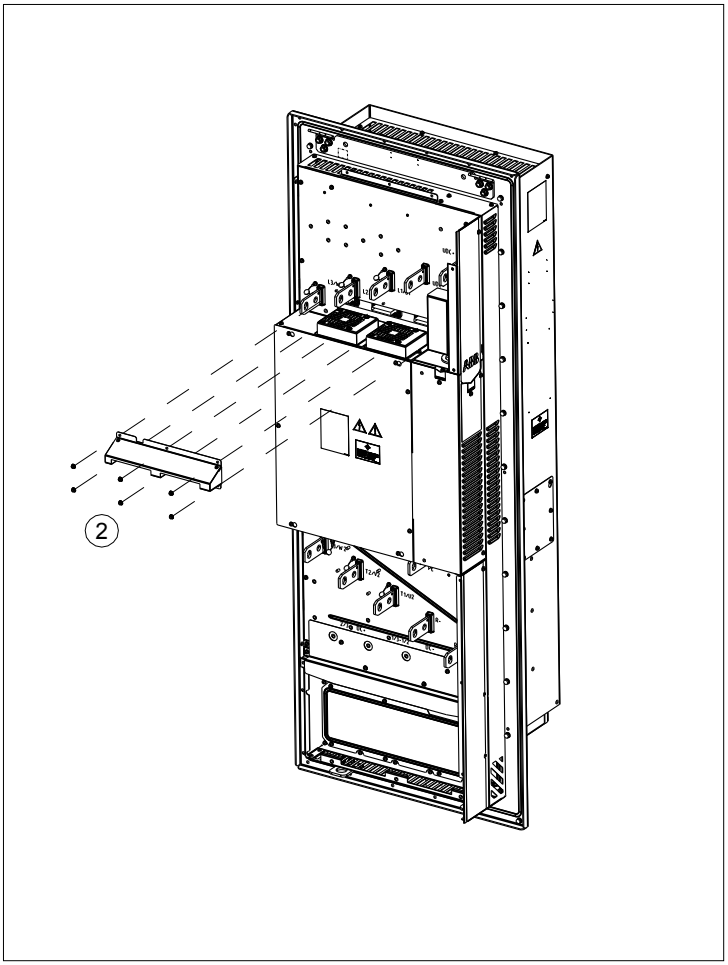
2

3

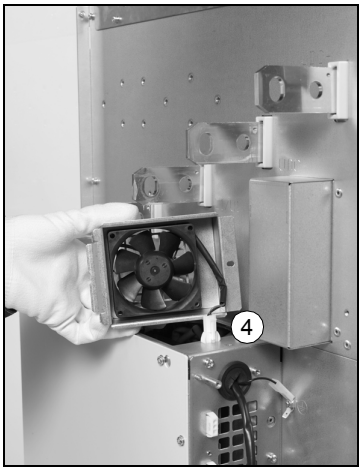
4

Replacing the main cooling fans

The main cooling fans can be replaced from the front side and the back side.

WARNING Obey the safety instructions of the drive. If you ignore them, injury or death, or damage to the equipment can occur.

To replace the main cooling fans from the front side:

1. Stop the drive and do the steps in section Electrical safety precautions (page 16) before you start the work.
2. If motor cables are connected to the output terminals, disconnect them.
3. Undo the mounting screws of the fan cassette cover and remove the cover.
4. Disconnect the power supply wires of the fans.
5. Pull the fan cassette out.
6. Install the new fan cassette in reverse order to the above.
7. Reset the counter (if used) in group 5 in the primary control program.

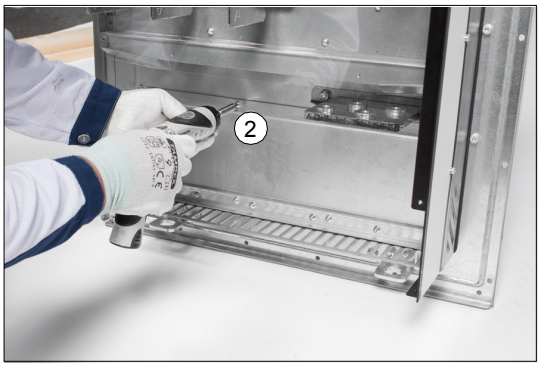

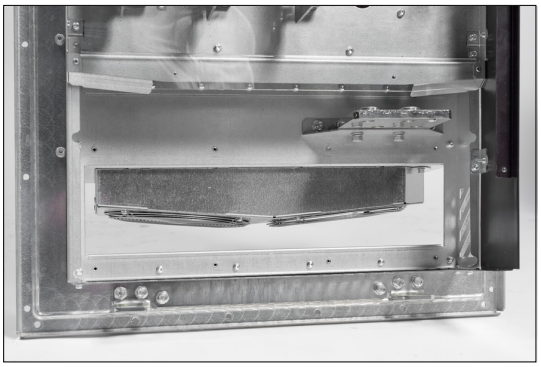

To replace the main cooling fans from the back side:

1. Stop the drive and do the steps in section Electrical safety precautions (page 16) before you start the work.
2. Undo the locking screw.
3. Push the fan cassette to the left.
4. Take the cassette down.
5. Disconnect the power supply wires of the fans, see the previous page.
6. Install the new fan cassette in reverse order to the above.
7. Reset the counter (if used) in group 5 in the primary control program.

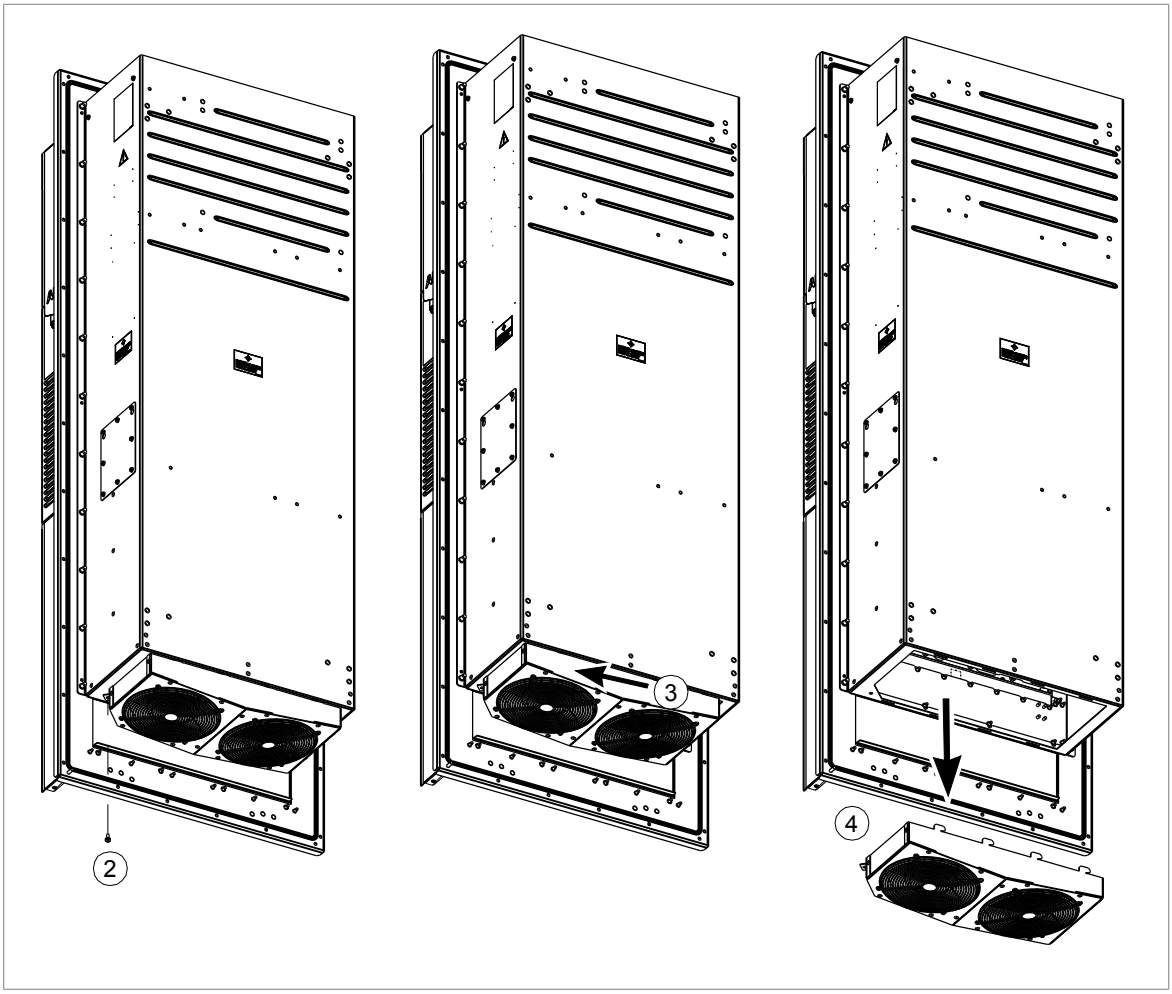

Replacing the standard drive module

WARNING Obey the safety instructions of the drive. If you ignore them, injury or death, or damage to the equipment can occur.

Note: The replacement module must be of the same type as the original module: same type code and same option codes.

Handle the drive module carefully:

- Use safety shoes with a metal toe cap to prevent foot injury.
- Lift the drive module only by the lifting lugs.

1. Stop the drive and do the steps in section Electrical safety precautions (page 16) before you start the work.
2. Disconnect the power cables.
3. Disconnect the power supply, BGDR and fiber optic cables from the drive module.
4. Disconnect the power supply cable and the fiber optic cables from the external control unit and coil them on the top of the drive module.
5. Remove the screws that attach the drive module to the cabinet.
6. Install the new module in reverse order.

Capacitors

The intermediate DC circuit of the drive contains several electrolytic capacitors. Operating time, load, and surrounding air temperature have an effect on the life of the capacitors. Capacitor life can be extended by decreasing the surrounding air temperature.

Capacitor failure is usually followed by damage to the unit and an input cable fuse failure, or a fault trip. If you think that any capacitors in the drive have failed, contact ABB.

Reforming the capacitors

The capacitors must be reformed if the drive has not been powered (either in storage or unused) for a year or more. The manufacturing date is on the type designation label. For information on reforming the capacitors, refer to Capacitor reforming instructions (3BFE64059629 [English]).

Control panel

See ACS-AP-I, -S, -W and ACH-AP-H, -W assistant control panels user's manual (3AUA0000085685 [English]).

Control unit

For maintenance information of the UCU-20 control unit (option +V998), refer to UCU-20 control unit hardware manual (3AXD50001079246 [English]).

Replacing the ZCU-14 control unit battery

⚠WARNING Obey the safety instructions of the drive. If you ignore them, injury or death, or damage to the equipment can occur. If you are not a qualified electrical professional, do not do electrical installation, commissioning or maintenance work.

1. Stop the drive and do the steps in section Electrical safety precautions (page 16) before you start the work.
2. Remove the M4×8 (T20) screws at the ends of the control unit.
3. To see the battery, remove the XD2D terminal block.
4. Carefully lift the edge of the control unit cover on the side with the I/O terminal blocks.
5. Pull the battery out of the battery holder.
6. Put a new CR2032 battery into the battery holder.
7. Close the control unit cover.
8. Tighten the M4×8 (T20) screws.
9. Install the XD2D terminal block.

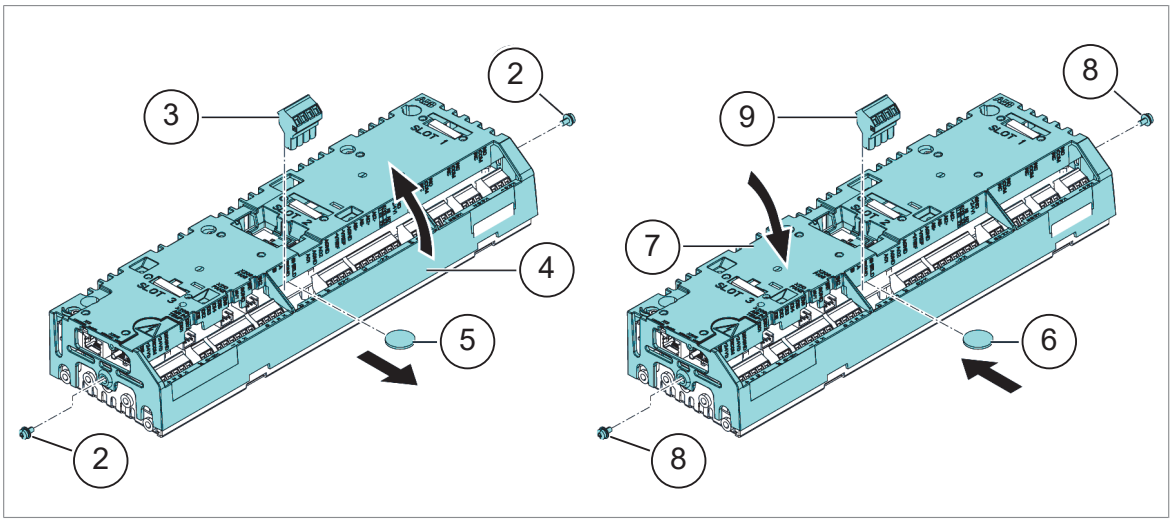

Replacing the memory unit of ZCU-14

⚠WARNING Obey the safety instructions of the drive. If you ignore them, injury or death, or damage to the equipment can occur. If you are not a qualified electrical professional, do not do electrical installation, commissioning or maintenance work.

⚠WARNING Do not remove or install the memory unit when the control unit is energized. There can be a risk of electric shock from relay outputs or adjacent equipment. Also, damage to the control unit or memory unit can occur.

After replacing a control unit, you can keep the existing parameter settings by transferring the memory unit from the defective control unit to the new control unit.

After power-up, the control unit will scan the memory unit. This can take several minutes.

1. Stop the drive and do the steps in section Electrical safety precautions (page 16) before you start the work.
2. Pull the clip of the memory unit forward.

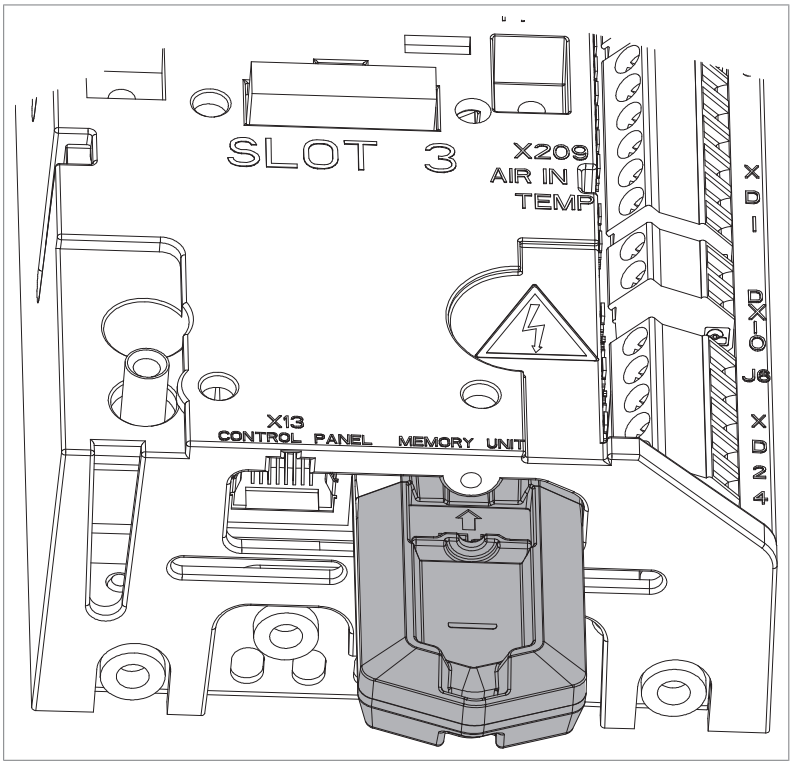

3. Remove the memory unit.
4. Install a new memory unit in reverse order.

Functional safety components

The mission time of functional safety components is 20 years which equals the time during which failure rates of electronic components remain constant. This applies to the components of the standard Safe torque off circuit as well as any modules, relays and, typically, any other components that are part of functional safety circuits.

The expiry of mission time terminates the certification and SIL/PL classification of the safety function. The following options exist:

- Renewal of the whole drive and all optional functional safety module(s) and components.
- Renewal of the components in the safety function circuit. In practice, this is economical only with larger drives that have replaceable circuit boards and other components such as relays.

Note that some of the components may already have been renewed earlier, restarting their mission time. The remaining mission time of the whole circuit is however determined by its oldest component.

For more information, contact ABB.

13

Ordering information

Contents of this chapter

This chapter gives ordering information on additional components available from ABB for the drive module installation.

Note: This chapter lists only the installation accessories available from ABB. All other parts must be sourced from a third party by the system integrator.

Output (d*u*/d*t*) filters

See section d*u*/d*t* filters (page 195).

Sine filters

See section Sine filters (page 196).

FSO accessories kit

Kit code	Ordering code	Illustration
A-X-X-279	3AXD50000025495	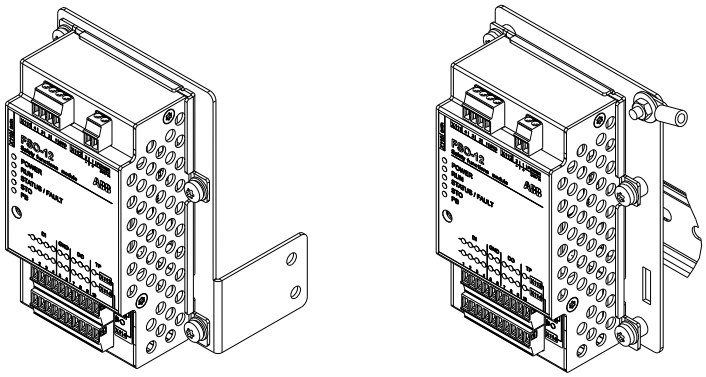 Instruction code: 3AXD50000025583

Retrofit accessory kits

Kit	Option code	Ordering code
Common mode filter kit	+E208	3AXD50000026145
Full size cable connection terminals for input power cables	+H370	3AXD50000019542
Full size cable connection terminals for output power cables	1)	3AXD50000019544
For frame R11: IP20 shrouds for covering the input and motor cabling area	2)	3AXD50000019538

1) The drive module is delivered with full size cable connection terminals for output power cables as standard. They can be excluded with option +0H371.

2) The drive module is delivered with IP20 shrouds for covering the input and motor cabling area as standard. The shrouds can be excluded with option +0B051.

14

Technical data

Contents of this chapter

This chapter contains the technical specifications of the drive, for example the ratings, sizes and technical requirements, provisions for fulfilling the requirements for CE and other markings.

Electrical ratings

The ratings of the drive module packages with 50 Hz and 60 Hz supply are given below.

IEC RATINGS											
ACS880-04F-...	Frame size	Input current	Output ratings								
			Nominal use					Light-duty use		Heavy-duty use	
		I_1	I_{max}	I_{max_start}	I_2	P_n	S_n	I_{Ld}	P_{Ld}	I_{Hd}	P_{Hd}
		A	A	A	A	kW	kVA	A	kW	A	kW
U_n = 400 V											
504A-3	R11	504	560	671	504	250	349	485	250	361	200
584A-3	R11	584	730	828	584	315	405	575	315	429	250
649A-3	R11	649	730	954	649	355	450	634	355	477	250
725A-3	R11	725	1020	1100	725	400	502	715	400	566	315
820A-3	R11	820	1020	1100	820	450	568	810	450	625	355
880A-3	R11	880	1100	1100	880	500	610	865	500	725*	400
U_n = 500 V											
459A-5	R11	459	560	671	459	315	398	450	315	330	200
502A-5	R11	502	560	671	502	355	435	483	315	361	250
582A-5	R11	582	730	828	582	400	504	573	400	414	250
634A-5	R11	634	730	954	634	450	549	623	450	477	315

IEC RATINGS											
ACS880-04F-...	Frame size	Input current	Output ratings								
			Nominal use					Light-duty use		Heavy-duty use	
		I_1	I_{max}	I_{max_start}	I_2	P_n	S_n	I_{Ld}	P_{Ld}	I_{Hd}	P_{Hd}
		A	A	A	A	kW	kVA	A	kW	A	kW
715A-5	R11	715	850	1100	715	500	619	705	500	566	400
820A-5	R11	820	1020	1100	820	560	710	807	560	625	450
880A-5	R11	880	1100	1100	880	560	762	857	560	697*	500
U_n = 690 V											
329A-7	R11	329	480	510	329	315	393	320	315	255	250
369A-7	R11	369	520	650	369	355	441	360	355	325	315
429A-7	R11	429	520	720	429	400	513	420	400	360**	355
470A-7	R11	470	655	830	470	450	562	455	450	415	400
522A-7	R11	522	655	910	522	500	624	505	500	455	450
590A-7	R11	590	800	1010	590	560	705	571	560	505	500
650A-7	R11	650	820	1100	650	630	777	630	630	571**	560
721A-7	R11	721	820	1100	721	710	862	705	630	571**	560

UL/NEC RATINGS									
ACS880-04F-...	Frame size	Input current	Max. current		Output ratings				
					App. power	Light-duty use		Heavy-duty use	
		I_1	I_{max}	I_{max_start}	S_n	I_{Ld}	P_{Ld}	I_{Hd}	P_{Hd}
		A	A	A	kVA	A	hp	A	hp
U_n = 480 V									
459A-5	R11	459	560	671	398	450	350	330	250
502A-5	R11	502	560	671	435	483	400	361	300
582A-5	R11	582	730	828	504	573	450	414	350
634A-5	R11	634	730	954	549	623	500	477	400
715A-5	R11	715	850	1100	619	705	600	566	450
820A-5	R11	820	1020	1100	710	807	700	625	500
880A-5	R11	880	1100	1100	762	857	700	697**	600
U_n = 575 V									
329A-7	R11	329	480	510	393	320	300	255	250
369A-7	R11	369	520	650	441	360	350	325	300
429A-7	R11	429	520	720	513	420	450	360***	350
470A-7	R11	470	655	830	562	455	450	415	450
522A-7	R11	522	655	910	624	505	500	455	450
590A-7	R11	590	800	1010	705	571	600	505	500
650A-7	R11	650	820	1100	777	630	700	571***	600
721A-7	R11	721	820	1100	862	705	700	571***	600

U_n	Nominal voltage of the drive. For input voltage range, see the type designation key.
I_1	Nominal input current (rms) at 40 °C (104 °F)

I_{max}	Maximum output current. Available for 10 seconds at start, otherwise as long as allowed by drive temperature. 140% … 200% of I_{Hd}, depending on power rating.
I_{max_start}	Maximum output current at start. Available for two seconds only at start every five seconds if start current limit is activated by parameter 30.15 Maximum start current enable.
I_2	Continuous rms output current. No overload capability at 40 °C (104 °F). This is indicated in the type designation label as output current I_2.
P_n	Typical motor power in no-overload use
S_n	Apparent power (no overload)
I_{Ld}	Continuous rms output current allowing 10% overload for 1 minute every 5 minutes
P_{Ld}	Typical motor power for light-overload use
I_{Hd}	Continuous rms output current allowing 50% overload for 1 minute every 5 minutes * Continuous rms output current allowing 40% overload for 1 minute every 5 minutes ** Continuous rms output current allowing 45% overload for 1 minute every 5 minutes *** Continuous rms output current allowing 44% overload for 1 minute every 5 minutes
P_{Hd}	Typical motor power for heavy-duty use
Note: To achieve the rated motor power given in the table, the rated current of the drive must be higher than or equal to the rated motor current. The power ratings apply to most IEC 34 motors at the nominal voltage of the drive. ABB recommends to select the drive, motor and gear combination for the required motion profile with the DriveSize dimensioning tool available from ABB.	

Output derating

When is derating necessary

Derate the continuous output current of the drive if

- ambient temperature exceeds +40 °C (+104 °F) or
- drive is installed higher than 1000 m (3280 ft) above sea level
- switching frequency is other than default
- the minimum requirements of motor cable length are not met (see chapter Filters (page 195)).

Note: The final derating factor is a multiplication of all applicable derating factors.

Ambient temperature derating

In the temperature range +40…55 °C (+104…131 °F), the rated output current is derated by 1% for every added 1 °C (1.8 °F) as follows. Calculate the output current by multiplying the current given in the rating table by the derating factor.

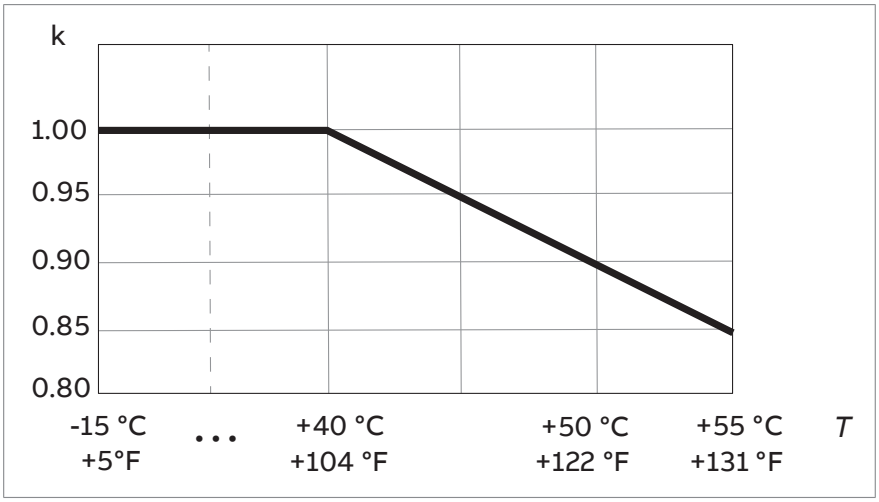

Altitude derating

At altitudes more than 1000 m (3281 ft) above sea level, the output current derating is 1 percentage point for every added 100 m (328 ft). For example, the derating factor for 1500 m (4921 ft) is 0.95. The maximum permitted installation altitude is given in the technical data.

If the surrounding air temperature is less than +40 °C (104 °F), the derating can be reduced by 1.5 percentage points for every 1 °C (1.8 °F) reduction in temperature. A few altitude derating curves are shown below.

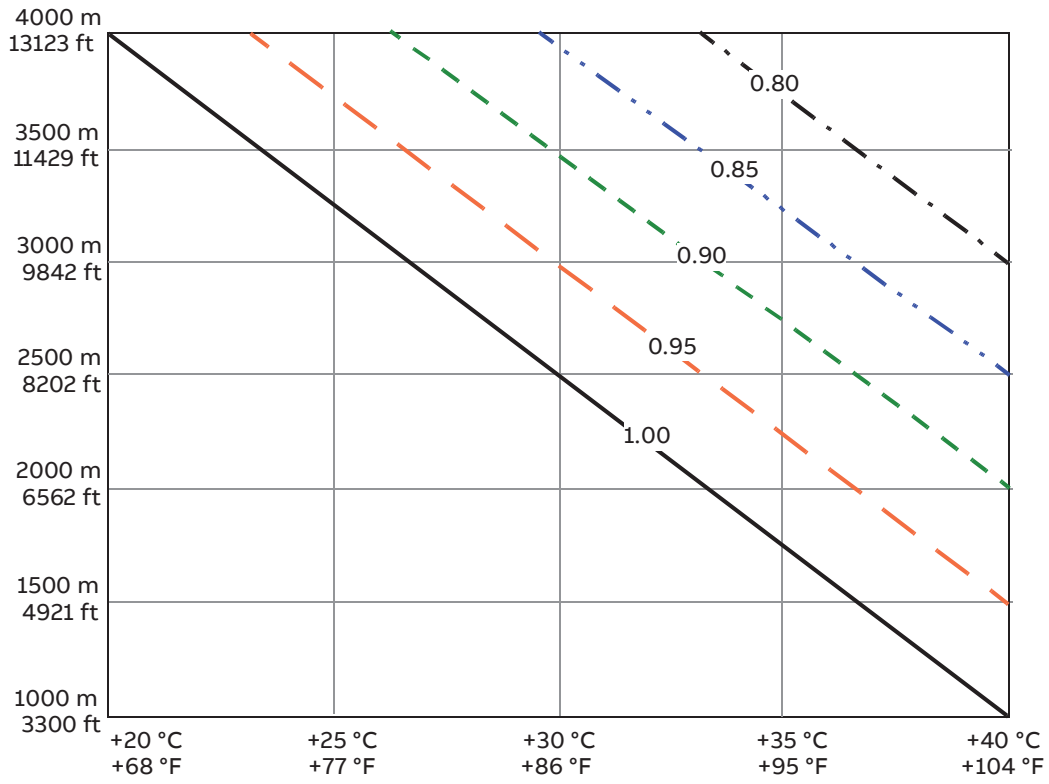

———	Derating factor 1.00
— — —	Derating factor 0.95
- - - -	Derating factor 0.90
-·-·-·-	Derating factor 0.85
— · — · —	Derating factor 0.80

For a more accurate derating, use the DriveSize PC tool.

Deratings for special settings in the drive control program

Enabling special settings in the drive control program can require output current derating.

Ex motor, sine filter, low noise

Table below gives the deratings for these cases:

- drive is used with an ABB motor for explosive atmospheres (Ex) and EX motor in parameter 95.15 Special HW settings is enabled
- sine filter given in the selection table in section Sine filters (page 196) is used and ABB sine filter in parameter 95.15 Special HW settings is enabled
- Low noise optimization is selected in parameter 97.09 Switching freq mode.

With other than recommended sine filters (see Sine filters (page 196)) and non-ABB Ex motors, contact ABB.

ACS880-04F-...	Output ratings for special settings											
	Ex motor (ABB Ex motor)				ABB sine filter				Low noise mode			
	Nominal use		Light-duty use	Heavy-duty use	Nominal use		Light-duty use	Heavy-duty use	Nominal use		Light-duty use	Heavy-duty use
	I_2	P_n	I_{Ld}	I_{Hd}	I_2	P_n	I_{Ld}	I_{Hd}	I_2	P_n	I_{Ld}	I_{Hd}
	A	kW	A	A	A	kW	A	A	A	kW	A	A
U_n = 400 V												
504A-3	479	250	459	345	470	250	450	340	390	200	370	290
584A-3	551	250	533	395	540	250	518	383	437	250	419	311
649A-3	612	315	591	438	600	315	576	425	485	250	466	346
725A-3	667	355	650	493	647	355	628	468	519	250	496	390
820A-3	753	400	737	544	731	400	712	517	587	315	562	431
880A-3	809	450	786	631	785	450	760	600	630	355	600	500*
U_n = 500 V												
459A-5	437	250	427	316	430	250	419	311	357	250	345	265
502A-5	478	315	458	345	470	315	450	340	390	250	370	290
582A-5	531	355	509	364	514	355	487	347	400	250	380	298
634A-5	579	400	553	419	560	400	530	400	410	250	392	298
715A-5	657	450	641	522	637	450	620	507	462	315	428	362
820A-5	753	500	734	576	730	500	710	560	530	355	490	400
880A-5	768	500	747	594	730	500	710	560	550	400	510	410
U_n = 690 V												
329A-7	310	250	300	217	303	250	293	204	232	200	222	157
369A-7	347	315	338	276	340	315	330	260	260	250	250	200
429A-7	377	355	368	315	360	355	350	300**	290	250	280	236**
470A-7	388	355	376	335	360	355	349	308	270	250	261	238
522A-7	431	400	417	370	400	355	388	342	300	250	290	262
590A-7	485	450	470	449	450	400	436	385	340	315	330	300
650A-7	575	500	555	480	550	500	530	450**	450	400	430	350**
721A-7	593	500	574	480	550	500	530	450**	450	400	430	350**
												3AXD00000588487

U_n	Nominal voltage of the drive
I_2	Nominal output current (rms) at 40 °C (104 °F)
P_n	Typical motor power in no-overload use
I_{Ld}	Continuous rms output current allowing 10% overload for 1 minute every 5 minutes *Continuous rms output current allowing 40% overload for 1 minute every 5 minutes **Continuous rms output current allowing 44% overload for 1 minute every 5 minutes
I_{Hd}	Continuous rms output current allowing 50% overload for 1 minute every 5 minutes

Note: To achieve the rated motor power given in the table, the rated current of the drive must be higher than or equal to the rated motor current. The power ratings apply to most IEC 34 motors at the nominal voltage of the drive.

ABB recommends to select the drive, motor and gear combination for the required motion profile with the DriveSize dimensioning tool available from ABB.

High speed mode

The selection **High speed mode** of parameter 95.15 Special HW settings improves control performance at high output frequencies. ABB recommends it to be selected with output frequency of 120 Hz and above.

This table gives the drive module ratings for 120 Hz output frequency and the maximum output frequency when **High speed mode** in parameter 95.15 Special HW settings is enabled. With output frequencies lower than the maximum output frequency, the current derating is less than the value given in the table. Contact ABB for operation above the recommended maximum output frequency or for the output current derating with output frequencies above 120 Hz and below the maximum output frequency.

ACS880-04F-...	Deratings with selection High speed mode of parameter 95.15 Special HW settings									
	120 Hz output frequency					Maximum output frequency				
	Frequency	Nominal use		Light-duty use	Heavy-duty use	Maximum frequency	Nominal use		Light-duty use	Heavy-duty use
	f	I_2	P_n	I_{Ld}	I_{Hd}	f_{max}	I_2	P_n	I_{Ld}	I_{Hd}
	Hz	A	kW	A	A	Hz	A	kW	A	A
U_n = 400 V										
504A-3	120	504	250	485	361	500	390	200	370	290
584A-3	120	584	315	575	429	500	437	250	419	311
649A-3	120	649	355	634	477	500	485	250	466	346
725A-3	120	725	400	715	566	500	519	250	496	390
820A-3	120	820	450	810	625	500	587	315	562	431
880A-3	120	880	500	865	725*	500	630	355	600	500*
U_n = 500 V										
459A-5	120	459	315	450	330	500	357	250	345	265
502A-5	120	502	355	483	361	500	390	250	370	290
582A-5	120	582	400	573	414	500	400	250	380	298
634A-5	120	634	450	623	477	500	410	250	392	298
715A-5	120	715	500	705	566	500	462	315	428	362
820A-5	120	820	560	807	625	500	530	355	490	400
880A-5	120	880	630	857	697**	500	550	400	510	410
U_n = 690 V										
329A-7	120	329	315	320	255	375	232	200	222	157
369A-7	120	369	355	360	325	375	260	250	250	200
429A-7	120	429	400	420	360***	375	290	250	280	236***
470A-7	120	470	450	455	415	375	270	250	261	238
522A-7	120	522	500	505	455	375	300	250	290	262
590A-7	120	590	560	571	505	375	340	315	330	300

ACS880-04F-...	Deratings with selection High speed mode of parameter 95.15 Special HW settings									
	120 Hz output frequency					Maximum output frequency				
	Frequency	Nominal use		Light-duty use	Heavy-duty use	Maximum frequency	Nominal use		Light-duty use	Heavy-duty use
	f	I_2	P_n	I_{Ld}	I_{Hd}	f_{max}	I_2	P_n	I_{Ld}	I_{Hd}
	Hz	A	kW	A	A	Hz	A	kW	A	A
650A-7	120	650	630	630	571***	375	450	400	430	350***
721A-7	120	721	710	705	571***	375	450	400	430	350***
										3AXD00000588487

f	Output frequency
f_{max}	Maximum output frequency with High speed mode
U_n	Nominal voltage of the drive
I_2	Continuous rms output current. No overload capability at 40 °C (104 °F).
P_n	Typical motor power in no-overload use
I_{Ld}	Continuous rms output current allowing 10% overload for 1 minute every 5 minutes
I_{Hd}	Continuous rms output current allowing 50% overload for 1 minute every 5 minutes *Continuous rms output current allowing 40% overload for 1 minute every 5 minutes **Continuous rms output current allowing 45% overload for 1 minute every 5 minutes ***Continuous rms output current allowing 44% overload for 1 minute every 5 minutes

Fuses (IEC)

aR fuses by Cooper Bussmann for protection against short-circuit in the input power cable of the drive are listed below.

ACS880-04F...	Ultrarapid (aR) fuses per drive module						
	Min. short-circuit current	Input current	Fuse				
	A	A	A	A^2s	V	Type DIN 43653	Size
U_n = 400 V							
504A-3	4500	504	800	465000	690	170M6012	3
584A-3	6500	584	1000	945000	690	170M6014	3
649A-3	6500	649	1000	945000	690	170M6014	3
725A-3	9100	725	1250	1950000	690	170M6016	3
820A-3	11000	820	1600	3900000	690	170M6019	3
880A-3	11000	880	1600	3900000	690	170M6019	3
U_n = 500 V							
459A-5	3000	459	630	210000	690	170M6010	3
502A-5	4500	502	800	465000	690	170M6012	3
582A-5	6500	582	1000	945000	690	170M6014	3
634A-5	6500	634	1000	945000	690	170M6014	3
715A-5	9100	715	1250	1950000	690	170M6016	3
820A-5	11000	820	1600	3900000	690	170M6019	3
880A-5	11000	880	1600	3900000	690	170M6019	3
U_n = 690 V							
329A-7	3600	329	700	300000	690	170M6011	3
369A-7	5600	369	900	670000	690	170M6013	3
429A-7	6500	429	1000	945000	690	170M6014	3
470A-7	7800	470	1100	1300000	690	170M6015	3
522A-7	9100	522	1250	1950000	690	170M6016	3
590A-7	10200	590	1400	2450000	690	170M6017	3
650A-7	10500	650	1500	3100000	690	170M6018	3
721A-7	10500	721	1500	3100000	690	170M6018	3

Note: In multicable installations, install only one fuse per phase (not one fuse per conductor).

Fuses with higher current rating than the recommended ones must not be used. Fuses with lower current rating can be used.

Fuses from other manufacturers can be used if they agree with the ratings and the melting curve of the fuse does not exceed the melting curve of the fuse mentioned in the table.

Calculating the short-circuit current of the installation

Make sure that the short-circuit current of the installation is at least the value given in the fuse table.

The short-circuit current of the installation can be calculated as follows:

$$I_{k2\text{-}ph} = \frac{U}{2 \cdot \sqrt{R_c^2 + (Z_k + X_c)^2}}$$

where

$I_{k2\text{-}ph}$	Short-circuit current in symmetrical two-phase short-circuit
U	Network line-to-line voltage (V)
R_c	Cable resistance (ohm)
Z_k	$Z_k = z_k \cdot U_n^2 / S_n$ = transformer impedance (ohm)
z_k	Transformer impedance (%)
U_n	Transformer rated voltage (V)
S_n	Nominal apparent power of the transformer (kVA)
X_c	Cable reactance (ohm)

Calculation example

Drive:

- ACS880-04F-715A-5
- Supply voltage = 500 V

Transformer:

- rated power S_n = 5000 kVA
- rated voltage (drive supply voltage) U_N = 480 V
- transformer impedance z_k = 10%.

Supply cable:

- length = 170 m
- resistance/length = 0.125 ohm/km
- reactance/length = 0.074 ohm/km.

$$Z_k = z_k \cdot \frac{U_N^2}{S_N} = 0.1 \cdot \frac{(480\ \text{V})^2}{5000\ \text{kVA}} = 4.61\ \text{mohm}$$

$$R_c = 170\ \text{m} \cdot 0.125\ \frac{\text{ohm}}{\text{km}} = 21.25\ \text{mohm}$$

$$X_c = 170\ \text{m} \cdot 0.074\ \frac{\text{ohm}}{\text{km}} = 12.58\ \text{mohm}$$

$$I_{k2\text{-}ph} = \frac{500\ \text{V}}{2 \cdot \sqrt{(21.25\ \text{mohm})^2 + (4.61\ \text{mohm} + 12.58\ \text{mohm})^2}} = 9.15\ \text{kA}$$

The calculated short-circuit current 9.15 kA is higher than the minimum short-circuit current of the drive aR fuse type 170M6016 (9100 A). -> The 690 V aR fuse (170M6016) can be used.

Fuses (UL)

UL fuses for branch circuit protection per NEC per drive module are listed below. Obey the local regulations. The listed fuses do not include trip indicators by default.

ACS880-04F...	UL fuses per drive module					
	Input current (A)	Fuse				
		A	V	Manufacturer	UL class	Type
U_n = 480 V						
459A-5	459	600	600	Bussmann	T	JJS-600
502A-5	502	600	600	Bussmann	T	JJS-600
582A-5	582	800	600	Ferraz	L	A4BY800
634A-5	634	800	600	Ferraz	L	A4BY800
715A-5	715	1000	600	Ferraz	L	A4BY1000
820A-5	820	1000	600	Ferraz	L	A4BY1000
880A-5	880	1000	600	Ferraz	L	A4BY1000
U_n = 575 V						
329A-7	329	500	600	Bussmann	T	JJS-500
369A-7	369	500	600	Bussmann	T	JJS-500
429A-7	429	500	600	Bussmann	T	JJS-500
470A-7	470	600	600	Bussmann	T	JJS-600
522A-7	522	600	600	Bussmann	T	JJS-600
590A-7	590	800	600	Ferraz	L	A4BY800
650A-7	650	800	600	Ferraz	L	A4BY800
721A-7	721	800	600	Ferraz	L	A4BY800

1. Fuses are required as part of the installation, are not included in the base drive configuration and must be provided by others.
2. Fuses with a higher current rating than specified must not be used.
3. The UL listed fuses recommended by ABB are the required branch circuit protection per NEC.
4. The recommended size or smaller UL listed 248 fast acting, time delay, or high speed fuses must be used to maintain the UL listing of the drive. Additional protection can be used. Refer to local codes and regulations.
5. A fuse of a different class can be used at the high fault rating where the I_{peak} and I^2t of the new fuse is not greater than that of the specified fuse.
6. UL listed 248 fast acting, time delay, or high speed fuses from other manufacturers can be used if they meet the same class and rating requirements specified in the rules above.
7. When you install a drive, always obey ABB installation instructions, NEC requirements and local codes.
8. Alternative fuses can be used if they meet certain characteristics. For permitted fuses, see Branch Circuit Protection for ABB drives manual supplement (3AXD50000645015).

In multicable installations, install only one fuse per phase (not one fuse per conductor).

Circuit breakers

Circuit breakers must not be used without fuses.

Dimensions, weights and free space requirements

Standard drive module configuration (including flange and shrouds)								
Frame size	Height[1)]		Width		Depth[2)]		Weight*	
	mm	in	mm	in	mm	in	kg	lb
R11	1733	68.23	620	24.41	477	18.78	224	494

Optional selection +0B051+0H371 (without shrouds, full-size output power cable connection terminals but with flange)								
Frame size	Height[3)]		Width		Depth[4)]		Weight*	
	mm	in	mm	in	mm	in	kg	lb
R11	1647	64.84	620	24.41	405	15.94	219	483

Optional selection +0B051+0H371 (without shrouds, full-size output power cable connection terminals but with flange). Dimensions are given without flange for cabinet installation reference.								
Frame size	Height[5)]		Width		Depth[4)]		Weight*	
	mm	in	mm	in	mm	in	kg	lb
R11	1525	60.05	535	21.06	405	15.94	219	483

Optional selection +0B051+E208+0H371+C217 (without shrouds, full-size output power cable connection terminals and with wall mounting kit instead of flange)								
Frame size	Height[3)]		Width		Depth[4)]		Weight*	
	mm	in	mm	in	mm	in	kg	lb
R11	1647	64.84	620	24.41	405	15.94	211	465

[1)] Height of standard drive module with hood: 1930 mm (75.98 in)

[2)] Depth of standard drive module with hood: 556 mm (21.89 in)

[3)] Height with optional selection +0B051+0H371, flange (or wall mounting kit) and hood: 1877 mm (73.90 in).

[4)] Depth with optional selection +0B051+0H371 and hood: 479 mm (18.87 in)

[5)] Height with optional selection +0B051+0H371 and hood, but without flange: 1755 mm (69.09 in). The height is the same with the wall mounting kit instead of flange.

* approximate (depends on the selected options)

Effect of optional selections on drive weight												
Frame size	+E208		+D150		+H356		+0H371		+H370		+0B051	
	kg	lb	kg	lb	kg	lb	kg	lb	kg	lb	kg	lb
R11	3	7	9	20	2	4	-2.9	-6	2.9	6	-1.5	-3

For the free space requirements, refer to section Required free space (page 41).

Package dimensions

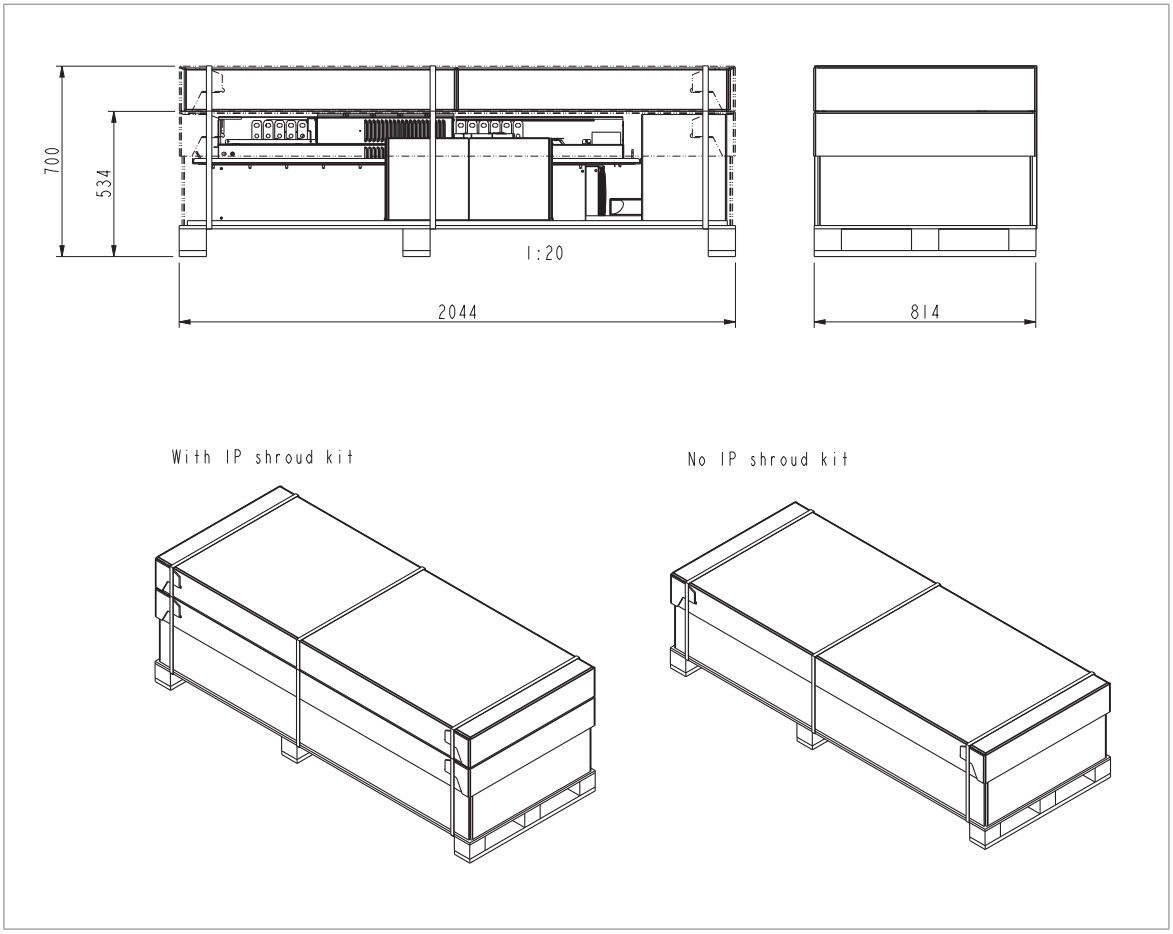

Package dimensions without IP shroud kit.

Losses, cooling data and noise

ACS880-04F...	Frame size	Air flow		Heat dissipation [1]			Noise
		Heatsink	Front	Heatsink	Front	Total	
		m^3/h	m^3/h	W	W	W	dB(A)
U_n = 400 V							
504A-3	R11	1400	120	4074	522	4595	75
584A-3	R11	1400	120	5135	594	5729	75
649A-3	R11	1400	120	6014	657	6671	75
725A-3	R11	1400	120	7162	742	7904	75
820A-3	R11	1400	120	8701	859	9561	75
880A-3	R11	1400	120	9813	946	10759	75
U_n = 500 V							
459A-5	R11	1400	120	3710	492	4201	75
502A-5	R11	1400	120	4185	523	4708	75
582A-5	R11	1400	120	5184	590	5774	75
634A-5	R11	1400	120	5845	637	6482	75
715A-5	R11	1400	120	7112	728	7840	75
820A-5	R11	1400	120	8796	855	9650	75
880A-5	R11	1400	120	9818	934	10752	75
U_n = 690 V							
329A-7	R11	1400	120	2732	414	3146	75
369A-7	R11	1400	120	3162	436	3598	75
429A-7	R11	1400	120	3907	475	4382	75
470A-7	R11	1400	120	4601	507	5107	75
522A-7	R11	1400	120	5327	548	5875	75
590A-7	R11	1400	120	6386	609	6995	75
650A-7	R11	1400	120	7482	670	8152	75
721A-7	R11	1400	120	8671	747	9417	75

[1] Typical drive losses when it operates at 90% of the motor nominal frequency and 100% of the drive nominal output current (calculated according to IEC61800-9-2).

The cooling air temperature rises 30 degrees Celsius when it goes through the drive module if the temperature of the input cooling air is 40 degrees Celsius.

Typical power cables

The table below gives typical copper and aluminum cable types with concentric copper shield for the drive modules with nominal current. See also section Terminal and entry data for the power cables (page 144).

ACS880-04F...	IEC[1]		US[2]	
	Cu cable type	Al cable type	Cu cable type	Al cable type
	mm²	mm²	AWG/kcmil	AWG/kcmil
U_n = 400 V				
504A-3	3×(3×95)	3×(3×150)	2×500 MCM or 3×250 MCM	2×700 MCM or 3×350 MCM
584A-3	3×(3×120)	3×(3×185)	2×600 MCM or 3×300 MCM	3×400 MCM or 4×250 MCM
649A-3	3×(3×150)	3×(3×240)	2×700 MCM or 3×350 MCM	3×400 MCM or 4×250 MCM
725A-3	3×(3×185)	4×(3×185)	3×500 MCM or 4×300 MCM	3×500 MCM or 4×300 MCM
820A-3	3×(3×240)	4×(3×240)	3×600 MCM or 4×400 MCM	3×700 MCM or 4×500 MCM
880A-3	3×(3×240)	4×(3×240)	3×600 MCM or 4×400 MCM	4×500 MCM
U_n = 500 V				
459A-5	3×(3×95)	3×(3×150)	2×400 MCM or 3×4/0	2×600 MCM or 3×300 MCM
502A-5	3×(3×95)	3×(3×150)	2×500 MCM or 3×250 MCM	2×700 MCM or 3×350 MCM
582A-5	3×(3×120)	3×(3×185)	2×600 MCM or 3×300 MCM	3×500 MCM or 4×300 MCM
6354-5	3×(3×150)	3×(3×240)	2×700 MCM or 3×350 MCM	3×600 MCM or 4×400 MCM
715A-5	3×(3×185)	4×(3×185)	3×500 MCM or 4×300 MCM	3×600 MCM or 4×400 MCM
820A-5	3×(3×240)	4×(3×240)	3×600 MCM or 4×400 MCM	4×500 MCM
880A-5	3×(3×240)	4×(3×240)	3×600 MCM or 4×400 MCM	4×500 MCM
U_n = 690 V				
329A-7	2×(3×120)	3×(3×120)	2×250 MCM or 3×2/0	2×350 MCM or 3×4/0
369A-7	2×(3×120)	3×(3×120)	2×300 MCM or 3×3/0	2×400 MCM or 3×4/0
429A-7	2×(3×95)	2×(3×120)	2×350 MCM or 3×4/0	2×500 MCM or 3×250 MCM
470A-7	3×(3×95)	3×(3×150)	2×400 MCM or 3×4/0	2×600 MCM or 3×300 MCM
522A-7	3×(3×120)	3×(3×185)	2×500 MCM or 3×250 MCM	2×700 MCM or 3×350 MCM
590A-7	3×(3×150)	3×(3×185)	2×600 MCM or 3×300 MCM	3×500 MCM or 4×300 MCM
650A-7	3×(3×150)	3×(3×240)	2×700 MCM or 3×350 MCM	3×500 MCM or 4×300 MCM
721A-7	3×(3×185)	4×(3×185)	3×500 MCM or 4×300 MCM	3×600 MCM or 4×400 MCM

1) The cable selection is based on max. 9 cables laid on a cable ladder side by side, three ladder type trays one on top of the other, ambient temperature 30 °C (86 °F) PVC insulation, surface temperature 70 °C (158 °F) (EN 60204-1 and IEC 60364-5-52). For other conditions, select the cables according to local safety regulations, appropriate input voltage and the load current of the drive.

2) The cable selection is based on NEC Table 310-16 for copper wires, 75 °C (167 °F) wire insulation at 40 °C (104 °F) ambient temperature. Not more than three current-carrying conductors in raceway or cable or earth (directly buried). For other conditions, dimension the cables according to local safety regulations, appropriate input voltage and the load current of the drive.

Temperature: For IEC, select a cable rated for at least 70 °C maximum permissible temperature of conductor in continuous use. For North America, power cables must be rated for 75 °C (167 °F) or higher.

Voltage: 600 V AC cable is accepted for up to 500 V AC. 750 V AC cable is accepted for up to 600 V AC. 1000 V AC cable is accepted for up to 690 V AC.

Terminal and entry data for the power cables

The maximum accepted cable size is 4×(3×240) mm^2 or 4×(3×500 MCM). Screw size for connecting busbars to the drive module input and output busbars: M12, tightening torque 50…75 N·m (37…55 lbf·ft).

Units without full-size output cable connection terminals and with a common mode filter (+E208)

It is possible to use the maximum cable size (4×[3×240] mm^2 or 4×[3×500 MCM]) only with special cable lugs and additional insulation. For more information, contact your local ABB representative.

Terminal data for the control cables

See section Default control connection diagram of the drive control unit (ZCU) (page 101)

Electrical power network specification

Voltage (U_1)	ACS880-04F-xxxx-3 drives: 380…415 VAC 3-phase +10%…-15%. This is indicated in the type designation label as typical input voltage level 3~400 V AC. ACS880-04F-xxxx-5 drives: 380…500 V AC 3-phase +10%…-15%. This is indicated in the type designation label as typical input voltage levels 3~400/480/500 V AC. ACS880-04F-xxxx-7 drives: 525…690 V AC 3-phase +10%…-15%. This is indicated in the type designation label as typical input voltage levels 3~525/600/690 V AC.
Network type	TN (grounded) and IT (ungrounded) systems
Rated conditional short-circuit current I_{cc} (IEC 61800-5-1)	Maximum allowable prospective short-circuit current is 65 kA when protected by the fuses given in the fuse table.
Maximum prospective short-circuit current rating (SCCR) (UL 61800-5-1, CSA C22.2 No. 274-17)	The drive is suitable for use on a circuit capable of delivering not more than 100 kA rms symmetrical amperes at 600 V maximum when protected by the fuses given in the fuse table.
Frequency (f_1)	50/60 Hz. Variation ±5% of nominal frequency.
Imbalance	Max. ± 3% of nominal phase to phase input voltage
Fundamental power factor (cos phi$_1$)	0.98 (at nominal load)

Motor connection data

Motor types	Asynchronous AC induction motors, permanent magnet motors, AC induction servomotors and ABB synchronous reluctance motors (SynRM motors).
Voltage (U_2)	This is indicated in the type designation label as typical output voltage level 3~0…U_1.
Frequency (f_2)	0…598 Hz For drives with du/dt filter: 200 Hz For drives with sine filter: 120 Hz

Frequency resolution	0.01 Hz
Current	See section Electrical ratings (page 129).
Switching frequency	3 kHz (typically)
Maximum recommended motor cable length	DTC control: 500 m (1640 ft) Scalar control: 500 m (1640 ft) **Note:** With motor cables longer than 100 m (328 ft), the EMC Directive requirements may not be fulfilled. **Note:** Long cables cause a motor voltage decrease which limits the available motor power. The decrease depends on the motor cable length and characteristics. Contact ABB for more information. Note that a sine filter (optional) at the drive output also causes a voltage decrease.
Minimum recommended motor cable length	For drive modules without d*u*/d*t* filter: 2 m (7 ft) from each drive module to the motor or 4 m (13 ft) between the drive modules, possible only with special precautions, see section d*u*/d*t* filters (page 195). The motor cabling must be symmetrical.

Brake resistor data

See section Ratings (page 193).

d*u*/d*t* and sine filters

See section Filters (page 195).

DC connection data

Drive type	I_{DC} (A)	Capacitance (mF)
U_n = 400 V		
ACS880-04F-504A-3	640	14.0
ACS880-04F-584A-3	714	14.0
ACS880-04F-649A-3	870	14.0
ACS880-04F-725A-3	909	21.0
ACS880-04F-820A-3	1033	21.0
ACS880-04F-880A-3	1120	21.0
U_n = 500 V		
ACS880-04F-459A-5	487	14.0
ACS880-04F-502A-5	640	14.0
ACS880-04F-582A-5	714	14.0
ACS880-04F-634A-5	870	14.0
ACS880-04F-715A-5	906	21.0
ACS880-04F-820A-5	1033	21.0
ACS880-04F-880A-5	1120	21.0
U_n = 690 V		
ACS880-04F-329A-7	428	4.7
ACS880-04F-369A-7	480	4.7
ACS880-04F-429A-7	558	4.7
ACS880-04F-470A-7	611	9.3
ACS880-04F-522A-7	679	9.3
ACS880-04F-590A-7	767	9.3
ACS880-04F-650A-7	845	9.3
ACS880-04F-721A-7	937	9.3

Control panel type

ACS-AP-W assistant control panel with Bluetooth connection.

Efficiency

Approximately 98% at nominal power level.

The efficiency is not calculated according to the ecodesign standard IEC 61800-9-2.

Energy efficiency data (ecodesign)

Energy efficiency data according to IEC 61800-9-2 is available from the ecodesign tool (https://ecodesign.drivesmotors.abb.com). The drive complies with the IE efficiency class IE2.

Protection classes

Degrees of protection (IEC/EN 60529)	IP20 (standard) IP00 (option +0B051) Heatsink: IP55
Enclosure types (UL 50/50E)	UL Open Type Heatsink: UL Type 12
Overvoltage category (IEC/EN 60664-1)	III
Protective class (IEC/EN 61800-5-1)	I

Ambient conditions

Environmental limits for the drive, including installed options, are given below. The drive is to be used in a heated, indoor, controlled environment or the heatsink can be placed outdoors when it is protected according to these limitations.

	Operation **(installed for stationary use)**	**Storage** **(in the protective package)**	**Transportation** **(in the protective package)**
Installation site altitude	For TN and TT neutral-grounded network systems and IT non-corner-grounded network systems: 0 to 4000 m (13123 ft) above sea level For corner-grounded network systems: 0 to 2000 m (6561 ft) above sea level Above 1000 m (3281 ft): see section When is derating necessary (page 131)	-	-
Surrounding air temperature	-15…+55 °C (5…131 °F). No frost allowed. See section When is derating necessary (page 131)	-40… 70 °C (-40…+158 °F)	-40…+70 °C (-40…+158 °F)
Relative humidity	5…95%	5…95%	5…95%
	No condensation allowed. Maximum allowed relative humidity is 60%[1)] in the presence of corrosive gases at level C4.		
Contamination levels	IEC60721-3-3:2019, ISO9223 ANSI-ISA 71.04	IEC 60721-3-1:1997	IEC 60721-3-2:1997
Chemical gases	**IP00, IP20 and IP21 drives:** IEC Class C3 ANSI-ISA 71.04 Class G2	Class 1C2	Class 2C2
	IP55 drives: IEC Class C4 ANSI-ISA 71.04 G3/GX up to 2300 Å/30d corrosivity		
	Drives with +P968 corrosion resistance variant: IEC Class C5/CX ANSI-ISA 71.04 GX up to 8000 Å/30d corrosivity		
	Conformal coated circuit boards as standard on all drives		
Solid particles	Class 3S6. No conductive dust allowed.	Class 1S3 if the package is Class 2S2, otherwise Class 1S2	Class 2S2

	Operation (installed for stationary use)	Storage (in the protective package)	Transportation (in the protective package)
Pollution degree IEC/EN 60664-1	2		
Atmospheric pressure	70…106 kPa (0.7 … 1.05 atmospheres)	70…106 kPa (0.7 … 1.05 atmospheres)	60…106 kPa (0.6 … 1.05 atmospheres)
Vibration IEC 60068-2-6:2007, EN 60068-2-6:2008	Max. 0.1 mm (0.004 in) (10…57 Hz), max. 10 m/s^2 (33 ft/s^2) (57…150 Hz) sinusoidal	Max. 1 mm (0.04 in) (5 … 13.2 Hz), max. 7 m/s^2 (23 ft/s^2) (13.2…100 Hz) sinusoidal	Max. 3.5 mm (0.14 in) (2…9 Hz), max. 15 m/s^2 (49 ft/s^2) (9…200 Hz) sinusoidal
Shock IEC 60068-2-27:2008, EN 60068-2-27:2009	Not allowed	With packing max. 100 m/s^2 (330 ft/s^2), 11 ms	With packing max. 100 m/s^2 (330 ft/s^2), 11 ms
Free fall	Not allowed	100 mm (4 in) for weight over 100 kg (220 lb)	100 mm (4 in) for weight over 100 kg (220 lb)

[1] Contact ABB for higher humidity levels than 60% in the presence of corrosive gases.

Storage conditions

Store the drive in humidity controlled enclosed environments. Keep the drive in its package.

Colors

RAL 9002

Materials

Drive

See Recycling instructions and environmental information for ACS880-04, ACS880-04F, ACS880-14, ACS880-34, ACS580-04, ACH580-04, ACH580-34, ACQ580-04 and ACQ580-34 drives (3AXD50000137688 [English]).

Package materials for module products

This is a complete list of the package materials. The materials vary depending on the frame size (packages do not contain all materials listed below).

- Cardboard (heavy duty quality with wet strength glue in large modules)
- Molded pulp
- Plywood
- Wood
- PP (strapping)
- EPP (foam)
- PE (plastic bag and/or VCI film)
- Metal (fixing clamps, screws).

Package materials for options, accessories and spare parts

- Cardboard
- Kraft paper
- PP (straps)
- PE (film, bubble wrap)
- Plywood, wood (only for heavy components)

The materials vary according to the item type, size and shape. The typical package is a cardboard box with paper filling or bubble wrap. ESD-safe packing materials are used for printed circuit boards and similar items.

Materials of manuals

Printed product manuals are made of recyclable paper. Product manuals are available on the Internet.

Disposal

The main parts of the drive can be recycled to preserve natural resources and energy. Product parts and materials should be dismantled and separated.

Generally all metals, such as steel, aluminum, copper and its alloys, and precious metals can be recycled as material. Plastics, rubber, cardboard and other packaging material can be used in energy recovery.

Printed circuit boards and DC capacitors need selective treatment according to IEC 62635 guidelines.

To aid recycling, most plastic parts are marked with an appropriate identification code. In addition, components containing Substances of Very High Concern (SVHCs) are listed in the European Chemicals Agency SCIP database. SCIP is the database for information on Substances of Concern in articles as such or in complex objects (Products) established under the Waste Framework Directive (2008/98/EC). For more information, contact your local ABB distributor or consult the European Chemicals Agency SCIP database to find out which SVHCs are used in the drive and where the components are located.

Contact your local ABB distributor for more information on environmental aspects. End of life treatment must follow international and national regulations.

For more information on ABB end of life services, refer to new.abb.com/service/end-of-life-services.

Applicable standards

The drive complies with the following standards.

EN 61800-5-1:2007 + A1:2017 + A11:2021 IEC 61800-5-1:2007 + Amd1:2016	Adjustable speed electrical power drive systems. Part 5-1: Safety requirements – electrical, thermal and energy

EN 60204-1:2006 +A1:2010	Safety of machinery. Electrical equipment of machines. Part 1: General requirements. Provisions for compliance: The final assembler of the machine is responsible for installing • emergency-stop device • supply disconnecting device • IP00 drive module into a cabinet.
IEC 60529:1989 + A1:1999 + A2:2013 EN 60529:1991 + A1:2000 + A2:2013	Degrees of protection provided by enclosures (IP code)
IEC 61800-3:2004 + A1:2011 EN 61800-3:2004 + A1:2012	Adjustable speed electrical power drive systems. Part 3: EMC requirements and specific test methods
UL 61800-5-1 First edition	Standard for Adjustable Speed Electrical Power Drive Systems – Part 5-1: Safety Requirements – Electrical, Thermal and Energy
CSA C22.2 No. 0-10	General Requirements - Canadian Electrical Code, Part II
CSA C22.2 No. 274-17	Adjustable speed drives

Markings

These markings are attached to the drive:

CE	CE mark Product complies with the applicable European Union legislation. For fulfilling the EMC requirements, see the additional information concerning the drive EMC compliance (IEC/EN 61800-3).
c UL us LISTED	UL Listed mark for USA and Canada Product has been tested and evaluated against the relevant North American standards by the Underwriters Laboratories. Valid with rated voltages up to 600 V.
TÜV NORD Safety Approved	TÜV Safety Approved mark (functional safety) Product contains Safe torque off and possibly other (optional) safety functions which are certified by TÜV according to the relevant functional safety standards. Applicable to drives and inverters; not applicable to supply, brake or DC/DC converter units or modules.
CSA c us	CSA certification mark for USA and Canada Product has been tested and evaluated against the relevant North American standards by the CSA Group. Valid with rated voltages up to 600 V.
EAC	EAC (Eurasian Conformity) mark Product complies with the technical regulations of the Eurasian Customs Union. EAC mark is required in Russia, Belarus and Kazakhstan.

	Electronic Information Products (EIP) symbol including an Environment Friendly Use Period (EFUP). Product is compliant with the People's Republic of China Electronic Industry Standard (SJ/T 11364-2014) about hazardous substances. The EFUP is 20 years. China RoHS II Declaration of Conformity is available from https://library.abb.com.

	RCM mark Product complies with Australian and New Zealand requirements specific to EMC, telecommunications and electrical safety. For fulfilling the EMC requirements, see the additional information concerning the drive EMC compliance (IEC/EN 61800-3).

	WEEE mark At the end of life the product should enter the recycling system at an appropriate collection point and not placed in the normal waste stream.

UK CA	UKCA (UK Conformity Assessed) mark Product complies with the applicable United Kingdom's legislation (Statutory Instruments). Marking is required for products being placed on the market in Great Britain (England, Wales and Scotland).

EMC compliance (IEC/EN 61800-3)

Definitions

EMC stands for Electromagnetic Compatibility. It is the ability of electrical/electronic equipment to operate without problems within an electromagnetic environment. Likewise, the equipment must not disturb or interfere with any other product or system within its locality.

First environment includes establishments connected to a low-voltage network which supplies buildings used for domestic purposes.

Second environment includes establishments connected to a network not supplying domestic premises.

Drive of category C1: drive of rated voltage less than 1000 V and intended for use in the first environment.

Drive of category C2: drive of rated voltage less than 1000 V and intended to be installed and started up only by a professional when used in the first environment.

Note: A professional is a person or organization having necessary skills in installing and/or starting up power drive systems, including their EMC aspects.

Drive of category C3: drive of rated voltage less than 1000 V and intended for use in the second environment and not intended for use in the first environment.

Drive of category C4: drive of rated voltage equal to or above 1000 V, or rated current equal to or above 400 A, or intended for use in complex systems in the second environment.

Category C3

The drive complies with the standard with the following provisions:

1. The drive is equipped with EMC filter (+E200 or +E201) and common mode filter (+E208).
2. The motor and control cables are selected as specified in the hardware manual.
3. The drive is installed according to the instructions given in the hardware manual.
4. Maximum motor cable length is 100 m (328 ft).
5. The value of parameter 97.01 is set to 2 kHz or less.

NOTICE A drive of category C3 is not intended to be used on a low-voltage public network which supplies domestic premises. Radio frequency interference is expected if the drive is used on such a network.

Category C4

The drive complies with the C4 category with these provisions:

1. It is made sure that no excessive emission is propagated to neighboring low-voltage networks. In some cases, the natural suppression in transformers and cables is sufficient. If in doubt, a supply transformer with static screening between the primary and secondary windings can be used.

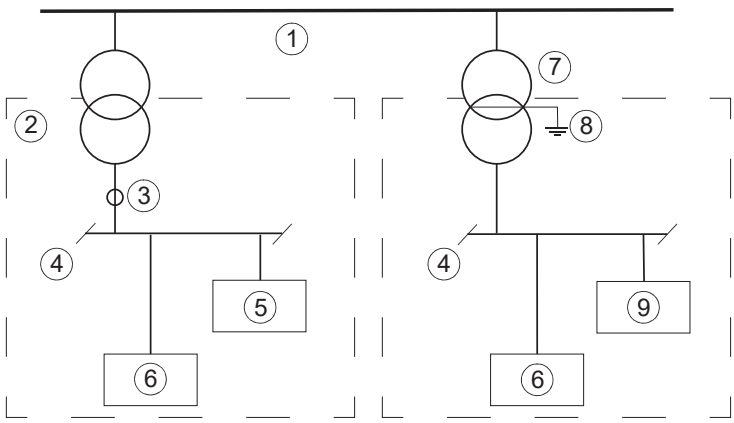

1	Medium voltage network	6	Equipment
2	Neighboring network	7	Supply transformer
3	Point of measurement	8	Static screen
4	Low voltage	9	Drive
5	Equipment (victim)	-	-

2. An EMC plan for preventing disturbances is drawn up for the installation. A template is available in Technical guide No. 3 EMC compliant installation and configuration for a power drive system (3AFE61348280 [English]).
3. The motor and control cables are selected, and routed according to the electrical planning guidelines of the drive. The EMC recommendations are obeyed.
4. The drive is installed according to its installation instructions. The EMC recommendations are obeyed.

NOTICE A drive of category C4 is not intended to be used on a low-voltage public network which supplies domestic premises. Radio frequency interference is expected if the drive is used on such a network.

UL checklist

WARNING Operation of this drive requires detailed installation and operation instructions provided in the hardware and software manuals. The manuals are provided in electronic format, in the drive package or on the Internet. Keep the manuals with the drive at all times. Hard copies of the manuals can be ordered through the manufacturer.

- Make sure that the drive type designation label includes the applicable marking.
- **DANGER - Risk of electric shock.** After disconnecting the input power, always wait for 5 minutes to let the intermediate circuit capacitors discharge before you start working on the drive, motor or motor cable.
- The drive is to be used in a heated, indoor controlled environment. The drive must be installed in clean air according to the enclosure classification. Cooling air must be clean, free from corrosive materials and electrically conductive dust.
- The maximum surrounding air temperature is 40 °C at rated output current. The output current is derated for 40…55 °C.
- The drive is suitable for use in a circuit capable of delivering not more than 100 kA rms symmetrical amperes, 600 V maximum when protected by the UL fuses given elsewhere in this chapter.
- The cables located within the motor circuit must be rated for at least 75 °C in UL-compliant installations.
- The input cable must be protected with fuses. These protective devices provide branch circuit protection in accordance with the national regulations (National Electrical Code (NEC) or Canadian Electrical Code). Obey also any other applicable local or provincial codes.

  WARNING The opening of the branch-circuit protective device may be an indication that a fault current has been interrupted. To reduce the risk of fire or electric shock, current-carrying parts and other components of the device should be examined and replaced if damaged.

- The integral solid state short circuit protection of the drive does not provide branch circuit protection. Branch circuit protection must be provided in accordance with the National Electrical Code and any additional local codes.
- The drive provides motor overload protection. The protection is not enabled when the drive leaves the ABB factory. For enabling the protection, see the firmware manual.
- The drive overvoltage category according to IEC 60664-1 is III.

Disclaimers

Generic disclaimer

The manufacturer shall have no obligation with respect to any product which (i) has been improperly repaired or altered; (ii) has been subjected to misuse, negligence or accident; (iii) has been used in a manner contrary to the manufacturer's instructions; or (iv) has failed as a result of ordinary wear and tear.

Cyber security disclaimer

This product is designed to be connected to and to communicate information and data via a network interface. It is Customer's sole responsibility to provide and continuously ensure a secure connection between the product and Customer network or any other network (as the case may be). Customer shall establish and maintain any appropriate measures (such as but not limited to the installation of firewalls, application of authentication measures, encryption of data, installation of anti-virus programs, etc.) to protect the product, the network, its system and the interface against any kind of security breaches, unauthorized access, interference, intrusion, leakage and/or theft of data or information.

ABB and its affiliates are not liable for damages and/or losses related to such security breaches, any unauthorized access, interference, intrusion, leakage and/or theft of data or information.

Declarations of conformity

Link to Declaration of conformity according to EU Machinery Directive 2006/42/EU (3AXD10000099646)

Link to Declaration of conformity according to UK Supply of Machinery (Safety) Regulations 2008 (3AXD10001329538)

Link to Declaration of China RoHS II Conformity (3AXD10001497397)

15

Dimension drawings

Contents of this chapter

This chapter contains dimension drawings of the drive modules.

Standard configuration – IP20 (UL Type Open)

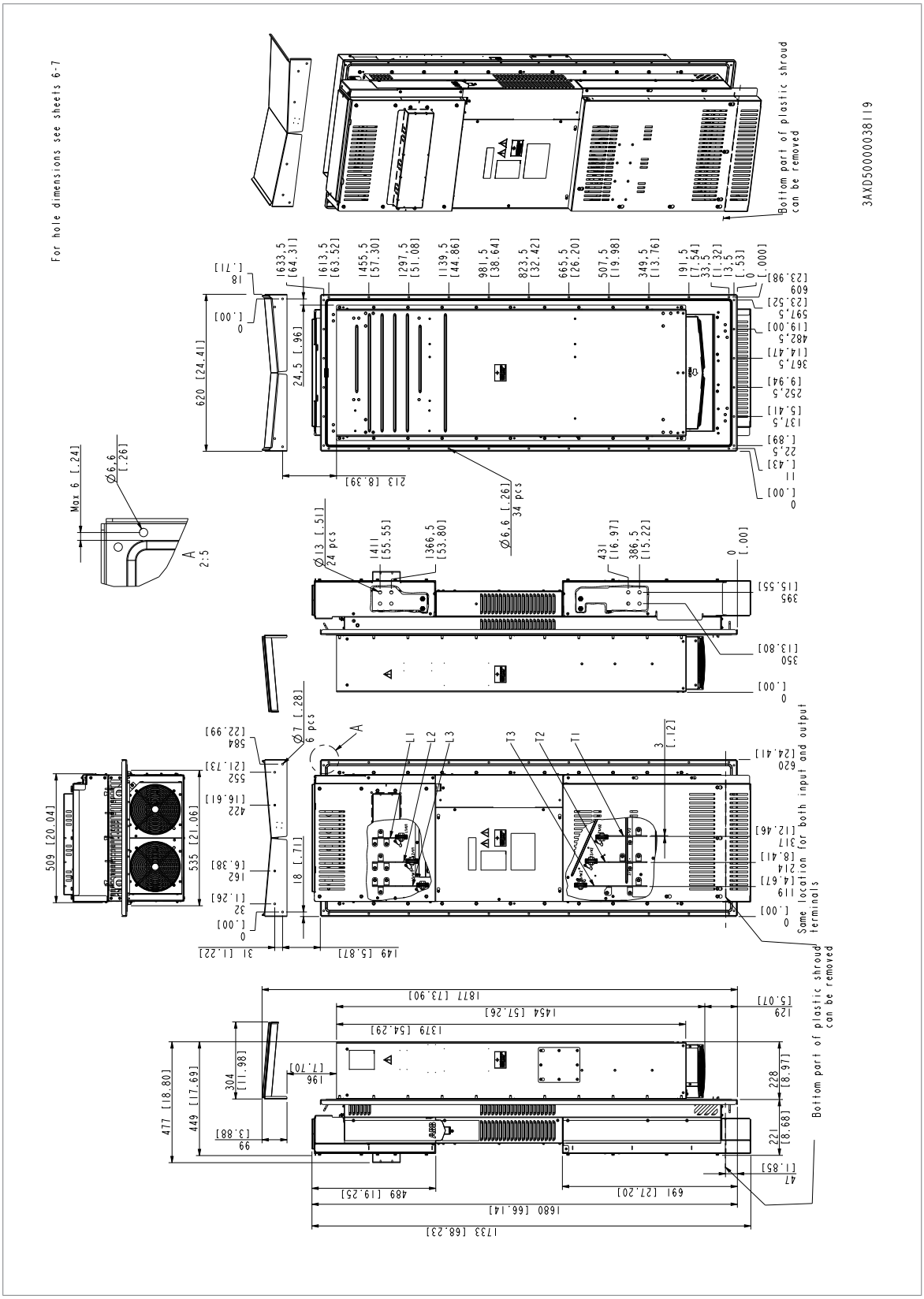

Drive module with options +E208 and +H370 – IP20 (UL Type Open)

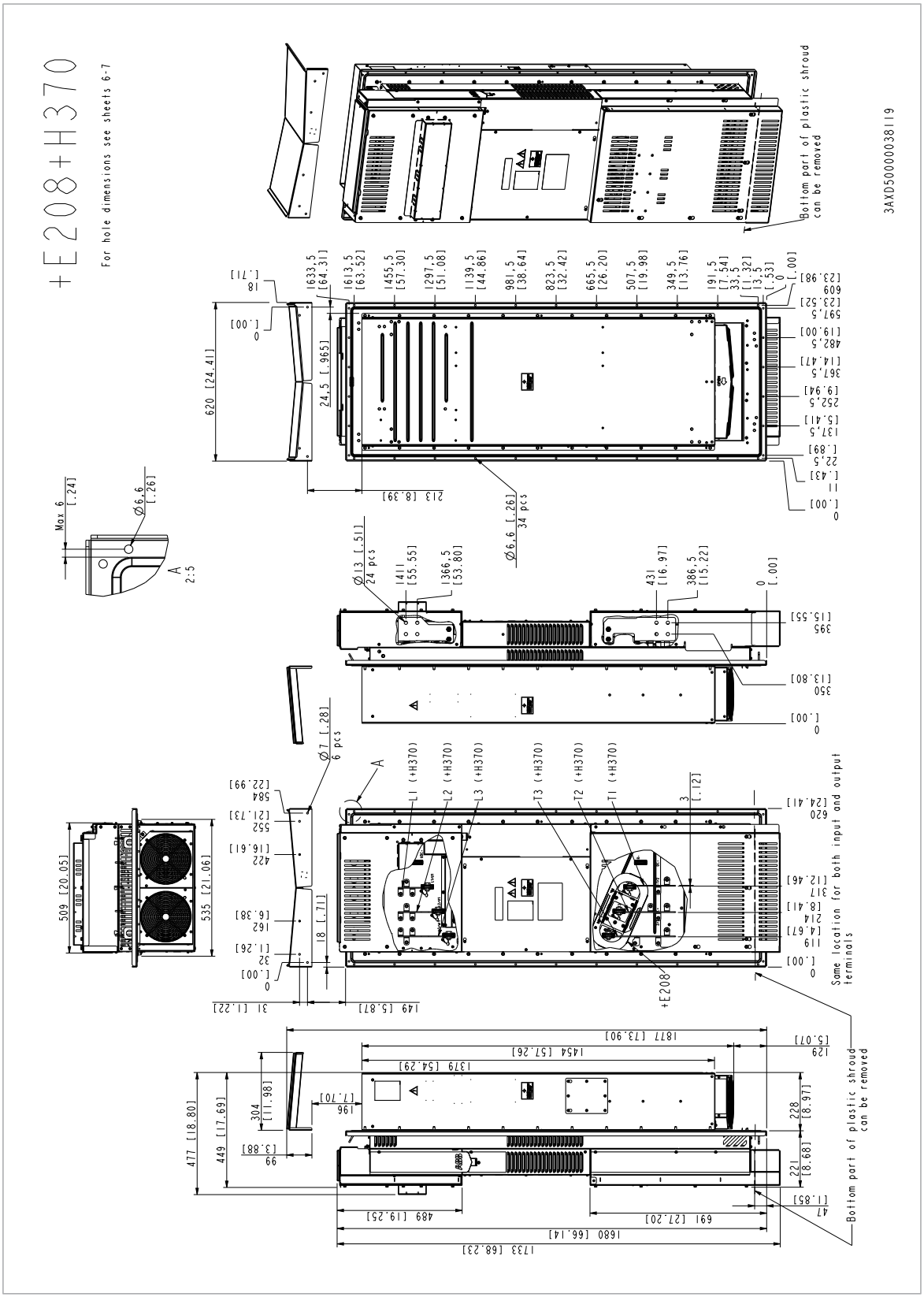

Drive module with options +0B051+E208+0H371 – IP00 (UL Type Open)

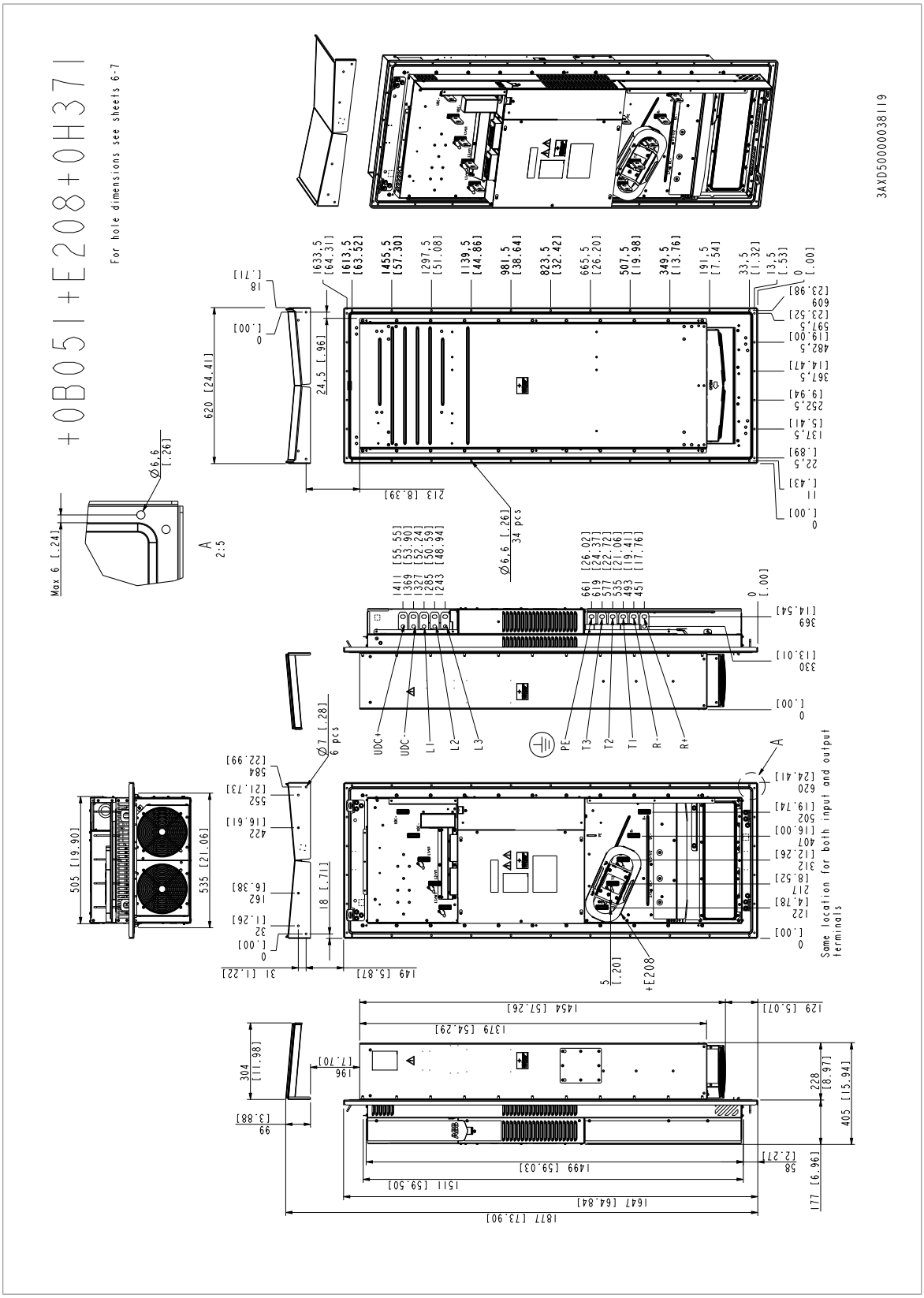

Drive module with options +0B051+E208+0H371+C217 – IP00 (UL Type Open)

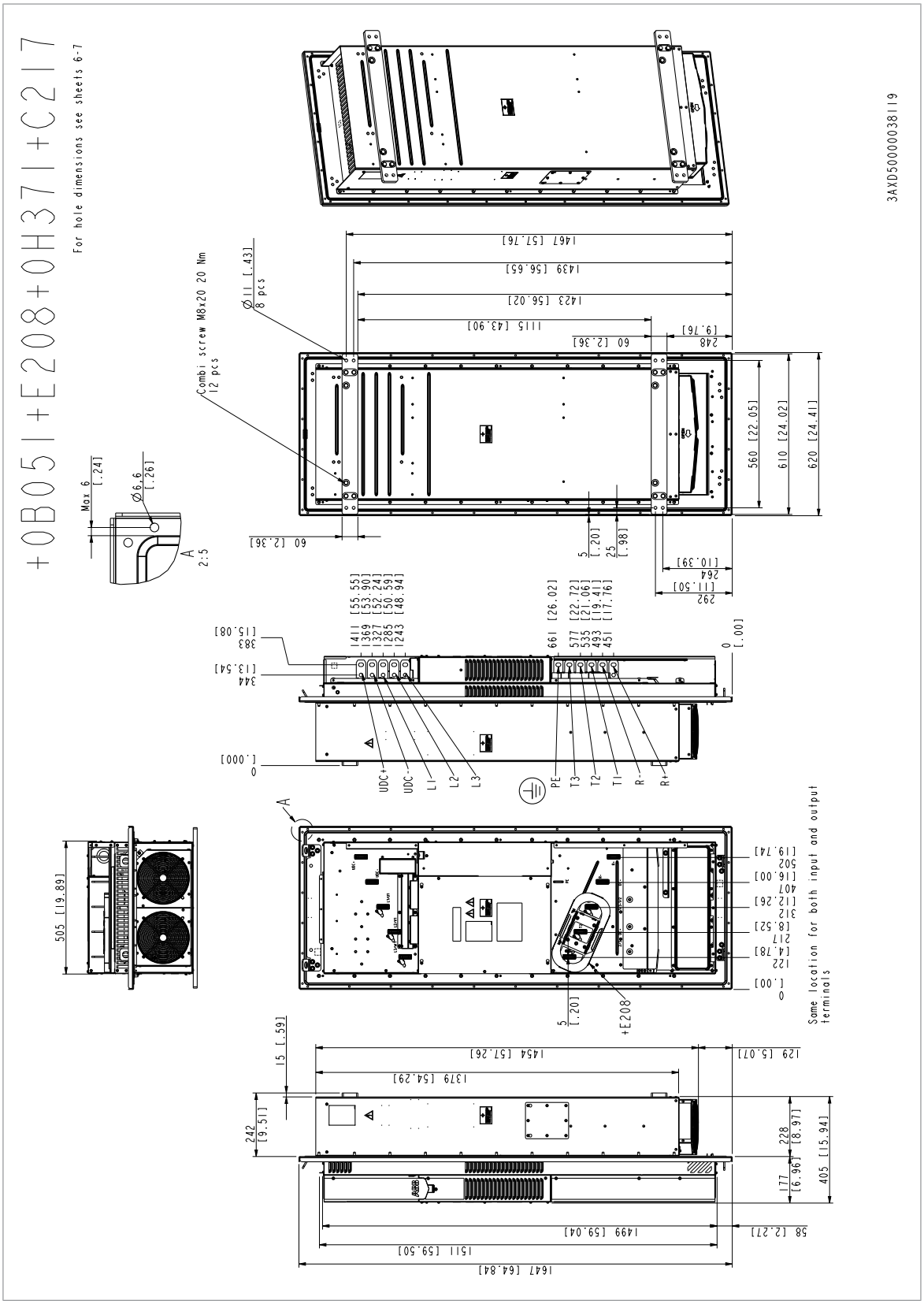

Drive module with options +0B051+0H371 – IP00 (UL Type Open)

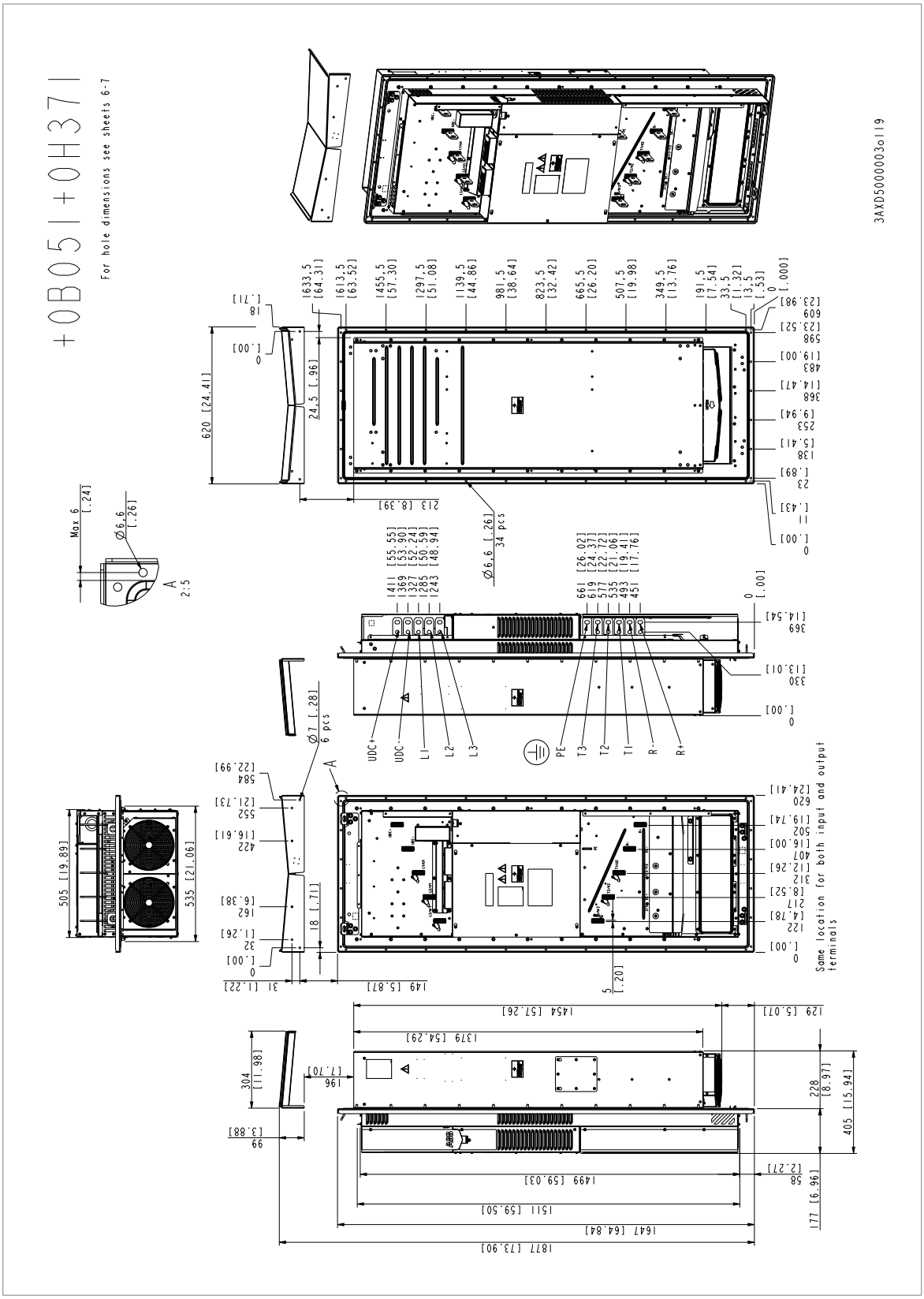

Terminal busbars

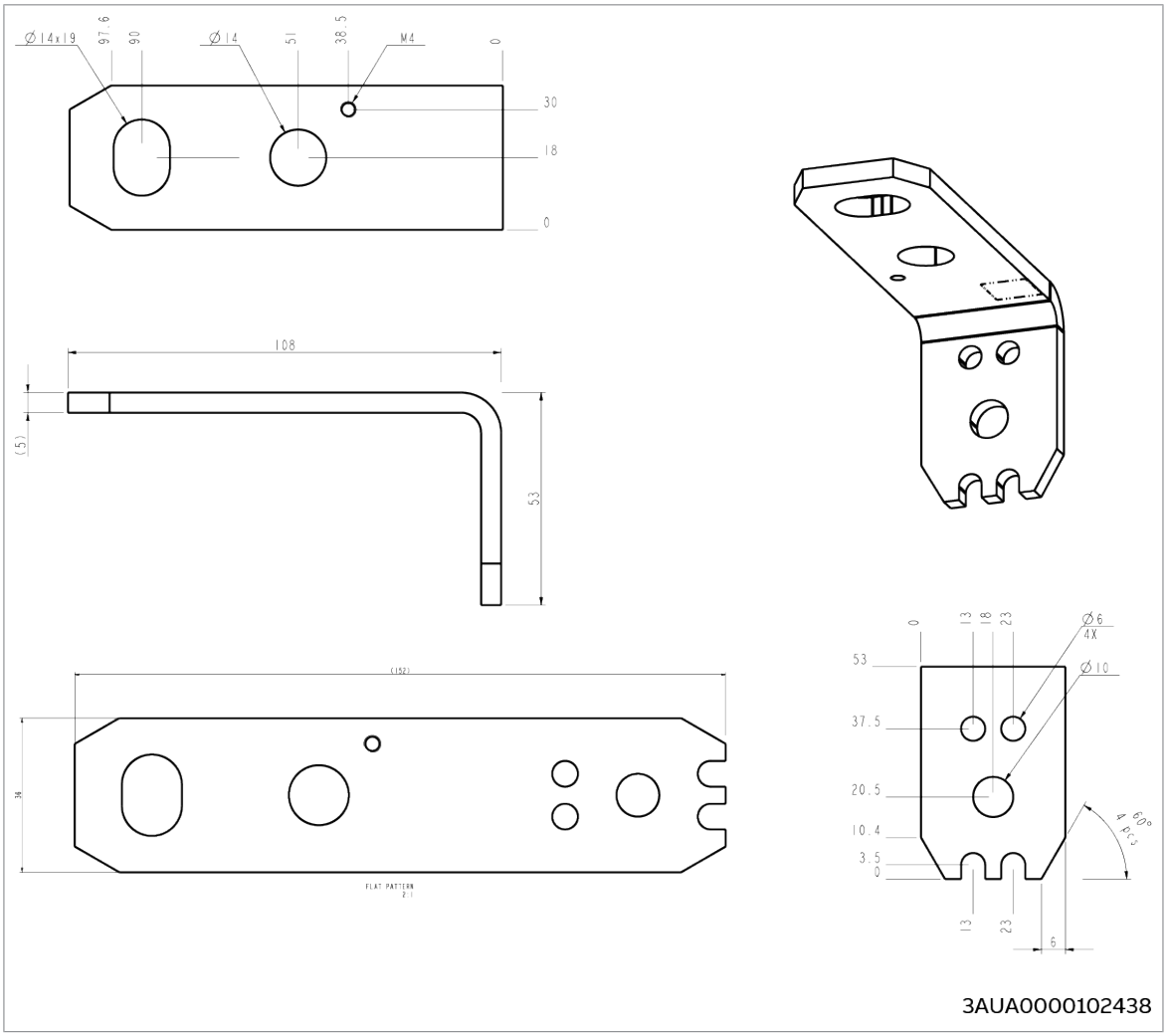

Mounting plate opening

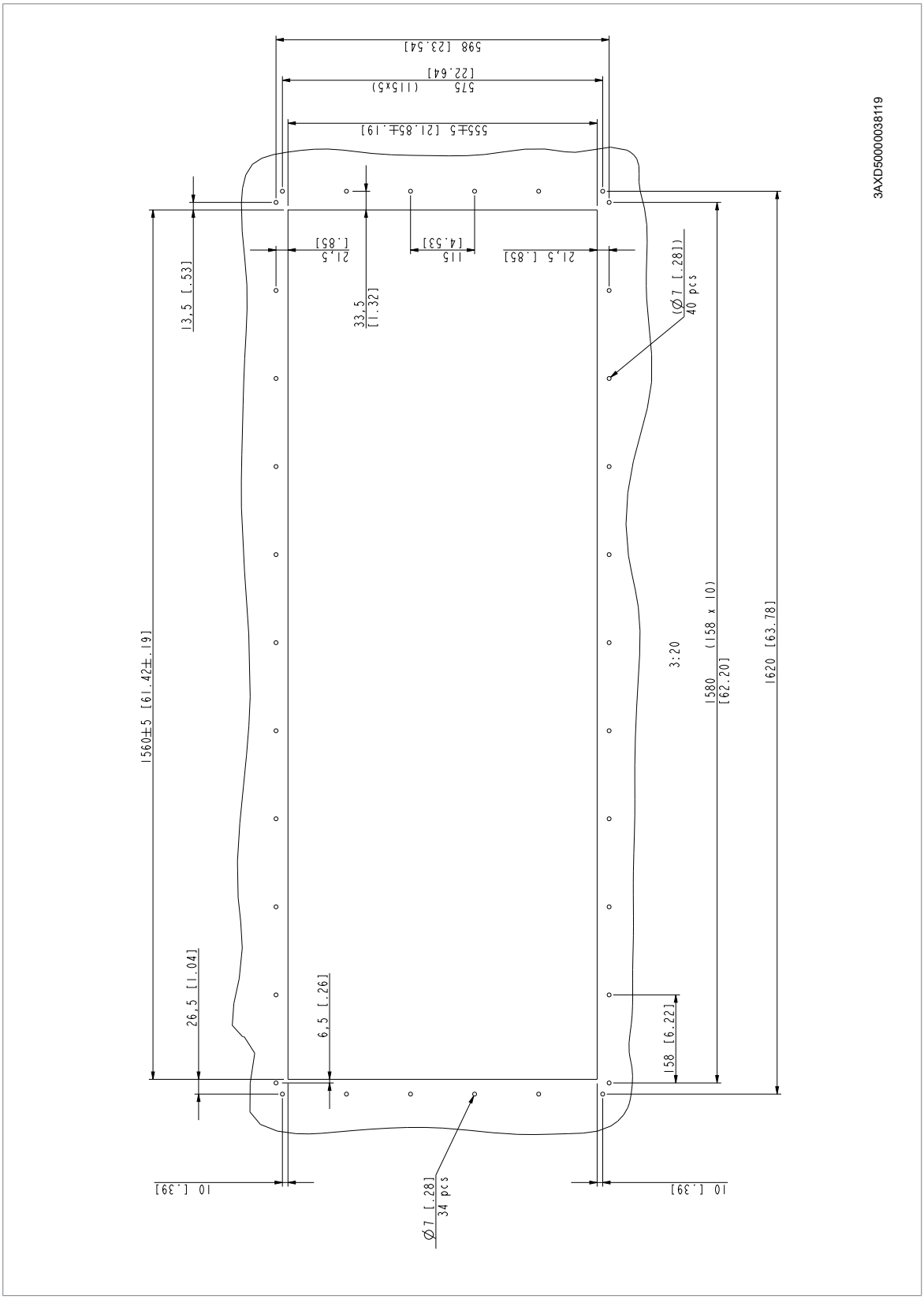

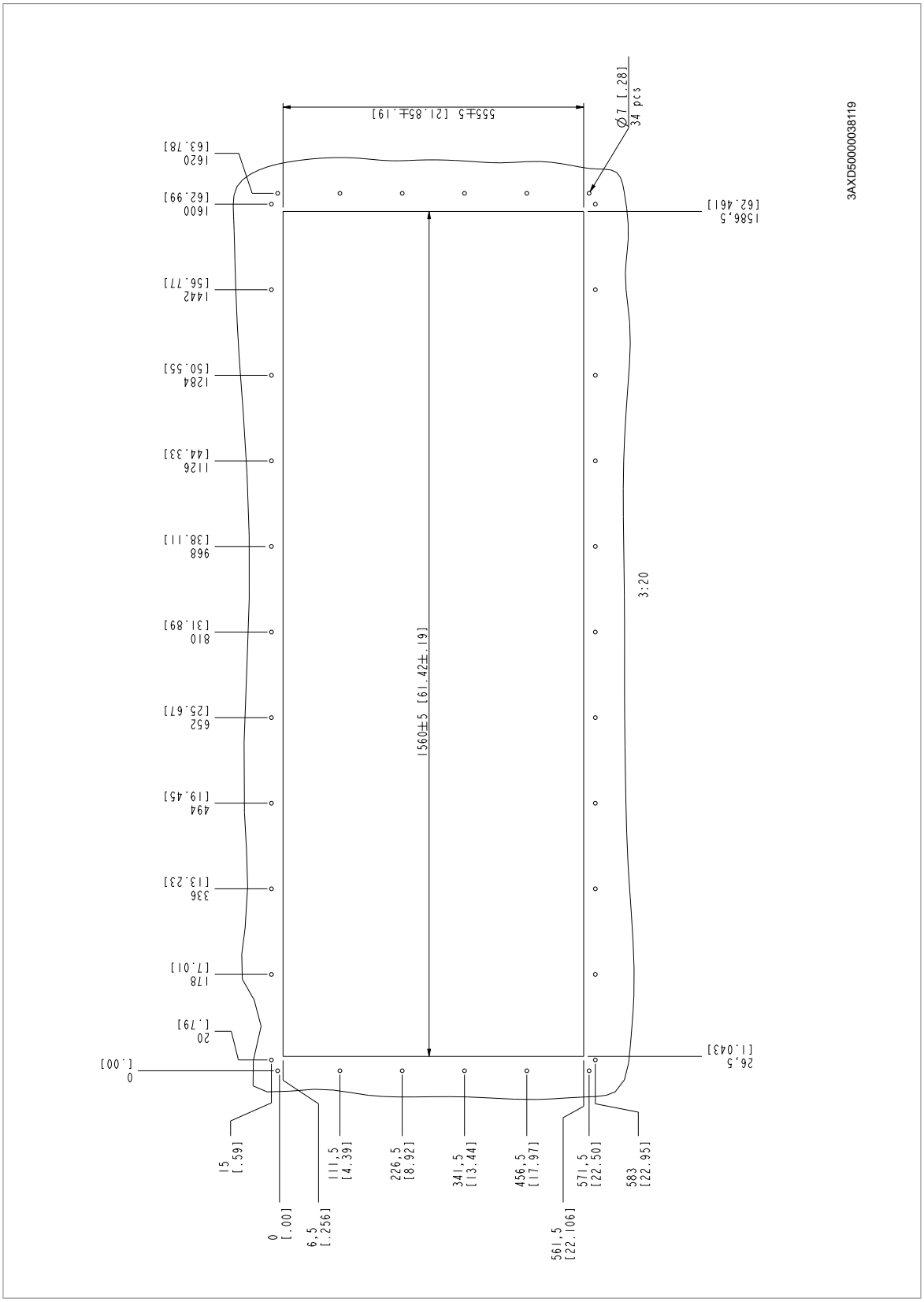
3AXD50000038119
Ø7 [.28]
34 pcs
555±5 [21.85±.19]
1620
[63.78]
1600
[62.99]
1586,5
[62.461]
1442
[56.771]
1284
[50.55]
1126
[44.33]
968
[38.11]
810
[31.89]
652
[25.67]
494
[19.45]
336
[13.23]
178
[7.01]
20
[.79]
0
[.00]
26,5
[1.043]
1560±5 [61.42±.19]
3:20
15
[.59]
0
[.00]
6,5
[.256]
111,5
[4.39]
226,5
[8.92]
341,5
[13.44]
456,5
[17.97]
561,5
[22.106]
571,5
[22.50]
583
[22.95]

External control unit

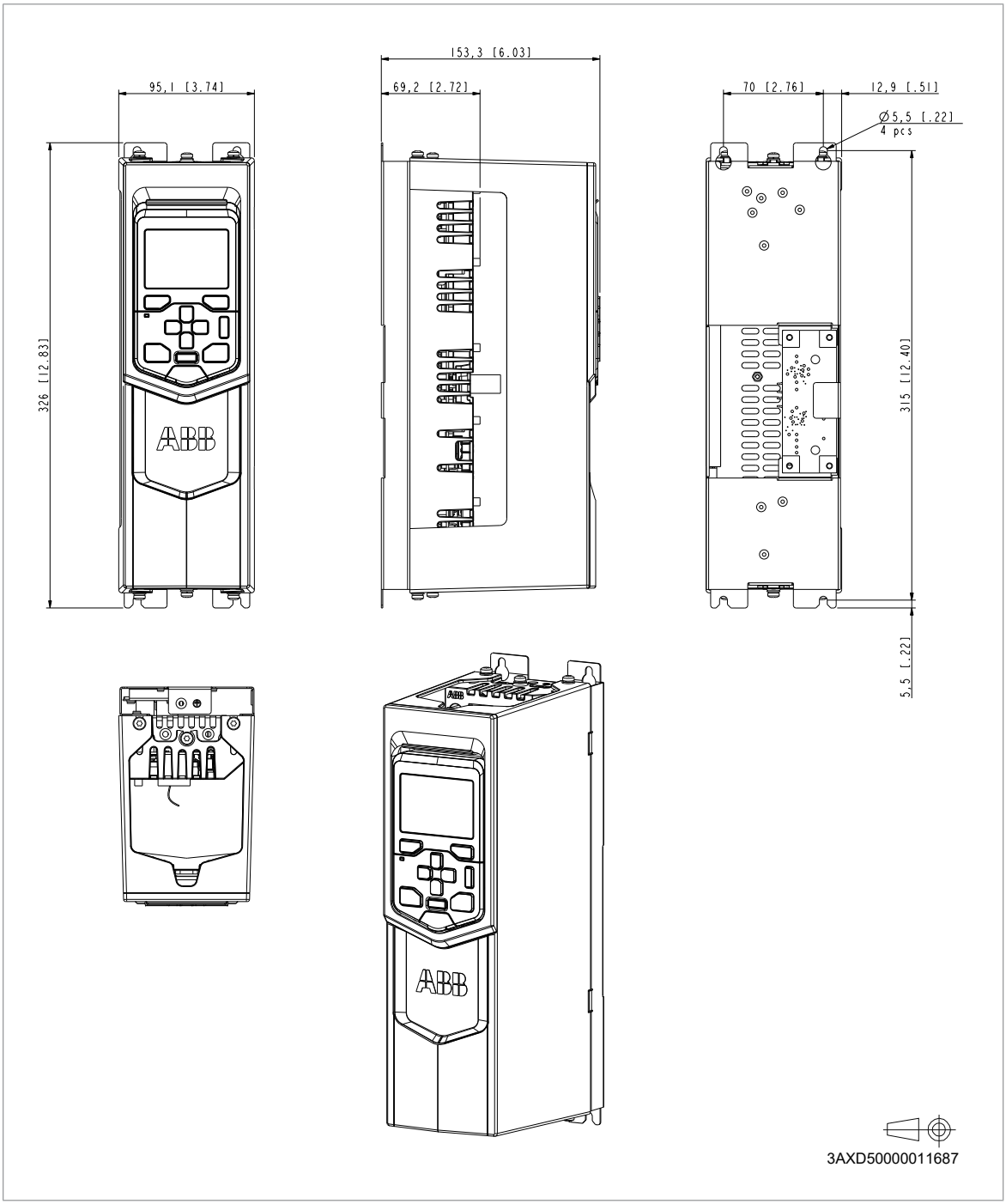

16

Example circuit diagram

Contents of this chapter

This chapter shows an example circuit diagram for a cabinet-installed drive module.

Example circuit diagram

This diagram is an example for the main wiring of a drive cabinet. Note that the diagram includes components which are not included in a basic delivery.

168 Example circuit diagram

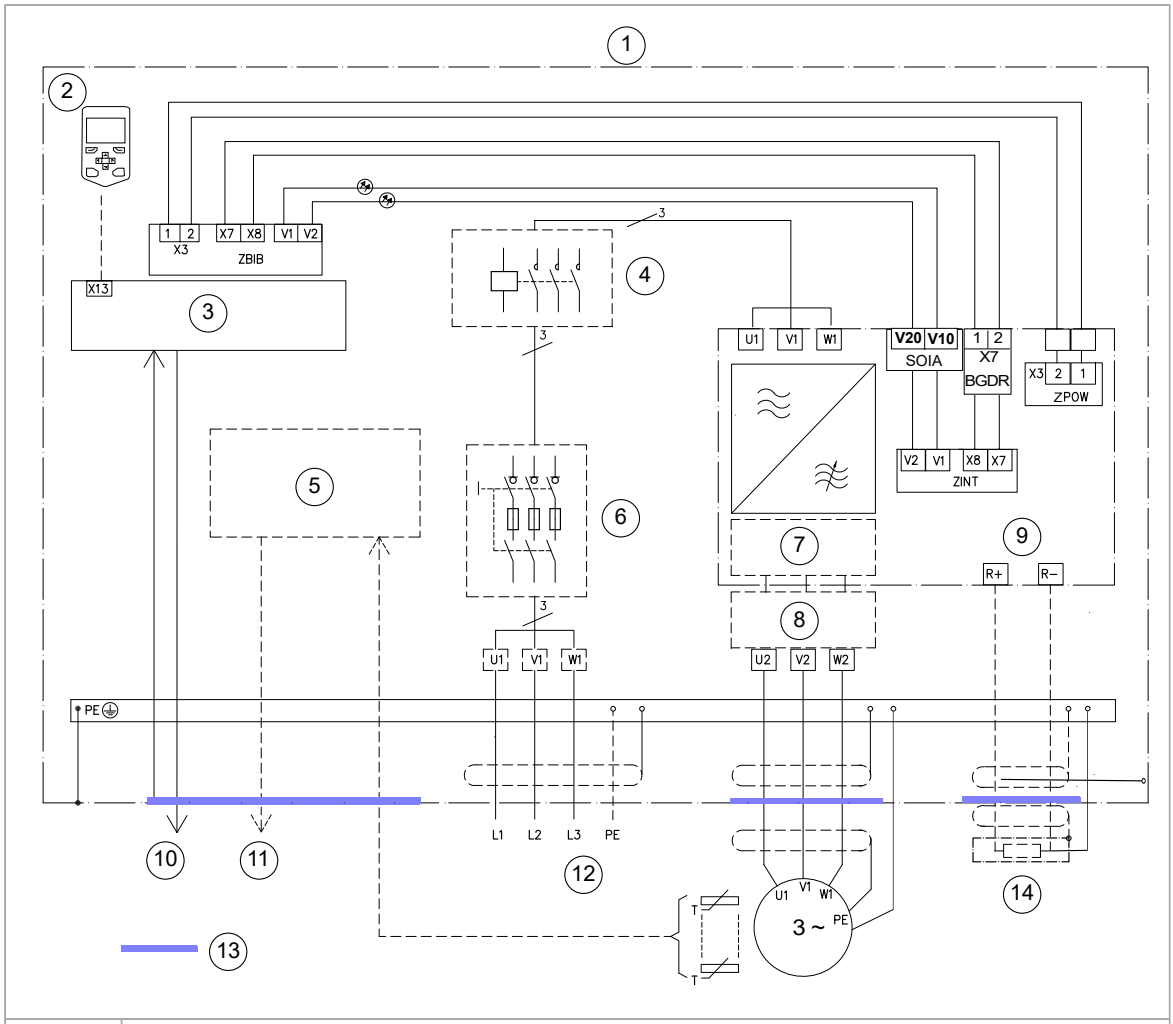

1	Cabinet
2	Control panel
3	ZCU control unit
4	Main contactor[1)]
5	Motor temperature supervision[2)]
6	Switch fuse disconnector[1)]
7	Common mode filter[3)]
8	*du/dt* filter or sine filter[2)]
9	Drive module
10	Input and output signals
11	Alarm
12	Supply
13	360 degree grounding recommended
14	Brake resistor[2)]

1) Must be acquired by the customer.
2) Optional (can be installed by the customer).
3) Optional (can be selected with an option code).

17

The Safe torque off function

Contents of this chapter

This chapter describes the Safe torque off (STO) function of the drive and gives instructions for its use.

Description

WARNING In case of parallel-connected drives or dual-winding motors, the STO must be activated on each drive to remove the torque from the motor.

The Safe torque off function can be used, for example, as the final actuator device of safety circuits (such as an emergency stop circuit) that stop the drive in case of danger. Another typical application is a prevention of unexpected start-up function that enables short-time maintenance operations like cleaning or work on non-electrical parts of the machinery without switching off the power supply to the drive.

When activated, the Safe torque off function disables the control voltage for the power semiconductors of the drive output stage, thus preventing the drive from generating the torque required to rotate the motor. If the motor is running when Safe torque off is activated, it coasts to a stop.

The Safe torque off function has a redundant architecture, that is, both channels must be used in the safety function implementation. The safety data given in this manual is calculated for redundant use, and does not apply if both channels are not used.

The Safe torque off function complies with these standards:

Standard	Name
IEC 60204-1:2021 EN 60204-1:2018	Safety of machinery – Electrical equipment of machines – Part 1: General requirements

Standard	Name
IEC 61000-6-7:2014	Electromagnetic compatibility (EMC) – Part 6-7: Generic standards – Immunity requirements for equipment intended to perform functions in a safety-related system (functional safety) in industrial locations
IEC 61326-3-1:2017	Electrical equipment for measurement, control and laboratory use – EMC requirements – Part 3-1: Immunity requirements for safety-related systems and for equipment intended to perform safety-related functions (functional safety) – General industrial applications
IEC 61508-1:2010	Functional safety of electrical/electronic/programmable electronic safety-related systems – Part 1: General requirements
IEC 61508-2:2010	Functional safety of electrical/electronic/programmable electronic safety-related systems – Part 2: Requirements for electrical/electronic/programmable electronic safety-related systems
IEC 61511-1:2017	Functional safety – Safety instrumented systems for the process industry sector
IEC 61800-5-2:2016 EN 61800-5-2:2007	Adjustable speed electrical power drive systems – Part 5-2: Safety requirements – Functional
EN IEC 62061:2021	Safety of machinery – Functional safety of safety-related control systems
EN ISO 13849-1:2015	Safety of machinery – Safety-related parts of control systems – Part 1: General principles for design
EN ISO 13849-2:2012	Safety of machinery – Safety-related parts of control systems – Part 2: Validation

The function also corresponds to Prevention of unexpected start-up as specified by EN ISO 14118:2018 (ISO 14118:2017), and Uncontrolled stop (stop category 0) as specified in EN/IEC 60204-1.

Compliance with the European Machinery Directive and the UK Supply of Machinery (Safety) Regulations

Refer to the technical data.

Wiring

The connection diagrams in this section are applicable to drives with ZCU control unit. For the connection diagrams of the UCU-20 control unit (option +V998), refer to UCU-20 control unit hardware manual (3AXD50001079246 [English]).

For the electrical specifications of the STO connection, see the technical data of the control unit.

Activation switch

In the wiring diagrams, the activation switch has the designation [K]. This represents a component such as a manually operated switch, an emergency stop push button switch, or the contacts of a safety relay or safety PLC.

- In case a manually operated activation switch is used, the switch must be of a type that can be locked out to the open position.
- The contacts of the switch or relay must open/close within 200 ms of each other.
- Drives with ZCU control unit: An FSO, FSPS, FSCS, or FPTC module can also be used. For more information, see the module documentation.
- Drives with UCU-20 control unit: An FSPS module can also be used. For more information, see the module documentation.

Cable types and lengths

- ABB recommends double-shielded twisted-pair cable.
- Maximum cable lengths:
  - 300 m (1000 ft) between activation switch [K] and drive control unit
  - 60 m (200 ft) between multiple drives
  - 60 m (200 ft) between external power supply and first control unit

Note: A short-circuit in the wiring between the switch and an STO terminal causes a dangerous fault. Therefore, it is recommended to use a safety relay (including wiring diagnostics) or a wiring method (shield grounding, channel separation) which reduces or eliminates the risk caused by the short-circuit.

Note: The voltage at the STO input terminals of the control unit must be at least 17 V DC for ZCU-14 control unit and 15 V DC for UCU-20 control unit to be interpreted as “1”.

The pulse tolerance of the input channels is 1 ms.

Grounding of protective shields

- Ground the shield in the cabling between the activation switch and the control unit at the control unit only.
- Ground the shield in the cabling between two control units at one control unit only.

Single drive (internal power supply)

Dual-channel connection

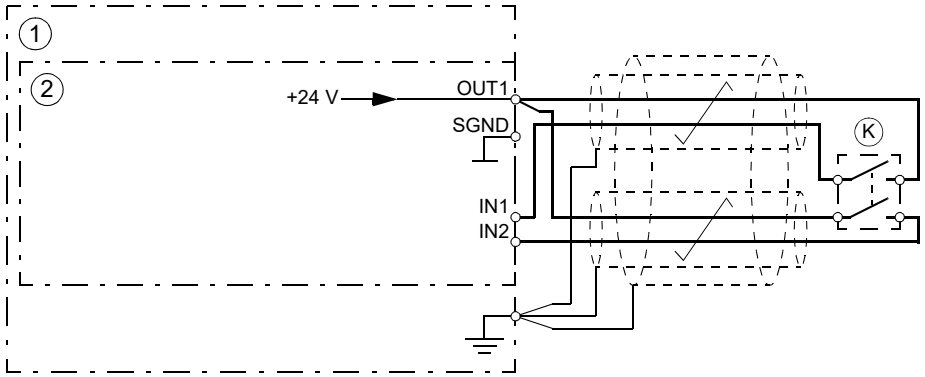

1	Drive
2	Control unit
K	Activation switch

Single-channel connection

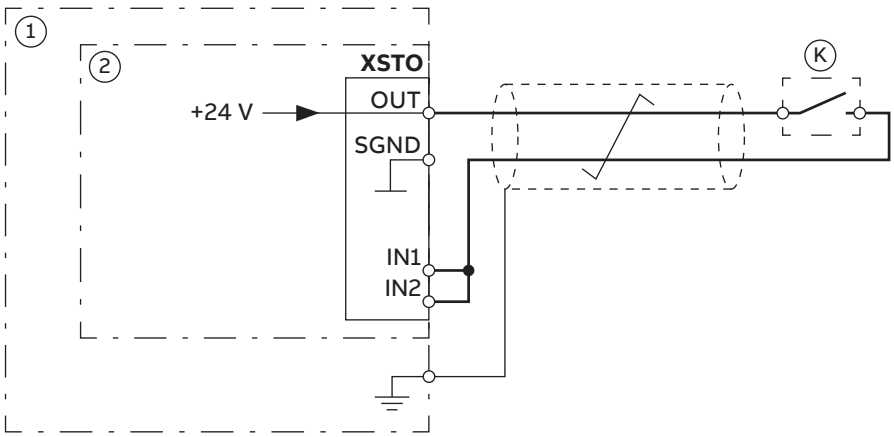

Note:

- Both STO inputs (IN1, IN2) must be connected to the activation switch. Otherwise, no SIL/PL classification is given.
- Pay special attention to avoiding any potential failure modes for the wiring. For example, use shielded cable. For measures for fault exclusion of wiring, see eg. EN ISO 13849-2:2012, table D.4.

1	Drive
2	Control unit
K	Activation switch **Note:** A single-channel activation switch can limit the SIL/PL capability of the safety function to a lower level than the SIL/PL capability of the STO function of the drive.

Multiple drives

Internal power supply

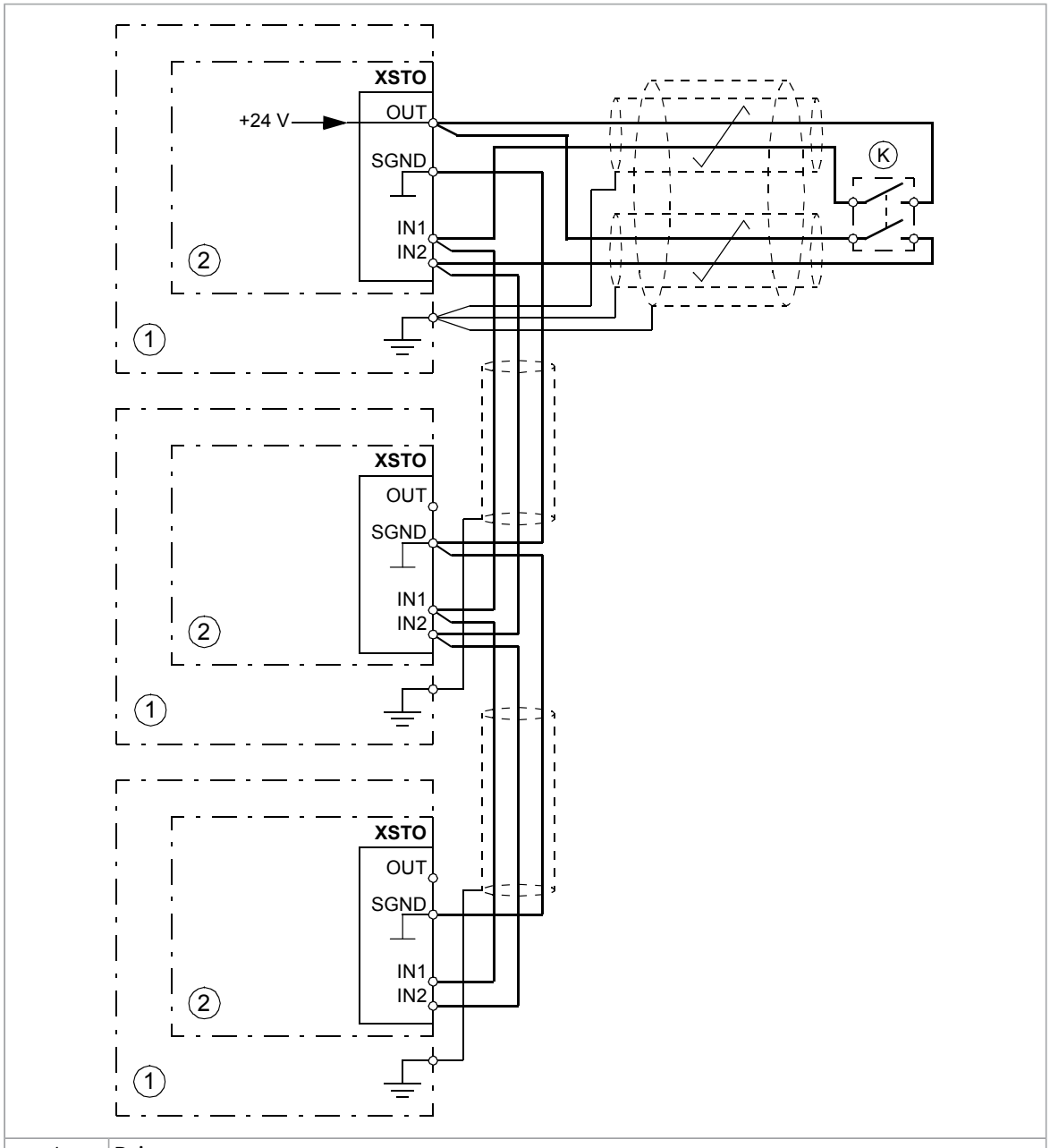

1	Drive
2	Control unit
K	Activation switch

External power supply

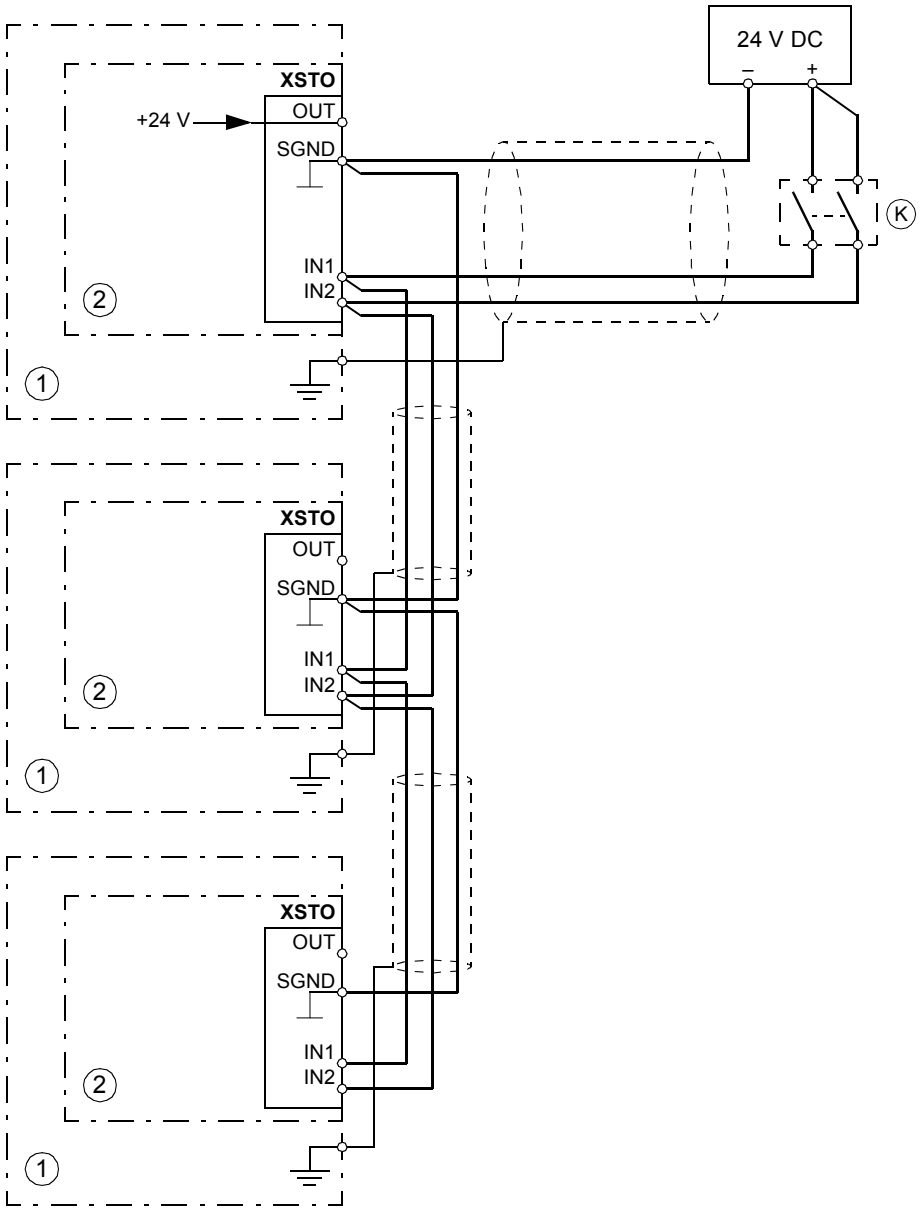

1	Drive
2	Control unit
K	Activation switch

Operation principle

1. The Safe torque off activates (the activation switch is opened, or safety PLC logic output value is 0, or safety relay contacts open).
2. The STO inputs of the drive control unit de-energize.
3. The control unit cuts off the control voltage from the output IGBTs.
4. The control program generates an indication as defined by parameter 31.22 (refer the firmware manual of the drive).
   The parameter selects which indications are given when one or both STO signals are switched off or lost. The indications also depend on whether the drive is running or stopped when this occurs.

   Note: This parameter does not affect the operation of the STO function itself. The STO function will operate regardless of the setting of this parameter: a running drive will stop upon removal of one or both STO signals, and will not start until both STO signals are restored and all faults reset.

   Note: The loss of only one STO signal always generates a fault as it is interpreted as a malfunction of STO hardware or wiring.
5. The motor coasts to a stop (if running). The drive cannot restart while the activation switch or safety relay contacts are open. After the contacts close, a reset may be needed (depending on the setting of parameter 31.22). A new start command is required to start the drive.

Start-up including validation test

To ensure the safe operation of a safety function, validation is required. The final assembler of the machine must validate the function by performing a validation test. The test must be performed

1. at initial start-up of the safety function
2. after any changes related to the safety function (circuit boards, wiring, components, settings, replacement of inverter module, etc.)
3. after any maintenance work related to the safety function
4. after a drive firmware update
5. at the proof test of the safety function.

Competence

The validation test of the safety function must be carried out by a competent person with adequate expertise and knowledge of the safety function as well as functional safety, as required by IEC 61508-1 clause 6. The test procedures and report must be documented and signed by this person.

Validation test reports

Signed validation test reports must be stored in the logbook of the machine. The report shall include documentation of start-up activities and test results, references to failure reports and resolution of failures. Any new validation tests performed due to changes or maintenance shall be logged into the logbook.

Validation test procedure

After wiring the Safe torque off function, validate its operation as follows.

Note: If the drive is equipped with safety option +Q972, +Q973 or +Q982, also do the procedure shown in the FSO module documentation.

If an FSCS-21 or FSPS-21 module is installed, refer to its documentation.

Action	☑
WARNING Obey the safety instructions. If you ignore them, injury or death, or damage to the equipment can occur.	☐
Make sure that the motor can be run and stopped freely during start-up.	☐
Stop the drive (if running), switch the input power off and isolate the drive from the power line using a disconnector.	☐
Check the STO circuit connections against the wiring diagram.	☐
Close the disconnector and switch the power on.	☐

Action	☑
Test the operation of the STO function when the motor is stopped. • Give a stop command for the drive (if running) and wait until the motor shaft is at a standstill. Make sure that the drive operates as follows: • Open the STO circuit. The drive generates an indication if one is defined for the 'stopped' state in parameter 31.22 (refer the firmware manual). • Give a start command to verify that the STO function blocks the drive's operation. The motor should not start. • Close the STO circuit. • Reset any active faults. Restart the drive and check that the motor runs normally.	☐
Test the operation of the STO function when the motor is running. • Start the drive and make sure the motor is running. • Open the STO circuit. The motor should stop. The drive generates an indication if one is defined for the 'running' state in parameter 31.22 (see the firmware manual). • Reset any active faults and try to start the drive. • Make sure that the motor stays at a standstill and the drive operates as described above in testing the operation when the motor is stopped. • Close the STO circuit. • Reset any active faults. Restart the drive and check that the motor runs normally.	☐
Test the operation of the failure detection of the drive. The motor can be stopped or running. • Open the 1st input channel of the STO circuit. If the motor was running, it should coast to a stop. The drive generates an FA81 fault indication (refer the firmware manual). • Give a start command to verify that the STO function blocks the drive's operation. The motor should not start. • Open the STO circuit (both channels). • Give a reset command. • Close the STO circuit (both channels). • Reset any active faults. Restart the drive and check that the motor runs normally. • Open the 2nd input channel of the STO circuit. If the motor was running, it should coast to a stop. The drive generates an FA82 fault indication (refer the firmware manual). • Give a start command to verify that the STO function blocks the drive's operation. The motor should not start. • Open the STO circuit (both channels). • Give a reset command. • Close the STO circuit (both channels). • Reset any active faults. Restart the drive and check that the motor runs normally.	☐
Document and sign the validation test report which verifies that the safety function is safe and accepted for operation.	☐

Use

1. Open the activation switch, or activate the safety functionality that is wired to the STO connection.
2. The STO inputs on the drive control unit de-energize, and the control unit cuts off the control voltage from the output IGBTs.
3. The control program generates an indication as defined by parameter 31.22 (refer the firmware manual of the drive).
4. The motor coasts to a stop (if running). The drive will not restart while the activation switch or safety relay contacts are open.
5. Deactivate the STO by closing the activation switch, or resetting the safety functionality that is wired to the STO connection.
6. Reset any faults before restarting.

⚠WARNING The Safe torque off function does not disconnect the voltage of the main and auxiliary circuits from the drive. Therefore maintenance work on electrical parts of the drive or the motor can only be carried out after isolating the drive from the supply and all other voltage sources.

⚠WARNING The drive cannot detect or memorize any changes in the STO circuitry when the drive control unit is not powered or when the main power to the drive is off. If both STO circuits are closed and a level-type start signal is active when the power is restored, it is possible that the drive starts without a fresh start command. Take this into account in the risk assessment of the system.

⚠WARNING Permanent magnet or synchronous reluctance [SynRM] motors only:

In case of a multiple IGBT power semiconductor failure, the drive can produce an alignment torque which maximally rotates the motor shaft by 180/*p* degrees (with permanent magnet motors) or 180/2*p* degrees (with synchronous reluctance [SynRM] motors) regardless of the activation of the Safe torque off function. *p* denotes the number of pole pairs.

Notes:

- If a running drive is stopped by using the Safe torque off function, the drive will cut off the motor supply voltage and the motor will coast to a stop. If this causes danger or is not otherwise acceptable, stop the drive and machinery using the appropriate stop mode before activating the Safe torque off function.
- The Safe torque off function overrides all other functions of the drive.
- The Safe torque off function is ineffective against deliberate sabotage or misuse.
- The Safe torque off function has been designed to reduce the recognized hazardous conditions. In spite of this, it is not always possible to eliminate all potential hazards. The assembler of the machine must inform the final user about the residual risks.

Maintenance

After the operation of the circuit is validated at start-up, the STO function shall be maintained by periodic proof testing. In high demand mode of operation, the maximum proof test interval is 20 years. In low demand mode of operation, the maximum proof test interval is 10 years; refer section Safety data (page 183).

There are two alternative procedures for proof testing:

1. Perfect proof testing. It is assumed that all dangerous failures of the STO circuit are detected during the test. PFD_{avg} values for STO with the perfect proof testing procedure are given in the safety data section.
2. Simplified proof testing. This procedure is faster and simpler than perfect proof testing. Not all dangerous failures of the STO circuit are detected during the test. The PFD_{avg} value for STO with the simplified proof testing procedure is given in the safety data section.

Note: The proof testing procedures are only valid for proof testing (periodic test, item 5 under section Start-up including validation test) but not for re-validation after changes made in the circuit. Re-validation (items 1…4 under Start-up including validation test) must be done according to the initial validation procedure.

Note: Refer also the Recommendation of Use CNB/M/11.050 (published by the European co-ordination of Notified Bodies) concerning dual-channel safety-related systems with electromechanical outputs:

- When the safety integrity requirement for the safety function is SIL 3 or PL e (cat. 3 or 4), the proof test for the function must be performed at least every month.
- When the safety integrity requirement for the safety function is SIL 2 (HFT = 1) or PL d (cat. 3), the proof test for the function must be performed at least every 12 months.

The STO function of the drive does not contain any electromechanical components.

In addition to proof testing, it is a good practice to check the operation of the function when other maintenance procedures are carried out on the machinery.

Include the Safe torque off operation test described above in the routine maintenance program of the machinery that the drive runs.

If any wiring or component change is needed after start-up, or the parameters are restored, do the test given in section Validation test procedure (page 177).

Use only spare parts approved by ABB.

Record all maintenance and proof test activities in the machine logbook.

Competence

The maintenance and proof test activities of the safety function must be carried out by a competent person with adequate expertise and knowledge of the safety function as well as functional safety, as required by IEC 61508-1 clause 6.

Perfect proof test procedure

Action	☑
WARNING Obey the safety instructions. If you ignore them, injury or death, or damage to the equipment can occur.	☐
Test the operation of the STO function. If the motor is running, it will stop during the test. • Give a stop command for the drive (if running) and wait until the motor shaft is at a standstill. Make sure that the drive operates as follows: • Open the STO circuit. The drive generates an indication if one is defined for the 'stopped' state in parameter 31.22 (see the firmware manual). • Close the STO circuit. • Reset any active faults. Restart the drive and check that the motor runs normally.	☐
Test the operation of the failure detection of the drive. The motor can be stopped or running. • Open the 1st input channel of the STO circuit. If the motor was running, it should coast to a stop. The drive generates an FA81 fault indication (see the firmware manual). • Open the STO circuit (both channels). • Give a reset command. • Close the STO circuit (both channels). • Reset any active faults. • Open the 2nd input channel of the STO circuit. If the motor was running, it should coast to a stop. The drive generates an FA82 fault indication (see the firmware manual). • Open the STO circuit (both channels). • Give a reset command. • Close the STO circuit (both channels). • Reset any active faults. Restart the drive and check that the motor runs normally.	☐
Document and sign the test report to verify that the safety function has been tested according to the procedure.	☐

Simplified proof test procedure

Action	☑
WARNING Obey the safety instructions. If you ignore them, injury or death, or damage to the equipment can occur.	☐
Test the operation of the STO function. If the motor is running, it will stop during the test. • Give a stop command for the drive (if running) and wait until the motor shaft is at a standstill. Make sure that the drive operates as follows: • Open the STO circuit. The drive generates an indication if one is defined for the 'stopped' state in parameter 31.22 (see the firmware manual). • Close the STO circuit. • Reset any active faults. Restart the drive and check that the motor runs normally.	☐
Document and sign the test report to verify that the safety function has been tested according to the procedure.	☐

Fault tracing

The indications given during the normal operation of the Safe torque off function are selected by drive control program parameter 31.22.

The diagnostics of the Safe torque off function cross-compare the status of the two STO channels. In case the channels are not in the same state, a fault reaction function is performed and the drive trips on an FA81 or FA82 fault. An attempt to use the STO in a non-redundant manner, for example activating only one channel, will trigger the same reaction.

Refer the firmware manual of the drive control program for the indications generated by the drive, and for details on directing fault and warning indications to an output on the control unit for external diagnostics.

Any failures of the Safe torque off function must be reported to ABB.

Safety data

The safety data for the Safe torque off function is given below.

Note: The safety data is calculated for redundant use, and applies only if both STO channels are used.

Frame size	SIL	SC	PL	PFH (T_1 = 20 a) (1/h)	PFD_{avg}			$MTTF_D$ (a)	DC (%)	SFF (%)	Cat.	HFT	CCF	T_M (a)	PFH_{diag} (1/h)	λ_{Diag_s} (1/h)	λ_{Diag_d} (1/h)
					Perfect proof test		Simplified proof test										
					T_1 = 5 a	T_1 = 10 a	T_1 = 5 or 10 a										
R11	3	3	e	3.65E-09	8.00E-05	1.60E-04	3.20E-04	11050	≥90	>90	3	1	80	20	6.20E-09	8.30E-07	1.80E-08
3AXD10001609376 C																	

- Drives with UCU-20 control unit (option +V998): The values for DC, PFH_{diag}, λ_{Diag_s} and λ_{Diag_d} in the table are according to ISO 13849-1. These values are not claimed according to IEC 61508. For drives with other control units, the values for DC, PFH_{diag}, λ_{Diag_s} and λ_{Diag_d} are according to ISO 13849-1 and IEC 61508.
- The STO is a type A safety component as defined in IEC 61508-2.
- Relevant failure modes:
  - The STO trips spuriously (safe failure)
  - The STO does not activate when requested
  - A fault exclusion on the failure mode “short circuit on printed circuit board” has been made (EN 13849-2, table D.5). The analysis is based on an assumption that one failure occurs at one time. No accumulated failures have been analyzed.
- STO response times:
  - STO reaction time (shortest detectable break): 1 ms
  - STO response time: 2 ms (typical), 30 ms (maximum)
  - Fault detection time: Channels in different states for longer than 200 ms
  - Fault reaction time: Fault detection time + 10 ms.
- Indication delays:
  - STO fault indication (parameter 31.22) delay: < 500 ms
  - STO warning indication (parameter 31.22) delay: < 1000 ms.

Terms and abbreviations

Term or abbreviation	Reference	Description
Cat.	EN ISO 13849-1	Classification of the safety-related parts of a control system in respect of their resistance to faults and their subsequent behavior in the fault condition, and which is achieved by the structural arrangement of the parts, fault detection and/or by their reliability. The categories are: B, 1, 2, 3 and 4.
CCF	EN ISO 13849-1	Common cause failure (%)
DC	EN ISO 13849-1	Diagnostic coverage (%)
HFT	IEC 61508	Hardware fault tolerance
$MTTF_D$	EN ISO 13849-1	Mean time to dangerous failure: (Total number of life units) / (Number of dangerous, undetected failures) during a particular measurement interval under stated conditions
PFD_{avg}	IEC 61508	Average probability of dangerous failure on demand, that is, mean unavailability of a safety-related system to perform the specified safety function when a demand occurs
PFH	IEC 61508	Average frequency of dangerous failures per hour, that is, average frequency of a dangerous failure of a safety related system to perform the specified safety function over a given period of time
PFH_{diag}	IEC/EN 62061	Average frequency of dangerous failures per hour for the diagnostic function of STO
PL	EN ISO 13849-1	Performance level. Levels a…e correspond to SIL
Proof test	IEC 61508, IEC 62061	Periodic test performed to detect failures in a safety-related system so that, if necessary, a repair can restore the system to an "as new" condition or as close as practical to this condition
SC	IEC 61508	Systematic capability (1…3)
SFF	IEC 61508	Safe failure fraction (%)
SIL	IEC 61508	Safety integrity level (1…3)

Term or abbreviation	Reference	Description
STO	IEC/EN 61800-5-2	Safe torque off
T_1	IEC 61508-6	Proof test interval. T_1 is a parameter used to define the probabilistic failure rate (PFH or PFD) for the safety function or subsystem. Performing a proof test at a maximum interval of T_1 is required to keep the SIL capability valid. The same interval must be followed to keep the PL capability (EN ISO 13849) valid. See also section Maintenance.
T_M	EN ISO 13849-1	Mission time: the period of time covering the intended use of the safety function/device. After the mission time elapses, the safety device must be replaced. Note that any T_M values given cannot be regarded as a guarantee or warranty.
λ_{Diag_d}	IEC 61508-6	Dangerous failure rate (per hour) of the diagnostics function of STO
λ_{Diag_s}	IEC 61508-6	Safe failure rate (per hour) of the diagnostics function of STO

TÜV certificate

The TÜV certificate is available on the Internet.

18

Resistor braking

Contents of this chapter

This chapter describes how to select, protect and wire brake choppers and resistors. The chapter also contains the technical data.

When to use resistor braking

Resistor braking is necessary for high capacity braking of the motor and machinery if a regenerative drive cannot be used.

Operation principle and hardware description

The drive can be equipped with optional built-in brake chopper (+D150). Brake resistors are available as add-on kits.

The brake chopper handles the extra energy generated by motor during a quick deceleration. The extra energy increases the drive DC link voltage. The chopper connects the brake resistor to the DC link whenever the voltage is higher than the operation limit of the chopper. Energy consumption by the resistor losses lowers the voltage until it is below the limit at which the chopper stops.

Planning the braking system

Generic guidelines

This section contains generic brake cable type, length and placing instructions, rules on how to minimize electromagnetic interference and descriptions and requirements for protections.

Resistor cables

Cable type

Use the same cable type for the resistor cabling as for the drive input cabling or, alternatively, a two conductor shielded cable with the same cross-sectional area.

Maximum cable length

The maximum length of the resistor cable(s) is 10 m (33 ft).

Minimizing electromagnetic interference

Make sure that the installation is compliant with the EMC requirements. Obey these rules in order to minimize electromagnetic interference caused by the rapid voltage and current changes in the resistor cables:

- Shield the brake resistor cable. Use shielded cable or a metallic enclosure. If you use unshielded single-core cables, route them inside a cabinet that efficiently suppresses the radiated emissions.
- Install the cables away from other cable routes.
- Avoid long parallel runs with other cables. The minimum parallel cabling separation distance is 0.3 meters (1 ft).
- Cross the other cables at 90° angles.
- Keep the cable as short as possible in order to minimize the radiated emissions and stress on the brake chopper. The longer the cable the greater the radiated emissions, inductive load and voltage peaks over the IGBT semiconductors of the brake chopper.

Protecting the resistor cable against short-circuits

The input fuses of the drive will also protect the resistor cable when it is identical with the input cable.

Resistor thermal switch

Use a resistor with a thermal switch (standard in ABB resistors).

Make sure that the cable in the resistor thermal switch circuit meets the following requirements:

- shielded cable
- rated operating voltage between a core and ground > 750 (U_0)
- insulation test voltage > 2.5 kV
- jacket material for at least 90 °C (194 °F). Take into account further requirements due to resistor construction and temperature.

Protecting the system against thermal overload

The brake chopper protects itself and the resistor cables against thermal overload when the cables are dimensioned according to the nominal current of the drive. The drive control program includes a resistor overload protection function which can be tuned by the user. See the firmware manual.

EMC compliance of the complete installation

ABB cannot test that the EMC requirements are fulfilled with custom brake resistors and cabling. The customer must consider the EMC compliance of the complete installation.

Selecting the installation location for the brake resistors

Protect the open (IP00) brake resistors against contact. Install the brake resistor in a place where it cools effectively. Arrange the cooling of the resistor so that:

- no danger of overheating is caused to the resistor or nearby materials, and
- the temperature of the space that the resistor is in does not go above the allowed maximum value.

⚠WARNING The materials near the brake resistor must be non-flammable. The surface temperature of the resistor is high. Airflow from the resistor can have a high temperature. If the exhaust vents connect to a ventilation system, make sure that the material withstands high temperatures. Protect the resistor against contact.

Protecting the system in fault situations

A main contactor is not required for protecting against resistor overheating when the resistor is dimensioned according to the instructions and the internal brake chopper is in use. The drive will disable power flow through the input bridge if the chopper remains conductive in a fault situation but the charging resistor may fail.

Note: If an external brake chopper (outside the drive module) is used, ABB always requires a main contactor.

Selecting the drive, brake chopper and brake resistor

For the ratings of the brake choppers and resistors, refer to the resistor braking technical data.

1. Define the basic data: maximum power generated by the motor during the braking (P_{br}), braking time (t_{br}) and braking cycle time (T).
2. Select the drive. Take its resistor braking capacity into account. The power rating of the drive and brake chopper (P_{brmax}) must be greater than or equal to P_{br}.
3. Make sure that the ABB default brake resistor assembly can dissipate the braking energy. The energy generated by the motor during one resistor heat dissipation period (400 s) must be equal to or smaller than the heat dissipation capacity (E_R) of the resistor assembly. If it is not, you cannot use the default ABB resistor assembly. These alternatives are possible:
   - If it is possible, decrease the braking power or braking time, or prolong the braking cycle time.
   - Select a custom brake resistor with high enough heat dissipation capacity. The resistance may not be smaller than the minimum value defined for the chopper.
   - Use multiple of the ABB default brake resistors. Make sure that the total resistance seen from the brake chopper terminals remains unchanged. An example connection is shown below. The connection of an ABB default brake resistor assembly is on the left (two resistors). The equivalent multiple resistor

connection is on the right (8 resistors). The heat dissipation capacity is four times bigger.

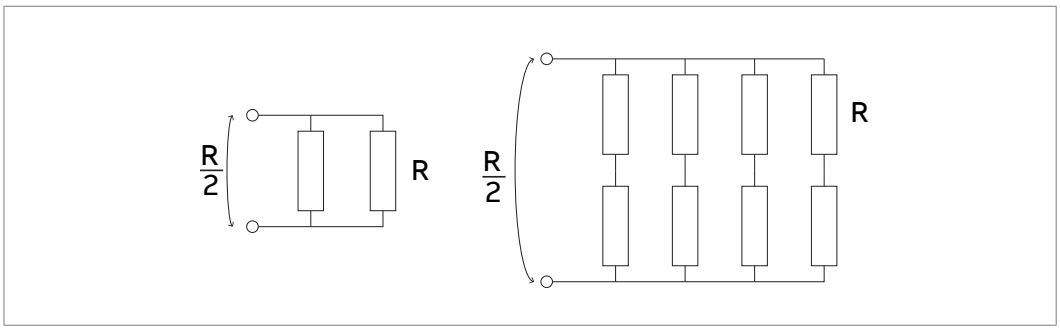

Calculation example

Drive: ACS880-04F-582A-5+P943. Maximum continuous braking power (P_{brcont}) of the internal brake chopper = 315 kW. Preselected ABB resistor = 2×SAFUR200F50. Braking power of the motor is 300 kW. The duration of a braking cycle (T) is three minutes -> number of braking pulses in 400 seconds = 2.2. The braking time (t_{br}) is 20 seconds.

P_{br} = 300 kW < P_{brcont} = 315 kW. This is ok.

The energy generated by the motor during a 400-second period = 2.2 × 300 kW × 20 s = 13200 kJ. The brake resistor withstands an energy pulse of 10800 kJ in every 400 seconds period. 13200 kJ > 10800 kJ. -> The resistor is too small. -> Decrease the braking power or braking time or select a custom brake resistor as described in section Selecting a custom brake resistor (page 190).

Selecting a custom brake resistor

If you want to use custom brake resistor instead of the default ABB resistor:

1. Make sure that the brake resistor resistance not too low, ie, this equation is true. Too low resistance causes overcurrent.

   $$R \geq R_{min}$$

   where

R	Resistance of the custom brake resistor
R_{min}	Minimum permitted resistance for the brake resistor

   CAUTION Do not use a brake resistor with a resistance lower than the specified minimum value. It causes overcurrent that damages the brake chopper and the drive.

2. Make sure that the brake resistor resistance is not too high, ie, this equation is true. Too high resistance limits the braking capacity.

   $$P_{max} < \frac{U_{DC}^2}{R}$$

   where

P_{max}	Maximum power generated by the motor during the braking
U_{DC}	Drive DC voltage during the braking: 1.35 · 1.2 · 415 V (when supply voltage is 380 … 415 V AC) 1.35 · 1.2 · 500 V (when supply voltage is 440 … 500 V AC) 1.35 · 1.2 · 690 V (when supply voltage is 525 … 690 AC)
R	Resistance of the custom resistor

3. Make sure that the brake resistor voltage rating match with the drive DC voltage during the braking. See the drive DC voltage values in the table above.
4. Make sure that the resistor can dissipate the energy transferred to it during the braking:
   - Braking energy does not exceed the resistor heat dissipation capacity (E_r) during the specified period.
   - The resistor is installed in a space that is sufficiently cooled to prevent excessive heat accumulation.
5. If you want to monitor the actual resistor temperature, make sure that the resistor has a temperature sensor.

Mechanical installation of resistors

All brake resistors must be installed outside the drive. Obey the resistor manufacturer's instructions.

Electrical installation

Measuring the insulation of the assembly

Obey the instructions given in section Measuring the insulation resistance of the brake resistor circuit (page 82).

Connection diagram

See section Power cable connection diagram (page 85).

Connection procedure

- Connect the resistor cables to the R+ and R- terminals in the same way as the other power cables. If a shielded three-conductor cable is used, cut the third conductor and ground the twisted shield of the cable (protective earth conductor of the resistor assembly) at both ends.
- Wire the thermal switch to a digital input on the drive control unit as shown below.

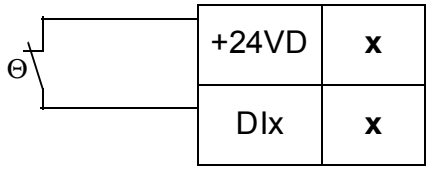

Start-up

WARNING Make sure that there is sufficient ventilation. New brake resistors can have a protective grease coating. When the resistor warms up for the first time, the grease burns off and can cause some smoke.

Parameter settings

This section describes the parameter settings for an example application in which:

- Drive uses brake resistor thermal model for the resistor overload protection.
- The brake resistor has a temperature sensor. The drive monitors the sensor status via a digital input. An overtemperature indication causes a fault trip.

Set parameters in the example application as follows:

- Set parameter 30.30 to value Disable. This disables the overvoltage control of the drive DC link. the brake chopper operation is possible.
- Set parameter 43.06 to Enabled with thermal model. This enables the brake chopper operation and activates the brake resistor overload protection function with the thermal model.
- Set parameters 43.08, 43.09 and 43.10 according to the brake resistor data. These parameters define the thermal time constant, continuous power rating and resistance for the brake resistor thermal model.
- Set parameters 43.11 and 43.12 to suitable values. They define the warning and fault resistor temperature limits for the brake resistor thermal model.
- Set parameter 31.01 to point to the digital input to which the brake resistor temperature sensor is connected. This defines the source for the external event 1 function.
- Set parameter 31.02 to Fault. This defines fault as the event type for the external event 1 function.

⚠WARNING If you disable the brake chopper with a parameter setting, also disconnect the brake resistor cable from the drive. Otherwise, there is a risk of resistor overheating and damage.

Technical data

Ratings

The table below gives the ratings for resistor braking.

ACS880-04F-...	Internal brake chopper		Example brake resistor(s)			
	P_{brcont}	R_{min}	Type	R	E_R	P_{Rcont}
	kW	ohm		ohm	kJ	kW
U_n = 400 V						
504A-3	250	2.0	2×SAFUR125F500	2.0	7200	18
584A-3	315	1.3	2×SAFUR200F500	1.3	10800	27
649A-3	315	1.3	2×SAFUR200F500	1.3	10800	27
725A-3	400	0.7	3×SAFUR200F500	0.9	16200	40
820A-3	400	0.7	3×SAFUR200F500	0.9	16200	40
880A-3	400	0.7	3×SAFUR200F500	0.9	16200	40
U_n = 500 V						
459A-5	250	2.0	2×SAFUR125F500	2.0	7200	18
502A-5	250	2.0	2×SAFUR125F500	2.0	7200	18
582A-5	315	1.3	2×SAFUR200F500	1.3	10800	27
634A-5	315	1.3	2×SAFUR200F500	1.3	10800	27
715A-5	400	0.7	3×SAFUR200F500	0.9	16200	40
820A-5	400	0.7	3×SAFUR200F500	0.9	16200	40
880A-5	400	0.7	3×SAFUR200F500	0.9	16200	40
U_n = 690 V						
329A-7	285	2.2	SAFUR200F500	2.7	3600	13
369A-7	285	2.2	SAFUR200F500	2.7	3600	13
429A-7	285	2.2	SAFUR200F500	2.7	3600	13
470A-7	350	2.0	2×SAFUR125F500	2.0	7200	18
522A-7	350	2.0	2×SAFUR125F500	2.0	7200	18
590A-7	400	1.8	2×SAFUR125F500	2.0	7200	18
650A-7	400	1.8	2×SAFUR125F500	2.0	7200	18
721A-7	400	1.8	2×SAFUR125F500	2.0	7200	18
						3AXD00000588487

P_{brcont}	Maximum continuous braking power. The braking is considered continuous if the braking time exceeds 30 seconds.
R_{min}	Minimum permitted resistance value for the brake resistor
R	Resistance value of the ABB default brake resistor
E_R	Energy pulse that the ABB default brake resistor withstands and can dissipate every 400 seconds
P_{Rrcont}	Continuous heat dissipation capacity (power) of the resistor when placed correctly

The ratings apply at an ambient temperature of 40 °C (104 °F).

SAFUR resistor data

These features are common to all SAFUR resistors:

- Degree of protection: IP00 (open)
- Resistor cable tightening torque: 9 N·m
- Thermal time constant: 555 s
- In-built overheat temperature sensor
- Not UL listed.

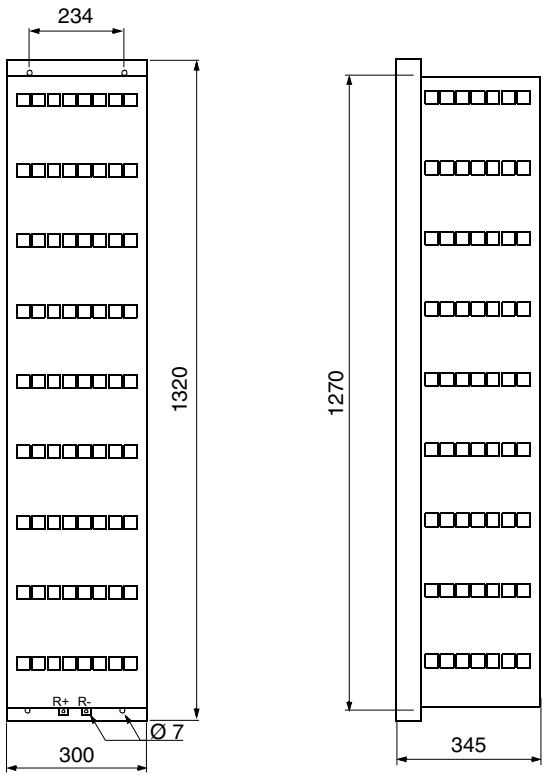

Brake resistor type	*R* [ohm]	E_r [kJ]	P_{Rcont} [kW]	Weight	ABB ordering code
SAFUR125F500	4.0	3600	9	25 kg (55 lb)	68759285
SAFUR200F500	2.7	5400	13.5	30 kg (66 b)	68759340

R	Resistance
E_R	Energy pulse that the ABB default brake resistor withstands during a 400 s duty cycle. This energy will heat the resistor element from 40 °C to the maximum allowable temperature.
P_{Rcont}	Continuous heat dissipation capacity (power) of the resistor when placed correctly

Terminals and cable entry data

See section Terminal and entry data for the power cables (page 144).

19

Filters

Contents of this chapter

This chapter describes how to select d*u*/d*t* and sine filters for the drive.

d*u*/d*t* filters

When is a d*u*/d*t* filter necessary?

See Examining the compatibility of the motor and drive (page 54).

Selection table

d*u*/d*t* filter types for the drive modules are given below.

Drive module type ACS880-04F-...	d*u*/d*t* filter type	Drive module type ACS880-04F-...	d*u*/d*t* filter type	Drive module type ACS880-04F-...	d*u*/d*t* filter type
U_n = 400 V		U_n = 500 V		U_n = 690 V	
504A-3	FOCH0610-70	459A-5	FOCH0610-70	329A-7	FOCH0610-70
584A-3	FOCH0610-70	502A-5	FOCH0610-70	369A-7	FOCH0610-70
649A-3	FOCH0610-70	582A-5	FOCH0610-70	429A-7	FOCH0610-70
725A-3	FOCH0875-70	634A-5	FOCH0610-70	470A-7	FOCH0610-70
820A-3	FOCH0875-70	715A-5	FOCH0875-70	522A-7	FOCH0610-70
880A-3	FOCH0875-70	820A-3	FOCH0875-70	590A-7	FOCH0610-70
-	-	880A-5	FOCH0875-70	650A-7	FOCH0875-70
-	-	-	-	721A-7	FOCH0875-70
					3AXD00000588487

Ordering codes

Filter type	ABB ordering code
FOCH0610-70	68550505
FOCH0875-70	3AUA0000129544

Description, installation and technical data of the FOCH filters

See FOCH d*u*/d*t* filters hardware manual (3AFE68577519 [English]).

Sine filters

When is a sine filter necessary?

See section Examining the compatibility of the motor and drive (page 54).

Selection table

Sine filter types for the drive modules are given below.

Drive module type ACS880-04F-...	sine filter type	Drive module type ACS880-04F-...	sine filter type	Drive module type ACS880-04F-...	sine filter type
U_n = 400 V		U_n = 500 V		U_n = 690 V	
504A-3	NSIN0900-6	459A-5	NSIN0485-6	329A-7	NSIN0485-6
584A-3	NSIN0900-6	502A-5	NSIN0900-6	369A-7	NSIN0485-6
649A-3	NSIN0900-6	582A-5	NSIN0900-6	429A-7	NSIN0485-6
725A-3	NSIN0900-6	634A-5	NSIN0900-6	470A-7	NSIN0485-6
820A-3	NSIN0900-6	715A-5	NSIN0900-6	522A-7	NSIN0485-6
880A-3	NSIN0900-6	820A-3	NSIN0900-6	590A-7	NSIN0900-6
-	-	880A-5	NSIN0900-6	650A-7	NSIN0900-6
-	-	-	NSIN0900-6	721A-7	NSIN0900-6
					3AXD00000588487

Ordering codes

Filter type	ABB ordering code
NSIN0485-6	64254936
NSIN0900-6	64254961

Derating

See section Deratings for special settings in the drive control program (page 133).

Description, installation and technical data of the sine filters

See Sine filters hardware manual (3AXD50000016814 [English]). For more information, contact ABB.

Further information

Product and service inquiries

Address any inquiries about the product to your local ABB representative, quoting the type designation and serial number of the unit in question. A listing of ABB sales, support and service contacts can be found by navigating to new.abb.com/contact-centers.

Product training

For information on ABB product training, navigate to new.abb.com/service/training.

Providing feedback on ABB manuals

Your comments on our manuals are welcome. Navigate to forms.abb.com/form-26567.

Document library on the Internet

You can find manuals and other product documents in PDF format on the Internet at www.abb.com/drives/documents.

CIP a4 / WS a4 (frozen)
PDF-A4
Created 2025-06-26, 14:43:42

www.abb.com/drives

3AXD50000034664E

© Copyright 2025 ABB. All rights reserved.
Specifications subject to change without notice.

3AXD50000034664 Rev E (EN) 2025-06-26