GENERAL CATALOGUE

# Enclosures for Automation

## IS2 Enclosures



# Summary
## Enclosures for automation


INTRODUCTION 1

IS2 ENCLOSURES
IS2 EMC ENCLOSURES 2

WIRING DUCTS 3

IN-DEPTH TECHNICAL INFORMATION 4

OVERALL DIMENSIONS 5

INDEX OF CODES 6

## Chapter 1
Introduction

**1**–4 **Great quality, economically unbeatable**

**1**–6 **The safety provided by a certified product**

**1**–7 **Customized directly in the factory**

# Introduction
## A solution for every application

Enclosure for Automation. Great quality, economically unbeatable.
The ABB range of metal structures for automation was conceived and designed based on many years' experience of working alongside the major switchboard and machine manufacturers in Italy and on the most highly industrialised and technological world markets.

The metal structures conform to the IEC 62208 and IEC 60439-1 reference Standards and to the new IEC 61439-1-2 Standard.

Their performances are the market reference ones: high IP degrees of protection (according to IEC 60529) and IK (according to IEC 62262), which allow installation in most industrial environments.

**Ideal enclosures, special apparatus**
Where the new enclosures for automation are the most advanced to be found on the market today, ABB's automation apparatus is also a synonym of technological innovation.

The enclosures for automation are, of course, integrated with the various ABB control and operating apparatus, and all the electrical and mechanical values (dissipation, short-time withstand currents, insulation distances, etc.) have been analysed and checked by the manufacturer.

They also offer a high level of preparation for assembly of the apparatus, with optimised hole drillings, fixings and overall dimensions.

And all this is to save you time!





**Safety & protection**
We make it easy to create a safe working environment, providing innovative and user friendly machine safety solutions.
With a range of solutions to protect people and equipment, ABB is a trusted partner to support safety in the most productive way.

**Affordable range**
Focusing on cost-optimization of components, exploring alternative materials and managing the supply chain delivers cost effective solutions - all this while improving the functionality.
A complete range enables customers to select the right product for their application.

**Easy to install**
The focus for ABB is to think of the customer application first. ABB engineers continuously evaluate ways to simplify the installation process.
The focus is on innovative product designs that make it easier to install and maintain components and systems.

Simple instructions and the right accessories mitigate against mounting errors. Use of an ABB product can improve productivity and machine quality.

# Introduction

## The safety provided by a certified product

The law states that all the products must conform to the European Directives and to the reference product Standards, but this is not enough for ABB.

We prefer an external organization to certify the quality of our products, especially with regard to the more critical aspects, both in technical and application terms.



All the products in the range are also UL approved to satisfy requests from markets where this mark is compulsory.

The technical characteristics and high degree of protection allow their use in environments with a potentially explosive atmosphere.




In fact, the switchgear and enclosures conform to the ATEX 99/92/CE and 94/9/CE Directive (suitable for use in areas 2 and 22).

The IS2 enclosure versions dedicated to uses where electromagnetic compatibility (EMC) is required, have also obtained the relative certification.

# Introduction
## Customized directly in the factory

Custom Made Service is ABB's new service for automation metal structures, which, on request, are supplied painted, drilled and, where necessary, assembled according to the customer's specific requirements.

All the products in the range are also UL approved to satisfy requests from markets where this mark is compulsory.

**Painting**
A shade of color other than the standard one (grey orange peel RAL 7035) can be requested on the mounted versions of the enclosure.
For the various colors/finishes and for details of the painting cycle characteristics, please consult page XXX of this catalogue.

**Customized drilling**
Custom Made Service offers a drilling service complying with your own specific drawing, made using CAD dwg or dxf format drawings. The useful dimensions for drilling are indicated on page XXX and the following.

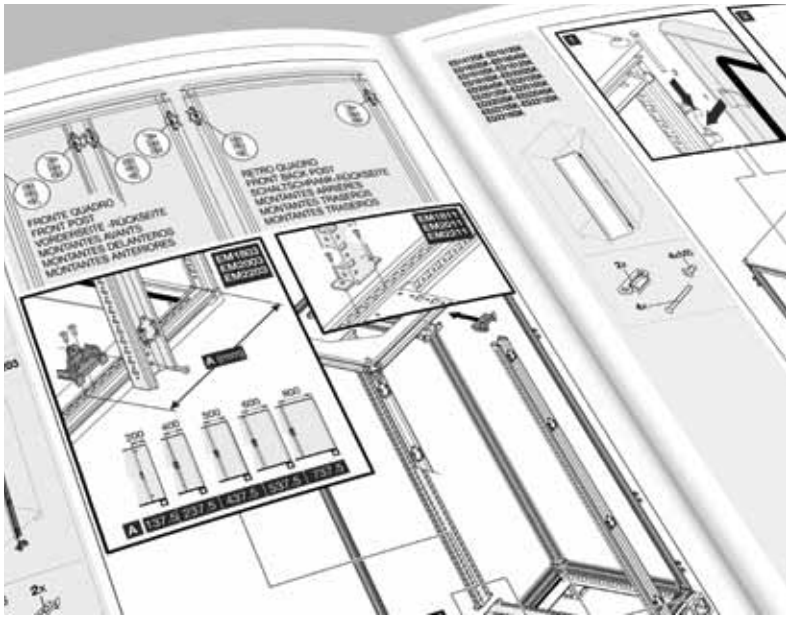

**Enclosure/Accessories assembly**
Should you prefer a solution ready to be worked, you can choose the Custom Made Service solution dedicated to battery assembly of several columns. The accessories can also be supplied already factory-mounted by ABB.




**Instruction manuals**
Detailed multi-language instruction manuals, including drawings, show the correct way to assemble the structures and the components inside them. User compliance with manufacturer instructions allows the set-up of correctly selected and assembled electrical enclosures which conform to EN 60439-1 and the new 61439-1-2 (CEI 17/13-1) in accordance with the European Community Low Voltage Directive (Directive 2006/95/ EC which substitutes 73/23/EEC and subsequent amendments.

## Chapter 2
IS2 - IS2 EMC enclosures

### IS2 enclosure

**2**–2 **Main characteristics**

**2**–10 **Composition of the series**

**2**–12 **Selection of the structure pre-assembled cabinets**

**2**–22 **Selection of the structure kit version cabinets**

**2**–34 **Ordering codes**

**2**–36 **Pre-assembled structures**

**2**–48 **Kit versions structures**

**2**–56 **Completion of structures**

**2**–118 **Examples of configuration**

### IS2 EMC enclosure

**2**–136 **Main characteristics**

**2**–141 **Selection of the structure**

**2**–142 **Ordering codes**

# IS2 Enclosures
## Main characteristics

ABB completes its offer of cabinets for automation with the IS2 series, also available in the kit version. The IS2 enclosures are suitable for making electrical automation, control and operation enclosures.

The IS2 enclosures are suitable for making electrical automation, control and operation enclosures, with the possibility of constructing batteries of cabinets side by side to control complex industrial plants.

They are suitable for floor mounting with the possibility of lateral and rear access and adjustment of the back plate position.

**Versions available**
The IS2 cabinets are available in the following versions:
- Cabinet with blind door
- Cabinet with glazed door
- Cabinet with 19” rack frame “L” shaped profile, full height fixed and full height or partial swing
- Cabinet with 19” full height or partial fixed rack cranked shaped uprights and full height swing “C” shaped profile
- Cabinet for PC
- Cabinet with console
- Cabinet with compartments
- Cabinet for modular apparatus





# IS2 Enclosures
## Main characteristics

Main characteristics and applications for IS2 enclosures.

**Cabinet with blind or glazed door**
The frame of the enclosure consists of galvanised sheet uprights and pickled sheet panelling with a min. thickness of 1,5mm. The parts made of pickled sheet are painted with 60÷70 micron thick polyester epoxy powder paint of standard medium orange peel grey RAL 7035. The painting can be worked (drilled) without chipping. Other colours are also available on request. Equipotentiality of the structure is obtained automatically during the assembly stage. Placing two or more structures side by side is a simple operation, using the minimum possible number of accessories.



The structure can be fitted with accessories as follows:
- Vertical blind separator between columns, which ensures the degree of protection
- Separator for 24-pole connectors (staggered assembly between the rows) and relative accessories (closure plates, reduction for the 16-10-6 pole versions).
- Lateral incoming cable structure W=300mm D=500-600-800mm- 1000mm – can be fitted with the separators described above.

The dimensions referred to conform to DIN 41488, and should be considered as external.

**Uprights**
The upright section is of the closed type and provides excellent resistance to mechanical stresses whilst still keeping the max. dimensions of 47x47mm.

They are drilled with 25mm pitch (in conformity with the DIN 43660 Standard) and allow the accessories to be fixed using M6 self-threading screws and cage nuts.

The multipurpose hinges for fixing the doors allow several structures to be placed side by side, and also to make corner batteries.



There is also an intermediate upright, which allows structures with various compartments to be made (e.g. structure W=800 divided into 600+200mm).
For the structures with width ≥1000mm, the upright can be removed to facilitate access.

**The roof is of the removable type and can be fitted with air conditioner, ventilation hoods, top cable connection compartment.**

**The flanges are supplied loose and their assembly is carried out from the front of the enclosure, using two screws**.

**Base, top and plinth**
The base has openings which allow cable entry from below, and has different types of flanges:
- guillotine sliding, complete with gasket
- in several pieces of different sizes to be removed or drilled
- completely closed by a single large flange (2,00mm thickness), which can be drilledto house fairlead membranes or for direct entry of large cable bundles.

It can also be fitted with supporting crosspieces for heavy users (e.g. transformers max. 500Kg)
Various types of plinths are available:

- Standard: 2,5mm angle pieces + 1,00mm flange made of pickled sheet and painted grey orange peel RAL 7012 colour, H=100mm. The flanges are supplied loose. Their assembly is carried out from the front of the enclosure, using two self-threading screws. The angle pieces are fixed to the structure with two bolts placed diagonally to prevent any rotations during handling. Handling can be carried out using transpallet seven when there are two structures side by side.
- Raised H=200mm: this keeps the same characteristics as the previous one and consists of two superimposed angle pieces H=100mm and relative cover flange H=100mm.
- Supporting: able to support the weight of the structure (≈ 300kg loaded) and handle it by means of rollers. Versions H=100mm.



The plinth can be replaced by the following series of accessories:

- Levelling feet (500kg max. weight)
- Free and braked type wheels (70kg max. weight)
- Single: on request the plinth can be made in a single piece, equal to the whole

perimeter of the enclosures mounted in a battery.
The angle pieces are provided with M12 holes for fixing to the floor.

**The blind door is fitted with reinforced galvanised tube and drilled with 25mm pitch, earthing pins (M6) located in the two corners close to the hinges. The transparent door is fitted with safety glass 4 mm thick screen-printed and with earthed pins.**

**Door**
The reversible type doors (right or left opening) are made of 2,00mm thick pickled sheet, and can be mounted on the four sides with an opening angle of 120° for the front ones, even in the case of several structures side by side. The side doors have a maximum opening angle of 100°. Both handles are fitted with different types of key locks.
Furthermore the doors are fitted with the following series of accessories:

- Hinges with 180° opening
- Door stop in the open position for the 180° version as well
- Release microswitch
- Voltage indication lamp
- Ventilation Kit
- Swivel work surface (only for doors W=600 and 800mm), which can be mounted on the reinforcement bar
- RAL7035 colour vertical and horizontal A3 format metal document pocket (only for doors W=600-800-1000mm), which can be mounted on the reinforcement bar
- A4 format plastic document pocket
- Crosspieces on the inside of the door, for horizontal connection between reinforcement tubes, for fixing the wiring duct or other accessories.
- Aluminium openable windows for control panels fitted with door and key.
- Inner door, to be mounted at the same time as the front door.

This can house the main components, such as handles for switch-disconnectors/circuitbreakers, mushroom-head pushbuttons and various different pushbuttons.



# IS2 Enclosures
## Main characteristics

**Large functional plate**
The structure of the large plate is particularly sturdy, it can support loads up to a total of 500kg without undergoing any deformation. Made of galvanised sheet (2,5mm thick), it is mounted on sliding blocks, which facilitate its insertion in the enclosure in all of the following ways:

- From the front
- From the side
- From the rear
- Two “back-to-back” plates; also in the version with opposed plate
- Fully to the rear, placed inside the uprights on the same level as these.



The plates, which can be adjusted in depth every 25mm, have the same heights and can be in one of the following versions:

- Standard: with insertion from the front or rear. Joining with another plate is carried ou using the special kit. Insertion from the side is possible by means of sliding tracks.
- Oversized: in this case the useful width is the same as the width of the structure. Assembly can only be from the side and is carried out thanks to the special tracks. The oversized plate can be adjusted in depth to exploit the useful space to the maximum without interfering with the side-by-side kit. It can be joined to other plates with the help of few accessories which can be mounted from the front.
- Partial: adjustable in depth, this is installed using accessories.The back plates can be fitted with rear reinforcement crosspieces.

**In the cabinets with glazed doors, the useful space between the glass and panels/inner door allows assembly of most of the components, among which: fixed circuit-breakers with transmitted rotary operation, OESA-OETL switch-disconnectors, Tmax circuitbreakers, and various pushbuttons.**

**Cabinet with 19” rack frame**
The following types of frame are available:

- Fixed: adjustable in depth with 25mm pitch, able to support a maximum load of 90Kg. With 38, 42, 47 HE module capacity for enclosures 1800, 2000, 2200mm high respectively, width 600, 800mm.
- Swing: in the versions for off-centre mounting in structures with W=800mm and centred in structures with W =600mm with a capacity of 36, 40, 45 HE modules respectively for 1800, 2000 and 2200mm heights.
- Partial swing: with 9, 18, 27 HE module capacity, for frames 500, 900, 1300mm high
- respectively.

The rack frames are completed with the special blind closure panels with dimensions from 1 HE to 20 HE.from 1 HE to 20 HE.



**Cabinet with 19'' rack frame fixed with cranked shaped profile, swing decentralized "C" shaped profile and accessories**

Other fastening systems for rack 19'' are available, provided with new accessories on catalogue:

- Fixed: fastening systems for rack 19'' with fixed cranked shaped profile uprights at ful height in enclosure W=600mm and W=800mm, capacity 38/42/47 HE
- Partial fixed: fastening systems for rack 19'' with fixed cranked shaped profile uprights at partial height in enclosure W=600mm and W=800mm, capacity 9/18/27 HE
- Swing: decentralized rack frame with swing decentralized "C" shaped profile for W=800mm, capacity 36/41/45 HE.

Brackets for fixing in W=600mm and W=800mm are available, crosspieces have dedicated slots for the passage of cables and for the ducts fixing. Support for accessories, universal fixed, adjustable in deep or removable shelves plus DIN-rail codes are included in ABB offer for those codes.

**Cabinet with compartments**

The IS2 range also covers construction of versions with cells or compartments.
The compartments, available in heights multiples of 100mm up to maximum of 800mm, allow Form 3a type segregation to be obtained.
The galvanised sheet back plate can be removed to facilitate assembly of the apparatus.
The side parts of the compartment are presheared for passage of the conductors.

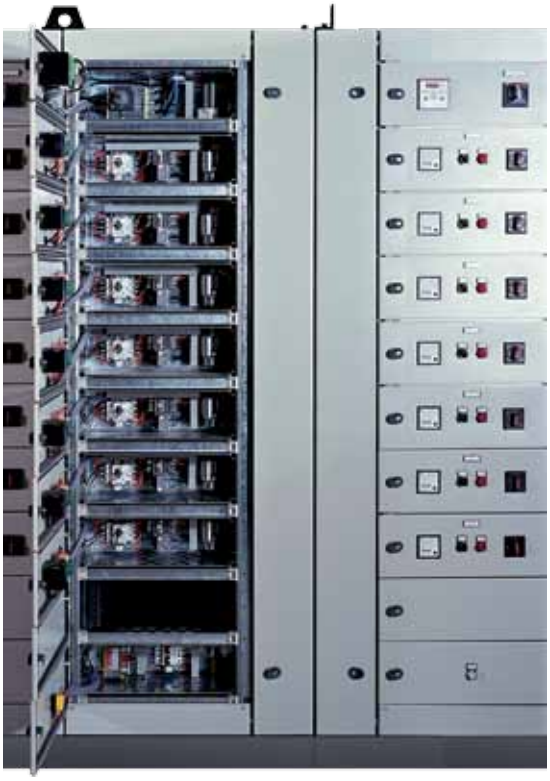

**The cabinet is fitted with a glazed door for the video part and can take screens up to 17" in size.**

**Cabinet for PC**

In this configuration, the cabinet is fitted with a glazed door for the video part and can take screens up to 17" in size. The window only regards the screen part. The part relative to the CPU is located behind the keyboard surface, accessible through a lift-up top fitted with a key lock.
The PC cabinet can be placed alongside the basic structures. Available in 1800 and 2000mm heights, 600mm width, and 600/800mm depth.

**Cabinet with console**

The structure is fitted with a section dedicated to a console. The versions available are with blind or glazed door.



**Cabinet for modular configurations**

In the 600 and 800mm widths (24 and 36 DIN modules) without cable compartment and in the 800/1000/1200mm widths with internal cable compartment W=200 or 400mm, the IS2 cabinets can be fitted with modular panels.

The modular panels are available in the version with DIN drilling (for one or three rows of modular apparatus), in the blind version and for 72x72mm and 96x96mm measuring instruments. All the panels have vertical modularity of 150 or 200mm and are available in the fixed or hinged version by means of an accessory.

# IS2 Enclosures
## Main characteristics

Installation of Tmax moulded-case circuit-breakers is possible by means of a back plate and blind panels.
Installation of the modular panels in the IS2 cabinets requires the use of the special uprights for IS2 Enclosures for Automation.
Modular panels are screwed onto the structure of the cabinet.
Alternatively an assembly of the apparatus on an oversized back plate is possible by means of dedicated uprights.



The modular versions are also fitted with the following series of accessories:
- Hole cover W=2000mm grey RAL 7035 colour
- Adhesive circuit identification label holders
- Distribution frames

**In the 600 and 800mm widths (24 and 36 DIN modules) without cable riser and in the 800/1000/1200mm widths with internal cable riser W=200 or 400mm, the IS2 cabinets can be fitted with modular panels.**

**Air conditioners/fans**
There are several solutions for air conditioning and ventilation cabinets:
- Air conditioners, ultra-thin (max depth 105 mm) for wall mounting, IP54, 230 V, 50/60 Hz, 400 V 50 Hz, 460 V 60 Hz, RAL 7035, with a cooling capacity from 1900 W to
- 2940 W.
- Air conditioners for wall or door mounting, 230V 50/60Hz, RAL 7035 with cooling power of 600 W to 2200 W.
- Heat exchangers (air - air) for wall mounting, IP54, 230 V 50/60 Hz, RAL 7035 with cooling power from 35 W to 85 W.
- Natural ventilation kit through Kit for the raising of the roof IP 20 and grid
- Natural ventilation kit through grid IP21/IP54
- Forced ventilation kit through input grid and output fan on the wall or hood outlet on the roof, IP23 / IP54, 7035, 230V / 115V, 50/60Hz with reversible flow, flow rate of 23 $m^3$/h 590 $m^3$/h.
- Heater IP20, with 110/230V power supply 50/60 Hz
- Thermostat with 110V, 250V power supply 50/60 Hz





**Accessories**

Apart from the accessories dedicated to making up some versions, the following are available for the whole range:

- Reinforcement crosspieces for transformers, able to support weights of 500kg.
- They are placed at the back of the structure in depth
- Reinforcement crosspieces/various applications, which can be mounted both in depth and in width (H=48-100mm). They are independent of the dimensions of the structure and can be positioned both inside and outside the uprights
- "C" guides in depth for mounting DIN rails and blind back plates
- Blind panels (H=50-100-150-200-400-600mm) and DIN cut-outs (H=150- 200mm)
- Lamps for enclosure internal lighting, to be installed directly on the upright placed under the roof. They can be of two types: 8-13W fluorescent tube with 220- 240V 50/60Hz power supply, or 11W version with integrated UNEL socket
- "Duct" type accessory able to shield the power cables from the signal cables
- Busbar system

| **Technical characteristics** | | |
|---|---|---|
| Conformity with Standard | | IEC 62208, IEC 60439-1, IEC 61439-1-2 |
| Degree of protection | | IP65 (IEC 60529) with fixed flange TYPE 12 (UL Standard) |
| Degree of mechanical strength | | IK10 blind door |
| | | IK09 glazed door |
| | | (IEC 62262) |
| Certifications | | E143042 c UL US LISTED (*) ⟨Ex⟩ II 3 D Ex tc IIIC T75°C Dc U ⟨Ex⟩ II 3 G Ex nA T6 Gc U |
| Type of material | | Metallic |
| Installation site | | Indoors |
| Fixing method | | floor |
| Normal service conditions<br>- ambient temperature | | from –5 to +40° C |
| Operating climate (t°/Ur%) | costant | 23°C/83% - 40°C/93% |
| | variable | 23°C/98% - 40°C/98% |
| Vibration test | | In accordance with Standard IEC 60068-2-57 |
| Seismic withstand capability test | | In accordance with Standard IEE Std 693 |

(*) UL listed for structures IP65 with plain doors assembled in the factory. Loose compenents are UL recognized according to UL regulation.

# IS2 Enclosures

## Composition of the series

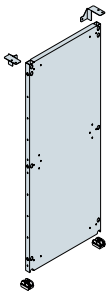
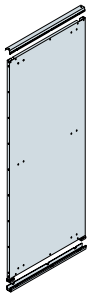

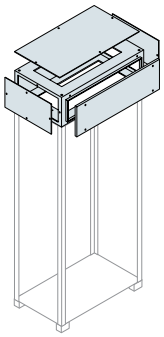
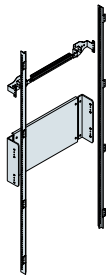

| Dimensions (mm) | | | Back plates | | | | |
|---|---|---|---|---|---|---|---|
| **H** | **D** | **W** | **Standard** | **Oversized** | **Inner door*** | **Top cable connection cont.** | **Modular DIN structure** |
| 1400** | 400 | 300 | | | | | |
| 1600** | | 400 | ✓ | | | ✓ | |
| 1800 | | 600 | ✓ | ✓ | ✓ | ✓ | ✓ |
| 2000 | | 800 | ✓ | ✓ | ✓ | ✓ | ✓ |
| 2200 | | 1000 | ✓ | ✓ | ✓ | ✓ | ✓ + cable cont. |
| | | 1200 | ✓ | ✓ | | ✓ | ✓ + cable cont. |
| | 500 | 300 | | | | | |
| | | 400 | ✓ | ✓ | | ✓ | |
| | | 600 | ✓ | ✓ | ✓ | ✓ | ✓ |
| | | 800 | ✓ | ✓ | ✓ | ✓ | ✓ |
| | | 1000 | ✓ | ✓ | ✓ | ✓ | ✓ + cable cont. |
| | | 1200 | ✓ | ✓ | | ✓ | ✓ + cable cont. |
| | | 1600 | ✓ | | | ✓ | |
| | 600 | 300 | | | | | |
| | | 400 | ✓ | ✓ | | ✓ | |
| | | 600 | ✓ | ✓ | ✓ | ✓ | ✓ |
| | | 800 | ✓ | ✓ | ✓ | ✓ | ✓ |
| | | 1000 | ✓ | ✓ | ✓ | ✓ | ✓ + cable cont. |
| | | 1200 | ✓ | ✓ | | ✓ | ✓ + cable cont. |
| | | 1600 | ✓ | | | ✓ | |
| | 800 | 300 | | | | | |
| | | 400 | ✓ | ✓ | | ✓ | |
| | | 600 | ✓ | ✓ | ✓ | ✓ | ✓ |
| | | 800 | ✓ | ✓ | ✓ | ✓ | ✓ |
| | | 1000 | ✓ | ✓ | ✓ | ✓ | ✓ + cable cont. |
| | | 1200 | ✓ | ✓ | | ✓ | ✓ + cable cont. |
| | | 1600 | ✓ | | | ✓ | |
| | 1000 | 300 | | | | | |
| | | 400 | ✓ | ✓ | | ✓ | |
| | | 600 | ✓ | ✓ | ✓ | ✓ | ✓ |
| | | 800 | ✓ | ✓ | ✓ | ✓ | ✓ |
| | | 1000 | ✓ | ✓ | ✓ | ✓ | ✓ |

* For H=1400 and 1600mm inner doors, please contact ABB.

** Cable compartment not available for structures H=1400/1600mm.

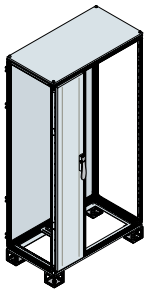
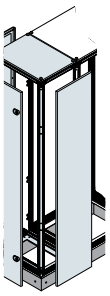
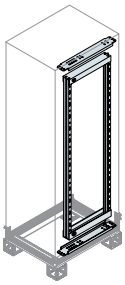
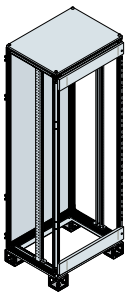
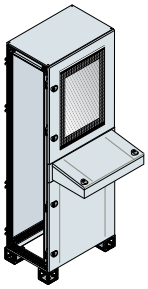
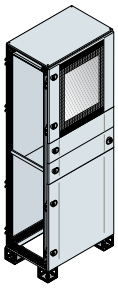
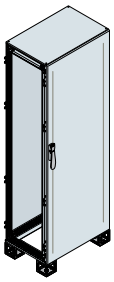

| Cable container Internal W=200mm | Internal W=400mm | External W=300mm | 19” rack structures | Structures with compartments | Cabinet with console | Cabinet for computer | IS2 EMC |
|---|---|---|---|---|---|---|---|
| | | ✓ | | | | | |
| | | | | | | | |
| | | | ✓ | ✓ | ✓ | | |
| ✓ | | | ✓ | ✓ | ✓ | | |
| ✓ | ✓ | | | ✓ + cable cont. | | | |
| | ✓ | | | ✓ + cable cont. | | | |
| | | ✓ | | | | | |
| | | | | | | | |
| | | | ✓ | ✓ | ✓ | | |
| ✓ | | | ✓ | ✓ | ✓ | | |
| ✓ | ✓ | | | ✓ + cable cont. | | | |
| | ✓ | | | ✓ + cable cont. | | | |
| | | ✓ | | | | | |
| | | | | | | | |
| | | | | | | | |
| | | | ✓ | ✓ | ✓ | ✓ | ✓ (1) |
| ✓ | | | ✓ | ✓ | ✓ | | ✓ (1) |
| ✓ | ✓ | | | ✓ + cable cont. | | | |
| | ✓ | | | ✓ + cable cont. | | | |
| | | | | | | | |
| | | ✓ | | | | | |
| | | | | | | | |
| | | | ✓ | ✓ | ✓ | ✓ | ✓ (1) |
| ✓ | | | ✓ | ✓ | ✓ | | ✓ (1) |
| ✓ | ✓ | | | ✓ + cable cont. | | | |
| | ✓ | | | ✓ + cable cont. | | | |
| | | | | | | | |
| | | ✓ | | | | | |
| | | | | | | | |
| | | | ✓ | ✓ | | | |
| ✓ | | | ✓ | ✓ | | | |
| ✓ | ✓ | | | ✓ + cable cont. | | | |

(1) Only H=2000mm

# Pre-assembled IS2 Cabinets

## Selection of the structure - H=1400

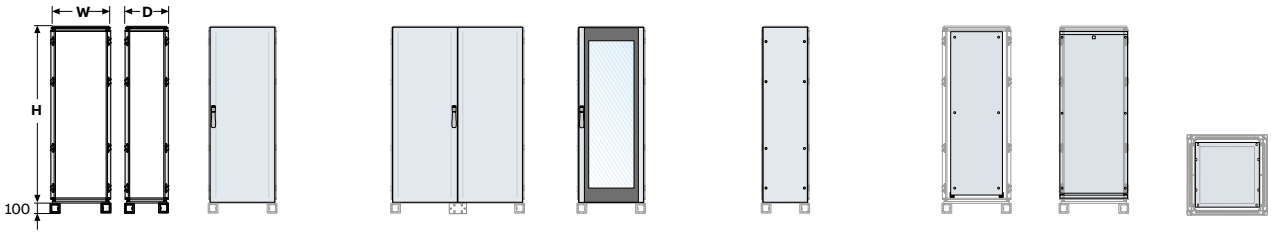


| External dimensions | | | | | | | | | |
|---|---|---|---|---|---|---|---|---|---|
| (H) [1] mm | (W) mm | (D) mm | Pre assembled structure with blind door and rear panel | Pre assembled structure with blind double door | Pre assembled structure with glass door and rear panel | Side panel | Standard mounting plate | Oversized mounting plate + rails | Fixed cable entry flanges |
| 1400 | 400 | 400 | 1STQ005349B0000 | - | - | EL1440K | EA1440 | EA1540 | EF4042 |
| | | 600 | 1STQ005361B0000 | - | - | EL1460K | EA1440 | EA1540 | EF4063 |
| | | 800 | 1STQ005365B0000 | - | - | EL1480K | EA1440 | EA1540 | EF4082 |
| | 600 | 300 | 1STQ005346B0000 | - | - | 1STQ005322B0000 | EA1460 | EA1560 | 1STQ005426B0000 |
| | | 400 | 1STQ005350B0000 | - | 1STQ005355B0000 | EL1440K | EA1460 | EA1560 | EF6043 |
| | | 500 | 1STQ005357B0000 | - | - | 1STQ005323B0000 | EA1460 | EA1560 | EF6052 |
| | | 600 | 1STQ005362B0000 | - | - | EL1460K | EA1460 | EA1560 | EF6062 |
| | | 800 | 1STQ005366B0000 | - | - | EL1480K | EA1460 | EA1560 | EF6082 |
| | 800 | 300 | 1STQ005347B0000 | - | 1STQ005354B0000 | 1STQ005322B0000 | EA1480 | EA1580 | 1STQ005427B0000 |
| | | 400 | 1STQ005351B0000 | - | 1STQ005356B0000 | EL1440K | EA1480 | EA1580 | EF8042 |
| | | 500 | 1STQ005358B0000 | - | - | 1STQ005323B0000 | EA1480 | EA1580 | EF8052 |
| | | 600 | 1STQ005363B0000 | - | - | EL1460K | EA1480 | EA1580 | EF8062 |
| | | 800 | 1STQ005367B0000 | - | - | EL1480K | EA1480 | EA1580 | EF8082 |
| | 1000 | 300 | 1STQ005348B0000 | - | - | 1STQ005322B0000 | EA1411 | - | 1STQ005428B0000 |
| | | 400 | 1STQ005352B0000 | - | - | EL1440K | EA1411 | - | EF1042 |
| | | 500 | 1STQ005359B0000 | - | - | 1STQ005323B0000 | EA1411 | - | EF1052 |
| | 1200 | 400 | - | 1STQ005353B0000 | - | EL1440K | EA1412 | EA1512 | 2xEF6043 |
| | | 500 | - | 1STQ005360B0000 | - | 1STQ005323B0000 | EA1412 | EA1512 | 2xEF6052 |
| | | 600 | - | 1STQ005364B0000 | - | EL1460K | EA1412 | EA1512 | 2xEF6062 |
| | | 800 | - | 1STQ005368B0000 | - | EL1480K | EA1412 | EA1512 | 2xEF6082 |

[1] The useful height is always 100mm less than the external dimension of the enclosure. For the version with compartments, the useful height is 200mm less.
For H=1400 inner doors, please contact ABB.





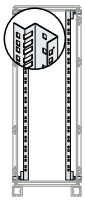
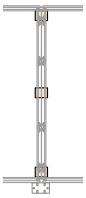
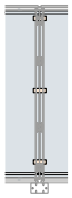

| Sliding cable entry flanges | Build-up cable entry flanges | Plinth flanges front/rear | Plinth flanges side | 19" Fixed cranked shaped uprights Frame+Fixing kit | Side-by-side structure Kit | Oversized platejoining Kit |
|---|---|---|---|---|---|---|
| EF4040 | EF4041 | ZN4000 | ZN4000 | - | EV0002<br>EV0003<br>EV0006 | EA2113 |
| EF4060 | EF4061 | ZN4000 | ZN6000 | - | | |
| EF4080 | EF4081 | ZN4000 | ZN8000 | - | | |
| - | - | ZN6000 | ZN3000 | 1STQ005332B0000+EB6000 | EV0002<br>EV0003<br>EV0006 | EA2113 |
| EF6040 | EF6041 | ZN6000 | ZN4000 | 1STQ005332B0000+EB6000 | | |
| EF6050 | EF6051 | ZN6000 | ZN5000 | 1STQ005332B0000+EB6000 | | |
| EF6060 | EF6061 | ZN6000 | ZN6000 | 1STQ005332B0000+EB6000 | | |
| EF6080 | EF6081 | ZN6000 | ZN8000 | 1STQ005332B0000+EB6000 | | |
| - | - | ZN8000 | ZN3000 | 1STQ005332B0000+EB8000 | EV0002<br>EV0003<br>EV0006 | EA2113 |
| EF8040 | EF8041 | ZN8000 | ZN4000 | 1STQ005332B0000+EB8000 | | |
| EF8050 | EF8051 | ZN8000 | ZN5000 | 1STQ005332B0000+EB8000 | | |
| EF8060 | EF8061 | ZN8000 | ZN6000 | 1STQ005332B0000+EB8000 | | |
| EF8080 | EF8081 | ZN8000 | ZN8000 | 1STQ005332B0000+EB8000 | | |
| - | - | ZN1000 | ZN3000 | - | EV0002<br>EV0003<br>EV0006 | EA2113 |
| EF1040 | EF1041 | ZN1000 | ZN4000 | - | | |
| EF1053 | EF1051 | ZN1000 | ZN5000 | - | | |
| 2xEF6040 | 2xEF6041 | 2xZN6000 | ZN4000 | - | EV0002<br>EV0003<br>EV0006 | EA2113 |
| 2xEF6051 | 2xEF6051 | 2xZN6000 | ZN5000 | - | | |
| 2xEF6060 | 2xEF6061 | 2xZN6000 | ZN6000 | - | | |
| 2xEF6080 | 2xEF6081 | 2xZN6000 | ZN8000 | - | | |

• Ordering codes 2–34 • In-depth technical information page 4–1 • Overall dimensions page 5–1

# Pre-assembled IS2 Cabinets

## Selection of the structure - H=1600

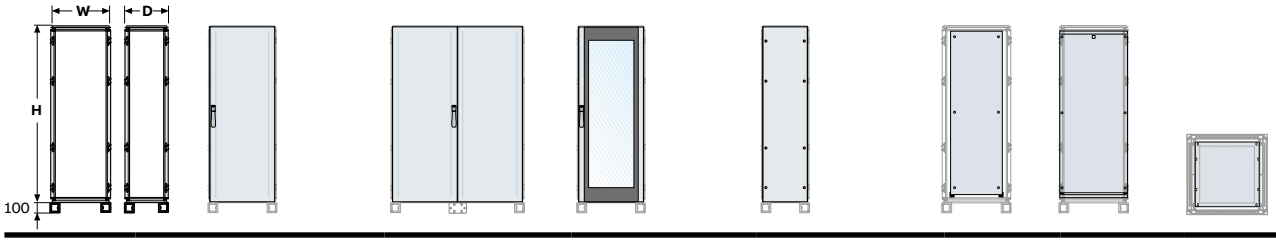


| External dimensions (H) [1] mm | (W) mm | (D) mm | Pre assembled structure with blind door and rear panel | Pre assembled structure with blind double door | Pre assembled structure with glass door and rear panel | Side panel | Standard mounting plate | Oversized mounting plate + rails | Fixed cable entry flanges |
|---|---|---|---|---|---|---|---|---|---|
| 1600 | 400 | 500 | 1STQ005377B0000 | - | - | EL1650K | EA1640 | EA1740 | EF4052 |
| | | 600 | 1STQ005382B0000 | - | - | EL1660K | EA1640 | EA1740 | EF4063 |
| | | 800 | 1STQ005387B0000 | - | - | EL1680K | EA1640 | EA1740 | EF4082 |
| | | 1000 | 1STQ005392B0000 | - | - | EL1610K | EA1640 | EA1740 | EF4012 |
| | 600 | 300 | 1STQ005369B0000 | - | - | 1STQ005324B0000 | EA1616 | EA1760 | 1STQ005426B0000 |
| | | 400 | 1STQ005371B0000 | - | 1STQ005375B0000 | 1STQ005325B0000 | EA1616 | EA1760 | EF6043 |
| | | 500 | 1STQ005378B0000 | - | - | EL1650K | EA1616 | EA1760 | EF6052 |
| | | 600 | 1STQ005383B0000 | - | - | EL1660K | EA1616 | EA1760 | EF6062 |
| | | 800 | 1STQ005388B0000 | - | - | EL1680K | EA1616 | EA1760 | EF6082 |
| | | 1000 | 1STQ005393B0000 | - | - | EL1610K | EA1616 | EA1760 | EF6012 |
| | 800 | 300 | 1STQ005370B0000 | - | - | 1STQ005324B0000 | EA1619 | EA1780 | 1STQ005427B0000 |
| | | 400 | 1STQ005372B0000 | - | 1STQ005376B0000 | 1STQ005325B0000 | EA1619 | EA1780 | EF8042 |
| | | 500 | 1STQ005379B0000 | - | - | EL1650K | EA1619 | EA1780 | EF8052 |
| | | 600 | 1STQ005384B0000 | - | - | EL1660K | EA1619 | EA1780 | EF8062 |
| | | 800 | 1STQ005389B0000 | - | - | EL1680K | EA1619 | EA1780 | EF8082 |
| | | 1000 | 1STQ005394B0000 | - | - | EL1610K | EA1619 | EA1780 | EF8012 |
| | 1000 | 400 | 1STQ005373B0000 | - | - | 1STQ005325B0000 | EA1610 | EA1710 | EF1042 |
| | | 500 | 1STQ005380B0000 | - | - | EL1650K | EA1610 | EA1710 | EF1052 |
| | | 600 | 1STQ005385B0000 | - | - | EL1660K | EA1610 | EA1710 | EF1062 |
| | | 800 | 1STQ005390B0000 | - | - | EL1680K | EA1610 | EA1710 | EF1082 |
| | | 1000 | 1STQ005395B0000 | - | - | EL1610K | EA1610 | EA1710 | EF1012 |
| | 1200 | 400 | - | 1STQ005374B0000 | - | 1STQ005325B0000 | EA1612 | EA1712 | 2xEF6043 |
| | | 500 | - | 1STQ005381B0000 | - | EL1650K | EA1612 | EA1712 | 2xEF6052 |
| | | 600 | - | 1STQ005386B0000 | - | EL1660K | EA1612 | EA1712 | 2xEF6062 |
| | | 800 | - | 1STQ005391B0000 | - | EL1680K | EA1612 | EA1712 | 2xEF6082 |

[1] The useful height is always 100mm less than the external dimension of the enclosure. For the version with compartments, the useful height is 200mm less.
For H=1600 inner doors, please contact ABB.




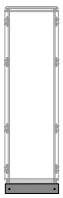
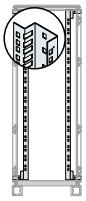
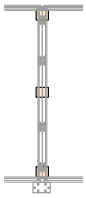


| Sliding cable entry flanges | Build-up cable entry flanges | Plinth flanges front/rear | Plinth flanges side | 19" Fixed cranked shaped uprights Frame+Fixing kit | Side-by-side structure Kit | Oversized platejoining Kit |
|---|---|---|---|---|---|---|
| EF4050 | EF4051 | ZN4000 | ZN5000 | - | EV0002<br>EV0003<br>EV0006 | EA2113 |
| EF4060 | EF4061 | ZN4000 | ZN6000 | - | | |
| EF4080 | EF4081 | ZN4000 | ZN8000 | - | | |
| EF4010 | EF4011 | ZN4000 | ZN1000 | - | | |
| - | - | ZN6000 | ZN3000 | 1STQ005333B0000+EB6000 | EV0002<br>EV0003<br>EV0006 | EA2113 |
| EF6040 | EF6041 | ZN6000 | ZN4000 | 1STQ005333B0000+EB6000 | | |
| EF6050 | EF6051 | ZN6000 | ZN5000 | 1STQ005333B0000+EB6000 | | |
| EF6060 | EF6061 | ZN6000 | ZN6000 | 1STQ005333B0000+EB6000 | | |
| EF6080 | EF6081 | ZN6000 | ZN8000 | 1STQ005333B0000+EB6000 | | |
| EF6010 | EF6011 | ZN6000 | ZN1000 | 1STQ005333B0000+EB6000 | | |
| - | - | ZN8000 | ZN3000 | 1STQ005333B0000+EB8000 | EV0002<br>EV0003<br>EV0006 | EA2113 |
| EF8040 | EF8041 | ZN8000 | ZN4000 | 1STQ005333B0000+EB8000 | | |
| EF8050 | EF8051 | ZN8000 | ZN5000 | 1STQ005333B0000+EB8000 | | |
| EF8060 | EF8061 | ZN8000 | ZN6000 | 1STQ005333B0000+EB8000 | | |
| EF8080 | EF8081 | ZN8000 | ZN8000 | 1STQ005333B0000+EB8000 | | |
| EF8080 | EF8081 | ZN8000 | ZN1000 | 1STQ005333B0000+EB8000 | | |
| EF1040 | EF1041 | ZN1000 | ZN4000 | - | EV0002<br>EV0003<br>EV0006 | EA2113 |
| EF1053 | EF1051 | ZN1000 | ZN5000 | - | | |
| EF1060 | EF1061 | ZN1000 | ZN6000 | - | | |
| EF1080 | EF1081 | ZN1000 | ZN8000 | - | | |
| EF1010 | EF1011 | ZN1000 | ZN1000 | - | | |
| 2xEF6040 | 2xEF6041 | 2xZN6000 | ZN4000 | - | EV0002<br>EV0003<br>EV0006 | EA2113 |
| 2xEF6051 | 2xEF6051 | 2xZN6000 | ZN5000 | - | | |
| 2xEF6060 | 2xEF6061 | 2xZN6000 | ZN6000 | - | | |
| 2xEF6080 | 2xEF6081 | 2xZN6000 | ZN8000 | - | | |

• Ordering codes 2–34 • In-depth technical information page 4–1 • Overall dimensions page 5–1

# Pre-assembled IS2 Cabinets

## Selection of the structure - H=1800

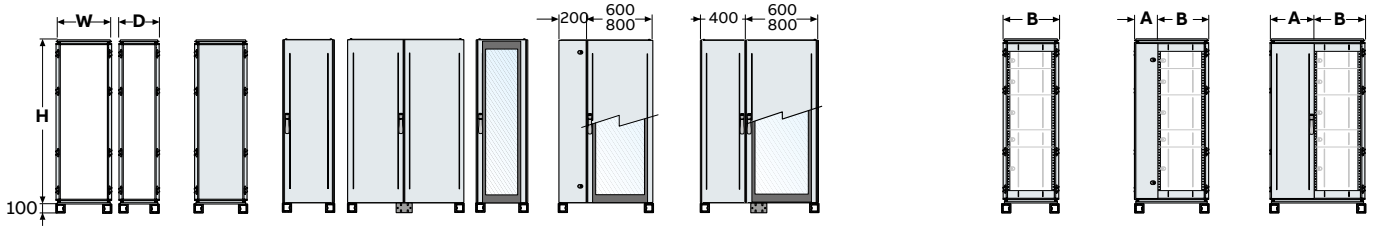


| External dimensions | | | Cabinet with door | | | | Cabinet with cable container | | | | Cabinet with compartments [7] | | | | | | |
|---|---|---|---|---|---|---|---|---|---|---|---|---|---|---|---|---|---|
| (H)[*] mm | (W) mm | (D) mm | Cabinet without door | Blind door | Double blind with overload closure [1] | Glazed door | Blind door with cable container W=200mm | Blind door with cable container W=400mm | Glazed door with cable container W=200mm | Glazed door with cable container W=400mm | | Width (mm) A | B | | Width (mm) A | B |
| 1800 | 400 | 400 | - | ES1844K | - | - | - | - | - | - | - | - | - | - | - | - |
| | 600 | | ES1864SPK | ES1864K | - | ES1864VK | - | - | - | - | ES1864MFK | - | 600 | - | - | - |
| | 800 | | ES1884SPK | ES1884K | - | ES1884VK | ES1884FV2K | - | ES1884VC2K | - | ES1884MF2K | 200 | 600 | ES1884MFK | - | 800 |
| | 1000 | | - | ES1804K | ES1814BK | ES1804VK | ES1804FV2K | ES1804FV4K | ES1804VC2K | ES1804VC4K | ES1804MF4K | 400 | 600 | ES1804MF2K | 200 | 800 |
| | 1200 | | - | - | ES1824BK | ES1824VK[**] | - | ES1824FV4K | - | ES1824VC4K | - | - | - | ES1824MF4K | 400 | 800 |
| | 400 | 500 | - | ES1845K | - | - | - | - | - | - | - | - | - | - | - | - |
| | 600 | | ES1865SPK | ES1865K | - | ES1865VK | - | - | - | - | ES1865MFK | - | 600 | - | - | - |
| | 800 | | - | ES1885K | - | ES1885VK | ES1885FV2K | - | ES1885VC2K | - | ES1885MF2K | 200 | 600 | ES1885MFK | - | 800 |
| | 1000 | | - | ES1805K | ES1815BK | ES1805VK | ES1805FV2K | ES1805FV4K | ES1805VC2K | ES1805VC4K | ES1805MF4K | 400 | 600 | ES1805MF2K | 200 | 800 |
| | 1200 | | - | - | ES1827BK | ES1825VK[**] | - | ES1825FV4K | - | ES1825VC4K | - | - | - | ES1825MF4K | 400 | 800 |
| | 1600[6] | | - | - | ES1875BK | - | - | - | - | - | - | - | - | - | - | - |
| | 400 | 600 | - | ES1846K | - | - | - | - | - | - | - | - | - | - | - | - |
| | 600 | | ES1866SPK | ES1866K | - | ES1866VK | - | - | - | - | ES1866MFK | - | 600 | - | - | - |
| | 800 | | ES1886SPK | ES1886K | - | ES1886VK | ES1886FV2K | - | ES1886VC2K | - | ES1886MF2K | 200 | 600 | ES1886MFK | - | 800 |
| | 1000 | | - | ES1806K | ES1816BK | ES1806VK | ES1806FV2K | ES1806FV4K | ES1806VC2K | ES1806VC4K | ES1806MF4K | 400 | 600 | ES1806MF2K | 200 | 800 |
| | 1200 | | - | - | ES1826BK | ES1826VK[**] | - | ES1826FV4K | - | ES1826VC4K | - | - | - | ES1826MF4K | 400 | 800 |
| | 1600[6] | | - | - | ES1876BK | - | - | - | - | - | - | - | - | - | - | - |
| | 400 | 800 | - | ES1848K | - | - | - | - | - | - | - | - | - | - | - | - |
| | 600 | | - | ES1868K | - | ES1868VK | - | - | - | - | ES1868MFK | - | 600 | - | - | - |
| | 800 | | - | ES1888K | - | ES1888VK | ES1888FV2K | - | ES1888VC2K | - | ES1888MF2K | 200 | 600 | ES1888MFK | - | 800 |
| | 1000 | | - | ES1808K | ES1818BK | ES1808VK | ES1808FV2K | ES1808FV4K | ES1808VC2K | ES1808VC4K | ES1808MF4K | 400 | 600 | ES1808MF2K | 200 | 800 |
| | 1200 | | - | - | ES1828BK | ES1828VK[**] | - | ES1828FV4K | - | ES1828VC4K | - | - | - | ES1828MF4K | 400 | 800 |
| | 1600[6] | | - | - | ES1878BK | - | - | - | - | - | - | - | - | - | - | - |
| | 400 | 1000 | - | ES1840K | - | - | - | - | - | - | - | - | - | - | - | - |
| | 600 | | - | ES1860K | - | ES1860VK | - | - | - | - | ES1860MFK | - | 600 | - | - | - |
| | 800 | | - | ES1880K | - | ES1880VK | - | - | - | - | ES1880MF2K | 200 | 600 | ES1880MFK | - | 800 |
| | 1000 | | - | ES1800K | ES1810BK | ES1800VK | - | - | - | - | ES1800MF4K | 400 | 600 | ES1800MF2K | 200 | 800 |

[*] The useful height is always 100mm less than the external dimension of the enclosure. For the version with compartments, the useful height is 200mm less.
[**] Implies mounting the intermediate upright EM1801. The doors have overlapping closure on the intermediate upright (removable) fixed onto the crosspieces mounted in depth.
[1] Also available with double blind doors with closing on intermediate upright (eliminate the suffix B from the code).
[2] Standard plate joining kit: EA1800 (H=1800mm); EA2000 (H=2000mm); EA2200 (H=2200mm). Possibility of lateral insertion with tracks (see pag. 2-66).
[3] EA2113 oversized plate joining kit H=1800/2000/2200mm.
[4] Kit consisting of 2 oversized back plates with relative insertion tracks + plate joining kit.
[5] In case of structures with internal cable container, select the correct rack frame which takes into account the W=200 or W=400mm of the cable container; and leaves W=600mm or W=800mm structure compartment.
[6] W=1600mm enclosures are only available in pre-assembled version with blind door (with overlapping door or intermediate upright).

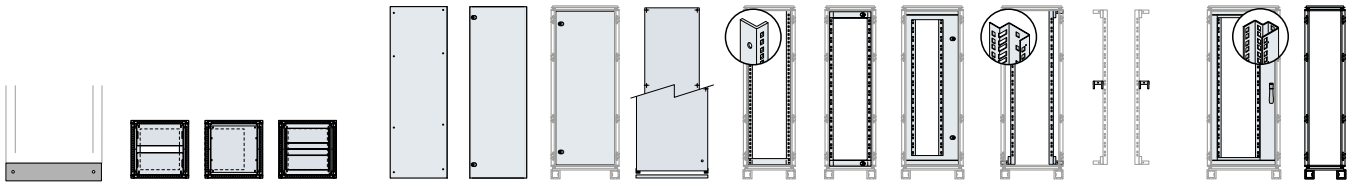

| Flanges for plinth | | Incoming cable flanges | | | Side covers | Inner door | Mounting plates | | Rack frames 19" "L" shaped profile[5] | | | Rack frames 19" | | | |
|---|---|---|---|---|---|---|---|---|---|---|---|---|---|---|---|
| Front / rear | Side | Sliding | Fixed | Built up | No. 2 Blind panel [10] | Side door with closing box | Standard[2] | Oversize + tracks [3] | Fixed Centred | Swing Centred W=600mm | Decentralized W=800mm | Fixed[8] cranked shaped uprights Frame+Fixing kit | Optional central fixing kit | Swing[9] "C" shaped profile Frame+ Fixing kit | External cable container W=300mm |
| ZN4000 | ZN4000 | EF4040 | EF4042 | EF4041 | EL1840K | EC1841K | - | EA1841 | EA1940 | - | - | - | - | - | ER3040K |
| ZN6000 | | EF6040 | EF6043 | EF6041 | | | EE1860K | EA1860 | EA1960 | EG1800 | EG1801K | - | EG1805+ EB6000 | EB0400 | - |
| ZN8000 | | EF8040 | EF8042 | EF8041 | | | EE1880K | EA1880 | EA1981 | EG1880 | - | EG1803K | EG1805+ EB8000 | EB8001+ EB0400 | EG1804K+ EV0007 |
| ZN1000 | | EF1040 | EF1042 | EF1041 | | | EE1810K | EA1810 | EA1910 | - | - | - | - | | - |
| 2xZN6000 | | 2xEF6040 | 2xEF6043 | 2xEF6041 | | | - | EA1812 | EA1912 | - | - | - | - | | - |
| ZN4000 | ZN5000 | EF4050 | EF4052 | EF4051 | EL1850K | EC1851K | - | EA1841 | EA1940 | - | - | - | - | | - |
| ZN6000 | | EF6050 | EF6052 | EF6051 | | | EE1860K | EA1860 | EA1960 | EG1800 | EG1801K | - | EG1805+ EB8000 | EB0500 | - |
| ZN8000 | | EF8050 | EF8052 | EF8051 | | | EE1880K | EA1880 | EA1981 | EG1880 | - | EG1803K | EG1805+ EB8000 | EB8001+ EB0500 | EG1804K+ EV0007 |
| ZN1000 | | EF1053 | EF1052 | EF1051 | | | EE1810K | EA1810 | EA1910 | - | - | - | - | - | - |
| 2xZN6000 | | 2xEF6050 | 2xEF6052 | 2xEF6051 | | | - | EA1812 | EA1912 | - | - | - | - | - | - |
| 2xZN8000 | | 2xEF8050 | 2xEF8052 | 2xEF8051 | | | - | 2x1STQ006248B0000 | EA1916[4] | - | - | - | - | - | - |
| ZN4000 | ZN6000 | EF4060 | EF4063 | EF4061 | EL1860K | EC1861K | - | EA1841 | EA1940 | - | - | - | - | - | ER3060K |
| ZN6000 | | EF6060 | EF6062 | EF6061 | | | EE1860K | EA1860 | EA1960 | EG1800 | EG1801K | - | EG1805+ EB8000 | EB0600 | - |
| ZN8000 | | EF8060 | EF8062 | EF8061 | | | EE1880K | EA1880 | EA1981 | EG1880 | - | EG1803K | EG1805+ EB8000 | EB8001+ EB0600 | EG1804K+ EV0007 |
| ZN1000 | | EF1060 | EF1062 | EF1061 | | | EE1810K | EA1810 | EA1910 | - | - | - | - | - | - |
| 2xZN6000 | | 2xEF6060 | 2xEF6062 | 2xEF6061 | | | - | EA1812 | EA1912 | - | - | - | - | - | - |
| 2xZN8000 | | 2xEF8060 | 2xEF8062 | 2xEF8061 | | | - | 2x1STQ006248B0000 | EA1916[4] | - | - | - | - | - | - |
| ZN4000 | ZN8000 | EF4080 | EF4082 | EF4081 | EL1880K | EC1881K | - | EA1841 | EA1940 | - | - | - | - | - | ER3080K |
| ZN6000 | | EF6080 | EF6082 | EF6081 | | | EE1860K | EA1860 | EA1960 | EG1800 | EG1801K | - | EG1805+ EB8000 | EB0800 | - |
| ZN8000 | | EF8080 | EF8082 | EF8081 | | | EE1880K | EA1880 | EA1981 | EG1880 | - | EG1803K | EG1805+ EB8000 | EB8001+ EB0800 | EG1804K+ EV0007 |
| ZN1000 | | EF1080 | EF1082 | EF1081 | | | EE1810K | EA1810 | EA1910 | - | - | - | - | | - |
| 2xZN6000 | | 2xEF6080 | 2xEF6082 | 2xEF6081 | | | - | EA1812 | EA1912 | - | - | - | - | | - |
| 2xZN8000 | | 2xEF8080 | 2xEF8082 | 2xEF8081 | | | - | 2x1STQ006248B0000 | EA1916[4] | - | - | - | - | | - |
| ZN4000 | ZN1000 | EF4010 | EF4012 | EF4011 | EL1810K | EC1811K | - | EA1841 | EA1940 | - | - | - | - | | - |
| ZN6000 | | EF6010 | EF6012 | EF6011 | | | EE1860K | EA1860 | EA1960 | EG1800 | EG1801K | - | EG1805+ EB8000 | EB1000 | - |
| ZN8000 | | EF8010 | EF8012 | EF8011 | | | - | EA1880 | EA1981 | EG1880 | - | EG1803K | EG1805+ EB8000 | EB8001+ EB1000 | EG1804K+ EV0007 |
| ZN1000 | | EF1010 | EF1012 | EF1011 | | | EE1810K | EA1810 | EA1910 | - | - | - | - | - | - |

[7] Examples of configuration and technical characteristics at page 2-116.
[8] Rack frame W=600mm needs fixing brackets EB6000 and for an optional central fixing order a couple of crosspieces EB... see page 2-70 according to switchboard depth. Accessories from page 2-88.
Rack frame W=800mm needs fixing brackets EB8000 and for an optional central fixing order a couple of crosspieces EB... see page 2-70 according to switchboard depth. Moreover, fixing kits replacing brackets and crosspieces according to switchboard depth are available, codes on page 2-88. Accessories from page 2-89.
[9] Only available for W=800mm (even in structures with cable container and W=800mm structure compartment). Order specific fixing kit EV0007.
[10] Single side panel available on page 2-54.
[11] Not compatible with structures W800 with internal cable container for the presence of intermediate upright (600+200mm).
Kit for placing structures side by side EV0002/EV0003/EV0006 see page 2-76.

# Pre-assembled IS2 Cabinets

## Selection of the structure - H=2000

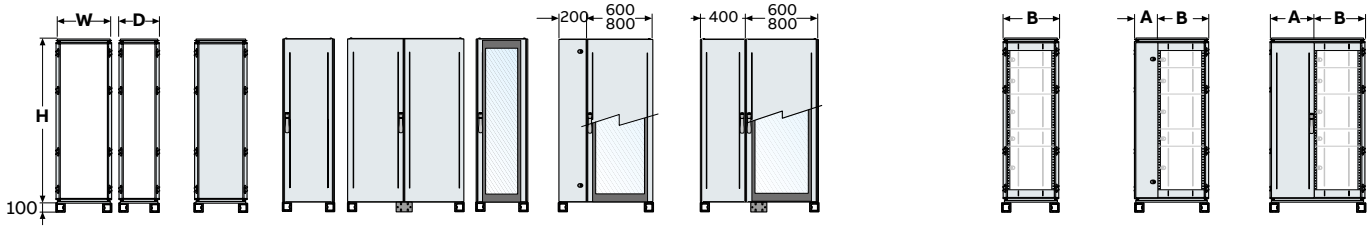


| External dimensions | | | Cabinet with door | | | | Cabinet with cable container | | | | Cabinet with compartments [7] | | | | | | |
|---|---|---|---|---|---|---|---|---|---|---|---|---|---|---|---|---|---|
| (H)[*] mm | (W) mm | (D) mm | Cabinet without door | Blind door | Double blind with overload closure [1] | Glazed door | Blind door with cable container W=200mm | Blind door with cable container W=400mm | Glazed door with cable container W=200mm | Glazed door with cable container W=400mm | | Width (mm) A | Width (mm) B | | Width (mm) A | Width (mm) B | |
| 2000 | 400 | 400 | - | ES2044K | - | - | - | - | - | - | - | - | - | - | - | - | |
| | 600 | | ES2064SPK | ES2064K | - | ES2064VK | - | - | - | - | ES2064MFK | - | 600 | - | - | - | |
| | 800 | | ES2084SPK | ES2084K | - | ES2084VK | ES2084FV2K | - | ES2084VC2K | - | ES2084MF2K | 200 | 600 | ES2084MFK | - | 800 | |
| | 1000 | | - | ES2004K | ES2014BK | ES2004VK | ES2004FV2K | ES2004FV4K | ES2004VC2K | ES2004VC4K | ES2004MF4K | 400 | 600 | ES2004MF2K | 200 | 800 | |
| | 1200 | | - | - | ES2024BK | ES2024VK[**] | - | ES2024FV4K | - | ES2024VC4K | - | - | - | ES2024MF4K | 400 | 800 | |
| | 400 | 500 | - | ES2045K | - | - | - | - | - | - | - | - | - | - | - | - | |
| | 600 | | ES2065SPK | ES2065K | - | ES2065VK | - | - | - | - | ES2065MFK | - | 600 | - | - | - | |
| | 800 | | - | ES2085K | - | ES2085VK | ES2085FV2K | - | ES2085VC2K | - | ES2085MF2K | 200 | 600 | ES2085MFK | - | 800 | |
| | 1000 | | - | ES2007K | ES2015BK | ES2005VK | ES2005FV2K | ES2005FV4K | ES2005VC2K | ES2005VC4K | ES2005MF4K | 400 | 600 | ES2005MF2K | 200 | 800 | |
| | 1200 | | - | - | ES2025BK | ES2025VK[**] | - | ES2025FV4K | - | ES2025VC4K | - | - | - | ES2025MF4K | 400 | 800 | |
| | 1600[6] | | - | - | ES2075BK | - | - | - | - | - | - | - | - | - | - | - | |
| | 400 | 600 | - | ES2046K | - | - | - | - | - | - | - | - | - | - | - | - | |
| | 600 | | ES2066SPK | ES2066K | - | ES2066VK | - | - | - | - | ES2066MFK | - | 600 | - | - | - | |
| | 800 | | ES2086SPK | ES2086K | - | ES2086VK | ES2086FV2K | - | ES2086VC2K | - | ES2086MF2K | 200 | 600 | ES2086MFK | - | 800 | |
| | 1000 | | - | ES2006K | ES2016BK | ES2006VK | ES2006FV2K | ES2006FV4K | ES2006VC2K | ES2006VC4K | ES2006MF4K | 400 | 600 | ES2006MF2K | 200 | 800 | |
| | 1200 | | - | - | ES2026BK | ES2026VK[**] | - | ES2026FV4K | - | ES2026VC4K | - | - | - | ES2026MF4K | 400 | 800 | |
| | 1600[6] | | - | - | ES2076BK | - | - | - | - | - | - | - | - | - | - | - | |
| | 400 | 800 | - | ES2048K | - | - | - | - | - | - | - | - | - | - | - | - | |
| | 600 | | - | ES2068K | - | ES2068VK | - | - | - | - | ES2068MFK | - | 600 | - | - | - | |
| | 800 | | - | ES2089K | - | ES2088VK | ES2088FV2K | - | ES2088VC2K | - | ES2088MF2K | 200 | 600 | ES2088MFK | - | 800 | |
| | 1000 | | - | ES2008K | ES2018BK | ES2008VK | ES2008FV2K | ES2008FV4K | ES2008VC2K | ES2008VC4K | ES2008MF4K | 400 | 600 | ES2008MF2K | 200 | 800 | |
| | 1200 | | - | - | ES2028BK | ES2028VK[**] | - | ES2028FV4K | - | ES2028VC4K | - | - | - | ES2028MF4K | 400 | 800 | |
| | 1600[6] | | - | - | ES2078BK | - | - | - | - | - | - | - | - | - | - | - | |
| | 400 | 1000 | - | ES2040K | - | - | - | - | - | - | - | - | - | - | - | - | |
| | 600 | | - | ES2060K | - | ES2060VK | - | - | - | - | ES2060MFK | - | 600 | - | - | - | |
| | 800 | | - | ES2080K | - | ES2080VK | - | - | - | - | ES2080MF2K | 200 | 600 | ES2080MFK | - | 800 | |
| | 1000 | | - | ES2000K | ES2010BK | ES2000VK | - | - | - | - | ES2000MF4K | 400 | 600 | ES2000MF2K | 200 | 800 | |

[*] The useful height is always 100mm less than the external dimension of the enclosure. For the version with compartments, the useful height is 200mm less.
[**] Implies mounting the intermediate upright EM1801. The doors have overlapping closure on the intermediate upright (removable) fixed onto the crosspieces mounted in depth.
[1] Also available with double blind doors with closing on intermediate upright (eliminate the suffix B from the code).
[2] Standard plate joining kit: EA1800 (H=1800mm); EA2000 (H=2000mm); EA2200 (H=2200mm). Possibility of lateral insertion with tracks (see pag. 2-66).
[3] EA2113 oversized plate joining kit H=1800/2000/2200mm.
[4] Kit consisting of 2 oversized back plates with relative insertion tracks + plate joining kit.
[5] In case of structures with internal cable container, select the correct rack frame which takes into account the W=200 or W=400mm of the cable container; and leaves W=600mm or W=800mm structure compartment.
[6] W=1600mm enclosures are only available in pre-assembled version with blind door (with overlapping door or intermediate upright).

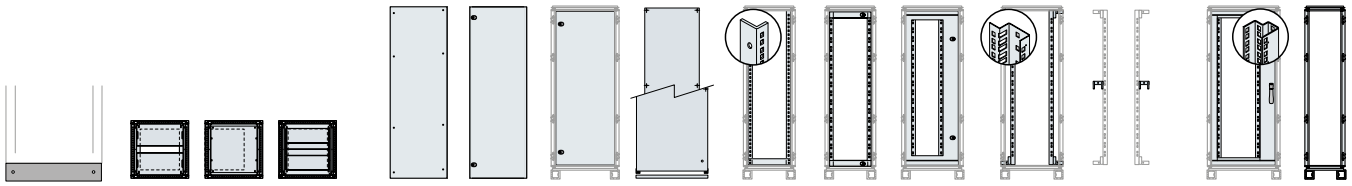

| Flanges for plinth | | Incoming cable flanges | | | Side covers | | Inner door | Mounting plates | | Rack frames 19" "L" shaped profile[5] | | | Rack frames 19" | | | |
|---|---|---|---|---|---|---|---|---|---|---|---|---|---|---|---|---|
| Front/ rear | Side | Sliding | Fixed | Built up | No. 2 Blind panel [10] | Side door with closing box | Standard[2] | Oversize + tracks [3] | Fixed Centred | Swing Centred W=600mm | Decentralized W=800mm | Fixed[8] cranked shaped uprights Frame+Fixing kit | Optional central fixing kit | Swing[9] "C" shaped profile Frame+ Fixing kit | External cable container W=300mm |
| ZN4000 | ZN4000 | EF4040 | EF4042 | EF4041 | EL2040K | EC2041K | - | EA2040 | EA2140 | - | - | - | | | ER3041K |
| ZN6000 | | EF6040 | EF6043 | EF6041 | | | EE2060K | EA2060 | EA2161 | EG2000 | EG2001K | - | EG2005+ EB6000 | EB0400 | - | |
| ZN8000 | | EF8040 | EF8042 | EF8041 | | | EE2080K | EA2080 | EA2180 | EG2080 | - | EG2003K | EG2005+ EB6000 | EB8001+ EB0400 | EG2004K+ EV0007 | |
| ZN1000 | | EF1040 | EF1042 | EF1041 | | | EE2010K | EA2010 | EA2110 | - | - | - | - | - | - | |
| 2xZN6000 | | 2xEF6040 | 2xEF6043 | 2xEF6041 | | | - | EA2013 | EA2112 | - | - | - | - | - | - | |
| ZN4000 | ZN5000 | EF4050 | EF4052 | EF4051 | EL2050K | EC2051K | - | EA2040 | EA2140 | - | - | - | - | - | - | ER3051K |
| ZN6000 | | EF6050 | EF6052 | EF6051 | | | EE2060K | EA2060 | EA2161 | EG2000 | EG2001K | - | EG2005+ EB6000 | EB0500 | - | |
| ZN8000 | | EF8050 | EF8052 | EF8051 | | | EE2080K | EA2080 | EA2180 | EG2080 | - | EG2003K | EG2005+ EB6000 | EB8001+ EB0500 | EG2004K+ EV0007 | |
| ZN1000 | | EF1053 | EF1052 | EF1051 | | | EE2010K | EA2010 | EA2110 | - | - | - | - | - | - | |
| 2xZN6000 | | 2xEF6050 | 2xEF6052 | 2xEF6051 | | | - | EA2013 | EA2112 | - | - | - | - | - | - | |
| 2xZN8000 | | 2xEF8050 | 2xEF8052 | 2xEF8051 | | | - | 2x1STQ006249B0000 | EA2116[4] | - | - | - | - | - | - | |
| ZN4000 | ZN6000 | EF4060 | EF4063 | EF4061 | EL2060K | EC2061K | - | EA2040 | EA2140 | - | - | - | - | - | - | ER3061K |
| ZN6000 | | EF6060 | EF6062 | EF6061 | | | EE2060K | EA2060 | EA2161 | EG2000 | EG2001K | - | EG2005+ EB6000 | EB0600 | - | |
| ZN8000 | | EF8060 | EF8062 | EF8061 | | | EE2080K | EA2080 | EA2180 | EG2080 | - | EG2003K | EG2005+ EB6000 | EB8001+ EB0600 | EG2004K+ EV0007 | |
| ZN1000 | | EF1060 | EF1062 | EF1061 | | | EE2010K | EA2010 | EA2110 | - | - | - | - | - | - | |
| 2xZN6000 | | 2xEF6060 | 2xEF6062 | 2xEF6061 | | | - | EA2013 | EA2112 | - | - | - | - | - | - | |
| 2xZN8000 | | 2xEF8060 | 2xEF8062 | 2xEF8061 | | | - | 2x1STQ006249B0000 | EA2116[4] | - | - | - | - | - | - | |
| ZN4000 | ZN8000 | EF4080 | EF4082 | EF4081 | EL2080K | EC2081K | - | EA2040 | EA2140 | - | - | - | - | - | - | ER3081K |
| ZN6000 | | EF6080 | EF6082 | EF6081 | | | EE2060K | EA2060 | EA2161 | EG2000 | EG2001K | - | EG2005+ EB6000 | EB0800 | - | |
| ZN8000 | | EF8080 | EF8082 | EF8081 | | | EE2080K | EA2080 | EA2180 | EG2080 | - | EG2003K | EG2005+ EB6000 | EB8001+ EB0800 | EG2004K+ EV0007 | |
| ZN1000 | | EF1080 | EF1082 | EF1081 | | | EE2010K | EA2010 | EA2110 | - | - | - | - | - | - | |
| 2xZN6000 | | 2xEF6080 | 2xEF6082 | 2xEF6081 | | | - | EA2013 | EA2112 | - | - | - | - | - | - | |
| 2xZN8000 | | 2xEF8080 | 2xEF8082 | 2xEF8081 | | | - | 2x1STQ006249B0000 | EA2116[4] | - | - | - | - | - | - | |
| ZN4000 | ZN1000 | EF4010 | EF4012 | EF4011 | EL2012K | EC2011K | - | EA2040 | EA2140 | - | - | - | - | - | - | ER3011K |
| ZN6000 | | EF6010 | EF6012 | EF6011 | | | EE2060K | EA2060 | EA2161 | EG2000 | EG2001K | - | EG2005+ EB6000 | EB1000 | - | |
| ZN8000 | | EF8010 | EF8012 | EF8011 | | | - | EA2080 | EA2180 | EG2080 | - | EG2003K | EG2005+ EB6000 | EB8001+ EB1000 | EG2004K+ EV0007 | |
| ZN1000 | | EF1010 | EF1012 | EF1011 | | | EE2010K | EA2010 | EA2110 | - | - | - | - | - | | |

[7] Examples of configuration and technical characteristics at page 2-116.
[8] Rack frame W=600mm needs fixing brackets EB6000 and for an optional central fixing order a couple of crosspieces EB... see page 2-70 according to switchboard depth. Accessories from page 2-88.
Rack frame W=800mm needs fixing brackets EB8000 and for an optional central fixing order a couple of crosspieces EB... see page 2-70 according to switchboard depth. Moreover, fixing kits replacing brackets and crosspieces according to switchboard depth are available, codes on page 2-88. Accessories from page 2-89.
[9] Only available for W=800mm (even in structures with cable container and W=800mm structure compartment). Order specific fixing kit EV0007.
[10] Single side panel available on page 2-54.
[11] Not compatible with structures W800 with internal cable container for the presence of intermediate upright (600+200mm).
Kit for placing structures side by side EV0002/EV0003/EV0006 see page 2-76.

# Pre-assembled IS2 Cabinets

## Selection of the structure - H=2200

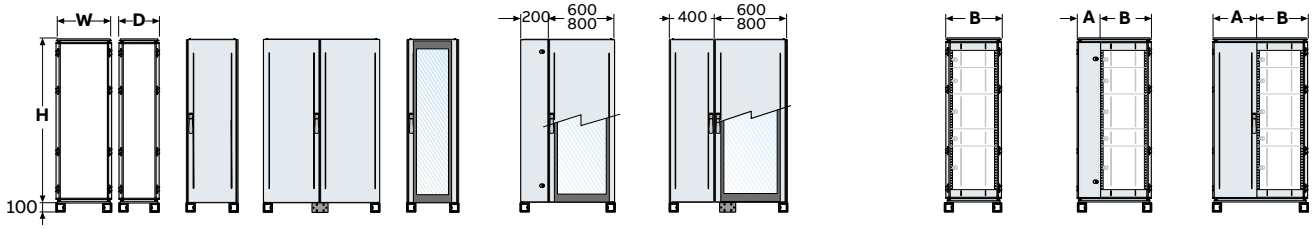


| External dimensions | | | Cabinet with door | | | Cabinet with cable container | | | | Cabinet with compartments [7] | | | | | |
|---|---|---|---|---|---|---|---|---|---|---|---|---|---|---|---|
| (H)[*] mm | (W) mm | (D) mm | Blind door | Double blind with overload closure [1] | Glazed door | Blind door with cable container W=200mm | Blind door with cable container W=400mm | Glazed door with cable container W=200mm | Glazed door with cable container W=400mm | | Width (mm) A | B | | Width (mm) A | B |
| 2200 | 400 | 400 | ES2244K | - | - | - | - | - | - | - | - | - | - | - | - |
| | 600 | | ES2264K | - | ES2264VK | - | - | - | - | ES2264MFK | - | - | - | - | - |
| | 800 | | ES2284K | - | ES2284VK | ES2284FV2K | - | ES2284VC2K | - | ES2284MF2K | - | 800 | ES2284MFK | - | 800 |
| | 1000 | | ES2204K | ES2214BK | ES2204VK | ES2204FV2K | ES2204FV4K | ES2204VC2K | ES2204VC4K | ES2204MF4K | 200 | 800 | ES2204MF2K | 200 | 800 |
| | 1200 | | - | ES2224BK | ES2224VK[**] | - | ES2224FV4K | - | ES2224VC4K | - | 400 | 800 | ES2224MF4K | 400 | 800 |
| | 400 | 500 | ES2245K | - | - | - | - | - | - | - | - | - | - | - | - |
| | 600 | | ES2265K | - | ES2265VK | - | - | - | - | ES2265MFK | - | - | - | - | - |
| | 800 | | ES2285K | - | ES2285VK | ES2285FV2K | - | ES2285VC2K | - | ES2285MF2K | - | 800 | ES2285MFK | - | 800 |
| | 1000 | | ES2205K | ES2215BK | ES2205VK | ES2205FV2K | ES2205FV4K | ES2205VC2K | ES2205VC4K | ES2205MF4K | 200 | 800 | ES2205MF2K | 200 | 800 |
| | 1200 | | - | ES2225BK | ES2225VK[**] | - | ES2225FV4K | - | ES2225VC4K | - | 400 | 800 | ES2225MF4K | 400 | 800 |
| | 1600[6] | | - | ES2275BK | - | - | - | - | - | - | - | - | - | - | - |
| | 400 | 600 | ES2246K | - | - | - | - | - | - | - | - | - | - | - | - |
| | 600 | | ES2266K | - | ES2266VK | - | - | - | - | ES2266MFK | - | - | - | - | - |
| | 800 | | ES2287K | - | ES2286VK | ES2286FV2K | - | ES2286VC2K | - | ES2286MF2K | - | 800 | ES2286MFK | - | 800 |
| | 1000 | | ES2206K | ES2216BK | ES2206VK | ES2206FV2K | ES2206FV4K | ES2206VC2K | ES2206VC4K | ES2206MF4K | 200 | 800 | ES2206MF2K | 200 | 800 |
| | 1200 | | - | ES2226BK | ES2226VK[**] | - | ES2226FV4K | - | ES2226VC4K | - | 400 | 800 | ES2226MF4K | 400 | 800 |
| | 1600[6] | | - | ES2276BK | - | - | - | - | - | - | - | - | - | - | - |
| | 400 | 800 | ES2248K | - | - | - | - | - | - | - | - | - | - | - | - |
| | 600 | | ES2268K | - | ES2268VK | - | - | - | - | ES2268MFK | - | - | - | - | - |
| | 800 | | ES2288K | - | ES2288VK | ES2288FV2K | - | ES2288VC2K | - | ES2288MF2K | - | 800 | ES2288MFK | - | 800 |
| | 1000 | | ES2208K | ES2218BK | ES2208VK | ES2208FV2K | ES2208FV4K | ES2208VC2K | ES2208VC4K | ES2208MF4K | 200 | 800 | ES2208MF2K | 200 | 800 |
| | 1200 | | - | ES2228BK | ES2228VK[**] | - | ES2228FV4K | - | ES2228VC4K | - | 400 | 800 | ES2228MF4K | 400 | 800 |
| | 1600[6] | | - | ES2279BK | - | - | - | - | - | - | - | - | - | - | - |
| | 400 | 1000 | ES2240K | - | - | - | - | - | - | - | - | - | - | - | - |
| | 600 | | ES2260K | - | ES2260VK | - | - | - | - | ES2260MFK | - | - | - | - | - |
| | 800 | | ES2280K | - | ES2280VK | - | - | - | - | ES2281MF2K | - | 800 | ES2280MFK | - | 800 |
| | 1000 | | ES2200K | ES2210BK | ES2200VK | - | - | - | - | ES2200MF4K | 200 | 800 | ES2200MF2K | 200 | 800 |

[*] The useful height is always 100mm less than the external dimension of the enclosure. For the version with compartments, the useful height is 200mm less.
[**] Implies mounting the intermediate upright EM1801. The doors have overlapping closure on the intermediate upright (removable) fixed onto the crosspieces mounted in depth.
[1] Also available with double blind doors with closing on intermediate upright (eliminate the suffix B from the code).
[2] Standard plate joining kit: EA1800 (H=1800mm); EA2000 (H=2000mm); EA2200 (H=2200mm). Possibility of lateral insertion with tracks (see pag. 2-66).
[3] EA2113 oversized plate joining kit H=1800/2000/2200mm.
[4] Kit consisting of 2 oversized back plates with relative insertion tracks + plate joining kit.
[5] In case of structures with internal cable container, select the correct rack frame which takes into account the W=200 or W=400mm of the cable container; and leaves W=600mm or W=800mm structure compartment.
[6] W=1600mm enclosures are only available in pre-assembled version with blind door (with overlapping door or intermediate upright).

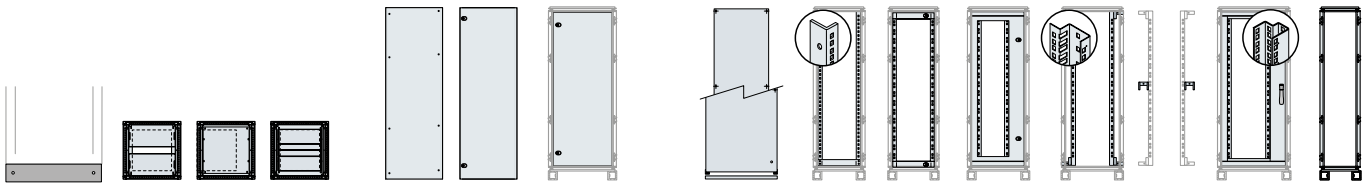

| Flanges for plinth | | Incoming cable flanges | | | Side covers | | Inner door | Mounting plates | | Rack frames 19" "L" shaped profile[5] | | | Rack frames 19" | | | |
|---|---|---|---|---|---|---|---|---|---|---|---|---|---|---|---|---|
| Front/ rear | Side | Sliding | Fixed | Built up | No. 2 Blind panel [10] | Side door with closing box | Standard[2] | Oversize + tracks [3] | | Fixed Centred | Swing Centred W=600mm | Decentralized W=800mm | Fixed[8] cranked shaped uprights Frame+Fixing kit | Optional central fixing kit | Swing[9] "C" shaped profile Frame+ Fixing kit | External cable container W=300mm |
| ZN4000 | ZN4000 | EF4040 | EF4042 | EF4041 | EL2240K | EC2241K | - | EA2240 | EA2340 | - | - | - | - | - | - | ER3042K |
| ZN6000 | | EF6040 | EF6043 | EF6041 | | | EE2260K | EA2260 | EA2360 | EG2200 | EG2201K | - | EG2205+ EB6000 | EB0400 | - | |
| ZN8000 | | EF8040 | EF8042 | EF8041 | | | EE2280K | EA2280 | EA2380 | EG2280 | - | EG2203K | EG2205+ EB6000 | EB8001+ EB0400 | EG2204K+ EV0007 | |
| ZN1000 | | EF1040 | EF1042 | EF1041 | | | EE2210K | EA2210 | EA2310 | - | - | - | - | - | - | |
| 2xZN6000 | | 2xEF6040 | 2xEF6043 | 2xEF6041 | | | - | EA2212 | EA2312 | - | - | - | - | - | - | |
| ZN4000 | ZN5000 | EF4050 | EF4052 | EF4051 | EL2250K | EC2251K | - | EA2240 | EA2340 | - | - | - | - | - | - | ER3052K |
| ZN6000 | | EF6050 | EF6052 | EF6051 | | | EE2260K | EA2260 | EA2360 | EG2200 | EG2201K | - | EG2205+ EB6000 | EB0500 | - | |
| ZN8000 | | EF8050 | EF8052 | EF8051 | | | EE2280K | EA2280 | EA2380 | EG2280 | - | EG2203K | EG2205+ EB6000 | EB8001+ EB0500 | EG2204K+ EV0007 | |
| ZN1000 | | EF1053 | EF1052 | EF1051 | | | EE2210K | EA2210 | EA2310 | - | - | - | - | - | - | |
| 2xZN6000 | | 2xEF6050 | 2xEF6052 | 2xEF6051 | | | - | EA2212 | EA2312 | - | - | - | - | - | - | |
| 2xZN8000 | | 2xEF8050 | 2xEF8052 | 2xEF8051 | | | - | 2x1STQ006250B0000 | EA2316[4] | - | - | - | - | - | - | |
| ZN4000 | ZN6000 | EF4060 | EF4063 | EF4061 | EL2260K | EC2261K | - | EA2240 | EA2340 | - | - | - | - | - | - | ER3062K |
| ZN6000 | | EF6060 | EF6062 | EF6061 | | | EE2260K | EA2260 | EA2360 | EG2200 | EG2201K | - | EG2205+ EB6000 | EB0600 | - | |
| ZN8000 | | EF8060 | EF8062 | EF8061 | | | EE2280K | EA2280 | EA2380 | EG2280 | - | EG2203K | EG2205+ EB6000 | EB8001+ EB0600 | EG2204K+ EV0007 | |
| ZN1000 | | EF1060 | EF1062 | EF1061 | | | EE2210K | EA2210 | EA2310 | - | - | - | - | - | - | |
| 2xZN6000 | | 2xEF6060 | 2xEF6062 | 2xEF6061 | | | - | EA2212 | EA2312 | - | - | - | - | - | - | |
| 2xZN8000 | | 2xEF8060 | 2xEF8062 | 2xEF8061 | | | - | 2x1STQ006250B0000 | EA2316[4] | - | - | - | - | - | - | |
| ZN4000 | ZN8000 | EF4080 | EF4082 | EF4081 | EL2280K | EC2281K | - | EA2240 | EA2340 | - | - | - | - | - | - | ER3082K |
| ZN6000 | | EF6080 | EF6082 | EF6081 | | | EE2260K | EA2260 | EA2360 | EG2200 | EG2201K | - | EG2205+ EB6000 | EB0800 | - | |
| ZN8000 | | EF8080 | EF8082 | EF8081 | | | EE2280K | EA2280 | EA2380 | EG2280 | - | EG2203K | EG2205+ EB6000 | EB8001+ EB0800 | EG2204K+ EV0007 | |
| ZN1000 | | EF1080 | EF1082 | EF1081 | | | EE2210K | EA2210 | EA2310 | - | - | - | - | - | - | |
| 2xZN6000 | | 2xEF6080 | 2xEF6082 | 2xEF6081 | | | - | EA2212 | EA2312 | - | - | - | - | - | - | |
| 2xZN8000 | | 2xEF8080 | 2xEF8082 | 2xEF8081 | | | - | 2x1STQ006250B0000 | EA2316[4] | - | - | - | - | - | - | |
| ZN4000 | ZN1000 | EF4010 | EF4012 | EF4011 | EL2210K | EC2211K | - | EA2240 | EA2340 | - | - | - | - | - | - | ER3012K |
| ZN6000 | | EF6010 | EF6012 | EF6011 | | | EE2260K | EA2260 | EA2360 | EG2200 | EG2201K | - | EG2205+ EB6000 | EB1000 | - | |
| ZN8000 | | EF8010 | EF8012 | EF8011 | | | - | EA2280 | EA2380 | EG2280 | - | EG2203K | EG2205+ EB6000 | EB8001+ EB1000 | EG2204K+ EV0007 | |
| ZN1000 | | EF1010 | EF1012 | EF1011 | | | EE2210K | EA2210 | EA2310 | - | - | - | - | - | | |

[7] Examples of configuration and technical characteristics at page 2-116.
[8] Rack frame W=600mm needs fixing brackets EB6000 and for an optional central fixing order a couple of crosspieces EB... see page 2-70 according to switchboard depth. Accessories from page 2-88.
Rack frame W=800mm needs fixing brackets EB8000 and for an optional central fixing order a couple of crosspieces EB... see page 2-70 according to switchboard depth. Moreover, fixing kits replacing brackets and crosspieces according to switchboard depth are available, codes on page 2-88. Accessories from page 2-89.
[9] Only available for W=800mm (even in structures with cable container and W=800mm structure compartment). Order specific fixing kit EV0007.
[10] Single side panel available on page 2-54.
[11] Not compatible with structures W800 with internal cable container for the presence of intermediate upright (600+200mm).
Kit for placing structures side by side EV0002/EV0003/EV0006 see page 2-76.

# IS2 kit version cabinets

## Selection of the structure - H=1400mm

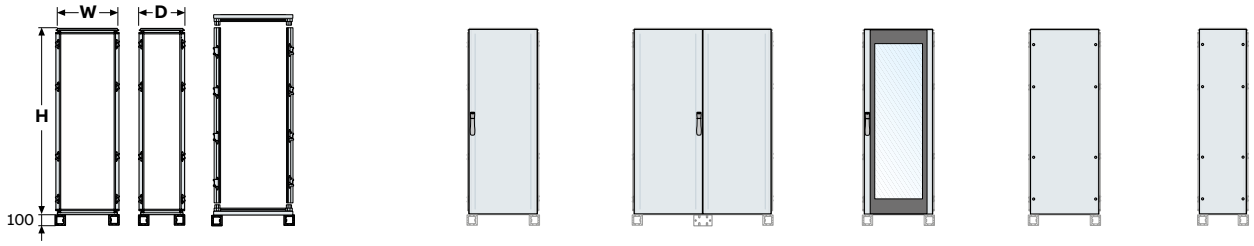


| External dimensions (H) [1] mm | (W) mm | (D) mm | Base/ Top/ Plinth | Uprights For structure | IP65 blind door | Blind doors for version with double door with overlapping closing | IP65 glass door | Rear panel | Side panel |
|---|---|---|---|---|---|---|---|---|---|
| 1400 | 400 | 400 | EK4040KN | EM1400 | EC1440K | - | - | EP1440K | EL1440K |
| | | 600 | EK4060KN | | EC1440K | - | - | EP1440K | EL1460K |
| | | 800 | EK4080KN | | EC1440K | - | - | EP1440K | EL1480K |
| | 600 | 300 | 1STQ005317B0000 | EM1400 | EC1460K | - | 1STQ005328B0000 | EP1460K | 1STQ005322B0000 |
| | | 400 | EK6040KN | | EC1460K | - | 1STQ005328B0000 | EP1460K | EL1440K |
| | | 500 | EK6050KN | | EC1460K | - | 1STQ005328B0000 | EP1460K | 1STQ005323B0000 |
| | | 600 | EK6060KN | | EC1460K | - | 1STQ005328B0000 | EP1460K | EL1460K |
| | | 800 | EK6080KN | | EC1460K | - | 1STQ005328B0000 | EP1460K | EL1480K |
| | 800 | 300 | 1STQ005318B0000 | EM1400 | EC1480K | - | 1STQ005329B0000 | EP1480K | 1STQ005322B0000 |
| | | 400 | EK8040KN | | EC1480K | - | 1STQ005329B0000 | EP1480K | EL1440K |
| | | 500 | EK8050KN | | EC1480K | - | 1STQ005329B0000 | EP1480K | 1STQ005323B0000 |
| | | 600 | EK8060KN | | EC1480K | - | 1STQ005329B0000 | EP1480K | EL1460K |
| | | 800 | EK8080KN | | EC1480K | - | 1STQ005329B0000 | EP1480K | EL1480K |
| | 1000 | 300 | 1STQ005319B0000 | EM1400 | 1STQ005321B0000 | - | - | 1STQ005320B0000 | 1STQ005322B0000 |
| | | 400 | EK1040KN | | 1STQ005321B0000 | - | - | 1STQ005320B0000 | EL1440K |
| | | 500 | EK1050KN | | 1STQ005321B0000 | - | - | 1STQ005320B0000 | 1STQ005323B0000 |
| | 1200 | 400 | EK1240KN | | - | ED1412SK+ EC1480FC6K | - | EP1412K | EL1440K |
| | | 500 | EK1250KN | EM1400 | - | ED1412SK+ EC1480FC6K | - | EP1412K | 1STQ005323B0000 |
| | | 600 | EK1260KN | | - | ED1412SK+ EC1480FC6K | - | EP1412K | EL1460K |
| | | 800 | EK1280KN | | - | ED1412SK+ EC1480FC6K | - | EP1412K | EL1480K |

[1] The useful height is always 100mm less than the external dimension of the enclosure. For the version with compartments, the useful height is 200mm less.

**Example of double door enclosure**

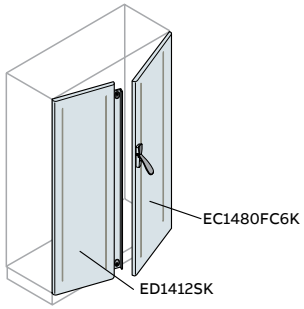

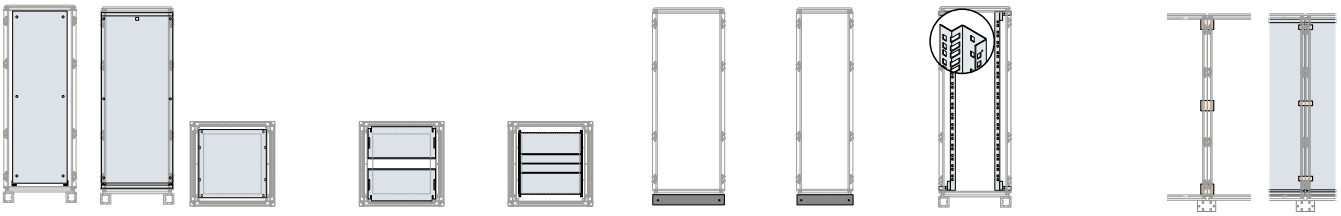

| Standard mounting plate | Oversized mounting plate + rails | Fixed cable entry flanges | Sliding cable entry flanges | Build-up cable entry flanges | Plinth flanges front/ rear | Plinth flanges side | 19" Fixed cranked shaped upright | Side-by-side structure Kit | Oversized platejoining Kit |
|---|---|---|---|---|---|---|---|---|---|
| EA1440 | EA1540 | EF4042 | EF4040 | EF4041 | ZN4000 | ZN4000 | - | EV0002 EV0003 EV0006 | EA2113 |
| EA1440 | EA1540 | EF4063 | EF4060 | EF4061 | ZN4000 | ZN6000 | - | | |
| EA1440 | EA1540 | EF4082 | EF4080 | EF4081 | ZN4000 | ZN8000 | - | | |
| EA1460 | EA1560 | 1STQ005426B0000 | - | - | ZN6000 | ZN3000 | 1STQ005332B0000+EB6000 | EV0002 EV0003 EV0006 | EA2113 |
| EA1460 | EA1560 | EF6043 | EF6040 | EF6041 | ZN6000 | ZN4000 | 1STQ005332B0000+EB6000 | | |
| EA1460 | EA1560 | EF6052 | EF6050 | EF6051 | ZN6000 | ZN5000 | 1STQ005332B0000+EB6000 | | |
| EA1460 | EA1560 | EF6062 | EF6060 | EF6061 | ZN6000 | ZN6000 | 1STQ005332B0000+EB6000 | | |
| EA1460 | EA1560 | EF6082 | EF6080 | EF6081 | ZN6000 | ZN8000 | 1STQ005332B0000+EB6000 | | |
| EA1480 | EA1580 | 1STQ005427B0000 | - | - | ZN8000 | ZN3000 | 1STQ005332B0000+EB8000 | EV0002 EV0003 EV0006 | EA2113 |
| EA1480 | EA1580 | EF8042 | EF8040 | EF8041 | ZN8000 | ZN4000 | 1STQ005332B0000+EB8000 | | |
| EA1480 | EA1580 | EF8052 | EF8050 | EF8051 | ZN8000 | ZN5000 | 1STQ005332B0000+EB8000 | | |
| EA1480 | EA1580 | EF8062 | EF8060 | EF8061 | ZN8000 | ZN6000 | 1STQ005332B0000+EB8000 | | |
| EA1480 | EA1580 | EF8082 | EF8080 | EF8081 | ZN8000 | ZN8000 | 1STQ005332B0000+EB8000 | | |
| EA1411 | - | 1STQ005428B0000 | - | - | ZN1000 | ZN3000 | - | EV0002 EV0003 EV0006 | EA2113 |
| EA1411 | - | EF1042 | EF1040 | EF1041 | ZN1000 | ZN4000 | - | | |
| EA1411 | - | EF1052 | EF1053 | EF1051 | ZN1000 | ZN5000 | - | | |
| EA1412 | EA1512 | 2xEF6043 | 2xEF6040 | 2xEF6041 | 2xZN6000 | ZN4000 | - | | |
| EA1412 | EA1512 | 2xEF6052 | 2xEF6051 | 2xEF6051 | 2xZN6000 | ZN5000 | - | EV0002 EV0003 EV0006 | EA2113 |
| EA1412 | EA1512 | 2xEF6062 | 2xEF6060 | 2xEF6061 | 2xZN6000 | ZN6000 | - | | |
| EA1412 | EA1512 | 2xEF6082 | 2xEF6080 | 2xEF6081 | 2xZN6000 | ZN8000 | - | | |

• Ordering codes 2–34 • In-depth technical information page 4–1 • Overall dimensions page 5–1

# IS2 kit version cabinets

## Selection of the structure - H=1600mm

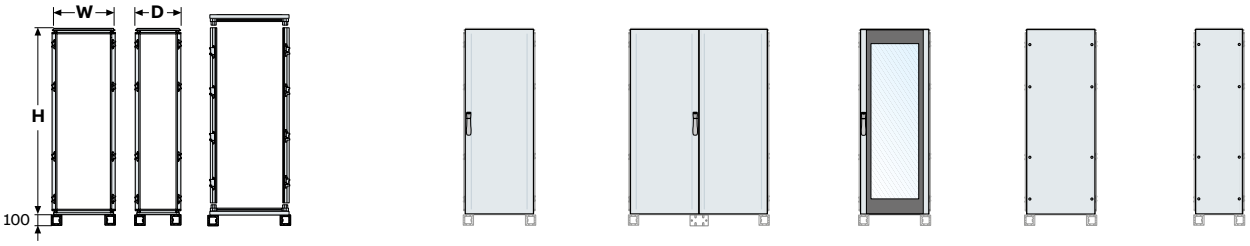


| External dimensions (H) [1] mm | (W) mm | (D) mm | Base/ Top/ Plinth | Uprights For structure | IP65 blind door | Blind doors for version with double door with overlapping closing | IP65 glass door | Rear panel | Side panel |
|---|---|---|---|---|---|---|---|---|---|
| 1600 | 400 | 500 | EK4050KN | EM1600 | EC1640K | - | - | EP1640K | EL1650K |
| | | 600 | EK4060KN | EM1600 | EC1640K | - | - | EP1640K | EL1660K |
| | | 800 | EK4080KN | EM1600 | EC1640K | - | - | EP1640K | EL1680K |
| | | 1000 | EK4010KN | EM1600 | EC1640K | - | - | EP1640K | EL1610K |
| | 600 | 300 | 1STQ005317B0000 | EM1600 | EC1660K | - | 1STQ005330B0000 | EP1660K | 1STQ005324B0000 |
| | | 400 | EK6040KN | EM1600 | EC1660K | - | 1STQ005330B0000 | EP1660K | 1STQ005325B0000 |
| | | 500 | EK6050KN | EM1600 | EC1660K | - | 1STQ005330B0000 | EP1660K | EL1650K |
| | | 600 | EK6060KN | EM1600 | EC1660K | - | 1STQ005330B0000 | EP1660K | EL1660K |
| | | 800 | EK6080KN | EM1600 | EC1660K | - | 1STQ005330B0000 | EP1660K | EL1680K |
| | | 1000 | EK6010KN | EM1600 | EC1660K | - | 1STQ005330B0000 | EP1660K | EL1610K |
| | 800 | 300 | 1STQ005318B0000 | EM1600 | EC1680K | - | 1STQ005331B0000 | EP1680K | 1STQ005324B0000 |
| | | 400 | EK8040KN | EM1600 | EC1680K | - | 1STQ005331B0000 | EP1680K | 1STQ005325B0000 |
| | | 500 | EK8050KN | EM1600 | EC1680K | - | 1STQ005331B0000 | EP1680K | EL1650K |
| | | 600 | EK8060KN | EM1600 | EC1680K | - | 1STQ005331B0000 | EP1680K | EL1660K |
| | | 800 | EK8080KN | EM1600 | EC1680K | - | 1STQ005331B0000 | EP1680K | EL1680K |
| | | 1000 | EK8010KN | EM1600 | EC1680K | - | 1STQ005331B0000 | EP1680K | EL1610K |
| | 1000 | 400 | EK1040KN | EM1600 | EC1610K | - | - | EP1610K | 1STQ005325B0000 |
| | | 500 | EK1050KN | EM1600 | EC1610K | - | - | EP1610K | EL1650K |
| | | 600 | EK1060KN | EM1600 | EC1610K | - | - | EP1610K | EL1660K |
| | | 800 | EK1080KN | EM1600 | EC1610K | - | - | EP1610K | EL1680K |
| | | 1000 | EK1010KN | EM1600 | EC1610K | - | - | EP1610K | EL1610K |
| | 1200 | 400 | EK1240KN | EM1600 | - | ED1612SK+ EC1680FC6K | - | EP1612K | 1STQ005325B0000 |
| | | 500 | EK1250KN | EM1600 | - | ED1612SK+ EC1680FC6K | - | EP1612K | EL1650K |
| | | 600 | EK1260KN | EM1600 | - | ED1612SK+ EC1680FC6K | - | EP1612K | EL1660K |
| | | 800 | EK1280KN | EM1600 | - | ED1612SK+ EC1680FC6K | - | EP1612K | EL1680K |

[1] The useful height is always 100mm less than the external dimension of the enclosure. For the version with compartments, the useful height is 200mm less.

**Example of double door enclosure**

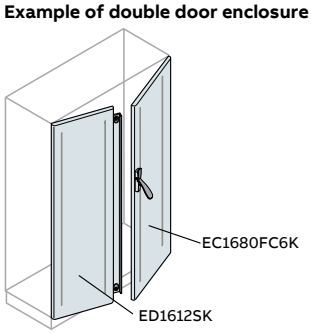

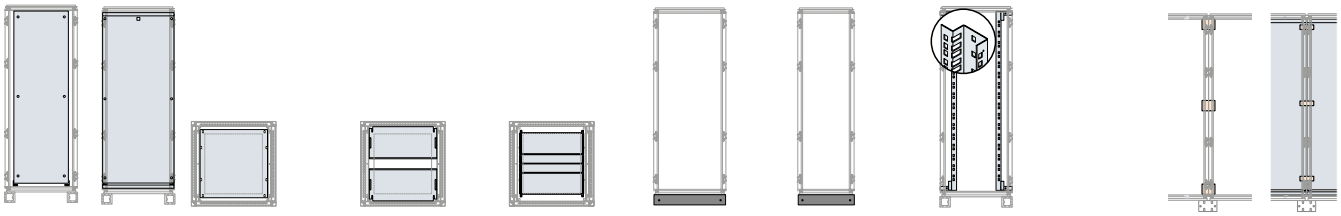

| Standard mounting plate | Oversized mounting plate + rails | Fixed cable entry flanges | Sliding cable entry flanges | Build-up cable entry flanges | Plinth flanges front/ rear | Plinth flanges side | 19" Fixed cranked shaped upright | Side-by-side structure Kit | Oversized platejoining Kit |
|---|---|---|---|---|---|---|---|---|---|
| EA1640 | EA1740 | EF4052 | EF4050 | EF4051 | ZN4000 | ZN5000 | - | EV0002 EV0003 EV0006 | EA2113 |
| EA1640 | EA1740 | EF4063 | EF4060 | EF4061 | ZN4000 | ZN6000 | - | | |
| EA1640 | EA1740 | EF4082 | EF4080 | EF4081 | ZN4000 | ZN8000 | - | | |
| EA1640 | EA1740 | EF4012 | EF4010 | EF4011 | ZN4000 | ZN1000 | - | | |
| EA1616 | EA1760 | 1STQ005426B0000 | - | - | ZN6000 | ZN3000 | 1STQ005333B0000+EB6000 | EV0002 EV0003 EV0006 | EA2113 |
| EA1616 | EA1760 | EF6043 | EF6040 | EF6041 | ZN6000 | ZN4000 | 1STQ005333B0000+EB6000 | | |
| EA1616 | EA1760 | EF6052 | EF6050 | EF6051 | ZN6000 | ZN5000 | 1STQ005333B0000+EB6000 | | |
| EA1616 | EA1760 | EF6062 | EF6060 | EF6061 | ZN6000 | ZN6000 | 1STQ005333B0000+EB6000 | | |
| EA1616 | EA1760 | EF6082 | EF6080 | EF6081 | ZN6000 | ZN8000 | 1STQ005333B0000+EB6000 | | |
| EA1616 | EA1760 | EF6012 | EF6010 | EF6011 | ZN6000 | ZN1000 | 1STQ005333B0000+EB6000 | | |
| EA1619 | EA1780 | 1STQ005427B0000 | - | - | ZN8000 | ZN3000 | 1STQ005333B0000+EB8000 | EV0002 EV0003 EV0006 | EA2113 |
| EA1619 | EA1780 | EF8042 | EF8040 | EF8041 | ZN8000 | ZN4000 | 1STQ005333B0000+EB8000 | | |
| EA1619 | EA1780 | EF8052 | EF8050 | EF8051 | ZN8000 | ZN5000 | 1STQ005333B0000+EB8000 | | |
| EA1619 | EA1780 | EF8062 | EF8060 | EF8061 | ZN8000 | ZN6000 | 1STQ005333B0000+EB8000 | | |
| EA1619 | EA1780 | EF8082 | EF8080 | EF8081 | ZN8000 | ZN8000 | 1STQ005333B0000+EB8000 | | |
| EA1619 | EA1780 | EF8012 | EF8010 | EF8011 | ZN8000 | ZN1000 | 1STQ005333B0000+EB8000 | | |
| EA1610 | EA1710 | EF1042 | EF1040 | EF1041 | ZN1000 | ZN4000 | - | EV0002 EV0003 EV0006 | EA2113 |
| EA1610 | EA1710 | EF1052 | EF1053 | EF1051 | ZN1000 | ZN5000 | - | | |
| EA1610 | EA1710 | EF1062 | EF1060 | EF1061 | ZN1000 | ZN6000 | - | | |
| EA1610 | EA1710 | EF1082 | EF1080 | EF1081 | ZN1000 | ZN8000 | - | | |
| EA1610 | EA1710 | EF1012 | EF1010 | EF1011 | ZN1000 | ZN1000 | - | | |
| EA1612 | EA1712 | 2xEF6043 | 2xEF6040 | 2xEF6041 | 2xZN6000 | ZN4000 | - | EV0002 EV0003 EV0006 | EA2113 |
| EA1612 | EA1712 | 2xEF6052 | 2xEF6051 | 2xEF6051 | 2xZN6000 | ZN5000 | - | | |
| EA1612 | EA1712 | 2xEF6062 | 2xEF6060 | 2xEF6061 | 2xZN6000 | ZN6000 | - | | |
| EA1612 | EA1712 | 2xEF6082 | 2xEF6080 | 2xEF6081 | 2xZN6000 | ZN8000 | - | | |

• Ordering codes 2–34 • In-depth technical information page 4–1 • Overall dimensions page 5–1

# IS2 kit version cabinets

## Selection of the structure - H=1800mm

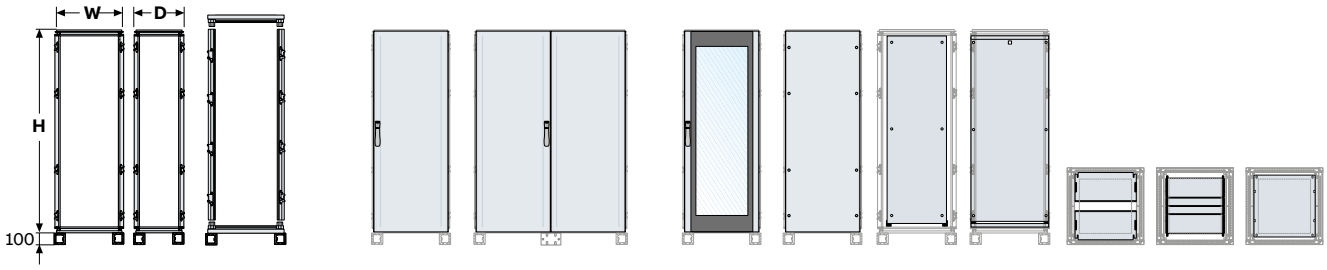


| External dimensions | | | | | Front/rear covers | | | | | | Mounting plate | | Incoming cable flanges | | |
|---|---|---|---|---|---|---|---|---|---|---|---|---|---|---|---|
| (H)* mm | (W) mm | (D) mm | Base/Top/Plinth | Uprights For structure | IP65 blind door | Blind doors for version with double door with overlapping closing [1] | IP65 Glazed door | IP65 Blind panel | Standard | Oversized + tracks | Sliding | Built up | Fixed |
| 1800 | 400 | 400 | EK4040KN | EM1800 | EC1840K | - | - | EP1840K | EA1841 | EA1940 | EF4040 | EF4041 | EF4042 |
| | **600** | | EK6040KN | | EC1860K | - | ET1860K | EP1860K | EA1860 | EA1960 | EF6040 | EF6041 | EF6043 |
| | **800** | | EK8040KN | | EC1880K | ED1804SK+ EC1880VC4K | ET1880K | EP1880K | EA1880 | EA1981 | EF8040 | EF8041 | EF8042 |
| | **1000** | | EK1040KN | | EC1810K | ED1810SK+ EC1880FC5K | ET1810K | EP1811K | EA1810 | EA1910 | EF1040 | EF1041 | EF1042 |
| | 1200 | | EK1240KN | | - | ED1812SK+ EC1880FC6K | - | EP1812K | EA1812 | EA1912 | 2xEF6040 | 2xEF6041 | 2xEF6043 |
| | **400** | 500 | EK4050KN | EM1800 | EC1840K | - | - | EP1840K | EA1841 | EA1940 | EF4050 | EF4051 | EF4052 |
| | **600** | | EK6050KN | | EC1860K | - | ET1860K | EP1860K | EA1860 | EA1960 | EF6050 | EF6051 | EF6052 |
| | **800** | | EK8050KN | | EC1880K | ED1804SK+ EC1880VC4K | ET1880K | EP1880K | EA1880 | EA1981 | EF8050 | EF8051 | EF8052 |
| | **1000** | | EK1050KN | | EC1810K | ED1810SK+ EC1880FC5K | ET1810K | EP1811K | EA1810 | EA1910 | EF1053 | EF1051 | EF1052 |
| | **1200** | | EK1250KN | | - | ED1812SK+ EC1880FC6K | - | EP1812K | EA1812 | EA1912 | 2xEF6050 | 2xEF6051 | 2xEF6052 |
| | 400 | 600 | EK4060KN | EM1800 | EC1840K | - | - | EP1840K | EA1841 | EA1940 | EF4060 | EF4061 | EF4063 |
| | **600** | | EK6060KN | | EC1860K | - | ET1860K | EP1860K | EA1860 | EA1960 | EF6060 | EF6061 | EF6062 |
| | **800** | | EK8060KN | | EC1880K | ED1804SK+ EC1880VC4K | ET1880K | EP1880K | EA1880 | EA1981 | EF8060 | EF8061 | EF8062 |
| | **1000** | | EK1060KN | | EC1810K | ED1810SK+ EC1880FC5K | ET1810K | EP1811K | EA1810 | EA1910 | EF1060 | EF1061 | EF1062 |
| | **1200** | | EK1260KN | | - | ED1812SK+ EC1880FC6K | - | EP1812K | EA1812 | EA1912 | 2xEF6060 | 2xEF6061 | 2xEF6062 |
| | **400** | 800 | EK4080KN | EM1800 | EC1840K | - | - | EP1840K | EA1841 | EA1940 | EF4080 | EF4081 | EF4082 |
| | 600 | | EK6080KN | | EC1860K | - | ET1860K | EP1860K | EA1860 | EA1960 | EF6080 | EF6081 | EF6082 |
| | **800** | | EK8080KN | | EC1880K | ED1804SK+ EC1880VC4K | ET1880K | EP1880K | EA1880 | EA1981 | EF8080 | EF8081 | EF8082 |
| | **1000** | | EK1080KN | | EC1810K | ED1810SK+ EC1880FC5K | ET1810K | EP1811K | EA1810 | EA1910 | EF1080 | EF1081 | EF1082 |
| | **1200** | | EK1280KN | | - | ED1812SK+ EC1880FC6K | - | EP1812K | EA1812 | EA1912 | 2xEF6080 | 2xEF6081 | 2xEF6082 |
| | **400** | 1000 | EK4010KN | EM1800 | EC1840K | - | - | EP1840K | EA1841 | EA1940 | EF4010 | EF4011 | EF4012 |
| | 600 | | EK6010KN | | EC1860K | - | ET1860K | EP1860K | EA1860 | EA1960 | EF6010 | EF6011 | EF6012 |
| | **800** | | EK8010KN | | EC1880K | ED1804SK+ EC1880VC4K | ET1880K | EP1880K | EA1880 | EA1981 | EF8010 | EF8011 | EF8012 |
| | **1000** | | EK1010KN | | EC1810K | ED1810SK+ EC1880FC5K | ET1810K | EP1811K | EA1810 | EA1910 | EF1010 | EF1011 | EF1012 |

(*) The useful height is always 100mm less than the external dimension of the enclosure. For the version with compartments, the useful height is 200mm less.

For versions with compartments see page 2-77, for modular versions see page 2-80.

[1] Double blind doors with intermediate upright EM1801, double glass doors with intermediate upright EM1801, and combinations of structures with internal cable container W=200/400mm available (see pag. 2-32, 2-33, 2-52 and 2-53).

[2] In the case of structures with internal cable container, select the correct rack frame which takes into account the 200/400mm of the cable container. For the new rack 19'' and relative accessories see page 2-85.

W=1600mm enclosures are only available in pre-assembled version with blind door (with overlapping door or intermediate upright).

[3] Rack frame W=600mm needs fixing brackets EB6000 and for an optional central fixing order a couple of crosspieces EB... see page 2-70 according to switchboard depth. Accessories from page 2-88.
Rack frame W=800mm needs fixing brackets EB8000 and for an optional central fixing order a couple of crosspieces EB... see page 2-70 according to switchboard depth. Moreover, fixing kits replacing brackets and crosspieces according to switchboard depth are available, codes on page 2-84. Accessories from page 2-88.
[4] Only available for W=800mm (even in structures with cable container with W=800mm available structure compartment). Order specific fixing kit EV0007.
Kit for placing structures side by side EV0002/EV0003/EV0006 see page 2-76.

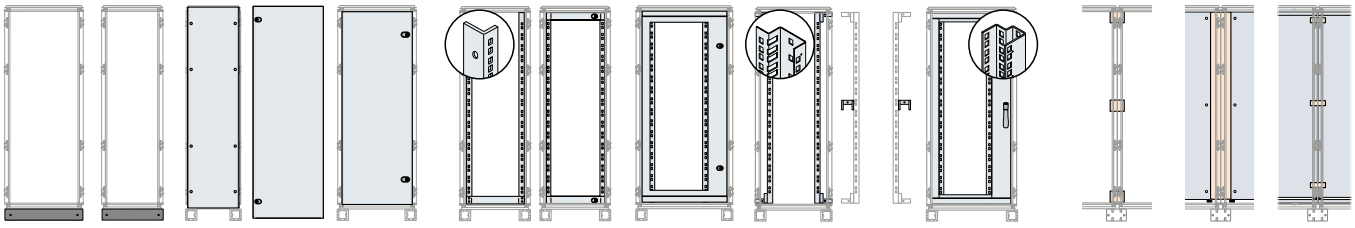

| Plinth flanges | | | | | Rack frames 19" "L" shaped profile[2] | | | Rack frames 19" | | | | | |
|---|---|---|---|---|---|---|---|---|---|---|---|---|---|
| | | | | | | Swing | | Fixed[3] | | Swing[4] | | | |
| Front/rear | Side | Pair of blind panels | Side door with closing box | Inner door | Fixed Centred | Centred W=600mm | Decentralized W=800mm | Frame+ Fixing kit | Optional central fixing kit | Frame+ Fixing kit | Side-by-side structure Kit | Standard plate joining Kit | Oversized plate joining Kit |
| ZN4000 | ZN4000 | EL1840K | EC1841K | - | - | - | - | - | - | - | EV0002 EV0003 EV0006 | EA1800 | EA2113 |
| ZN6000 | | | | EE1860K | EG1800 | EG1801K | - | EG1805+EB6000 | EB0400 | - | | | |
| ZN8000 | | | | EE1880K | EG1880 | - | EG1803K | EG1805+EB8000 | EB8001+EB0400 | EG1804K+EV0007 | | | |
| ZN1000 | | | | EE1810K | - | - | - | - | - | - | | | |
| 2xZN6000 | | | | - | - | - | - | - | - | - | | | |
| ZN4000 | ZN5000 | EL1850K | EC1851K | - | - | - | - | - | - | - | EV0002 EV0003 EV0006 | EA1800 | EA2113 |
| ZN6000 | | | | EE1860K | EG1800 | EG1801K | - | EG1805+EB6000 | EB0500 | - | | | |
| ZN8000 | | | | EE1880K | EG1880 | - | EG1803K | EG1805+EB8000 | EB8001+EB0500 | EG1804K+EV0007 | | | |
| ZN1000 | | | | EE1810K | - | - | - | - | - | - | | | |
| 2xZN6000 | | | | - | - | - | - | - | - | - | | | |
| ZN4000 | ZN6000 | EL1860K | EC1861K | - | - | - | - | - | - | - | EV0002 EV0003 EV0006 | EA1800 | EA2113 |
| ZN6000 | | | | EE1860K | EG1800 | EG1801K | - | EG1805+EB6000 | EB0600 | - | | | |
| ZN8000 | | | | EE1880K | EG1880 | - | EG1803K | EG1805+EB8000 | EB8001+EB0600 | EG1804K+EV0007 | | | |
| ZN1000 | | | | EE1810K | - | - | - | - | - | - | | | |
| 2xZN6000 | | | | - | - | - | - | - | - | - | | | |
| ZN4000 | ZN8000 | EL1880K | EC1881K | - | - | - | - | - | - | - | EV0002 EV0003 EV0006 | EA1800 | EA2113 |
| ZN6000 | | | | EE1860K | EG1800 | EG1801K | - | EG1805+EB6000 | EB0800 | - | | | |
| ZN8000 | | | | EE1880K | EG1880 | - | EG1803K | EG1805+EB8000 | EB8001+EB0800 | EG1804K+EV0007 | | | |
| ZN1000 | | | | EE1810K | - | - | - | - | - | - | | | |
| 2xZN6000 | | | | - | - | - | - | - | - | - | | | |
| ZN4000 | ZN1000 | EL1810K | EC1811K | - | - | - | - | - | - | - | EV0002 EV0003 EV0006 | EA1800 | EA2113 |
| ZN6000 | | | | EE1860K | EG1800 | EG1801K | - | EG1805+EB6000 | EB1000 | - | | | |
| ZN8000 | | | | EE1880K | EG1880 | - | EG1803K | EG1805+EB8000 | EB8001+EB1000 | EG1804K+EV0007 | | | |
| ZN1000 | | | | EE1810K | - | - | - | - | - | - | | | |

**Example of double door enclosure**

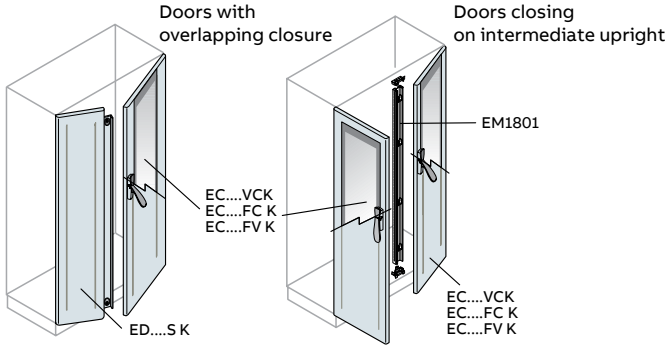


• Ordering codes 2–34 • In-depth technical information page 4–1 • Overall dimensions page 5–1

# IS2 kit version cabinets

## Selection of the structure - H=2000mm

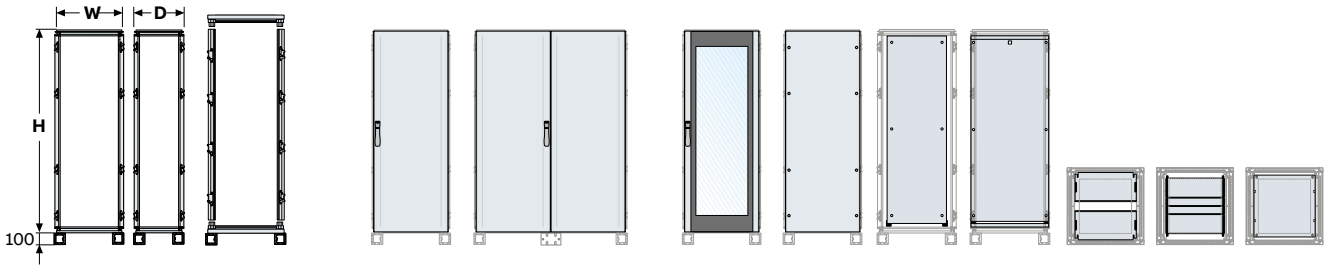


| External dimensions | | | | | Front/rear covers | | | | Back plates | | Incoming cable flanges | | |
|---|---|---|---|---|---|---|---|---|---|---|---|---|---|
| (H)* mm | (W) mm | (D) mm | Base/Top/Plinth | Uprights For structure | IP65 blind door | Blind doors for version with double door with overlapping closing [1] | IP65 Glazed door | IP65 Blind panel | Standard | Oversized + tracks | Sliding | Removable | Fixed |
| 2000 | 400 | 400 | EK4040KN | EM2000 | EC2040K | - | - | EP2041K | EA2040 | EA2140 | EF4040 | EF4041 | EF4042 |
| | **600** | | EK6040KN | | EC2060K | - | ET2060K | EP2060K | EA2060 | EA2161 | EF6040 | EF6041 | EF6043 |
| | **800** | | EK8040KN | | EC2080K | ED2004SK+ EC2080VC4K | ET2080K | EP2080K | EA2080 | EA2180 | EF8040 | EF8041 | EF8042 |
| | **1000** | | EK1040KN | | EC2012K | ED2010SK+ EC2080FC5K | ET2010K | EP2010K | EA2010 | EA2110 | EF1040 | EF1041 | EF1042 |
| | 1200 | | EK1240KN | | - | ED2012SK+ EC2080FC6K | - | EP2012K | EA2013 | EA2112 | 2xEF6040 | 2xEF6041 | 2xEF6043 |
| | **400** | 500 | EK4050KN | EM2000 | EC2040K | - | - | EP2041K | EA2040 | EA2140 | EF4050 | EF4051 | EF4052 |
| | **600** | | EK6050KN | | EC2060K | - | ET2060K | EP2060K | EA2060 | EA2161 | EF6050 | EF6051 | EF6052 |
| | **800** | | EK8050KN | | EC2080K | ED2004SK+ EC2080VC4K | ET2080K | EP2080K | EA2080 | EA2180 | EF8050 | EF8051 | EF8052 |
| | **1000** | | EK1050KN | | EC2012K | ED2010SK+ EC2080FC5K | ET2010K | EP2010K | EA2010 | EA2110 | EF1053 | EF1051 | EF1052 |
| | **1200** | | EK1250KN | | - | ED2012SK+ EC2080FC6K | - | EP2012K | EA2013 | EA2112 | 2xEF6050 | 2xEF6051 | 2xEF6052 |
| | 400 | 600 | EK4060KN | EM2000 | EC2040K | - | - | EP2041K | EA2040 | EA2140 | EF4060 | EF4061 | EF4063 |
| | **600** | | EK6060KN | | EC2060K | - | ET2060K | EP2060K | EA2060 | EA2161 | EF6060 | EF6061 | EF6062 |
| | **800** | | EK8060KN | | EC2080K | ED2004SK+ EC2080VC4K | ET2080K | EP2080K | EA2080 | EA2180 | EF8060 | EF8061 | EF8062 |
| | **1000** | | EK1060KN | | EC2012K | ED2010SK+ EC2080FC5K | ET2010K | EP2010K | EA2010 | EA2110 | EF1060 | EF1061 | EF1062 |
| | **1200** | | EK1260KN | | - | ED2012SK+ EC2080FC6K | - | EP2012K | EA2013 | EA2112 | 2xEF6060 | 2xEF6061 | 2xEF6062 |
| | **400** | 800 | EK4080KN | EM2000 | EC2040K | - | - | EP2041K | EA2040 | EA2140 | EF4080 | EF4081 | EF4082 |
| | 600 | | EK6080KN | | EC2060K | - | ET2060K | EP2060K | EA2060 | EA2161 | EF6080 | EF6081 | EF6082 |
| | **800** | | EK8080KN | | EC2080K | ED2004SK+ EC2080VC4K | ET2080K | EP2080K | EA2080 | EA2180 | EF8080 | EF8081 | EF8082 |
| | **1000** | | EK1080KN | | EC2012K | ED2010SK+ EC2080FC5K | ET2010K | EP2010K | EA2010 | EA2110 | EF1080 | EF1081 | EF1082 |
| | **1200** | | EK1280KN | | - | ED2012SK+ EC2080FC6K | - | EP2012K | EA2013 | EA2112 | 2xEF6080 | 2xEF6081 | 2xEF6082 |
| | **400** | 1000 | EK4010KN | EM2000 | EC2040K | - | - | EP2041K | EA2040 | EA2140 | EF4010 | EF4011 | EF4012 |
| | 600 | | EK6010KN | | EC2060K | - | ET2060K | EP2060K | EA2060 | EA2161 | EF6010 | EF6011 | EF6012 |
| | **800** | | EK8010KN | | EC2080K | ED2004SK+ EC2080VC4K | ET2080K | EP2080K | EA2080 | EA2180 | EF8010 | EF8011 | EF8012 |
| | **1000** | | EK1010KN | | EC2012K | ED2010SK+ EC2080FC5K | ET2010K | EP2010K | EA2010 | EA2110 | EF1010 | EF1011 | EF1012 |

(*) The useful height is always 100mm less than the external dimension of the enclosure. For the version with compartments, the useful height is 200mm less.

For versions with compartments see page 2-77, for modular versions see page 2-80.

[1] Double blind doors with intermediate upright EM1801, double glass doors with intermediate upright EM1801, and combinations of structures with internal cable container W=200/400mm available (see pag. 2-32, 2-33, 2-52 and 2-53).

[2] In the case of structures with internal cable container, select the correct rack frame which takes into account the 200/400mm of the cable container. For the new rack 19'' and relative accessories see page 2-85.

W=1600mm enclosures are only available in pre-assembled version with blind door (with overlapping door or intermediate upright).

[3] Rack frame W=600mm needs fixing brackets EB6000 and for an optional central fixing order a couple of crosspieces EB... see page 2-70 according to switchboard depth. Accessories from page 2-88.
Rack frame W=800mm needs fixing brackets EB8000 and for an optional central fixing order a couple of crosspieces EB... see page 2-70 according to switchboard depth. Moreover, fixing kits replacing brackets and crosspieces according to switchboard depth are available, codes on page 2-84. Accessories from page 2-88.
[4] Only available for W=800mm (even in structures with cable container with W=800mm available structure compartment). Order specific fixing kit EV0007.
Kit for placing structures side by side EV0002/EV0003/EV0006 see page 2-76.

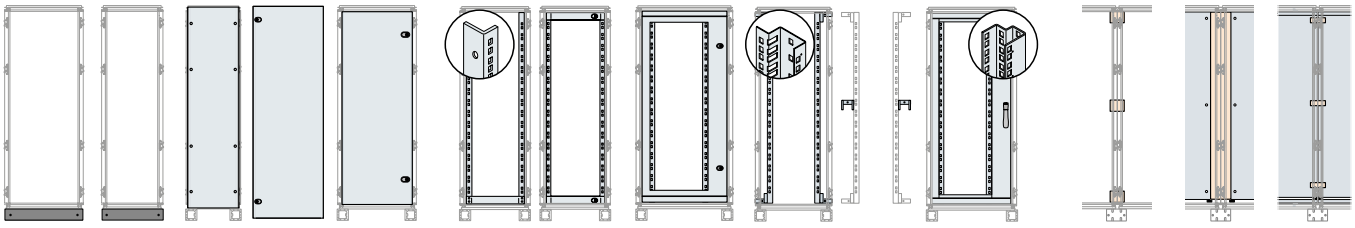

| Plinth flanges | | | | | Rack frames 19" "L" shaped profile[2] | | | Rack frames 19" | | | | | |
|---|---|---|---|---|---|---|---|---|---|---|---|---|---|
| | | | | | | Swing | | Fixed[3] | | Swing[4] | | | |
| Front/rear | Side | Pair of blind panels | Side door with closing box | Inner door | Fixed Centred | Centred W=600mm | Decentralized W=800mm | Frame+ Fixing kit | Optional central fixing kit | Frame+ Fixing kit | Side-by-side structure Kit | Standard plate joining Kit | Oversized plate joining Kit |
| ZN4000 | ZN4000 | EL2040K | EC2041K | - | - | - | - | - | - | - | EV0002 EV0003 EV0006 | EA2000 | EA2113 |
| ZN6000 | | | | EE2060K | EG2000 | EG2001K | - | EG2005+ EB6000 | EB0400 | - | | | |
| ZN8000 | | | | EE2080K | EG2080 | - | EG2003K | EG2005+ EB8000 | EB8001+ EB0400 | EG2004K+ EV0007 | | | |
| ZN1000 | | | | EE2010K | - | - | - | - | - | - | | | |
| 2xZN6000 | | | | - | - | - | - | - | - | - | | | |
| ZN4000 | ZN5000 | EL2050K | EC2051K | - | - | - | - | - | - | - | EV0002 EV0003 EV0006 | EA2000 | EA2113 |
| ZN6000 | | | | EE2060K | EG2000 | EG2001K | - | EG2005+ EB6000 | EB0500 | - | | | |
| ZN8000 | | | | EE2080K | EG2080 | - | EG2003K | EG2005+ EB8000 | EB8001+ EB0500 | EG2004K+ EV0007 | | | |
| ZN1000 | | | | EE2010K | - | - | - | - | - | - | | | |
| 2xZN6000 | | | | - | - | - | - | - | - | - | | | |
| ZN4000 | ZN6000 | EL2060K | EC2061K | - | - | - | - | - | - | - | EV0002 EV0003 EV0006 | EA2000 | EA2113 |
| ZN6000 | | | | EE2060K | EG2000 | EG2001K | - | EG2005+ EB6000 | EB0600 | - | | | |
| ZN8000 | | | | EE2080K | EG2080 | - | EG2003K | EG2005+ EB6000 | EB8001+ EB0600 | EG2004K+ EV0007 | | | |
| ZN1000 | | | | EE2010K | - | - | - | - | - | - | | | |
| 2xZN6000 | | | | - | - | - | - | - | - | - | | | |
| ZN4000 | ZN8000 | EL2080K | EC2081K | - | - | - | - | - | - | - | EV0002 EV0003 EV0006 | EA2000 | EA2113 |
| ZN6000 | | | | EE2060K | EG2000 | EG2001K | - | EG2005+ EB6000 | EB0800 | - | | | |
| ZN8000 | | | | EE2080K | EG2080 | - | EG2003K | EG2005+ EB8000 | EB8001+ EB0800 | EG2004K+ EV0007 | | | |
| ZN1000 | | | | EE2010K | - | - | - | - | - | - | | | |
| 2xZN6000 | | | | - | - | - | - | - | - | - | | | |
| ZN4000 | ZN1000 | EL2012K | EC2011K | - | - | - | - | - | - | - | EV0002 EV0003 EV0006 | EA2000 | EA2113 |
| ZN6000 | | | | EE2060K | EG2000 | EG2001K | - | EG2005+ EB6000 | EB1000 | - | | | |
| ZN8000 | | | | EE2080K | EG2080 | - | EG2003K | EG2005+ EB8000 | EB8001+ EB1000 | EG2004K+ EV0007 | | | |
| ZN1000 | | | | EE2010K | - | - | - | - | - | - | | | |

**Example of double door enclosure**

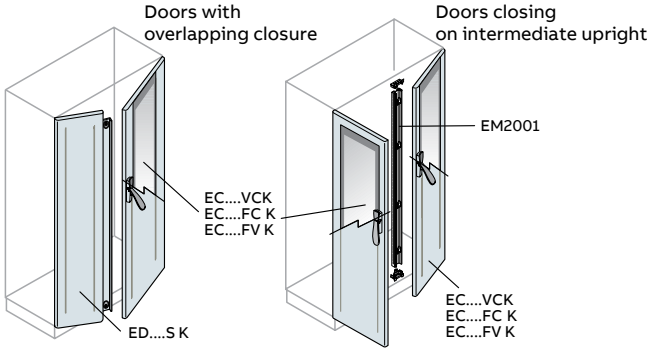


• Ordering codes 2–34 • In-depth technical information page 4–1 • Overall dimensions page 5–1

# IS2 kit version cabinets

## Selection of the structure - H=2200mm

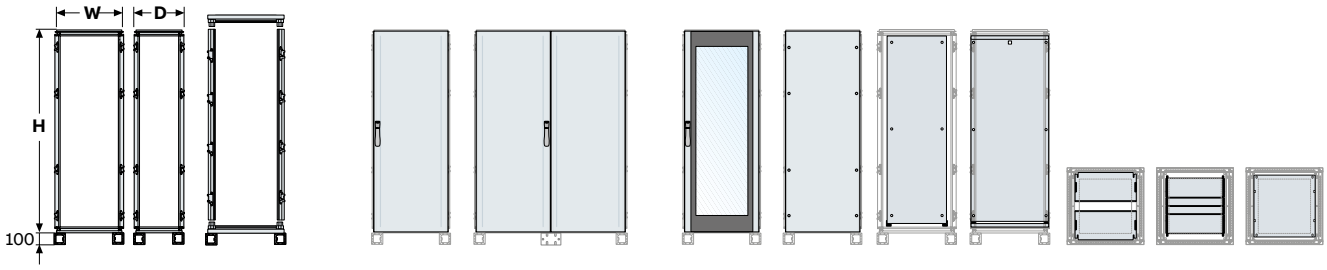


| External dimensions | | | | | Front/rear covers | | | | Back plates | | Incoming cable flanges | | |
|---|---|---|---|---|---|---|---|---|---|---|---|---|---|
| (H)* mm | (W) mm | (D) mm | Base/Top/Plinth | Uprights For structure | IP65 blind door | Blind doors for version with double door with overlapping closing [1] | IP65 Glazed door | IP65 Blind panel | Standard | Oversized + tracks | Sliding | Removable | Fixed |
| 2200 | 400 | 400 | EK4040KN | EM2200 | EC2240K | - | - | EP2240K | EA2240 | EA2340 | EF4040 | EF4041 | EF4042 |
| | **600** | | EK6040KN | | EC2260K | - | ET2260K | EP2260K | EA2260 | EA2360 | EF6040 | EF6041 | EF6043 |
| | **800** | | EK8040KN | | EC2280K | ED2204SK+ EC2280VC4K | ET2280K | EP2280K | EA2280 | EA2380 | EF8040 | EF8041 | EF8042 |
| | **1000** | | EK1040KN | | EC2210K | ED2210SK+ EC2280FC5K | ET2211K | EP2210K | EA2210 | EA2310 | EF1040 | EF1041 | EF1042 |
| | 1200 | | EK1240KN | | - | ED2212SK+ EC2280FC6K | - | EP2212K | EA2212 | EA2312 | 2xEF6040 | 2xEF6041 | 2xEF6043 |
| | **400** | 500 | EK4050KN | EM2200 | EC2240K | - | - | EP2240K | EA2240 | EA2340 | EF4050 | EF4051 | EF4052 |
| | **600** | | EK6050KN | | EC2260K | - | ET2260K | EP2260K | EA2260 | EA2360 | EF6050 | EF6051 | EF6052 |
| | **800** | | EK8050KN | | EC2280K | ED2204SK+ EC2280VC4K | ET2280K | EP2280K | EA2280 | EA2380 | EF8050 | EF8051 | EF8052 |
| | **1000** | | EK1050KN | | EC2210K | ED2210SK+ EC2280FC5K | ET2211K | EP2210K | EA2210 | EA2310 | EF1053 | EF1051 | EF1052 |
| | **1200** | | EK1250KN | | - | ED2212SK+ EC2280FC6K | - | EP2212K | EA2212 | EA2312 | 2xEF6050 | 2xEF6051 | 2xEF6052 |
| | 400 | 600 | EK4060KN | EM2200 | EC2240K | - | - | EP2240K | EA2240 | EA2340 | EF4060 | EF4061 | EF4063 |
| | **600** | | EK6060KN | | EC2260K | - | ET2260K | EP2260K | EA2260 | EA2360 | EF6060 | EF6061 | EF6062 |
| | **800** | | EK8060KN | | EC2280K | ED2204SK+ EC2280VC4K | ET2280K | EP2280K | EA2280 | EA2380 | EF8060 | EF8061 | EF8062 |
| | **1000** | | EK1060KN | | EC2210K | ED2210SK+ EC2280FC5K | ET2211K | EP2210K | EA2210 | EA2310 | EF1060 | EF1061 | EF1062 |
| | **1200** | | EK1260KN | | - | ED2212SK+ EC2280FC6K | - | EP2212K | EA2212 | EA2312 | 2xEF6060 | 2xEF6061 | 2xEF6062 |
| | **400** | 800 | EK4080KN | EM2200 | EC2240K | - | - | EP2240K | EA2240 | EA2340 | EF4080 | EF4081 | EF4082 |
| | 600 | | EK6080KN | | EC2260K | - | ET2260K | EP2260K | EA2260 | EA2360 | EF6080 | EF6081 | EF6082 |
| | **800** | | EK8080KN | | EC2280K | ED2204SK+ EC2280VC4K | ET2280K | EP2280K | EA2280 | EA2380 | EF8080 | EF8081 | EF8082 |
| | **1000** | | EK1080KN | | EC2210K | ED2210SK+ EC2280FC5K | ET2211K | EP2210K | EA2210 | EA2310 | EF1080 | EF1081 | EF1082 |
| | **1200** | | EK1280KN | | - | ED2212SK+ EC2280FC6K | - | EP2212K | EA2212 | EA2312 | 2xEF6080 | 2xEF6081 | 2xEF6082 |
| | **400** | 1000 | EK4010KN | EM2200 | EC2240K | - | - | EP2240K | EA2240 | EA2340 | EF4010 | EF4011 | EF4012 |
| | 600 | | EK6010KN | | EC2260K | - | ET2260K | EP2260K | EA2260 | EA2360 | EF6010 | EF6011 | EF6012 |
| | **800** | | EK8010KN | | EC2280K | ED2204SK+ EC2280VC4K | ET2280K | EP2280K | EA2280 | EA2380 | EF8010 | EF8011 | EF8012 |
| | **1000** | | EK1010KN | | EC2210K | ED2210SK+ EC2280FC5K | ET2211K | EP2210K | EA2210 | EA2310 | EF1010 | EF1011 | EF1012 |

(*) The useful height is always 100mm less than the external dimension of the enclosure. For the version with compartments, the useful height is 200mm less.

For versions with compartments see page 2-77, for modular versions see page 2-80.

[1] Double blind doors with intermediate upright EM1801, double glass doors with intermediate upright EM1801, and combinations of structures with internal cable container W=200/400mm available (see pag. 2-32, 2-33, 2-52 and 2-53).

[2] In the case of structures with internal cable container, select the correct rack frame which takes into account the 200/400mm of the cable container. For the new rack 19'' and relative accessories see page 2-85.

W=1600mm enclosures are only available in pre-assembled version with blind door (with overlapping door or intermediate upright).

[3] Rack frame W=600mm needs fixing brackets EB6000 and for an optional central fixing order a couple of crosspieces EB... see page 2-70 according to switchboard depth. Accessories from page 2-88.
Rack frame W=800mm needs fixing brackets EB8000 and for an optional central fixing order a couple of crosspieces EB... see page 2-70 according to switchboard depth. Moreover, fixing kits replacing brackets and crosspieces according to switchboard depth are available, codes on page 2-84. Accessories from page 2-88.
[4] Only available for W=800mm (even in structures with cable container with W=800mm available structure compartment). Order specific fixing kit EV0007.
Kit for placing structures side by side EV0002/EV0003/EV0006 see page 2-76.

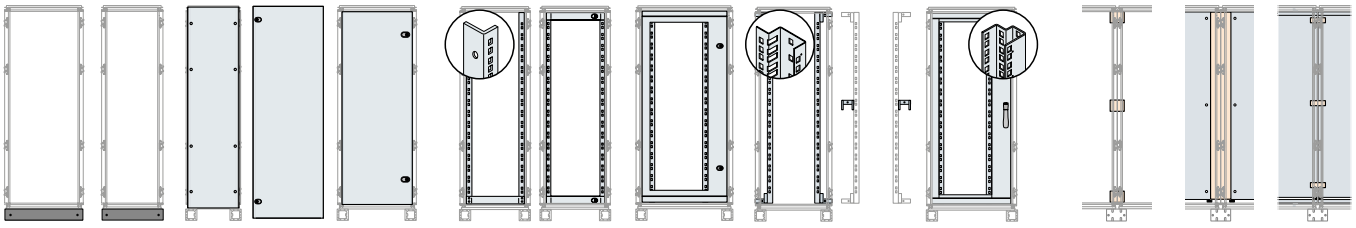

| Plinth flanges | | | | | Rack frames 19" "L" shaped profile[2] | | | Rack frames 19" | | | | | |
|---|---|---|---|---|---|---|---|---|---|---|---|---|---|
| | | | | | | Swing | | Fixed[3] | | Swing[4] | | | |
| Front/rear | Side | Pair of blind panels | Side door with closing box | Inner door | Fixed Centred | Centred W=600mm | Decentralized W=800mm | Frame+ Fixing kit | Optional central fixing kit | Frame+ Fixing kit | Side-by-side structure Kit | Standard plate joining Kit | Oversized plate joining Kit |
| ZN4000 | ZN4000 | EL2240K | EC 2241K | - | - | - | - | - | - | - | EV0002 EV0003 EV0006 | EA2200 | EA2113 |
| ZN6000 | | | | EE2260K | EG2200 | EG2201K | - | EG2205+ EB6000 | EB0400 | - | | | |
| ZN8000 | | | | EE2280K | EG2280 | - | EG2203K | EG2205+ EB8000 | EB8001+ EB0400 | EG2204K+ EV0007 | | | |
| ZN1000 | | | | EE2210K | - | - | - | - | - | - | | | |
| 2xZN6000 | | | | - | - | - | - | - | - | - | | | |
| ZN4000 | ZN5000 | EL2250K | EC 2251K | - | - | - | - | - | - | - | EV0002 EV0003 EV0006 | EA2200 | EA2113 |
| ZN6000 | | | | EE2260K | EG2200 | EG2201K | - | EG2205+ EB6000 | EB0500 | - | | | |
| ZN8000 | | | | EE2280K | EG2280 | - | EG2203K | EG2205+ EB8000 | EB8001+ EB0500 | EG2204K+ EV0007 | | | |
| ZN1000 | | | | EE2210K | - | - | - | - | - | - | | | |
| 2xZN6000 | | | | - | - | - | - | - | - | - | | | |
| ZN4000 | ZN6000 | EL2260K | EC 2261K | - | - | - | - | - | - | - | EV0002 EV0003 EV0006 | EA2200 | EA2113 |
| ZN6000 | | | | EE2260K | EG2200 | EG2201K | - | EG2205+ EB6000 | EB0600 | - | | | |
| ZN8000 | | | | EE2280K | EG2280 | - | EG2203K | EG2205+ EB8000 | EB8001+ EB0600 | EG2204K+ EV0007 | | | |
| ZN1000 | | | | EE2210K | - | - | - | - | - | - | | | |
| 2xZN6000 | | | | - | - | - | - | - | - | - | | | |
| ZN4000 | ZN8000 | EL2280K | EC 2281K | - | - | - | - | - | - | - | EV0002 EV0003 EV0006 | EA2200 | EA2113 |
| ZN6000 | | | | EE2260K | EG2200 | EG2201K | - | EG2205+ EB6000 | EB0800 | - | | | |
| ZN8000 | | | | EE2280K | EG2280 | - | EG2203K | EG2205+ EB8000 | EB8001+ EB0800 | EG2204K+ EV0007 | | | |
| ZN1000 | | | | EE2210K | - | - | - | - | - | - | | | |
| 2xZN6000 | | | | - | - | - | - | - | - | - | | | |
| ZN4000 | ZN1000 | EL2210K | EC 2211K | - | - | - | - | - | - | - | EV0002 EV0003 EV0006 | EA2200 | EA2113 |
| ZN6000 | | | | EE2260K | EG2200 | EG2201K | - | EG2205+ EB6000 | EB1000 | - | | | |
| ZN8000 | | | | EE2280K | EG2280 | - | EG2203K | EG2205+ EB8000 | EB8001+ EB1000 | EG2204K+ EV0007 | | | |
| ZN1000 | | | | EE2210K | - | - | - | - | - | - | | | |

**Example of double door enclosure**

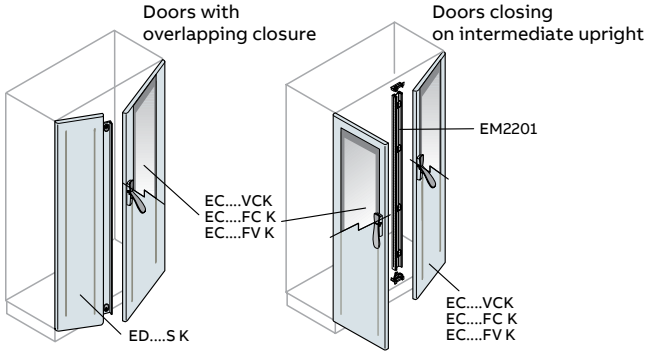


• Ordering codes 2–34 • In-depth technical information page 4–1 • Overall dimensions page 5–1

# IS2 kit version cabinets

## Single doors for making the double door version

| | | | Double doors<br>Closure on door with overlapping (without intermediate upright) | | Double doors<br>Closure on door with intermediate upright | | |
|---|---|---|---|---|---|---|---|
| **Structure W=600mm** | | | **Door W=200mm** | **Door W=400mm** | **Door W=200mm** | **Door W=400mm** | **Intermediate upright** |
| 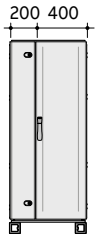 | H=1800mm | blind | ED1802SK | EC1880VC4K | EC1880VC2K | EC1880VC4K | EM1801 |
| | | glazed | - | - | - | - | |
| | H=2000mm | blind | ED2002SK | EC1880VC4K | EC2080VC2K | EC2080VC4K | EM2001 |
| | | glazed | - | - | - | - | |
| | H=2200mm | blind | ED2202SK | EC2280VC4K | EC2280VC2K | EC2280VC4K | EM2201 |
| | | glazed | - | - | - | - | |
| **Structure W=800mm** | | | **Door W=200mm** | **Door W=600mm** | **Door W=200mm** | **Door W=600mm** | **Intermediate upright** |
| 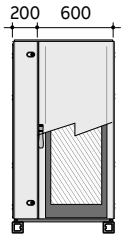 | H=1800mm | blind | ED1802SK | EC1880FC6K | EC1880VC2K | EC1880FC6K | EM1801 |
| | | glazed | - | EC1880FV6K | | EC1880FV6K | |
| | H=2000mm | blind | ED2002SK | EC2080FC6K | EC2080VC2K | EC2080FC6K | EM2001 |
| | | glazed | - | EC2080FV6K | | EC2080FV6K | |
| | H=2200mm | blind | ED2202SK | EC2280FC6K | EC2280VC2K | EC2280FC6K | EM2201 |
| | | glazed | - | EC2280FV6K | | EC2280FV6K | |
| | | | **Door W=400mm** | **Door W=400mm** | **Door W=400mm** | **Door W=400mm** | **Intermediate upright** |
| 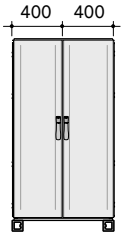 | H=1800mm | blind | ED1804SK | EC1880VC4K | EC1880VC4K | EC1880VC4K | EM1801 |
| | | glazed | - | - | - | - | |
| | H=2000mm | blind | ED2004SK | EC2080VC4K | EC2080VC4K | EC2080VC4K | EM2001 |
| | | glazed | - | - | - | - | |
| | H=2200mm | blind | ED2204SK | EC2280VC4K | EC2280VC4K | EC2280VC4K | EM2201 |
| | | glazed | - | - | - | - | |

| | | | Double doors<br>Closure on door with overlapping (without intermediate upright) | | Double doors<br>Closure on door with intermediate upright | | |
|---|---|---|---|---|---|---|---|
| **Structure W=1000mm** | | | **Door W=200mm** | **Door W=800mm** | **Door W=200mm** | **Door W=800mm** | **Intermediate upright** |
| 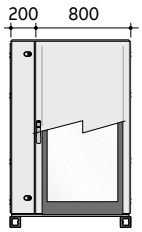 | H=1800mm | blind | ED1802SK | EC1880FC8K | EC1880VC2K | EC1880FC8K | EM1801 |
| | | glazed | - | EC1880FV8K | - | EC1880FV8K | |
| | H=2000mm | blind | ED2002SK | EC2080FC8K | EC2080VC2K | EC2080FC8K | EM2001 |
| | | glazed | - | EC2080FV8K | - | EC2080FV8K | |
| | H=2200mm | blind | ED2202SK | EC2280FC8K | EC2280VC2K | EC2280FC8K | EM2201 |
| | | glazed | - | EC2280FV8K | - | EC2280FV8K | |
| | | | **Door W=400mm** | **Door W=600mm** | **Door W=400mm** | **Door W=600mm** | **Intermediate upright** |
| 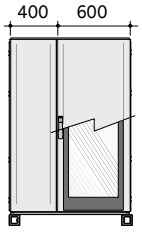 | H=1800mm | blind | ED1804SK | EC1880FC6K | EC1880VC4K | EC1880FC6K | EM1801 |
| | | glazed | - | EC1880FV6K | - | EC1880FV6K | |
| | H=2000mm | blind | ED2004SK | EC2080FC6K | EC2080VC4K | EC2080FC6K | EM2001 |
| | | glazed | - | EC2080FV6K | - | EC2080FV6K | |
| | H=2200mm | blind | ED2204SK | EC2280FC6K | EC2280VC4K | EC2280FC6K | EM2201 |
| | | glazed | - | EC2280FV6K | - | EC2280FV6K | |
| | | | **Door W=500mm** | **Door W=500mm** | **Door W=500mm** | **Door W=500mm** | **Intermediate upright** |
| 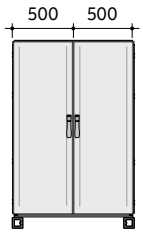 | H=1800mm | blind | ED1810SK | EC1880FC5K | EC1880FC5K | EC1880FC5K | EM1801 |
| | | glazed | - | - | - | - | |
| | H=2000mm | blind | ED2010SK | EC2080FC5K | EC2080FC5K | EC2080FC5K | EM2001 |
| | | glazed | - | - | - | - | |
| | H=2200mm | blind | ED2210SK | EC2280FC5K | EC2280FC5K | EC2280FC5K | EM2201 |
| | | glazed | - | - | - | - | |
| **Structure W=1200mm** | | | **Door W=400mm** | **Door W=800mm** | **Door W=400mm** | **Door W=800mm** | **Intermediate upright** |
| 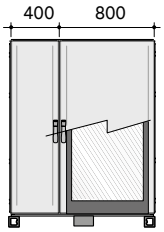 | H=1800mm | blind | ED1804SK | EC1880FC8K | EC1880VC4K | EC1880FC8K | EM1801 |
| | | glazed | - | EC1880FV8K | - | EC1880FV8K | |
| | H=2000mm | blind | ED2004SK | EC2080FC8K | EC2080VC4K | EC2080FC8K | EM2001 |
| | | glazed | - | EC2080FV8K | - | EC2080FV8K | |
| | H=2200mm | blind | ED2204SK | EC2280FC8K | EC2280VC4K | EC2280FC8K | EM2201 |
| | | glazed | - | EC2280FV8K | - | EC2280FV8K | |
| | | | **Door W=600mm** | **Door W=600mm** | **Door W=600mm** | **Door W=600mm** | **Intermediate upright** |
| | H=1400mm | blind | ED1412SK | EC1480FC6K | - | - | - |
| 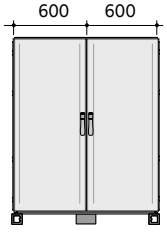 | H=1600mm | blind | ED1612SK | EC1680FC6K | - | - | - |
| | H=1800mm | blind | ED1812SK | EC1880FC6K | EC1880FC6K | EC1880FC6K | EM1801 |
| | | glazed | - | EC1880FV6K | EC1880FV6K | EC1880FV6K | |
| | H=2000mm | blind | ED2012SK | EC2080FC6K | EC2080FC6K | EC2080FC6K | EM2001 |
| | | glazed | - | EC2080FV6K | EC2080FV6K | EC2080FV6K | |
| | H=2200mm | blind | ED2012SK | EC2280FC6K | EC2280FC6K | EC2280FC6K | EM2201 |
| | | glazed | - | EC2280FV6K | EC2280FV6K | EC2280FV6K | |

**Structure W=1600mm**

W=1600mm enclosures are only available in pre-assembled version with blind door (with overlapping door or intermediate upright).

# IS2 kit version cabinets
## Ordering codes

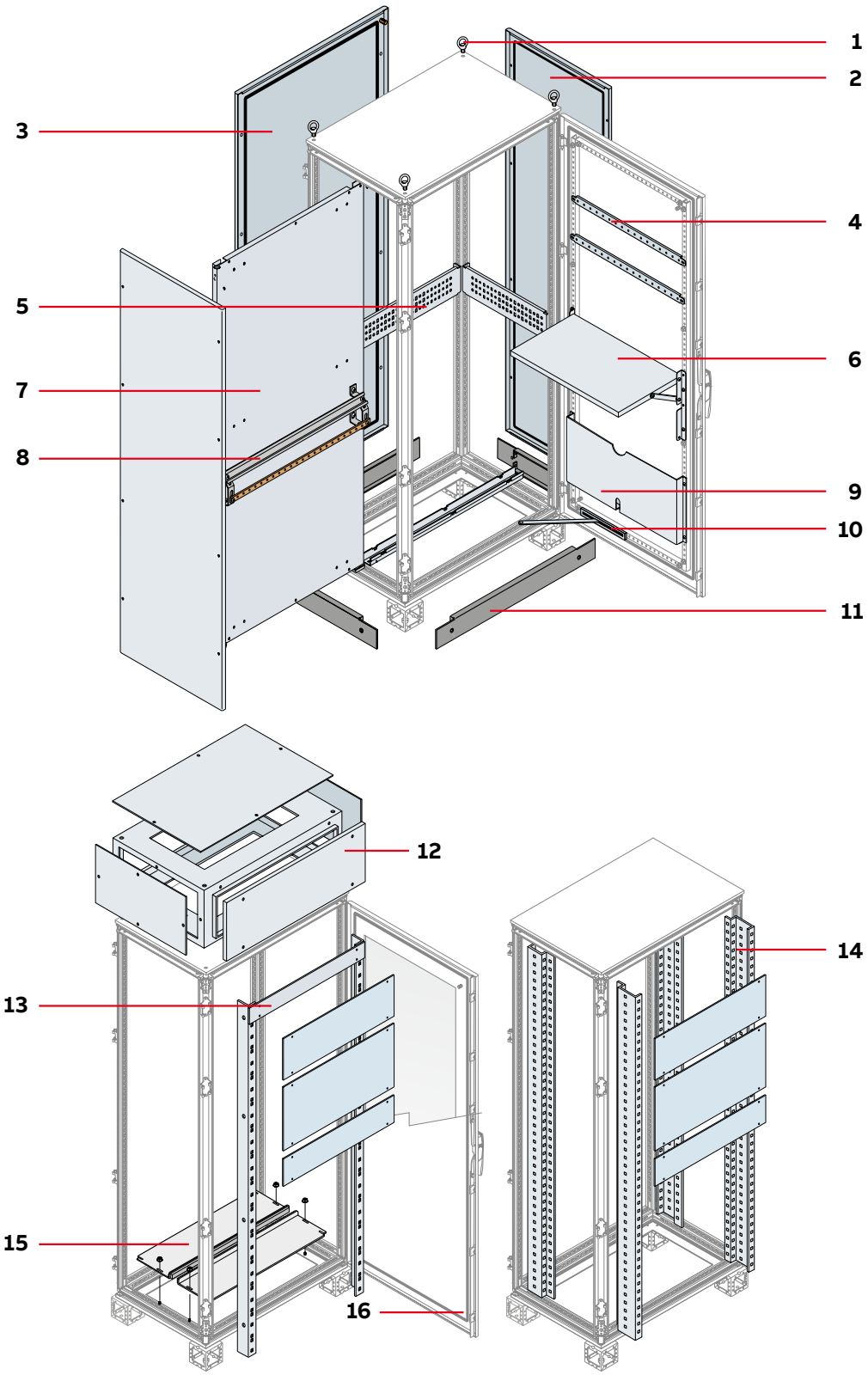


**1**
**Lifting eyebolts**
Page 2-113

**2**
**Side panels**
Page 2-55

**3**
**Rear panels**
Page 2-54

**4**
**Reinforcemet profiles for door**
Page 2-109

**5**
**Crosspieces for accessories**
Page 2-70

**6**
**Folding shelf for door**
Page 2-110

**7**
**Mounting plate**
Page 2-64

**8**
**Angled supports for terminal boxes and earthing busbars**
Page 2-99

**9**
**Document pocket**
Page 2-110

**10**
**Anti-closing device for door**
Page 2-110

**11**
**Cover flanges for plinth**
Page 2-62

**12**
**Top container for cable connection**
Page 2-75

**13**
**Rack frame 19" "L" shaped profile**
Page 2-85

**14**
**"Rack frame 19" cranked shape uprights and other rack 19"**
Page 2-86

**15**
**Cable entry flanges**
Page 2-57

**16**
**Blind doors, glass doors and aerated doors**
Page 2-50

• Quick selection table 2–12 • In-depth technical information page 4–1 • Overall dimensions page 5–1

# IS2 kit version cabinets

## Ordering codes

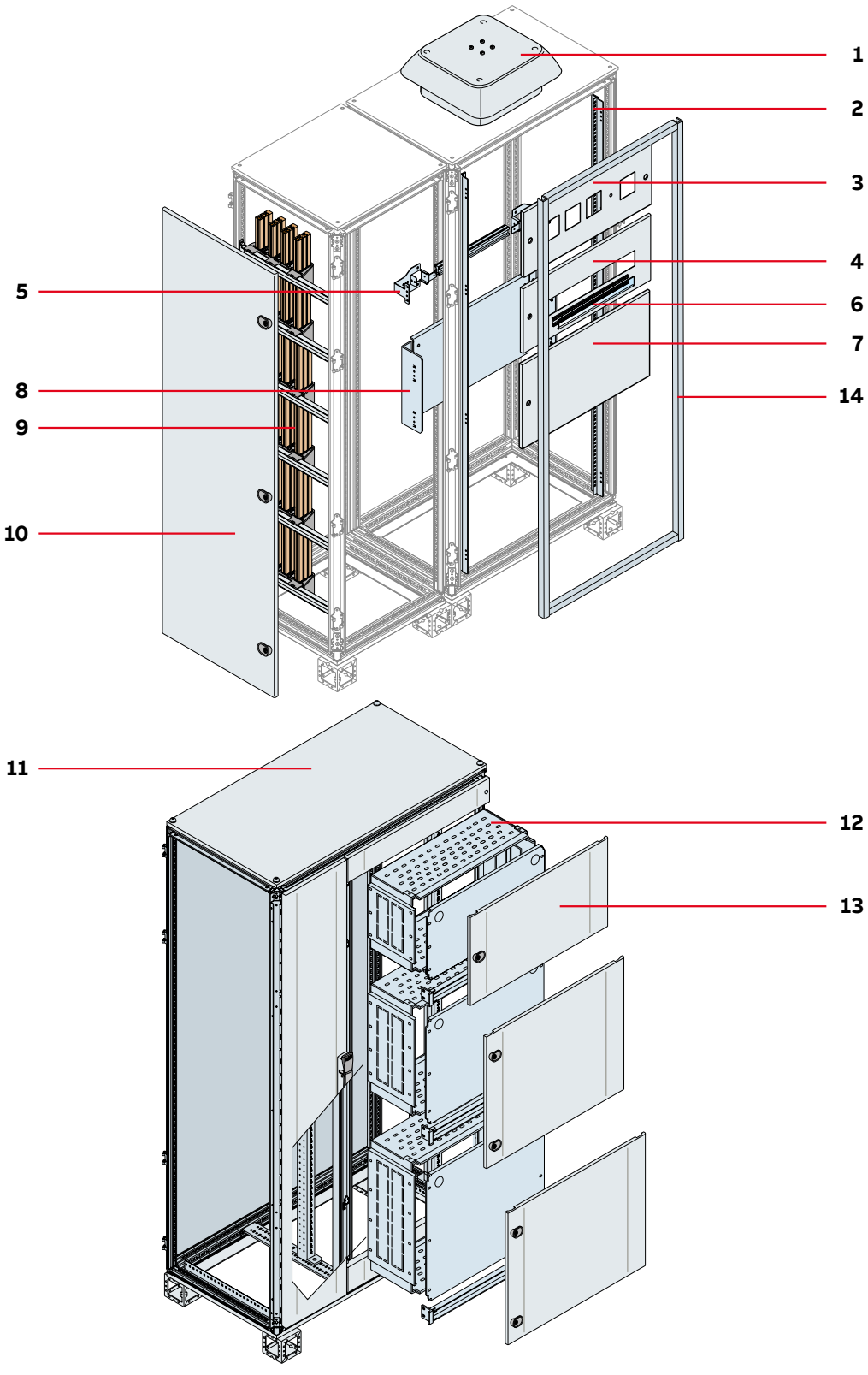


**1**
**Temperature management**
Page 2-102

**2**
**DIN uprights for modular apparatus**
Page 2-80

**3**
**Modular panels for square measuring instruments**
Page 2-83

**4**
**DIN panels for modular apparatus**
Page 2-82

**5**
**DIN rail kit for uprights for modular apparatus**
Page 2-80

**6**
**Accessories for panels**
Page 2-84

**7**
**Blind panels for uprights for modular apparatus**
Page 2-82

**8**
**Mounting plates for uprights for modular apparatus**
Page 2-81

**9**
**Distribution system**
Page 2-92

**10**
**Side doors**
Page 2-56

**11**
**Cabinets for configuration with compartments**
Page 2-45

**12**
**Compatments cubicles**
Page 2-78

**13**
**Front panels for compart-ments**
Page 2-79

**14**
**P31 closing profile**
Page 2-50

• Quick selection table 2–12 • In-depth technical information page 4–1 • Overall dimensions page 5–1

# IS2 Enclosures

## Ordering codes - Pre-assembled structures



**Cabinet with blind door**

Structure with removable roof, complete with blind door and rear panel, plinth H=100mm consisting of four angle pieces. To be completed with plinth flanges, cable entry flanges and side panels.

| Dimensions (mm) | | | | Package/ No. of pieces |
|---|---|---|---|---|
| H | W | D | Code | |
| 1400 | 400 | 400 | 1STQ005349B0000 | 1/1 |
| | | 600 | 1STQ005361B0000 | 1/1 |
| | | 800 | 1STQ005365B0000 | 1/1 |
| | 600 | 300 | 1STQ005346B0000 | 1/1 |
| | | 400 | 1STQ005350B0000 | 1/1 |
| | | 500 | 1STQ005357B0000 | 1/1 |
| | | 600 | 1STQ005362B0000 | 1/1 |
| | | 800 | 1STQ005366B0000 | 1/1 |
| | 800 | 300 | 1STQ005347B0000 | 1/1 |
| | | 400 | 1STQ005351B0000 | 1/1 |
| | | 500 | 1STQ005358B0000 | 1/1 |
| | | 600 | 1STQ005363B0000 | 1/1 |
| | | 800 | 1STQ005367B0000 | 1/1 |
| | 1000 | 300 | 1STQ005348B0000 | 1/1 |
| | | 400 | 1STQ005352B0000 | 1/1 |
| | | 500 | 1STQ005359B0000 | 1/1 |
| 1600 | 400 | 500 | 1STQ005377B0000 | 1/1 |
| | | 600 | 1STQ005382B0000 | 1/1 |
| | | 800 | 1STQ005387B0000 | 1/1 |
| | | 1000 | 1STQ005392B0000 | 1/1 |
| | 600 | 300 | 1STQ005369B0000 | 1/1 |
| | | 400 | 1STQ005371B0000 | 1/1 |
| | | 500 | 1STQ005378B0000 | 1/1 |
| | | 600 | 1STQ005383B0000 | 1/1 |
| | | 800 | 1STQ005388B0000 | 1/1 |
| | | 1000 | 1STQ005393B0000 | 1/1 |
| | 800 | 300 | 1STQ005370B0000 | 1/1 |
| | | 400 | 1STQ005372B0000 | 1/1 |
| | | 500 | 1STQ005379B0000 | 1/1 |
| | | 600 | 1STQ005384B0000 | 1/1 |
| | | 800 | 1STQ005389B0000 | 1/1 |
| | | 1000 | 1STQ005394B0000 | 1/1 |
| | 1000 | 400 | 1STQ005373B0000 | 1/1 |
| | | 500 | 1STQ005380B0000 | 1/1 |
| | | 600 | 1STQ005385B0000 | 1/1 |
| | | 800 | 1STQ005390B0000 | 1/1 |
| | | 1000 | 1STQ005395B0000 | 1/1 |
| 1800 | 400 | 400 | ES1844K | 1/1 |
| | | 500 | ES1845K | 1/1 |
| | | 600 | ES1846K | 1/1 |
| | | 800 | ES1848K | 1/1 |
| | | 1000 | ES1840K | 1/1 |
| | 600 | 400 | ES1864K | 1/1 |
| | | 500 | ES1865K | 1/1 |
| | | 600 | ES1866K | 1/1 |
| | | 800 | ES1868K | 1/1 |
| | | 1000 | ES1860K | 1/1 |
| | 800 | 400 | ES1884K | 1/1 |
| | | 500 | ES1885K | 1/1 |
| | | 600 | ES1886K | 1/1 |
| | | 800 | ES1888K | 1/1 |
| | | 1000 | ES1880K | 1/1 |
| | 1000 | 400 | ES1804K | 1/1 |
| | | 500 | ES1805K | 1/1 |
| | | 600 | ES1806K | 1/1 |
| | | 800 | ES1808K | 1/1 |
| | | 1000 | ES1800K | 1/1 |

**CONTINUED**

# IS2 Enclosures

## Ordering codes - Pre-assembled structures



**Cabinet with blind door**

Structure with removable roof, complete with blind door and rear panel, plinth H=100mm consisting of four angle pieces. To be completed with plinth flanges, cable entry flanges and side panels.

| Dimensions (mm) | | | | Package/ No. of pieces |
|---|---|---|---|---|
| H | W | D | Code | |
| 2000 | 400 | 400 | ES2044K | 1/1 |
| | | 500 | ES2045K | 1/1 |
| | | 600 | ES2046K | 1/1 |
| | | 800 | ES2048K | 1/1 |
| | | 1000 | ES2040K | 1/1 |
| | 600 | 400 | ES2064K | 1/1 |
| | | 500 | ES2065K | 1/1 |
| | | 600 | ES2066K | 1/1 |
| | | 800 | ES2068K | 1/1 |
| | | 1000 | ES2060K | 1/1 |
| | 800 | 400 | ES2084K | 1/1 |
| | | 500 | ES2085K | 1/1 |
| | | 600 | ES2086K | 1/1 |
| | | 800 | ES2089K | 1/1 |
| | | 1000 | ES2080K | 1/1 |
| | 1000 | 400 | ES2004K | 1/1 |
| | | 500 | ES2007K | 1/1 |
| | | 600 | ES2006K | 1/1 |
| | | 800 | ES2008K | 1/1 |
| | | 1000 | ES2000K | 1/1 |
| 2200 | 400 | 400 | ES2244K | 1/1 |
| | | 500 | ES2245K | 1/1 |
| | | 600 | ES2246K | 1/1 |
| | | 800 | ES2248K | 1/1 |
| | | 1000 | ES2240K | 1/1 |
| | 600 | 400 | ES2264K | 1/1 |
| | | 500 | ES2265K | 1/1 |
| | | 600 | ES2266K | 1/1 |
| | | 800 | ES2268K | 1/1 |
| | | 1000 | ES2260K | 1/1 |
| | 800 | 400 | ES2284K | 1/1 |
| | | 500 | ES2285K | 1/1 |
| | | 600 | ES2287K | 1/1 |
| | | 800 | ES2288K | 1/1 |
| | | 1000 | ES2280K | 1/1 |
| | 1000 | 400 | ES2204K | 1/1 |
| | | 500 | ES2205K | 1/1 |
| | | 600 | ES2206K | 1/1 |
| | | 800 | ES2208K | 1/1 |
| | | 1000 | ES2200K | 1/1 |

Examples of configuration and technical characteristics at page 2-118.

# IS2 Enclosures

## Ordering codes - Pre-assembled structures

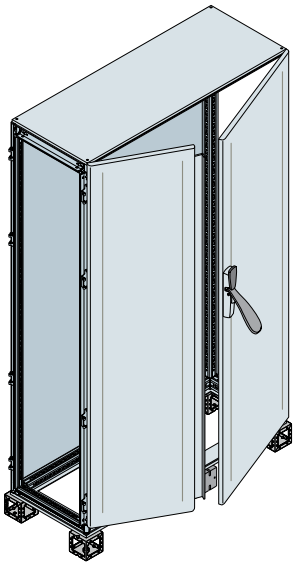

**Cabinets with double blind door with overlapping closure**

Structure with removable roof complete with double blind door and rear panel, plinth H=100mm made up of four angle pieces. The versions with double door include a pair of crosspieces mounted in depth and an intermediate upright (removable) for door closure. The cabinets 1200/1600mm wide include the intermediate plinth.
To be completed with plinth flanges, cable entry flanges and side panels.

| Dimensions (mm) | | | | Package/ No. of pieces |
|---|---|---|---|---|
| H | W | D | Code | |
| 1400 | 1200 | 400 | 1STQ005353B0000 | 1/1 |
| | | 500 | 1STQ005360B0000 | 1/1 |
| | | 600 | 1STQ005364B0000 | 1/1 |
| | | 800 | 1STQ005368B0000 | 1/1 |
| 1600 | 1200 | 400 | 1STQ005374B0000 | 1/1 |
| | | 500 | 1STQ005381B0000 | 1/1 |
| | | 600 | 1STQ005386B0000 | 1/1 |
| | | 800 | 1STQ005391B0000 | 1/1 |
| 1800 | 1000 | 400 | ES1814BK | 1/1 |
| | | 500 | ES1815BK | 1/1 |
| | | 600 | ES1876BK | 1/1 |
| | | 800 | ES1818BK | 1/1 |
| | | 1000 | ES1810BK | 1/1 |
| | 1200 | 400 | ES1824BK | 1/1 |
| | | 500 | ES1827BK | 1/1 |
| | | 600 | ES1826BK | 1/1 |
| | | 800 | ES1828BK | 1/1 |
| | 1600 | 500 | ES1875BK | 1/1 |
| | | 600 | ES1876BK | 1/1 |
| | | 800 | ES1878BK | 1/1 |
| 2000 | 1000 | 400 | ES2014BK | 1/1 |
| | | 500 | ES2015BK | 1/1 |
| | | 600 | ES2016BK | 1/1 |
| | | 800 | ES2018BK | 1/1 |
| | | 1000 | ES2010BK | 1/1 |
| | 1200 | 400 | ES2024BK | 1/1 |
| | | 500 | ES2025BK | 1/1 |
| | | 600 | ES2026BK | 1/1 |
| | | 800 | ES2028BK | 1/1 |
| | 1600 | 500 | ES2075BK | 1/1 |
| | | 600 | ES2076BK | 1/1 |
| | | 800 | ES2078BK | 1/1 |
| 2200 | 1000 | 400 | ES2214BK | 1/1 |
| | | 500 | ES2215BK | 1/1 |
| | | 600 | ES2216BK | 1/1 |
| | | 800 | ES2218BK | 1/1 |
| | | 1000 | ES2210BK | 1/1 |
| | 1200 | 400 | ES2224BK | 1/1 |
| | | 500 | ES2225BK | 1/1 |
| | | 600 | ES2226BK | 1/1 |
| | | 800 | ES2228BK | 1/1 |
| | 1600 | 500 | ES2275BK | 1/1 |
| | | 600 | ES2276BK | 1/1 |
| | | 800 | ES2279BK | 1/1 |

Examples of configuration and technical characteristics at page 2-118.

# IS2 Enclosures

## Ordering codes - Pre-assembled structures

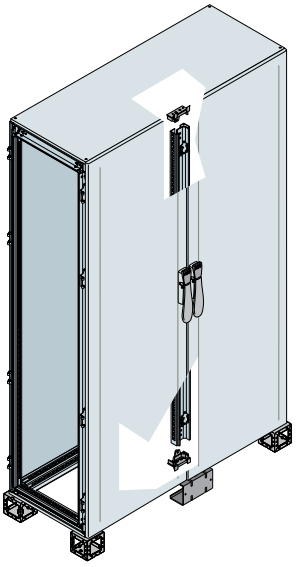

**Cabinets with double blind door with overlapping closure on intermediate upright**
Structure with removable roof complete with double blind door and rear panel, plinth H=100mm made up of four angle pieces. The versions with double door include a pair of crosspieces mounted in depth and an intermediate upright (removable) for door closure. The cabinets 1200/1600mm wide include the intermediate plinth.
To be completed with plinth flanges, cable entry flanges and side panels.

| Dimensions (mm) | | | | Package/ No. of pieces |
|---|---|---|---|---|
| H | W | D | Code | |
| 1800 | 1000 | 400 | ES1814K | 1/1 |
| | | 500 | ES1815K | 1/1 |
| | | 600 | ES1816K | 1/1 |
| | | 800 | ES1818K | 1/1 |
| | | 1000 | ES1810K | 1/1 |
| | 1200 | 400 | ES1824K | 1/1 |
| | | 500 | ES1827K | 1/1 |
| | | 600 | ES1826K | 1/1 |
| | | 800 | ES1828K | 1/1 |
| | 1600 | 500 | ES1875K | 1/1 |
| | | 600 | ES1876K | 1/1 |
| | | 800 | ES1878K | 1/1 |
| 2000 | 1000 | 400 | ES2014K | 1/1 |
| | | 500 | ES2015K | 1/1 |
| | | 600 | ES2016K | 1/1 |
| | | 800 | ES2018K | 1/1 |
| | | 1000 | ES2010K | 1/1 |
| | 1200 | 400 | ES2024K | 1/1 |
| | | 500 | ES2025K | 1/1 |
| | | 600 | ES2026K | 1/1 |
| | | 800 | ES2028K | 1/1 |
| | 1600 | 500 | ES2075K | 1/1 |
| | | 600 | ES2076K | 1/1 |
| | | 800 | ES2078K | 1/1 |
| 2200 | 1000 | 400 | ES2214K | 1/1 |
| | | 500 | ES2215K | 1/1 |
| | | 600 | ES2216K | 1/1 |
| | | 800 | ES2218K | 1/1 |
| | | 1000 | ES2210K | 1/1 |
| | 1200 | 400 | ES2224K | 1/1 |
| | | 500 | ES2225K | 1/1 |
| | | 600 | ES2226K | 1/1 |
| | | 800 | ES2228K | 1/1 |
| | 1600 | 500 | ES2275K | 1/1 |
| | | 600 | ES2276K | 1/1 |
| | | 800 | ES2279K | 1/1 |

Examples of configuration and technical characteristics at page 2-118.

# IS2 Enclosures

## Ordering codes - Pre-assembled structures

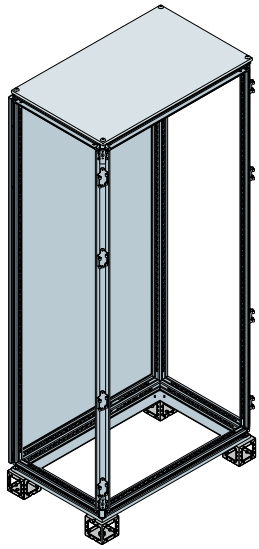

**Cabinets without front door**

Structures with removable roof complete with rear panel, plinth H=100mm made up of four angle pieces. To be completed with door, plinth flanges, cable entry flanges and side panels.

| Dimensions (mm) | | | | Package/ No. of pieces |
|---|---|---|---|---|
| H | W | D | Code | |
| 1800 | 600 | 400 | ES1864SPK | 1/1 |
| | | 500 | ES1865SPK | 1/1 |
| | | 600 | ES1866SPK | 1/1 |
| | 800 | 400 | ES1884SPK | 1/1 |
| | | 600 | ES1886SPK | 1/1 |
| 2000 | 600 | 400 | ES2064SPK | 1/1 |
| | | 500 | ES2065SPK | 1/1 |
| | | 600 | ES2066SPK | 1/1 |
| | 800 | 400 | ES2084SPK | 1/1 |
| | | 500 | ES2085SPK | 1/1 |
| | | 600 | ES2086SPK | 1/1 |
| | | 800 | ES2089SPK | 1/1 |

For the codes listed, the Custom Made Service (assembly of accessories/special painting/special drilling) is not provided.

• Quick selection table 2–6 • In-depth technical information page 4–1 • Overall dimensions page 5–1

# IS2 Enclosures

## Ordering codes - Pre-assembled structures



**Cabinet with glazed door**

Structure with removable roof, complete with glazed door and rear panel, plinth H=100mm consisting of four angle pieces.
To be completed with plinth flanges, cable entry flanges and side panels.

| Dimensions (mm) | | | | Package/ No. of pieces |
|---|---|---|---|---|
| H | W | D | Code | |
| 1400 | 600 | 400 | 1STQ005355B0000 | 1/1 |
| | 800 | 300 | 1STQ005354B0000 | 1/1 |
| | | 400 | 1STQ005356B0000 | 1/1 |
| 1600 | 600 | 400 | 1STQ005375B0000 | 1/1 |
| | 800 | 400 | 1STQ005376B0000 | 1/1 |
| 1800 | 600 | 400 | ES1864VK | 1/1 |
| | | 500 | ES1865VK | 1/1 |
| | | 600 | ES1866VK | 1/1 |
| | | 800 | ES1868VK | 1/1 |
| | | 1000 | ES1860VK | 1/1 |
| | 800 | 400 | ES1884VK | 1/1 |
| | | 500 | ES1885VK | 1/1 |
| | | 600 | ES1886VK | 1/1 |
| | | 800 | ES1888VK | 1/1 |
| | | 1000 | ES1880VK | 1/1 |
| | 1000 | 400 | ES1804VK | 1/1 |
| | | 500 | ES1805VK | 1/1 |
| | | 600 | ES1806VK | 1/1 |
| | | 800 | ES1808VK | 1/1 |
| | | 1000 | ES1800VK | 1/1 |
| 2000 | 600 | 400 | ES2064VK | 1/1 |
| | | 500 | ES2065VK | 1/1 |
| | | 600 | ES2066VK | 1/1 |
| | | 800 | ES2068VK | 1/1 |
| | | 1000 | ES2060VK | 1/1 |
| | 800 | 400 | ES2084VK | 1/1 |
| | | 500 | ES2085VK | 1/1 |
| | | 600 | ES2086VK | 1/1 |
| | | 800 | ES2088VK | 1/1 |
| | | 1000 | ES2080VK | 1/1 |
| | 1000 | 400 | ES2004VK | 1/1 |
| | | 500 | ES2005VK | 1/1 |
| | | 600 | ES2006VK | 1/1 |
| | | 800 | ES2008VK | 1/1 |
| | | 1000 | ES2000VK | 1/1 |
| 2200 | 600 | 400 | ES2264VK | 1/1 |
| | | 500 | ES2265VK | 1/1 |
| | | 600 | ES2266VK | 1/1 |
| | | 800 | ES2268VK | 1/1 |
| | | 1000 | ES2260VK | 1/1 |
| | 800 | 400 | ES2284VK | 1/1 |
| | | 500 | ES2285VK | 1/1 |
| | | 600 | ES2286VK | 1/1 |
| | | 800 | ES2288VK | 1/1 |
| | | 1000 | ES2280VK | 1/1 |
| | 1000 | 400 | ES2204VK | 1/1 |
| | | 500 | ES2205VK | 1/1 |
| | | 600 | ES2206VK | 1/1 |
| | | 800 | ES2208VK | 1/1 |
| | | 1000 | ES2200VK | 1/1 |

• Quick selection table 2–6 • In-depth technical information page 4–1 • Overall dimensions page 5–1

# IS2 Enclosures

## Ordering codes - Pre-assembled structures

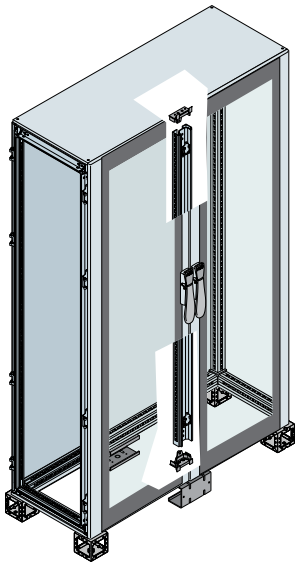

**Cabinets with double glazed door with overlapping closure on intermediate upright**
Structure with removable roof complete with glazed door and rear panel, plinth H=100mm made up of six angle pieces. The versions with double door include a pair of crosspieces mounted in depth and an intermediate upright (removable) for door closure.
To be completed with plinth flanges, cable entry flanges and side panels.

| Dimensions (mm) | | | | Package/ No. of pieces |
|---|---|---|---|---|
| H | W | D | Code | |
| 1800 | 1200 | 400 | ES1824VK | 1/1 |
| | | 500 | ES1825VK | 1/1 |
| | | 600 | ES1826VK | 1/1 |
| | | 800 | ES1828VK | 1/1 |
| 2000 | 1200 | 400 | ES2024VK | 1/1 |
| | | 500 | ES2025VK | 1/1 |
| | | 600 | ES2026VK | 1/1 |
| | | 800 | ES2028VK | 1/1 |
| 2200 | 1200 | 400 | ES2224VK | 1/1 |
| | | 500 | ES2225VK | 1/1 |
| | | 600 | ES2226VK | 1/1 |
| | | 800 | ES2228VK | 1/1 |

• Quick selection table 2–6 • In-depth technical information page 4–1 • Overall dimensions page 5–1

# IS2 Enclosures

## Ordering codes - Pre-assembled structures



**Blind door cabinets with internal cable container W=200-400mm**

Structure with removable roof, complete with blind door + cable container door, upright, intermediate crosspiece and rear panel, plinth H=100mm consisting of four angle pieces. The cabinets with 1200mm width include the intermediate plinth. To be completed with plinth flanges, cable entry flanges and side panels.

| Dimensions (mm) | | | Internal cable container (mm) | | Package/ No. of pieces |
|---|---|---|---|---|---|
| H | W | D | W | Code | |
| 1800 | 800 | 400 | 200 | ES1884FV2K | 1/1 |
| | | 500 | | ES1885FV2K | 1/1 |
| | | 600 | | ES1886FV2K | 1/1 |
| | | 800 | | ES1888FV2K | 1/1 |
| | 1000 | 400 | | ES1804FV2K | 1/1 |
| | | 500 | | ES1805FV2K | 1/1 |
| | | 600 | | ES1806FV2K | 1/1 |
| | | 800 | | ES1808FV2K | 1/1 |
| | 1000 | 400 | 400 | ES1804FV4K | 1/1 |
| | | 500 | | ES1805FV4K | 1/1 |
| | | 600 | | ES1806FV4K | 1/1 |
| | | 800 | | ES1808FV4K | 1/1 |
| | 1200 | 400 | | ES1824FV4K | 1/1 |
| | | 500 | | ES1825FV4K | 1/1 |
| | | 600 | | ES1826FV4K | 1/1 |
| | | 800 | | ES1828FV4K | 1/1 |
| 2000 | 800 | 400 | 200 | ES2084FV2K | 1/1 |
| | | 500 | | ES2085FV2K | 1/1 |
| | | 600 | | ES2086FV2K | 1/1 |
| | | 800 | | ES2088FV2K | 1/1 |
| | 1000 | 400 | | ES2004FV2K | 1/1 |
| | | 500 | | ES2005FV2K | 1/1 |
| | | 600 | | ES2006FV2K | 1/1 |
| | | 800 | | ES2008FV2K | 1/1 |
| | 1000 | 400 | 400 | ES2004FV4K | 1/1 |
| | | 500 | | ES2005FV4K | 1/1 |
| | | 600 | | ES2006FV4K | 1/1 |
| | | 800 | | ES2008FV4K | 1/1 |
| | 1200 | 400 | | ES2024FV4K | 1/1 |
| | | 500 | | ES2025FV4K | 1/1 |
| | | 600 | | ES2026FV4K | 1/1 |
| | | 800 | | ES2028FV4K | 1/1 |
| 2200 | 800 | 400 | 200 | ES2284FV2K | 1/1 |
| | | 500 | | ES2285FV2K | 1/1 |
| | | 600 | | ES2286FV2K | 1/1 |
| | | 800 | | ES2288FV2K | 1/1 |
| | 1000 | 400 | | ES2204FV2K | 1/1 |
| | | 500 | | ES2205FV2K | 1/1 |
| | | 600 | | ES2206FV2K | 1/1 |
| | | 800 | | ES2208FV2K | 1/1 |
| | 1000 | 400 | 400 | ES2204FV4K | 1/1 |
| | | 500 | | ES2205FV4K | 1/1 |
| | | 600 | | ES2206FV4K | 1/1 |
| | | 800 | | ES2208FV4K | 1/1 |
| | 1200 | 400 | | ES2224FV4K | 1/1 |
| | | 500 | | ES2225FV4K | 1/1 |
| | | 600 | | ES2226FV4K | 1/1 |
| | | 800 | | ES2228FV4K | 1/1 |

The cable container can be mounted on the right or left side in the structure. Specify this at the time of ordering or enclose a drawing.

• Quick selection table 2–6 • In-depth technical information page 4–1 • Overall dimensions page 5–1

# IS2 Enclosures

## Ordering codes - Pre-assembled structures

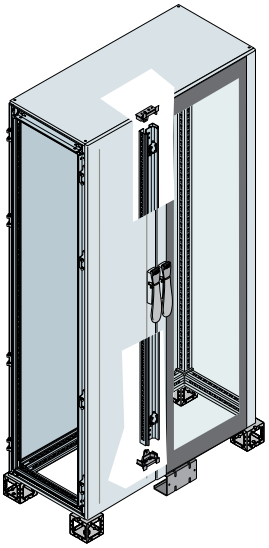

**Glazed door cabinets with cable container W=200-400mm**

Structure with removable roof, complete with glazed door + cable container door, upright, intermediate crosspiece and rear panel, plinth H=100mm consisting of four angle pieces. The cabinets with 1200mm width include the intermediate plinth. To be completed with plinth flanges, cable entry flanges and side panels.

| Dimensions (mm) | | | Internal cable container (mm) | | Package/ No. of pieces |
|---|---|---|---|---|---|
| H | W | D | W | Code | |
| 1800 | 800 | 400 | 200 | ES1884VC2K | 1/1 |
| | | 500 | | ES1885VC2K | 1/1 |
| | | 600 | | ES1886VC2K | 1/1 |
| | | 800 | | ES1888VC2K | 1/1 |
| | 1000 | 400 | | ES1804VC2K | 1/1 |
| | | 500 | | ES1805VC2K | 1/1 |
| | | 600 | | ES1806VC2K | 1/1 |
| | | 800 | | ES1808VC2K | 1/1 |
| | 1000 | 400 | 400 | ES1804VC4K | 1/1 |
| | | 500 | | ES1805VC4K | 1/1 |
| | | 600 | | ES1806VC4K | 1/1 |
| | | 800 | | ES1808VC4K | 1/1 |
| | 1200 | 400 | | ES1824VC4K | 1/1 |
| | | 500 | | ES1825VC4K | 1/1 |
| | | 600 | | ES1826VC4K | 1/1 |
| | | 800 | | ES1828VC4K | 1/1 |
| 2000 | 800 | 400 | 200 | ES2084VC2K | 1/1 |
| | | 500 | | ES2085VC2K | 1/1 |
| | | 600 | | ES2086VC2K | 1/1 |
| | | 800 | | ES2088VC2K | 1/1 |
| | 1000 | 400 | | ES2004VC2K | 1/1 |
| | | 500 | | ES2005VC2K | 1/1 |
| | | 600 | | ES2006VC2K | 1/1 |
| | | 800 | | ES2008VC2K | 1/1 |
| | 1000 | 400 | 400 | ES2004VC4K | 1/1 |
| | | 500 | | ES2005VC4K | 1/1 |
| | | 600 | | ES2006VC4K | 1/1 |
| | | 800 | | ES2008VC4K | 1/1 |
| | 1200 | 400 | | ES2024VC4K | 1/1 |
| | | 500 | | ES2025VC4K | 1/1 |
| | | 600 | | ES2026VC4K | 1/1 |
| | | 800 | | ES2028VC4K | 1/1 |
| 2200 | 800 | 400 | 200 | ES2284VC2K | 1/1 |
| | | 500 | | ES2285VC2K | 1/1 |
| | | 600 | | ES2286VC2K | 1/1 |
| | | 800 | | ES2288VC2K | 1/1 |
| | 1000 | 400 | | ES2204VC2K | 1/1 |
| | | 500 | | ES2205VC2K | 1/1 |
| | | 600 | | ES2206VC2K | 1/1 |
| | | 800 | | ES2208VC2K | 1/1 |
| | 1000 | 400 | 400 | ES2204VC4K | 1/1 |
| | | 500 | | ES2205VC4K | 1/1 |
| | | 600 | | ES2206VC4K | 1/1 |
| | | 800 | | ES2208VC4K | 1/1 |
| | 1200 | 400 | | ES2224VC4K | 1/1 |
| | | 500 | | ES2225VC4K | 1/1 |
| | | 600 | | ES2226VC4K | 1/1 |
| | | 800 | | ES2228VC4K | 1/1 |

The cable container can be mounted on the right or left side in the structure. Specify this at the time of ordering or enclose a drawing.

• Quick selection table 2–6 • In-depth technical information page 4–1 • Overall dimensions page 5–1

# IS2 Enclosures

## Ordering codes - Pre-assembled structures

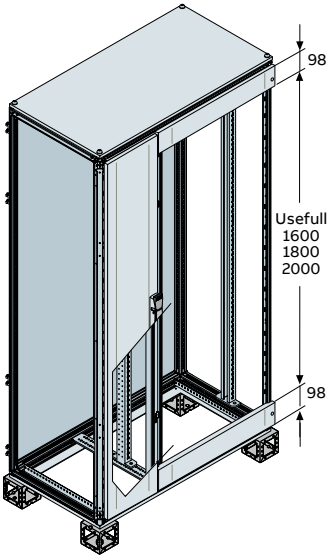


**Cabinets for configuration with compartments**

Pre-assembled self-supporting structure made of galvanised steel, consisting of a closed section drilled with 25mm pitch preset for mounting the compartment cubicles and partial doors. Removable roof, plinth H=100mm (consisting of four angle pieces 2,5mm), complete with rear panel. The structures with internal compartment W=200mm are supplied complete with blind door with opposite opening (standard hinging on the left), double box with double tongue key. The structures with internal compartment W=400mm are supplied complete with blind door with opposite opening (standard hinging on the left), fixed handle with double tongue key. Both versions are complete with removable intermediate upright and pair of top/bottom crosspieces and uprights. The useful dimension is always 200mm less than the total height of the enclosure. To be completed with plinth flanges, cable entry flanges and side panels. Compensation panels H=100mm are included in the supply. Maximum segregation Form 3a.

| Dimensions (mm) | | | Internal cable container* (mm) | | Package/ No. of pieces |
|---|---|---|---|---|---|
| H | W | D | W | Code | |
| 1800 | 400 | 600 | - | ES1864MFK | 1/1 |
| | | 800 | - | ES1884MFK | 1/1 |
| | | 800 | 200 | ES1884MF2K | 1/1 |
| | | 1000 | 200 | ES1804MF2K | 1/1 |
| | | 1000 | 400 | ES1804MF4K | 1/1 |
| | | 1200 | 400 | ES1824MF4K | 1/1 |
| | 500 | 600 | - | ES1865MFK | 1/1 |
| | | 800 | - | ES1885MFK | 1/1 |
| | | 800 | 200 | ES1885MF2K | 1/1 |
| | | 1000 | 200 | ES1805MF2K | 1/1 |
| | | 1000 | 400 | ES1805MF4K | 1/1 |
| | | 1200 | 400 | ES1825MF4K | 1/1 |
| | 600 | 600 | - | ES1866MFK | 1/1 |
| | | 800 | - | ES1886MFK | 1/1 |
| | | 800 | 200 | ES1886MF2K | 1/1 |
| | | 1000 | 200 | ES1806MF2K | 1/1 |
| | | 1000 | 400 | ES1806MF4K | 1/1 |
| | | 1200 | 400 | ES1826MF4K | 1/1 |
| | 800 | 600 | - | ES1868MFK | 1/1 |
| | | 800 | - | ES1888MFK | 1/1 |
| | | 800 | 200 | ES1888MF2K | 1/1 |
| | | 1000 | 200 | ES1808MF2K | 1/1 |
| | | 1000 | 400 | ES1808MF4K | 1/1 |
| | | 1200 | 400 | ES1828MF4K | 1/1 |
| | 1000 | 600 | - | ES1860MFK | 1/1 |
| | | 800 | - | ES1880MFK | 1/1 |
| | | 800 | 200 | ES1880MF2K | 1/1 |
| | | 1000 | 200 | ES1800MF2K | 1/1 |
| | | 1000 | 400 | ES1800MF4K | 1/1 |
| 2000 | 400 | 600 | - | ES2064MFK | 1/1 |
| | | 800 | - | ES2084MFK | 1/1 |
| | | 800 | 200 | ES2084MF2K | 1/1 |
| | | 1000 | 200 | ES2004MF2K | 1/1 |
| | | 1000 | 400 | ES2004MF4K | 1/1 |
| | | 1200 | 400 | ES2024MF4K | 1/1 |
| | 500 | 600 | - | ES2065MFK | 1/1 |
| | | 800 | - | ES2085MFK | 1/1 |
| | | 800 | 200 | ES2085MF2K | 1/1 |
| | | 1000 | 200 | ES2005MF2K | 1/1 |
| | | 1000 | 400 | ES2005MF4K | 1/1 |
| | | 1200 | 400 | ES2025MF4K | 1/1 |

**CONTINUED**

* Versions inclusive of pair of crosspieces mounted depth-wise and of intermediate upright for door closure.
The cable container can be mounted on the right or left side in the structure. Specify this at the time of ordering.
Examples of configuration and technical characteristics at page 2-120.

# IS2 Enclosures

## Ordering codes - Pre-assembled structures

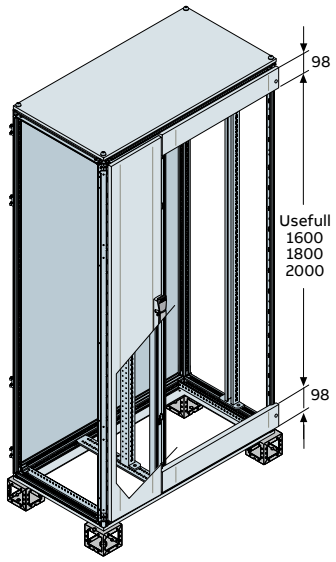


**Cabinets for configuration with compartments**

Pre-assembled self-supporting structure made of galvanised steel, consisting of a closed section drilled with 25mm pitch preset for mounting the compartment cubicles and partial doors. Removable roof, plinth H=100mm (consisting of four angle pieces 2,5mm), complete with rear panel. The structures with internal compartment W=200mm are supplied complete with blind door with opposite opening (standard hinging on the left), double box with double tongue key. The structures with internal compartment W=400mm are supplied complete with blind door with opposite opening (standard hinging on the left), fixed handle with double tongue key. Both versions are complete with removable intermediate upright and pair of top/bottom crosspieces and uprights. The useful dimension is always 200mm less than the total height of the enclosure. To be completed with plinth flanges, cable entry flanges and side panels. Compensation panels H=100mm are included in the supply. Maximum segregation Form 3a.

| Dimensions (mm) | | | Internal cable container* (mm) | | Package/ No. of pieces |
|---|---|---|---|---|---|
| H | W | D | W | Code | |
| 2000 | 600 | 600 | - | ES2066MFK | 1/1 |
| | | 800 | - | ES2086MFK | 1/1 |
| | | 800 | 200 | ES2086MF2K | 1/1 |
| | | 1000 | 200 | ES2006MF2K | 1/1 |
| | | 1000 | 400 | ES2006MF4K | 1/1 |
| | | 1200 | 400 | ES2026MF4K | 1/1 |
| | 800 | 600 | - | ES2068MFK | 1/1 |
| | | 800 | - | ES2088MFK | 1/1 |
| | | 800 | 200 | ES2088MF2K | 1/1 |
| | | 1000 | 200 | ES2008MF2K | 1/1 |
| | | 1000 | 400 | ES2008MF4K | 1/1 |
| | | 1200 | 400 | ES2028MF4K | 1/1 |
| | 1000 | 600 | - | ES2060MFK | 1/1 |
| | | 800 | - | ES2080MFK | 1/1 |
| | | 800 | 200 | ES2080MF2K | 1/1 |
| | | 1000 | 200 | ES2000MF2K | 1/1 |
| | | 1000 | 400 | ES2000MF4K | 1/1 |
| 2200 | 400 | 600 | - | ES2264MFK | 1/1 |
| | | 800 | - | ES2284MFK | 1/1 |
| | | 800 | 200 | ES2284MF2K | 1/1 |
| | | 1000 | 200 | ES2204MF2K | 1/1 |
| | | 1000 | 400 | ES2204MF4K | 1/1 |
| | | 1200 | 400 | ES2224MF4K | 1/1 |
| | 500 | 600 | - | ES2265MFK | 1/1 |
| | | 800 | - | ES2285MFK | 1/1 |
| | | 800 | 200 | ES2285MF2K | 1/1 |
| | | 1000 | 200 | ES2205MF2K | 1/1 |
| | | 1000 | 400 | ES2205MF4K | 1/1 |
| | | 1200 | 400 | ES2225MF4K | 1/1 |
| | 600 | 600 | - | ES2266MFK | 1/1 |
| | | 800 | - | ES2286MFK | 1/1 |
| | | 800 | 200 | ES2286MF2K | 1/1 |
| | | 1000 | 200 | ES2206MF2K | 1/1 |
| | | 1000 | 400 | ES2206MF4K | 1/1 |
| | | 1200 | 400 | ES2226MF4K | 1/1 |
| | 800 | 600 | - | ES2268MFK | 1/1 |
| | | 800 | - | ES2288MFK | 1/1 |
| | | 800 | 200 | ES2288MF2K | 1/1 |
| | | 1000 | 200 | ES2208MF2K | 1/1 |
| | | 1000 | 400 | ES2208MF4K | 1/1 |
| | | 1200 | 400 | ES2228MF4K | 1/1 |
| | 1000 | 600 | - | ES2260MFK | 1/1 |
| | | 800 | - | ES2280MFK | 1/1 |
| | | 800 | 200 | ES2281MF2K | 1/1 |
| | | 1000 | 200 | ES2200MF2K | 1/1 |
| | | 1000 | 400 | ES2200MF4K | 1/1 |

* Versions inclusive of pair of crosspieces mounted depth-wise and of intermediate upright for door closure.
The cable container can be mounted on the right or left side in the structure. Specify this at the time of ordering.
Examples of configuration and technical characteristics at page 2-120.

• Quick selection table 2–6 • In-depth technical information page 4–1 • Overall dimensions page 5–1

# IS2 Enclosures

## Ordering codes - Pre-assembled structures

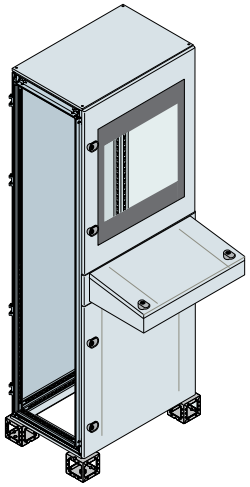

### Cabinets with console

Structure with removable roof, plinth H=100mm consisting of four angle pieces, complete with glazed or blind top door + blind bottom door, console, rear panel and box with key.
To be completed with plinth flanges, cable entry flanges and side panels.

| Dimensions (mm) | | | | Package/ No. of pieces |
|---|---|---|---|---|
| H | W | D | Code | |
| **Cabinet with glazed upper door with console** | | | | |
| 1800 | 600 | 400 | ES1864LK | 1/1 |
| | | 500 | ES1865LK | 1/1 |
| | | 600 | ES1866LK | 1/1 |
| | | 800 | ES1868LK | 1/1 |
| | 800 | 400 | ES1884LK | 1/1 |
| | | 500 | ES1885LK | 1/1 |
| | | 600 | ES1886LK | 1/1 |
| | | 800 | ES1888LK | 1/1 |
| **Cabinet with blind upper door with console** | | | | |
| 1800 | 600 | 400 | ES1864CK | 1/1 |
| | | 500 | ES1865CK | 1/1 |
| | | 600 | ES1866CK | 1/1 |
| | | 800 | ES1868CK | 1/1 |
| | 800 | 400 | ES1884CK | 1/1 |
| | | 500 | ES1885CK | 1/1 |
| | | 600 | ES1886CK | 1/1 |
| | | 800 | ES1888CK | 1/1 |
| **Cabinet with blind upper door with console** | | | | |
| 2000 | 600 | 400 | ES2064CK | 1/1 |
| | | 500 | ES2065CK | 1/1 |
| | | 600 | ES2066CK | 1/1 |
| | | 800 | ES2068CK | 1/1 |
| | 800 | 400 | ES2084CK | 1/1 |
| | | 500 | ES2085CK | 1/1 |
| | | 600 | ES2086CK | 1/1 |
| | | 800 | ES2088CK | 1/1 |

For glass dimension, please refer to the table at page 8-20.

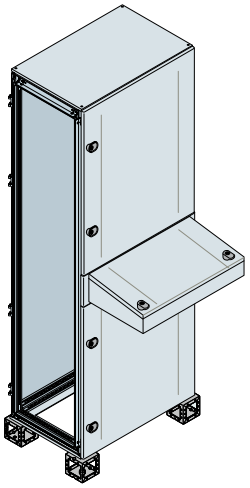

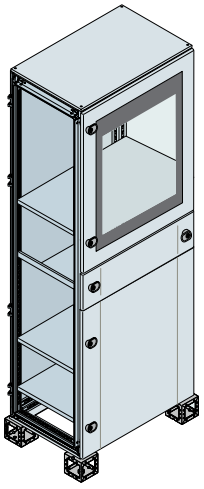

### PC cabinets

Structure with removable roof, plinth H=100mm consisting of four angle pieces, complete with glazed top door (able to hold monitors up to 17”) + blind bottom door, slide-out computer shelf and rear panel. Complete with 4 shelves for monitor, keyboard, printer and paper.
To be completed with plinth flanges, cable entry flanges and side panels

| Dimensions (mm) | | | | Package/ No. of pieces |
|---|---|---|---|---|
| H | W | D | Code | |
| 1800 | 600 | 600 | ES1866PCK | 1/1 |
| | | 800 | ES1868PCK | 1/1 |
| 2000 | 600 | 600 | ES2066PCK | 1/1 |
| | | 800 | ES2068PCK | 1/1 |

# IS2 Enclosures

## Ordering codes - Kit versions structures

W= 400 ÷ 1000mm

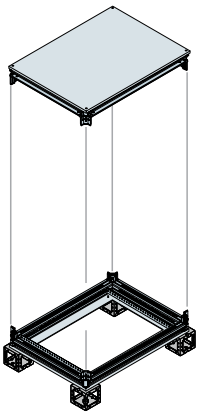

W= 1200mm

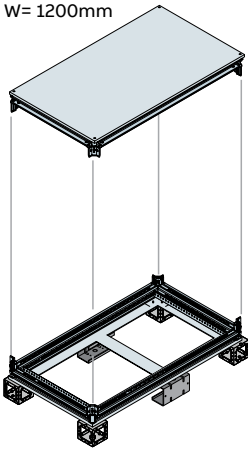

W= 300mm



### Base/Top

Base, top and plinth angle pieces H=100mm, to be completed with cable entry flanges and plinth flanges. The bases with 1200mm width include the intermediate plinth.
The bases W= 300mm are suitable for constructing side container for cable connection and include bottom closure flanges.

| Dimensions (mm) | | Code | Custom Made Service | Package/ No. of pieces |
|---|---|---|---|---|
| W | D | | | |
| **STRUCTURE - Base/Top** | | | | |
| 400 | 400 | EK4040KN | ✓ | 1/1 |
| | 500 | EK4050KN | ✓ | 1/1 |
| | 600 | EK4060KN | ✓ | 1/1 |
| | 800 | EK4080KN | ✓ | 1/1 |
| | 1000 | EK4010KN | ✓ | 1/1 |
| 600 | 300 | 1STQ005317B0000 | ✓ | 1/1 |
| | 400 | EK6040KN | ✓ | 1/1 |
| | 500 | EK6050KN | ✓ | 1/1 |
| | 600 | EK6060KN | ✓ | 1/1 |
| | 800 | EK6080KN | ✓ | 1/1 |
| | 1000 | EK6010KN | ✓ | 1/1 |
| 800 | 300 | 1STQ005318B0000 | ✓ | 1/1 |
| | 400 | EK8040KN | ✓ | 1/1 |
| | 500 | EK8050KN | ✓ | 1/1 |
| | 600 | EK8060KN | ✓ | 1/1 |
| | 800 | EK8080KN | ✓ | 1/1 |
| | 1000 | EK8010KN | ✓ | 1/1 |
| 1000 | 300 | 1STQ005319B0000 | ✓ | 1/1 |
| | 400 | EK1040KN | ✓ | 1/1 |
| | 500 | EK1050KN | ✓ | 1/1 |
| | 600 | EK1060KN | ✓ | 1/1 |
| | 800 | EK1080KN | ✓ | 1/1 |
| | 1000 | EK1010KN | ✓ | 1/1 |
| 1200 | 400 | EK1240KN | ✓ | 1/1 |
| | 500 | EK1250KN | ✓ | 1/1 |
| | 600 | EK1260KN | ✓ | 1/1 |
| | 800 | EK1280KN | ✓ | 1/1 |
| **EXTERNAL CABLE CONTAINER - Base/Top** | | | | |
| 300 | 400 | EK3040KN | ✓ | 1/1 |
| | 500 | EK3050KN | ✓ | 1/1 |
| | 600 | EK3060KN | ✓ | 1/1 |
| | 800 | EK3080KN | ✓ | 1/1 |

✓ The “Custom Made Service” is valid only for structures assembled at the factory, for more information please contact your local sales network.

• Quick selection table 2–6 • In-depth technical information page 4–1 • Overall dimensions page 5–1

# IS2 Enclosures

## Ordering codes - Kit versions structures

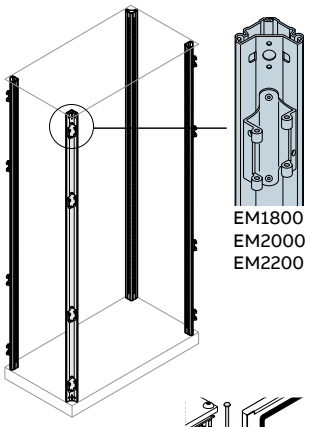


### Uprights for standard structures

Structure of the closed section type, drilled with 25mm pitch, galvanised, complete with No.4 multi-purpose hinges already mounted.

| Description | Dimensions (mm) H | Code | Package/ No. of pieces |
|---|---|---|---|
| Uprights with hinges | 1400 | EM1400 | 1/4 |
| Uprights with hinges | 1600 | EM1600 | 1/4 |
| Uprights with hinges | 1800 | EM1800 | 1/4 |
| Uprights with hinges | 2000 | EM2000 | 1/4 |
| Uprights with hinges | 2200 | EM2200 | 1/4 |

EV0118-EV0120
EV0122

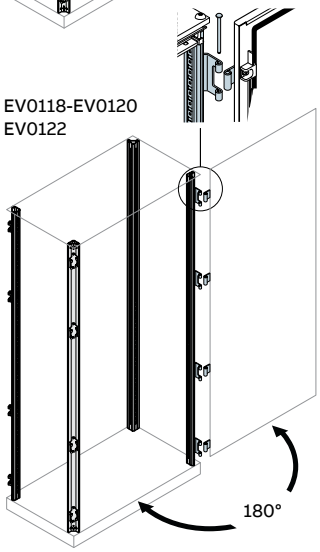


### Uprights for structure with hinges for 180° door opening

Mounted on standard base and top, these allow the door to be opened 180° (door to be drilled).

| Description | Dimensions (mm) H | Code | Package/ No. of pieces |
|---|---|---|---|
| Uprights + hinges opening 180° | 1800 | EV0118 | 1/4 |
| Uprights + hinges opening 180° | 2000 | EV0120 | 1/4 |
| Uprights + hinges opening 180° | 2200 | EV0122 | 1/4 |

EM1805-EM2005-EM2205

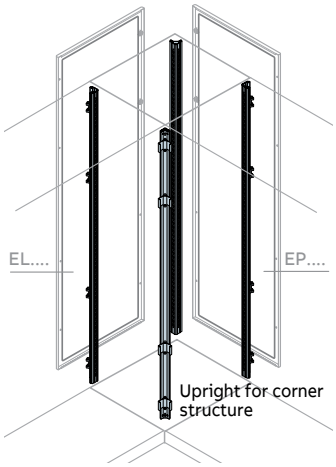


### Uprights for corner structures

Mounted on standard base and top, these allow batteries of corner enclosures to be built.

| Description | Dimensions (mm) H | Code | Package/ No. of pieces |
|---|---|---|---|
| Uprights for corner structure + standard uprights | 1800 | EV0118 | 1/4 |
| Uprights for corner structure + 3 standard uprights | 2000 | EV0120 | 1/4 |
| Uprights for corner structure + 3 standard uprights | 2200 | EV0122 | 1/4 |

For a composition of a corner structure please order: No.1 EK..0K (base/top); No.1 EM..05 (upright for corner structure + 3 standard uprights); No.1 EP.... (rear panel); No. 1 EL.... (side panel).

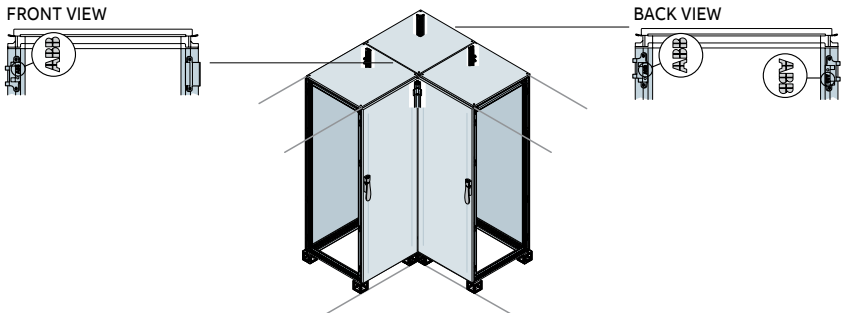


• Quick selection table 2–6 • In-depth technical information page 4–1 • Overall dimensions page 5–1

# IS2 Enclosures

## Ordering codes - Kit versions structures

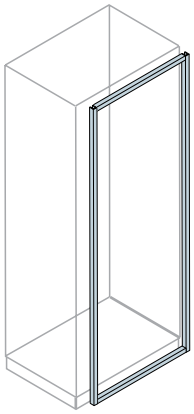

### Horizontal/Vertical IP31 profiles

IP31 closing profiles. In place of standard doors.

| Description | Dimensions (mm) H | Code | Package/ No. of pieces |
|---|---|---|---|
| **IP31 horizontal profile** | | | |
| N°2 IP31 closure horizontal profile | 400 | EP0400H | 1/1 |
| N°2 IP31 closure horizontal profile | 600 | EP0600H | 1/1 |
| N°2 IP31 closure horizontal profile | 800 | EP0800H | 1/1 |
| N°2 IP31 closure horizontal profile | 1000 | EP1000H | 1/1 |
| **IP31 vertical profile** | | | |
| N°2 IP31 closure vertical profile | 1800 | EP1800V | 1/1 |
| N°2 IP31 closure vertical profile | 2000 | EP2000V | 1/1 |
| N°2 IP31 closure vertical profile | 2200 | EP2200V | 1/1 |

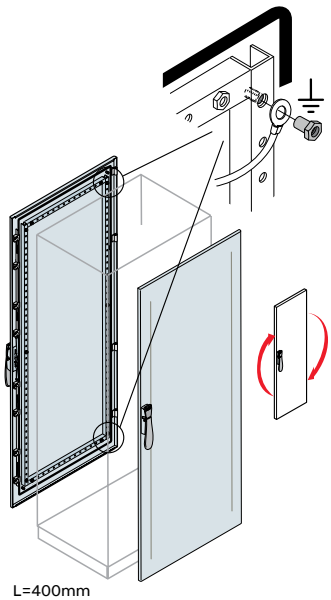

L=400mm

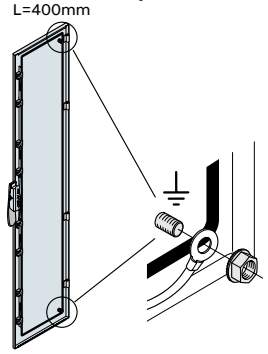

### IP65 blind front or rear doors

Door made of 2,00mm thick sheet, fitted with polyurethane gasket, complete with handle with double tongue keys (interchangeable with other types of inserts, see page 2-108). Reversible (standard hinging on the right), with 4 closure points and complete with internal reinforcement frame and earthing pins.

| Description | Dimensions (mm) H | W | Code | Custom Made Service | Package/ No. of pieces |
|---|---|---|---|---|---|
| Blind door | 1400 | 400 | EC1440K | | 1/1 |
| Blind door | | 600 | EC1460K | | 1/1 |
| Blind door | | 800 | EC1480K | | 1/1 |
| Blind door | | 1000 | 1STQ005321B0000 | | 1/1 |
| Blind door | 1600 | 400 | EC1640K | | 1/1 |
| Blind door | | 600 | EC1660K | | 1/1 |
| Blind door | | 800 | EC1680K | | 1/1 |
| Blind door | | 1000 | EC1610K | | 1/1 |
| Blind front/rear door external cable container | 1800 | 300 | EC1831K [1] | ✓ | 1/1 |
| Blind door | | 400 | EC1840K [1] | ✓ | 1/1 |
| Blind door | | 600 | EC1860K | ✓ | 1/1 |
| Blind door | | 800 | EC1880K | ✓ | 1/1 |
| Blind door | | 1000 | EC1810K | ✓ | 1/1 |
| Blind front/rear door external cable container | 2000 | 300 | EC2031K [1] | ✓ | 1/1 |
| Blind door | | 400 | EC2040K [1] | ✓ | 1/1 |
| Blind door | | 600 | EC2060K | ✓ | 1/1 |
| Blind door | | 800 | EC2080K | ✓ | 1/1 |
| Blind door | | 1000 | EC2012K | ✓ | 1/1 |
| Blind front/rear door external cable container | 2200 | 300 | EC2232K [1] | ✓ | 1/1 |
| Blind door | | 400 | EC2240K [1] | ✓ | 1/1 |
| Blind door | | 600 | EC2260K | ✓ | 1/1 |
| Blind door | | 800 | EC2280K | ✓ | 1/1 |
| Blind door | | 1000 | EC2210K | ✓ | 1/1 |

[1] The versions with W=300/400mm do not foresee the internal reinforcement frame.

✓ The "Custom Made Service" is valid only for structures assembled at the factory, for more information please contact your local sales network.

• Quick selection table 2–6 • In-depth technical information page 4–1 • Overall dimensions page 5–1

# IS2 Enclosures

## Ordering codes - Kit versions structures

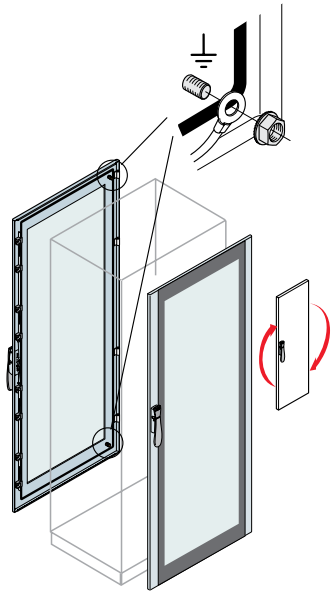

### IP65 glazed front or rear doors

Door made of 2,00 thick sheet with 4 mm thick safety glass, fitted with polyurethane gasket, complete with handle with double tongue key (interchangeable with other types of inserts, see page 2-108). Reversible (standard hinging on the right) with 4 closing points and complete with earthing pins.

| Description | Dimensions (mm) H | W | Code | Custom Made Service | Package/ No. of pieces |
|---|---|---|---|---|---|
| Glazed door | 1400 | 600 | 1STQ005328B0000 | | 1/1 |
| Glazed door | | 800 | 1STQ005329B0000 | | 1/1 |
| Glazed door | 1600 | 600 | 1STQ005330B0000 | | 1/1 |
| Glazed door | | 800 | 1STQ005331B0000 | | 1/1 |
| Glazed door | 1800 | 600 | ET1860K | ✓ | 1/1 |
| Glazed door | | 800 | ET1880K | ✓ | 1/1 |
| Glazed door | | 1000 | ET1810K | ✓ | 1/1 |
| Glazed door | 2000 | 600 | ET2060K | ✓ | 1/1 |
| Glazed door | | 800 | ET2080K | ✓ | 1/1 |
| Glazed door | | 1000 | ET2010K | ✓ | 1/1 |
| Glazed door | 2200 | 600 | ET2260K | ✓ | 1/1 |
| Glazed door | | 800 | ET2280K | ✓ | 1/1 |
| Glazed door | | 1000 | ET2211K | ✓ | 1/1 |

✓ The “Custom Made Service” is valid only for structures assembled at the factory, for more information please contact your local sales network.

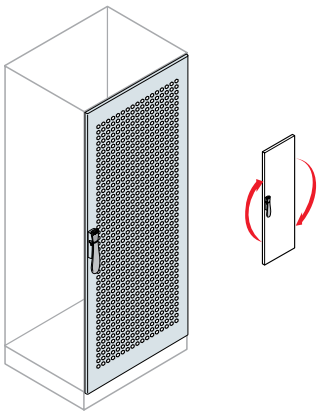

### Aerated door IP20

Aerated door made of 2,00 thick sheet, fitted with polyurethane gasket, complete with handle with double tongue key (interchangeable with other types of inserts, see pag. 2-108). Reversible, with 4 closing points and complete with internal reinforcement frame and earthing pins.

| Description | Dimensions (mm) H | W | Code | Custom Made Service | Package/ No. of pieces |
|---|---|---|---|---|---|
| Aerated door for server cabinet | 1800 | 800 | EC1882 | ✓ | 1/1 |
| Aerated door for server cabinet | 2000 | | EC2082 | ✓ | 1/1 |
| Aerated door for server cabinet | 2200 | | EC2282 | ✓ | 1/1 |
| Aerated door for server cabinet with 180° opening | 1800 | 800 | EC1884 | ✓ | 1/1 |
| Aerated door for server cabinet with 180° opening | 2000 | | EC2084 | ✓ | 1/1 |
| Aerated door for server cabinet with 180° opening | 2200 | | EC2284 | ✓ | 1/1 |

✓ The “Custom Made Service” is valid only for structures assembled at the factory, for more information please contact your local sales network.

• Quick selection table 2–6 • In-depth technical information page 4–1 • Overall dimensions page 5–1

# IS2 Enclosures

## Ordering codes - Kit versions structures

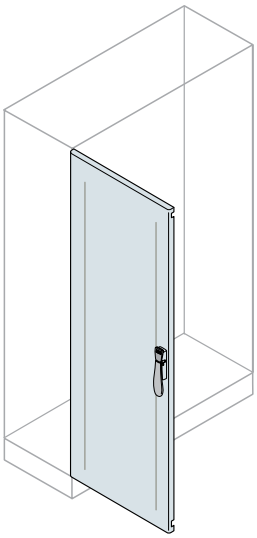

**Door with special profile for making cabinets with double doors**
The selection of the double door structure in the IS2 enclosures (kit version) can be realised in two different ways:

- without intermediate upright, using one door with a special profile and one door with overlapping closure.
- with intermediate upright, using two doors with special profile closing on intermediate upright.

| Description | Dimensions (mm) H | W | Code | Custom Made Service | Package/ No. of pieces |
|---|---|---|---|---|---|
| Blind door for cable container | 1800 | 200 | EC1880VC2K (1) | | 1/1 |
| Blind door for cable container | 2000 | | EC2080VC2K (1) | | 1/1 |
| Blind door for cable container | 2200 | | EC2280VC2K (1) | | 1/1 |
| Blind door for cable container | 1800 | 400 | EC1880VC4K (1) | ✓ | 1/1 |
| Blind door for cable container | 2000 | | EC2080VC4K (1) | ✓ | 1/1 |
| Blind door for cable container | 2200 | | EC2280VC4K (1) | ✓ | 1/1 |
| Blind door | 1800 | 500 | EC1880FC5K (1) | ✓ | 1/1 |
| Blind door | 2000 | | EC2080FC5K (1) | ✓ | 1/1 |
| Blind door | 2200 | | EC2280FC5K (1) | ✓ | 1/1 |
| Blind door | 1400 | 600 | EC1480FC6K | | 1/1 |
| Blind door | 1600 | | EC1680FC6K | | 1/1 |
| Blind door | 1800 | | EC1880FC6K | ✓ | 1/1 |
| Blind door | 2000 | | EC2080FC6K | ✓ | 1/1 |
| Blind door | 2200 | | EC2280FC6K | ✓ | 1/1 |
| Blind door | 1800 | 800 | EC1880FC8K | ✓ | 1/1 |
| Blind door | 2000 | | EC2080FC8K | ✓ | 1/1 |
| Blind door | 2200 | | EC2280FC8K | ✓ | 1/1 |
| Glazed door | 1800 | 600 | EC1880FV6K | ✓ | 1/1 |
| Glazed door | 2000 | | EC2080FV6K | ✓ | 1/1 |
| Glazed door | 2200 | | EC2280FV6K | ✓ | 1/1 |
| Glazed door | 1800 | 800 | EC1880FV8K | ✓ | 1/1 |
| Glazed door | 2000 | | EC2080FV8K | ✓ | 1/1 |
| Glazed door | 2200 | | EC2280FV8K | ✓ | 1/1 |

(1) The versions with W=200/300/400/500mm do not foresee the internal reinforcement frame.

✓ The "Custom Made Service" is valid only for structures assembled at the factory, for more information please contact your local sales network.

## Example of double door enclosures

### Doors with overlapping closure

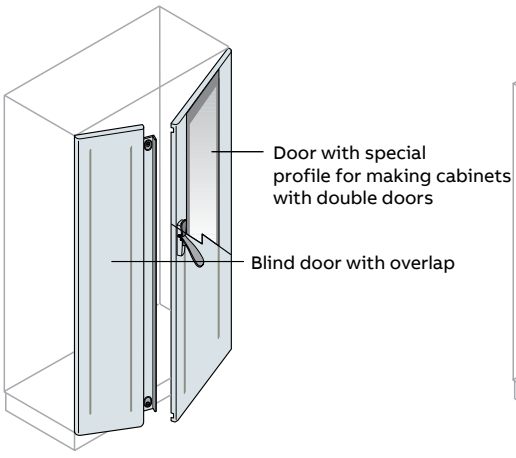


### Doors closing on intermediate upright

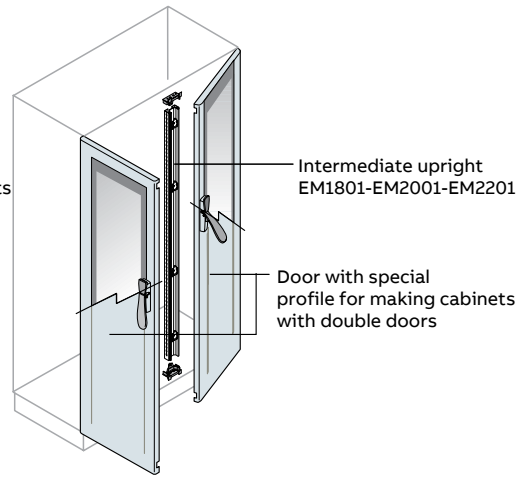


• Quick selection table 2–6 • In-depth technical information page 4–1 • Overall dimensions page 5–1

# IS2 Enclosures

## Ordering codes - Kit versions structures

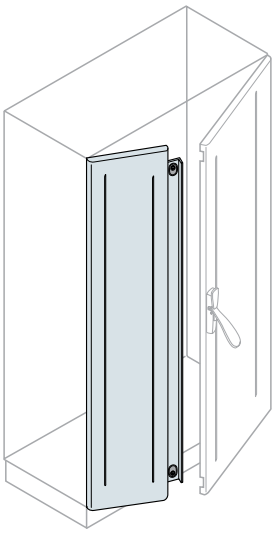

### Blind door with overlap

Blind door with overlap side by side with other blind or glazed door without overlap. Allows the enclosure with double door to be made without the use of the upright.

| Description | Dimensions (mm) H | W | Code | Custom Made Service | Package/ No. of pieces |
|---|---|---|---|---|---|
| **Blind door with overlap for double door version/ replacement rear panel with door** | | | | | |
| Blind door with overlap | 1400 | 600 | ED1412SK | | 1/1 |
| Blind door with overlap | 1600 | 600 | ED1612SK | | 1/1 |
| Blind door with overlap | 1800 | 200 | ED1802SK (1) | | 1/1 |
| Blind door with overlap | | 400 | ED1804SK (1) | ED1808DPKM | 1/1 |
| Blind door with overlap | | 500 | ED1810SK (1) | ED1810DPKM | 1/1 |
| Blind door with overlap | | 600 | ED1812SK | ED1812DPKM | 1/1 |
| Blind door with overlap | | 800 | ED1816SK | ED1816DPKM | 1/1 |
| Blind door with overlap | 2000 | 200 | ED2002SK (1) | | 1/1 |
| Blind door with overlap | | 400 | ED2004SK (1) | ED2008DPKM | 1/1 |
| Blind door with overlap | | 500 | ED2010SK (1) | ED2010DPKM | 1/1 |
| Blind door with overlap | | 600 | ED2012SK | ED2012DPKM | 1/1 |
| Blind door with overlap | | 800 | ED2016SK | ED2016DPKM | 1/1 |
| Blind door with overlap | 2200 | 200 | ED2202SK (1) | | 1/1 |
| Blind door with overlap | | 400 | ED2204SK (1) | ED2208DPKM | 1/1 |
| Blind door with overlap | | 500 | ED2210SK (1) | ED2210DPKM | 1/1 |
| Blind door with overlap | | 600 | ED2212SK | ED2212DPKM | 1/1 |
| Blind door with overlap | | 800 | ED2216SK | ED2216DPKM | 1/1 |

(1) The versions with W=200/400/500mm do not foresee the internal reinforcement frame.

The “Custom Made Service” is valid only for structures assembled at the factory, for more information please contact your local sales network.

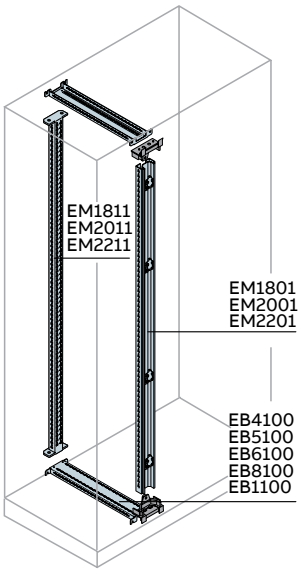


### Intermediate uprights for cable container or double door

These allow the structure to be divided into two parts.

| Description | Dimensions (mm) H | Code | Package/ No. of pieces |
|---|---|---|---|
| Intermediate upright for structure | 1800 | EM1801 | 1/1 |
| Intermediate upright for structure | 2000 | EM2001 | 1/1 |
| Intermediate upright for structure | 2200 | EM2201 | 1/1 |
| Intermediate rear upright for cable container | 1800 | EM1811 (1) | 1/1 |
| Intermediate rear upright for cable container | 2000 | EM2011 (1) | 1/1 |
| Intermediate rear upright for cable container | 2200 | EM2211 (1) | 1/1 |

(1) To be fixed directy on the structure.

### To be fixed directy on the structure.

| Description | Dimensions (mm) D | Code | Package/ No. of pieces |
|---|---|---|---|
| Pair of crosspieces for base | 400 | EB4100 | 1/2 |
| Pair of crosspieces for base | 500 | EB5100 | 1/2 |
| Pair of crosspieces for base | 600 | EB6100 | 1/2 |
| Pair of crosspieces for base | 800 | EB8100 | 1/2 |
| Pair of crosspieces for base | 1000 | EB1100 | 1/2 |

• Quick selection table 2–6 • In-depth technical information page 4–1 • Overall dimensions page 5–1

# IS2 Enclosures

## Ordering codes - Kit versions structures

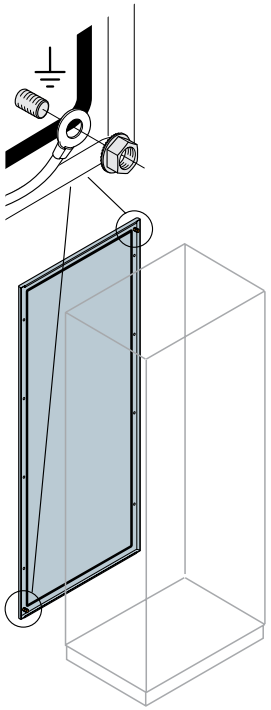

**IP65 Rear panels**

Panel made of 1,5mm thick sheet, fitted with polyurethane basket, complete with earthing pins. Can be replaced with front/rear doors.

| Description | Dimensions (mm) H | W | Code | Custom Made Service | Package/ No. of pieces |
|---|---|---|---|---|---|
| Rear panel external cable container | 1800 | 300 | EP1830K | | 1/1 |
| Rear panel external cable container | 2000 | | EP2030K | | 1/1 |
| Rear panel external cable container | 2200 | | EP2231K | | 1/1 |
| Rear panel | 1400 | 400 | EP1440K | | 1/1 |
| Rear panel | | 600 | EP1460K | | 1/1 |
| Rear panel | | 800 | EP1480K | | 1/1 |
| Rear panel | | 1000 | 1STQ005320B0000 | | 1/1 |
| Rear panel | | 1200 | EP1412K | | 1/1 |
| Rear panel | 1600 | 400 | EP1640K | ✓ | 1/1 |
| Rear panel | | 600 | EP1660K | ✓ | 1/1 |
| Rear panel | | 800 | EP1680K | ✓ | 1/1 |
| Rear panel | | 1000 | EP1610K | ✓ | 1/1 |
| Rear panel | | 1200 | EP1612K | ✓ | 1/1 |
| Rear panel | 1800 | 300 | EP1830K | ✓ | 1/1 |
| Rear panel | | 400 | EP1840K | ✓ | 1/1 |
| Rear panel | | 600 | EP1860K | ✓ | 1/1 |
| Rear panel | | 800 | EP1880K | ✓ | 1/1 |
| Rear panel | | 1000 | EP1811K | ✓ | 1/1 |
| Rear panel | | 1200 | EP1812K | ✓ | 1/1 |
| Rear panel | 2000 | 300 | EP2030K | ✓ | 1/1 |
| Rear panel | | 400 | EP2041K | ✓ | 1/1 |
| Rear panel | | 600 | EP2060K | ✓ | 1/1 |
| Rear panel | | 800 | EP2080K | ✓ | 1/1 |
| Rear panel | | 1000 | EP2010K | ✓ | 1/1 |
| Rear panel | | 1200 | EP2012K | ✓ | 1/1 |
| Rear panel | 2200 | 300 | EP2231K | ✓ | 1/1 |
| Rear panel | | 400 | EP2240K | ✓ | 1/1 |
| Rear panel | | 600 | EP2260K | ✓ | 1/1 |
| Rear panel | | 800 | EP2280K | ✓ | 1/1 |
| Rear panel | | 1000 | EP2210K | ✓ | 1/1 |
| Rear panel | | 1200 | EP2212K | ✓ | 1/1 |

✓ The “Custom Made Service” is valid only for structures assembled at the factory, for more information please contact your local sales network.

• Quick selection table 2–6 • In-depth technical information page 4–1 • Overall dimensions page 5–1

# IS2 Enclosures

## Ordering codes - Kit versions structures

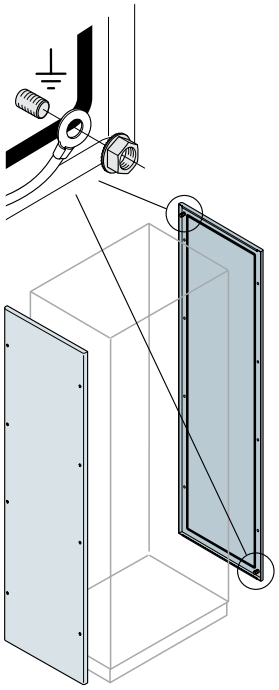

**IP65 Side blind panels**

Panel made of 1,5mm thick sheet, fitted with polyurethane gasket, complete with earthing pins. Replaceable with side doors.

| Description | Dimensions (mm) H | W | Code | Custom Made Service | Package/ No. of pieces |
|---|---|---|---|---|---|
| No. 1 Blind side panel | 1800 | 400 | EL1841K | | 1/1 |
| No. 1 Blind side panel | | 500 | EL1851K | | 1/1 |
| No. 1 Blind side panel | | 600 | EL1861K | | 1/1 |
| No. 1 Blind side panel | | 800 | EL1881K | | 1/1 |
| No. 1 Blind side panel | | 1000 | EL1811K | | 1/1 |
| No. 1 Blind side panel | 2000 | 400 | EL2041K | | 1/1 |
| No. 1 Blind side panel | | 500 | EL2051K | | 1/1 |
| No. 1 Blind side panel | | 600 | EL2061K | | 1/1 |
| No. 1 Blind side panel | | 800 | EL2081K | | 1/1 |
| No. 1 Blind side panel | | 1000 | EL2011K | | 1/1 |
| No. 1 Blind side panel | 2200 | 400 | EL2241K | | 1/1 |
| No. 1 Blind side panel | | 500 | EL2251K | | 1/1 |
| No. 1 Blind side panel | | 600 | EL2261K | | 1/1 |
| No. 1 Blind side panel | | 800 | EL2281K | | 1/1 |
| No. 1 Blind side panel | | 1000 | EL2211K | | 1/1 |
| No. 2 Blind side panels | 1400 | 300 | 1STQ005322B0000 | | 1/2 |
| No. 2 Blind side panels | | 400 | EL1440K | | 1/2 |
| No. 2 Blind side panels | | 500 | 1STQ005323B0000 | | 1/2 |
| No. 2 Blind side panels | | 600 | EL1460K | | 1/2 |
| No. 2 Blind side panels | | 800 | EL1480K | | 1/2 |
| No. 2 Blind side panels | 1600 | 300 | 1STQ005324B0000 | | 1/2 |
| No. 2 Blind side panels | | 400 | 1STQ005325B0000 | | 1/2 |
| No. 2 Blind side panels | | 500 | EL1650K | | 1/2 |
| No. 2 Blind side panels | | 600 | EL1660K | | 1/2 |
| No. 2 Blind side panels | | 800 | EL1680K | | 1/2 |
| No. 2 Blind side panels | | 1000 | EL1610K | | 1/2 |
| No. 2 Blind side panels | 1800 | 400 | EL1840K | ✓ | 1/2 |
| No. 2 Blind side panels | | 500 | EL1850K | ✓ | 1/2 |
| No. 2 Blind side panels | | 600 | EL1860K | ✓ | 1/2 |
| No. 2 Blind side panels | | 800 | EL1880K | ✓ | 1/2 |
| No. 2 Blind side panels | | 1000 | EL1810K | ✓ | 1/2 |
| No. 2 Blind side panels | 2000 | 400 | EL2040K | ✓ | 1/2 |
| No. 2 Blind side panels | | 500 | EL2050K | ✓ | 1/2 |
| No. 2 Blind side panels | | 600 | EL2060K | ✓ | 1/2 |
| No. 2 Blind side panels | | 800 | EL2080K | ✓ | 1/2 |
| No. 2 Blind side panels | | 1000 | EL2012K | ✓ | 1/2 |
| No. 2 Blind side panels | 2200 | 400 | EL2240K | ✓ | 1/2 |
| No. 2 Blind side panels | | 500 | EL2250K | ✓ | 1/2 |
| No. 2 Blind side panels | | 600 | EL2260K | ✓ | 1/2 |
| No. 2 Blind side panels | | 800 | EL2280K | ✓ | 1/2 |
| No. 2 Blind side panels | | 1000 | EL2210K | ✓ | 1/2 |

✓ The “Custom Made Service” is valid only for structures assembled at the factory, for more information please contact your local sales network.

• Quick selection table 2–6 • In-depth technical information page 4–1 • Overall dimensions page 5–1

# IS2 Enclosures

## Ordering codes - Completion of structures

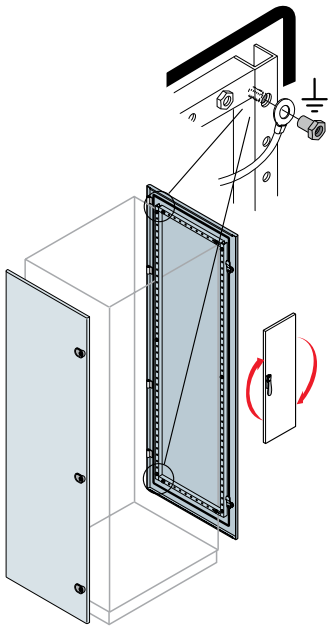

L=400mm

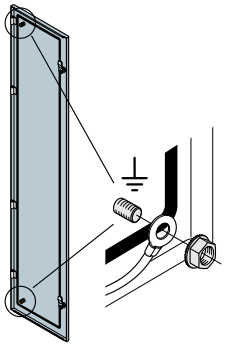

**IP65 blind side doors**

Reversible 1,5mm thick sheet door, fitted with polyurethane gasket, complete with n 2 box with key-with double tongue (interchangeable with other types of inserts, see page 2-108) complete with internal reinforcement frame

| Description | Dimensions (mm) H | D | Code | Custom Made Service | Package/ No. of pieces |
|---|---|---|---|---|---|
| Blind side door | 1800 | 400 | EC1841K | ✓ | 1/1 |
| Blind side door | | 500 | EC1851K | ✓ | 1/1 |
| Blind side door | | 600 | EC1861K | ✓ | 1/1 |
| Blind side door | | 800 | EC1881K | ✓ | 1/1 |
| Blind side door | | 1000 | EC1811K | ✓ | 1/1 |
| Blind side door | 2000 | 400 | EC2041K | ✓ | 1/1 |
| Blind side door | | 500 | EC2051K | ✓ | 1/1 |
| Blind side door | | 600 | EC2061K | ✓ | 1/1 |
| Blind side door | | 800 | EC2081K | ✓ | 1/1 |
| Blind side door | | 1000 | EC2011K | ✓ | 1/1 |
| Blind side door | 2200 | 400 | EC2241K | ✓ | 1/1 |
| Blind side door | | 500 | EC2251K | ✓ | 1/1 |
| Blind side door | | 600 | EC2261K | ✓ | 1/1 |
| Blind side door | | 800 | EC2281K | ✓ | 1/1 |
| Blind side door | | 1000 | EC2211K | ✓ | 1/1 |

✓ The “Custom Made Service” is valid only for structures assembled at the factory, for more information please contact your local sales network.

• Quick selection table 2–6 • In-depth technical information page 4–1 • Overall dimensions page 5–1

# IS2 Enclosures

## Ordering codes - Completion of structures

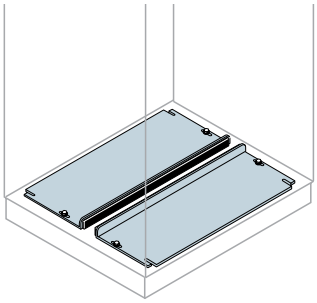

**Sliding cable entry flanges IP40**
The thickness for the sliding flanges is 2,0 mm.

| Description | Dimensions (mm) W | D | Code | Custom Made Service | Package/ No. of pieces |
|---|---|---|---|---|---|
| Sliding cable entry flanges IP40 | 400 | 400 | EF4040 | ✓ | 1/1 |
| Sliding cable entry flanges IP40 | 600 | | EF6040 | ✓ | 1/1 |
| Sliding cable entry flanges IP40 | 800 | | EF8040 | ✓ | 1/1 |
| Sliding cable entry flanges IP40 | 1000 | | EF1040 | ✓ | 1/1 |
| Sliding cable entry flanges IP40 | 1200 | | 2xEF6040 | ✓ | 1/1 |
| Sliding cable entry flanges IP40 | 1600 | | 2xEF8040 | ✓ | 1/1 |
| Sliding cable entry flanges IP40 | 400 | 500 | EF4050 | ✓ | 1/1 |
| Sliding cable entry flanges IP40 | 600 | | EF6050 | ✓ | 1/1 |
| Sliding cable entry flanges IP40 | 800 | | EF8050 | ✓ | 1/1 |
| Sliding cable entry flanges IP40 | 1000 | | EF1053 | ✓ | 1/1 |
| Sliding cable entry flanges IP40 | 1200 | | 2xEF6050 | ✓ | 1/1 |
| Sliding cable entry flanges IP40 | 1600 | | 2xEF8050 | ✓ | 1/1 |
| Sliding cable entry flanges IP40 | 400 | 600 | EF4060 | ✓ | 1/1 |
| Sliding cable entry flanges IP40 | 600 | | EF6060 | ✓ | 1/1 |
| Sliding cable entry flanges IP40 | 800 | | EF8060 | ✓ | 1/1 |
| Sliding cable entry flanges IP40 | 1000 | | EF1060 | ✓ | 1/1 |
| Sliding cable entry flanges IP40 | 1200 | | 2xEF6060 | ✓ | 1/1 |
| Sliding cable entry flanges IP40 | 1600 | | 2xEF8060 | ✓ | 1/1 |
| Sliding cable entry flanges IP40 | 400 | 800 | EF4080 | ✓ | 1/1 |
| Sliding cable entry flanges IP40 | 600 | | EF6080 | ✓ | 1/1 |
| Sliding cable entry flanges IP40 | 800 | | EF8080 | ✓ | 1/1 |
| Sliding cable entry flanges IP40 | 1000 | | EF1080 | ✓ | 1/1 |
| Sliding cable entry flanges IP40 | 1200 | | 2xEF6080 | ✓ | 1/1 |
| Sliding cable entry flanges IP40 | 1600 | | 2xEF8080 | ✓ | 1/1 |
| Sliding cable entry flanges IP40 | 400 | 1000 | EF4010 | ✓ | 1/1 |
| Sliding cable entry flanges IP40 | 600 | | EF6010 | ✓ | 1/1 |
| Sliding cable entry flanges IP40 | 800 | | EF8010 | ✓ | 1/1 |
| Sliding cable entry flanges IP40 | 1000 | | EF1010 | ✓ | 1/1 |
| Sliding cable entry flanges IP40 | 1200 | | 2xEF6010 | ✓ | 1/1 |
| Sliding cable entry flanges IP40 | 1600 | | 2xEF8010 | ✓ | 1/1 |

✓ The “Custom Made Service” is valid only for structures assembled at the factory, for more information please contact your local sales network.

• Quick selection table 2–6 • In-depth technical information page 4–1 • Overall dimensions page 5–1

# IS2 Enclosures

## Ordering codes - Completion of structures

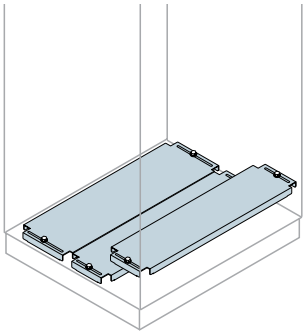

**Built-up cable entry flanges IP40**

The thickness for the built-up flanges is 1,5mm.

| Description | Dimensions (mm) W | D | Code | Custom Made Service | Package/ No. of pieces |
|---|---|---|---|---|---|
| Built-up cable entry flanges IP40 | 400 | 400 | EF4041 | ✓ | 1/1 |
| Built-up cable entry flanges IP40 | 600 | | EF6041 | ✓ | 1/1 |
| Built-up cable entry flanges IP40 | 800 | | EF8041 | ✓ | 1/1 |
| Built-up cable entry flanges IP40 | 1000 | | EF1041 | ✓ | 1/1 |
| Built-up cable entry flanges IP40 | 1200 | | 2xEF6041 | ✓ | 1/1 |
| Built-up cable entry flanges IP40 | 1600 | | 2xEF8041 | ✓ | 1/1 |
| Built-up cable entry flanges IP40 | 400 | 500 | EF4051 | ✓ | 1/1 |
| Built-up cable entry flanges IP40 | 600 | | EF6051 | ✓ | 1/1 |
| Built-up cable entry flanges IP40 | 800 | | EF8051 | ✓ | 1/1 |
| Built-up cable entry flanges IP40 | 1000 | | EF1051 | ✓ | 1/1 |
| Built-up cable entry flanges IP40 | 1200 | | 2xEF6051 | ✓ | 1/1 |
| Built-up cable entry flanges IP40 | 1600 | | 2xEF8051 | ✓ | 1/1 |
| Built-up cable entry flanges IP40 | 400 | 600 | EF4061 | ✓ | 1/1 |
| Built-up cable entry flanges IP40 | 600 | | EF6061 | ✓ | 1/1 |
| Built-up cable entry flanges IP40 | 800 | | EF8061 | ✓ | 1/1 |
| Built-up cable entry flanges IP40 | 1000 | | EF1061 | ✓ | 1/1 |
| Built-up cable entry flanges IP40 | 1200 | | 2xEF6061 | ✓ | 1/1 |
| Built-up cable entry flanges IP40 | 1600 | | 2xEF8061 | ✓ | 1/1 |
| Built-up cable entry flanges IP40 | 400 | 800 | EF4081 | ✓ | 1/1 |
| Built-up cable entry flanges IP40 | 600 | | EF6081 | ✓ | 1/1 |
| Built-up cable entry flanges IP40 | 800 | | EF8081 | ✓ | 1/1 |
| Built-up cable entry flanges IP40 | 1000 | | EF1081 | ✓ | 1/1 |
| Built-up cable entry flanges IP40 | 1200 | | 2xEF6081 | ✓ | 1/1 |
| Built-up cable entry flanges IP40 | 1600 | | 2xEF8081 | ✓ | 1/1 |
| Built-up cable entry flanges IP40 | 400 | 1000 | EF4011 | ✓ | 1/1 |
| Built-up cable entry flanges IP40 | 600 | | EF6011 | ✓ | 1/1 |
| Built-up cable entry flanges IP40 | 800 | | EF8011 | ✓ | 1/1 |
| Built-up cable entry flanges IP40 | 1000 | | EF1011 | ✓ | 1/1 |
| Built-up cable entry flanges IP40 | 1200 | | 2xEF6011 | ✓ | 1/1 |
| Built-up cable entry flanges IP40 | 1600 | | 2xEF8011 | ✓ | 1/1 |

✓ The “Custom Made Service” is valid only for structures assembled at the factory, for more information please contact your local sales network.

• Quick selection table 2–6 • In-depth technical information page 4–1 • Overall dimensions page 5–1

# IS2 Enclosures

## Ordering codes - Completion of structures

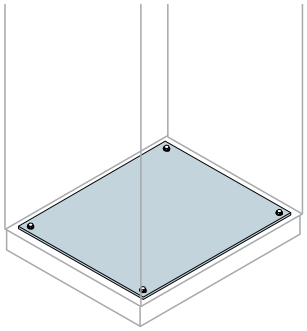

**Fixed cable entry flanges IP65**

The thickness for the fixed cable entry flanges is 2,0 mm.

| Description | Dimensions (mm) W | D | Code | Custom Made Service | Package/ No. of pieces |
|---|---|---|---|---|---|
| Fixed cable entry flanges IP65 | 600 | | 1STQ005426B0000 | | 1/1 |
| Fixed cable entry flanges IP65 | 800 | | 1STQ005427B0000 | | 1/1 |
| Fixed cable entry flanges IP65 | 1000 | | 1STQ005428B0000 | | 1/1 |
| Fixed cable entry flanges IP65 | 400 | | EF4042 | ✓ | 1/1 |
| Fixed cable entry flanges IP65 | 600 | | EF6043 | ✓ | 1/1 |
| Fixed cable entry flanges IP65 | 800 | | EF8042 | ✓ | 1/1 |
| Fixed cable entry flanges IP65 | 1000 | | EF1042 | ✓ | 1/1 |
| Fixed cable entry flanges IP65 | 1200 | | 2xEF6043 | ✓ | 1/1 |
| Fixed cable entry flanges IP65 | 1600 | | 2xEF8042 | ✓ | 1/1 |
| Fixed cable entry flanges IP65 | 400 | | EF4052 | ✓ | 1/1 |
| Fixed cable entry flanges IP65 | 600 | | EF6052 | ✓ | 1/1 |
| Fixed cable entry flanges IP65 | 800 | | EF8052 | ✓ | 1/1 |
| Fixed cable entry flanges IP65 | 1000 | | EF1052 | ✓ | 1/1 |
| Fixed cable entry flanges IP65 | 1200 | | 2xEF6052 | ✓ | 1/1 |
| Fixed cable entry flanges IP65 | 1600 | | 2xEF8052 | ✓ | 1/1 |
| Fixed cable entry flanges IP65 | 400 | | EF4063 | ✓ | 1/1 |
| Fixed cable entry flanges IP65 | 600 | | EF6062 | ✓ | 1/1 |
| Fixed cable entry flanges IP65 | 800 | | EF8062 | ✓ | 1/1 |
| Fixed cable entry flanges IP65 | 1000 | | EF1062 | ✓ | 1/1 |
| Fixed cable entry flanges IP65 | 1200 | | 2xEF6062 | ✓ | 1/1 |
| Fixed cable entry flanges IP65 | 1600 | | 2xEF8062 | ✓ | 1/1 |
| Fixed cable entry flanges IP65 | 400 | | EF4082 | ✓ | 1/1 |
| Fixed cable entry flanges IP65 | 600 | | EF6082 | ✓ | 1/1 |
| Fixed cable entry flanges IP65 | 800 | | EF8082 | ✓ | 1/1 |
| Fixed cable entry flanges IP65 | 1000 | | EF1082 | ✓ | 1/1 |
| Fixed cable entry flanges IP65 | 1200 | | 2xEF6082 | ✓ | 1/1 |
| Fixed cable entry flanges IP65 | 1600 | | 2xEF8082 | ✓ | 1/1 |
| Fixed cable entry flanges IP65 | 400 | | EF4012 | ✓ | 1/1 |
| Fixed cable entry flanges IP65 | 600 | | EF6012 | ✓ | 1/1 |
| Fixed cable entry flanges IP65 | 800 | | EF8012 | ✓ | 1/1 |
| Fixed cable entry flanges IP65 | 1000 | | EF1012 | ✓ | 1/1 |
| Fixed cable entry flanges IP65 | 1200 | | 2xEF6012 | ✓ | 1/1 |
| Fixed cable entry flanges IP65 | 1600 | | 2xEF8012 | ✓ | 1/1 |

✓ The “Custom Made Service” is valid only for structures assembled at the factory, for more information please contact your local sales network.

# IS2 Enclosures

## Ordering codes - Completion of structures

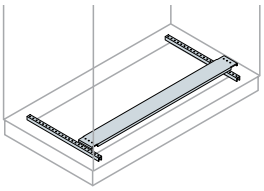

EV0132-EV0133-EV0134
EV0135-EV0136-EV0137

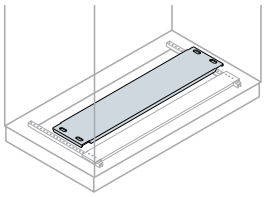

EF2610-EF2810-EF2620-EF2820

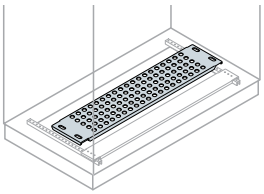

EF3610-EF3810

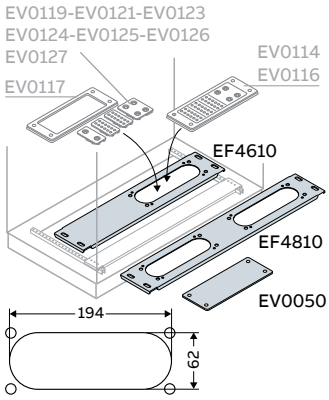


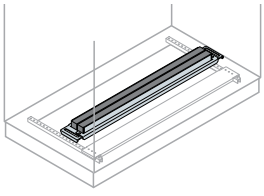

EF6610-EF6810

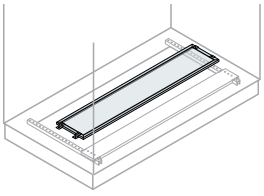

EF9620-EF9820

### Modular base plates

Using the modular plates it is possible change the configuration of the base of the enclosure, favoring a high level of customization.
Differents solutions are available:

- single blind plate
- single aerated plate
- single plate with plastic cable entry flange
- single plate with gasket for cable entry

To complete the IS2 base with single modular plates it is necessary order the fixing profiles, that are made up of two profile and a compensation blind plate.

| Description | Dimensions (mm) W | D | Code | Package/ No. of pieces |
|---|---|---|---|---|
| **Kit for mounting single modular plate** | | | | |
| Kit for fixing bottom plate | 600 | 600 | EV0132 | 1/1 |
| Kit for fixing bottom plate | | 800 | EV0133 | 1/1 |
| Kit for fixing bottom plate | | 1000 | EV0134 | 1/1 |
| Kit for fixing bottom plate | 800 | 600 | EV0135 | 1/1 |
| Kit for fixing bottom plate | | 800 | EV0136 | 1/1 |
| Kit for fixing bottom plate | | 1000 | EV0137 | 1/1 |
| **Single blind bottom plate** | | | | |
| Single blind bottom plate | 600 | 100 | EF2610 | 1/1 |
| Single blind bottom plate | 800 | | EF2810 | 1/1 |
| Single blind bottom plate | 600 | 200 | EF2620 | 1/1 |
| Single blind bottom plate | 800 | | EF2820 | 1/1 |
| **Single aerated bottom plate** | | | | |
| Single aerated bottom plate | 600 | 100 | EF3610 | 1/1 |
| Single aerated bottom plate | 800 | | EF3810 | 1/1 |
| **Single bottom plate for cable entry flange** | | | | |
| Single plate 1 cable entry flange | 600 | 100 | EF4610 | 1/1 |
| Single plate 2 cable entry flanges | 800 | | EF4810 | 1/1 |
| No.1 closure plate | | | EV0050 | 1/1 |
| **Single bottom plate with gasket** | | | | |
| Single bottom plate with gasket | 600 | 100 | EF6610 | 1/1 |
| Single bottom plate with gasket | 800 | | EF6810 | 1/1 |
| **Single filter bottom plate** | | | | |
| Single filter bottom plate | 600 | 200 | EF9620 | 1/1 |
| Single filter bottom plate | 800 | | EF9820 | 1/1 |

### Useful space in the base of enclosure

Example: base 600x600mm (LxP): order No.1 kit for mounting single modular plate EV0132 + No.1 EF2610 + No.1 EF4610.

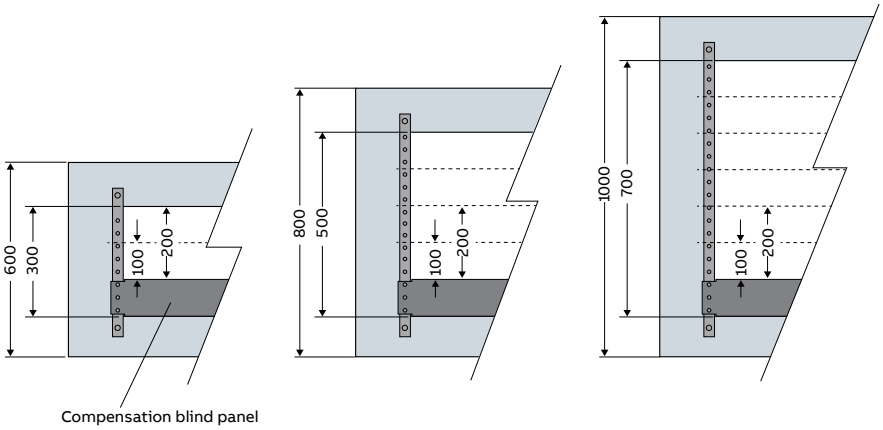


• Quick selection table 2–6 • In-depth technical information page 4–1 • Overall dimensions page 5–1

# IS2 Enclosures

## Ordering codes - Completion of structures

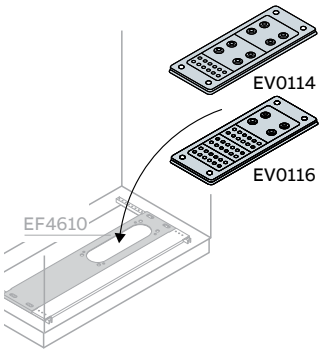


**Modular preconfigurated cable entry flange IP65**

The cable glands allow to install several cables and ensure the protection of the components within the enclosures.
The inserts are equipped with a membrane that can be easily perforated by the cable.
There is the possibility of installing cable glands and flange with clamp.
Colour gray RAL 7035, operating temperature from -20 ° C to +125 ° C, IP65 according to EN 60529 specifications.

| Description | Dimensions (mm) W | D | Code | Package/ No. of pieces |
|---|---|---|---|---|
| No.10 preconfigurated cable entry flanges for 28 cables Ø min/max 7/14 and 10 cables Ø min/max 4/10mm | 214 | 90 | EV0114 | 1/10 |
| No.10 preconfigurated cable entry flanges for 28 cables Ø min/max 7/14 and 10 cables Ø min/max 4/10mm | 214 | 90 | EV0116 | 1/10 |

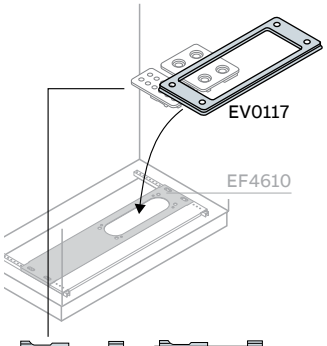


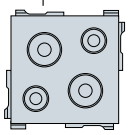
EV0119

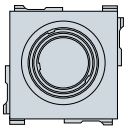
EV0121

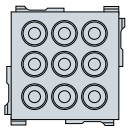
EV0123

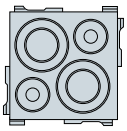
EV0124

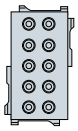
EV0127

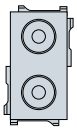
EV0126

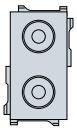
EV0125

**Cable entry flanges configurable with single inserts IP65**

Thanks to the frame and to the inserts available, it is possible to customize the flange according to the size, quantity of the cables to be installed. The inserts are equipped with a membrane that can be easily perforated by the cable without the need to use any tool. There is the possibility of installing cable frames and cable with clamp. Colour gray RAL 7035, operating temperature from -20 ° C to +125 ° C, IP 65 according to EN 60529 specifications.

| Description | Dimensions (mm) W | D | Code | Package/ No. of pieces |
|---|---|---|---|---|
| **Configurable modular flange** | | | | |
| No.1 Cable entry gland frame to configure with single insert | 214 | 90 | EV0117 | 1/1 |
| **Inserts for configurable modular flange** | | | | |
| No.10 inserts 68x68mm for entry No.4 cables, 2 cables M25 (Ø min/max 8/17mm) 2 Cables M16 (Ø min/max 5/10mm) | 68 | 68 | EV0119 | 1/10 |
| No.10 inserts 68x68mm for entry No.1 cable M32 / M40 / M50 | 68 | 68 | EV0121 | 1/10 |
| No.10 inserts 68x68mm for entry No.9 cables (Ø min/max 7/14mm) | 68 | 68 | EV0123 | 1/10 |
| No.10 inserts 68x68mm for entry No.4 cables, 2 Ø min/max 10/20 e 2 Ø min/max 20/30mm | 68 | 68 | EV0124 | 1/10 |
| No.10 inserts 34x68mm for entry No.2 cables Ø min/max 8/17mm | 34 | 68 | EV0125 | 1/10 |
| No.10 inserts 34x68mm for entry No.2 cables Ø min/max 6/13mm | 34 | 68 | EV0126 | 1/10 |
| No.10 inserts 34x68mm for entry No.10 cables Ø min/max 4/10mm | 34 | 68 | EV0127 | 1/10 |

**Useful space for inserts**

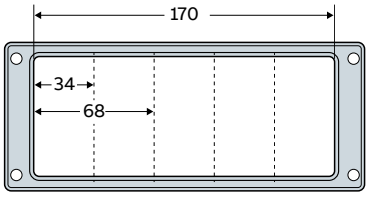


• Quick selection table 2–6 • In-depth technical information page 4–1 • Overall dimensions page 5–1

# IS2 Enclosures

## Ordering codes - Completion of structures

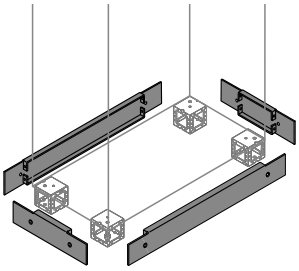

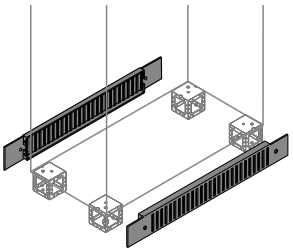

### Flanges front/rear H=100mm

Removable flanges made of 1,00mm sheet painted orange peel RAL 7012 colour (not self-supporting).

| Description | Dimensions (mm) H | W | Code | Package/ No. of pieces |
|---|---|---|---|---|
| **Blind flanges** | | | | |
| Pair of side flanges | 100 | 300 | ZN3000 | 1/2 |
| Pair of side flanges | | 400 | ZN4000 | 1/2 |
| Pair of side flanges | | 500 | ZN5000 | 1/2 |
| Pair of flanges, front/back | | 600 | ZN6000 | 1/2 |
| Pair of flanges, front/back | | 800 | ZN8000 | 1/2 |
| Pair of flanges, front/back | | 1000 | ZN1000 | 1/2 |
| Pair of flanges, front/back | | 1200 | ZN1200 | 1/2 |
| Pair of flanges, front/back | | 1200 | 2xZN6000* | 1/2 |
| Pair of flanges, front/back | | 1600 | 2xZN8000* | 1/2 |
| **Aerated flanges** | | | | |
| Pair of aerated flanges, front/back | 100 | 600 | ZN0006 | 1/2 |
| Pair of aerated flanges, front/back | | 800 | ZN0008 | 1/2 |
| Pair of aerated flanges, front/back | | 1000 | ZN0010 | 1/2 |
| Pair of aerated flanges, front/back | | 1200 | 2xZN0006* | 1/2 |
| Pair of aerated flanges, front/back | | 1600 | 2xZN0008* | 1/2 |

* IS2 structures W=1200/1600mm are provided with intermediate plinth.

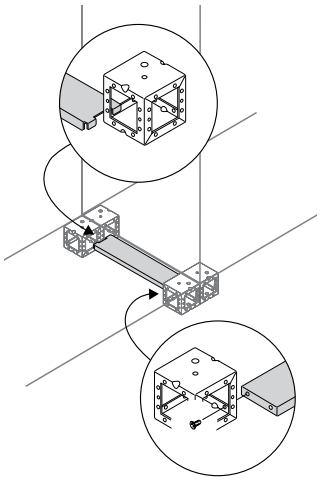

### Flange in depth for cable supporting and structure reinforcement.

The flange in depth for cable supporting and structure reinforcement has the purpose of holding the cables from the ground in the enclosure batteries during handling and to create a link between the front plinth and rear plinth of the batteries, in order to reinforce the structure.

| Description | Dimensions (mm) W | Code | Package/ No. of pieces |
|---|---|---|---|
| Support flange for cable | 400 | ZN4001 | 1/1 |
| Support flange for cable | 500 | ZN5001 | 1/1 |
| Support flange for cable | 600 | ZN6001 | 1/1 |
| Support flange for cable | 800 | ZN8001 | 1/1 |
| Support flange for cable | 1000 | ZN1001 | 1/1 |

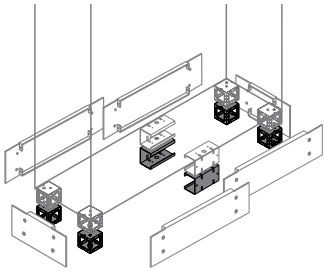

### Additional Plinth

To obtain a plinth 200mm high, order a kit of angle pieces H=100mm to be added to the angle pieces already present on the structure. Complete with 2 covering flanges (H=100mm) for each side of the structure.

| Description | Dimensions (mm) H | Code | Custom Made Service | Package/ No. of pieces |
|---|---|---|---|---|
| No. 4 angle pieces 2,5mm thickness | 100 | ZN1010 | ✓ | 1/4 |
| No. 2 angle pieces 2,5mm thickness for intermediate plinth | 100 | ZN1020 | ✓ | 1/2 |

✓ The “Custom Made Service” is valid only for structures assembled at the factory, for more information please contact your local sales network.

• Quick selection table 2–6 • In-depth technical information page 4–1 • Overall dimensions page 5–1

# IS2 Enclosures

## Ordering codes - Completion of structures

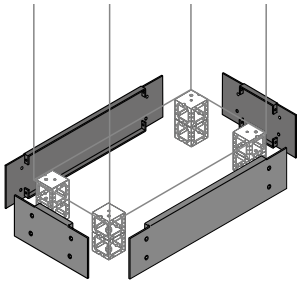

### Plinth Covering Flanges H=200mm

Removable flanges made of 1,5mm thick sheet painted orange peel RAL 7012 colour (not self-supporting).

| Description | Dimensions (mm) H | W | Code | Package/ No. of pieces |
|---|---|---|---|---|
| **Blind flanges H=200mm for additional plinth** | | | | |
| Pair of flanges, front/back/side | 200 | 400 | ZN4002 | 1/2 |
| Pair of flanges side | | 500 | ZN5002 | 1/2 |
| Pair of flanges, front/back/side | | 600 | ZN6002 | 1/2 |
| Pair of flanges, front/back/side | | 800 | ZN8002 | 1/2 |
| Pair of flanges, front/back/side | | 1000 | ZN1002 | 1/2 |
| Pair of flanges, front/back | | 1200 | 2xZN6002 | 1/2 |
| Pair of flanges, front/back | | 1600 | 2xZN8002 | 1/2 |

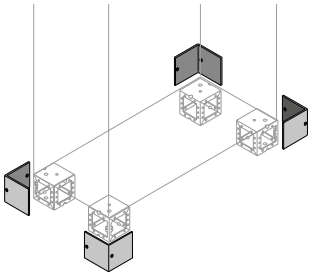

### Covers “L” shaped for single plinth

It allows to cover the sides of the plinth in case of non-use of plinth flanges.

| Description | Dimensions (mm) H | Code | Package/ No. of pieces |
|---|---|---|---|
| No.4 cover for plinth | 100 | ZN1040 | 1/4 |

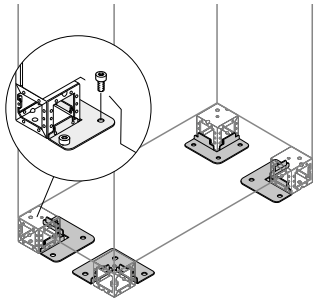

### Brackets for floor fixing

| Description | Code | Package/ No. of pieces |
|---|---|---|
| No.4 brackets for floor fixing | ZN1041 | 1/4 |

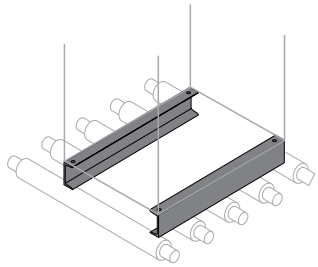

### Reinforced plinth H=100mm

Shaped steel beam, to be mounted in replacement of the angle pieces. Allows handling by means of rollers. The lateral covering flanges cannot be mounted. Grey RAL 7012 colour and with 2,5mm thickness.

| Description | Dimensions (mm) W | Code | Package/ No. of pieces |
|---|---|---|---|
| No.2 steel beams H=100mm | 400 | EZ4001 | 1/2 |
| No.2 steel beams H=100mm | 600 | EZ6001 | 1/2 |
| No.2 steel beams H=100mm | 800 | EZ8001 | 1/2 |
| No.2 steel beams H=100mm | 1000 | EZ1001 | 1/2 |
| No.2 steel beams H=100mm | 1200 | EZ1201 | 1/2 |
| No.2 steel beams H=100mm | 1600 | EZ1601 | 1/2 |

• Quick selection table 2–6 • In-depth technical information page 4–1 • Overall dimensions page 5–1

# IS2 Enclosures

## Ordering codes - Completion of structures

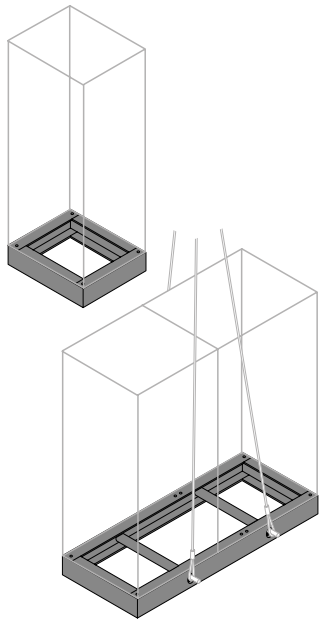

**Single plinth for side by side enclosures**

Plinth in a single piece fitted with reinforcement tubes mounted in depth, allows lifting of side-by-side enclosures and those fitted with particularly heavy accessory components.
Height: 100/200mm, length up to 6 metres.
Grey RAL 7012 colour orange peel.
The number of reinforcement tubes depends on the width of the battery (see page 8-38).
2,5mm thickness.
Available also for single structures but without reinforcement profiles.

| Description | Dimensions (mm) H | Code | Custom Made Service | Package/ No. of pieces |
|---|---|---|---|---|
| Single plinth | 100 | ZU1100 | | 1/1 |
| Single plinth | 200 | ZU2100 | | 1/1 |
| Single plinth | 100 | ZU1101 | ✓ | 1/1 |
| Single plinth | 200 | ZU2101 | ✓ | 1/1 |

- The drawing of the front view of the enclosure battery must always be enclosed, specifying the width, depth and sequence of the enclosure for each column.
- Unit of measurement for the order: METRE.
- Maximum length of 6m.

✓ The "Custom Made Service" is valid only for structures assembled at the factory, for more information please contact your local sales network.

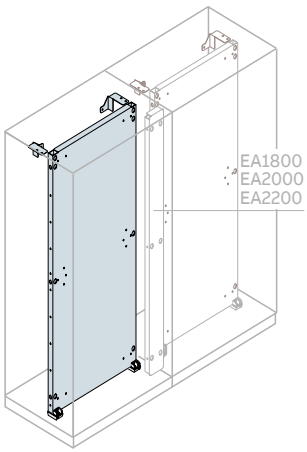


**Standard back plates**

Galvanised 2,5mm steel plate, can be inserted from the front (standard) or from the side with tracks (to be ordered separately). Complete with supports for sliding and fixing. Possibility of being placed side by side and further to the rear by means of the special kits.

| Description | Dimensions (mm) H | W | Code | Custom Made Service | Package/ No. of pieces |
|---|---|---|---|---|---|
| Mounting plate | 1400 | 400 | EA1440 | | 1/1 |
| Mounting plate | | 600 | EA1460 | | 1/1 |
| Mounting plate | | 800 | EA1480 | | 1/1 |
| Mounting plate | | 1000 | EA1411 | | 1/1 |
| Mounting plate | | 1200 | EA1412 | | 1/1 |
| Mounting plate | 1600 | 400 | EA1640 | | 1/1 |
| Mounting plate | | 600 | EA1616 | | 1/1 |
| Mounting plate | | 800 | EA1619 | | 1/1 |
| Mounting plate | | 1000 | EA1610 | | 1/1 |
| Mounting plate | | 1200 | EA1612 | | 1/1 |
| Mounting plate | 1800 | 400 | EA1841 | ✓ | 1/1 |
| Mounting plate | | 600 | EA1860 | ✓ | 1/1 |
| Mounting plate | | 800 | EA1880 | ✓ | 1/1 |
| Mounting plate | | 1000 | EA1810 | ✓ | 1/1 |
| Mounting plate | | 1200 | EA1812 | ✓ | 1/1 |
| Mounting plate | 2000 | 400 | EA2040 | ✓ | 1/1 |
| Mounting plate | | 600 | EA2060 | ✓ | 1/1 |
| Mounting plate | | 800 | EA2080 | ✓ | 1/1 |
| Mounting plate | | 1000 | EA2010 | ✓ | 1/1 |
| Mounting plate | | 1200 | EA2013 | ✓ | 1/1 |
| Mounting plate | 2200 | 400 | EA2240 | ✓ | 1/1 |
| Mounting plate | | 600 | EA2260 | ✓ | 1/1 |
| Mounting plate | | 800 | EA2280 | ✓ | 1/1 |
| Mounting plate | | 1000 | EA2210 | ✓ | 1/1 |
| Mounting plate | | 1200 | EA2212 | ✓ | 1/1 |

✓ The "Custom Made Service" is valid only for structures assembled at the factory, for more information please contact your local sales network.

• Quick selection table 2–6 • In-depth technical information page 4–1 • Overall dimensions page 5–1

# IS2 Enclosures

## Ordering codes - Completion of structures

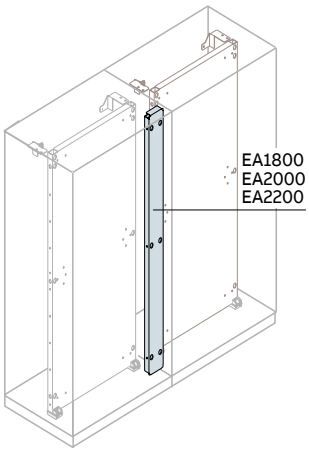


### Kit for joining plates

| Description | Dimensions (mm) H | Code | Package/ No. of pieces |
|---|---|---|---|
| Kit for joining plates | 1800 | EA1800 | 1/1 |
| Kit for joining plates | 2000 | EA2000 | 1/1 |
| Kit for joining plates | 2200 | EA2200 | 1/1 |

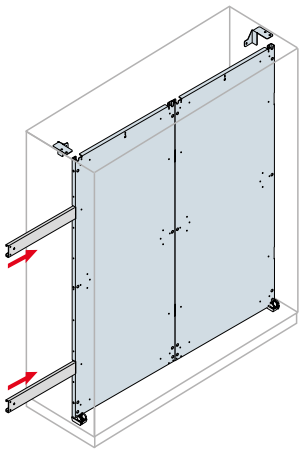

### Back plates for structure W=1600mm

| Description | Dimensions (mm) H | W | Code | Package/ No. of pieces |
|---|---|---|---|---|
| Mounting plate | 1800 | 800 | 1STQ006248B0000 | 1/1 |
| Mounting plate | 2000 | 800 | 1STQ006249B0000 | 1/1 |
| Mounting plate | 2200 | 800 | 1STQ006250B0000 | 1/1 |
| Reinforcement profile + accessories + screws plate for 800+800 backplate* | | | 1STQ006251B0000 | 1/1 |

* Mandatory in order to fix both parts for all the three heights.
Remember to order 2x 1STQ...6248/6249/6250 plates w=800mm in order to have both pieces 800+800.

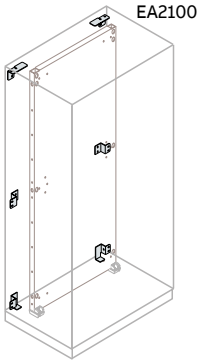


### Kit for moving back plates back

| Description | Code | Package/ No. of pieces |
|---|---|---|
| Kit for moving back plates back H=1400-1600-1800-2000-2200mm | EA2100* | 1/1 |
| Kit for mounting back plates at reduced height | EA2102** | 1/1 |
| No.6 intermediate reinforcements for fixing back plate | EA2117 | 1/1 |

*This kit can be used to fix the standard mounting plate on the side of the enclosure.
**For mounting of partial back plates it's necessary to order EB...crosspieces (see page 2-70).

# IS2 Enclosures

## Ordering codes - Completion of structures

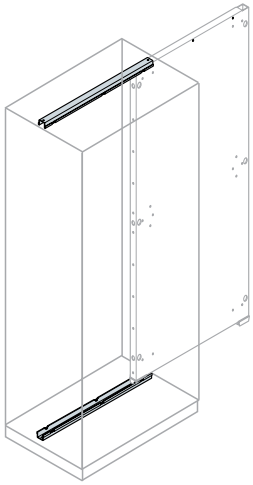

### Tracks for plate insertion

These allow lateral insertion of the standard and oversized mounting plates. They consist of two sections (one top and one bottom one).

| Description | Dimensions (mm) W | Code | Package/ No. of pieces |
|---|---|---|---|
| Tracks for plate insertion | 400 | EA0400 | 1/2 |
| Tracks for plate insertion | 600 | EA0600 | 1/2 |
| Tracks for plate insertion | 800 | EA0802 | 1/2 |
| Tracks for plate insertion | 1000 | EA1000 | 1/2 |
| Tracks for plate insertion | 1200 | EA1200 | 1/2 |
| Tracks for plate insertion | 1600 | EA1602 | 1/2 |

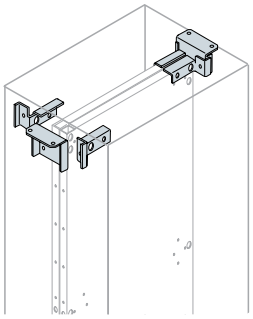

### Kit back to back

This kit allows to pair two standard plates with a small footprint.

| Description | Code | Package/ No. of pieces |
|---|---|---|
| Kit standard plates back to back | EA2118 | 1/1 |

### Back to back application

Traditional side by side: standard plate + standard plate.

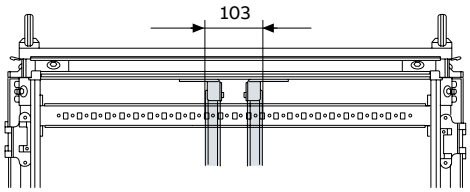


Side by side with EA2118 : standard plate + standard plate + kit EA2118.

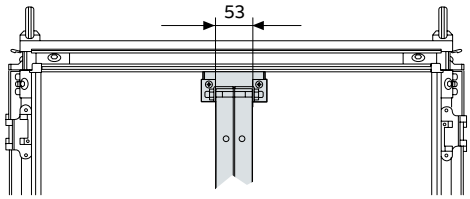


Single standard plate + opposed mounting plate

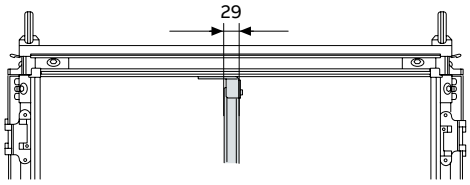


• Quick selection table 2–6 • In-depth technical information page 4–1 • Overall dimensions page 5–1

# IS2 Enclosures

## Ordering codes - Completion of structures

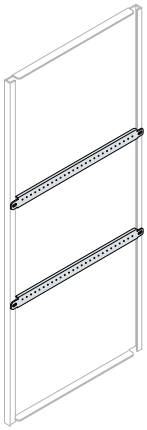

### Back plate reinforcement sections

Galvanised 2,00mm thick sections to be used as reinforcement on the standard back plates, recommended in the case of particularly heavy components fixed onto the back plate.

| Description | Dimensions (mm) W | Code | Custom Made Service | Package/ No. of pieces |
|---|---|---|---|---|
| No.2 plate horizontal reinforcement | 600 | EA6003 | ✓ | 1/2 |
| No.2 plate horizontal reinforcement | 800 | EA8003 | ✓ | 1/2 |
| No.2 plate horizontal reinforcement | 1000 | EA1003 | ✓ | 1/2 |
| No.2 plate horizontal reinforcement | 1200 | EA1203 | ✓ | 1/2 |
| No.2 plate horizontal reinforcement | 1600 | EA1603 | ✓ | 1/2 |
| No.6 plate fixing intermediate reinforcement | | EA2117 | | 1/2 |

✓ The “Custom Made Service” is valid only for structures assembled at the factory, for more information please contact your local sales network.

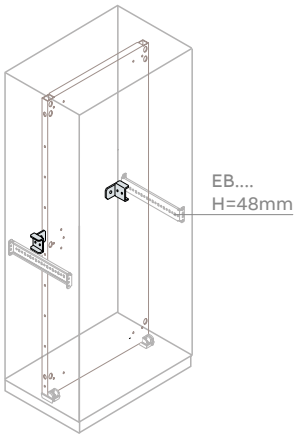


### Kit for fixing back plate in the middle

This allows further fixing of the back plate in the middle as well, in addition to side crosspieces H=48mm (see page 2-63).

| Description | Code | Package/ No. of pieces |
|---|---|---|
| Kit for fixing standard back plate | EA2115 | 1/1 |

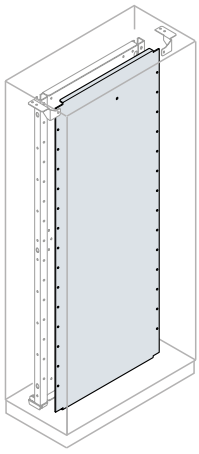

### Opposed mounting plate

Mounting plate with extremely small depth dimensions, able to mount the components on both sides (front and rear). Made of 2,5mm galvanized steel they can be inserted in the front and/or in the rear. Complete with supports for sliding and fixing.

| Description | Dimensions (mm) H | W | Code | Package/ No. of pieces |
|---|---|---|---|---|
| Opposed mounting plate | 1400 | 600 | EA5461 | 1/1 |
| Opposed mounting plate | | 800 | EA5480 | 1/1 |
| Opposed mounting plate | | 1000 | EA5413 | 1/1 |
| Opposed mounting plate | 1600 | 600 | EA5616 | 1/1 |
| Opposed mounting plate | | 800 | EA5620 | 1/1 |
| Opposed mounting plate | | 800 | EA5610 | 1/1 |
| Opposed mounting plate | 1800 | 600 | EA5861 | 1/1 |
| Opposed mounting plate | | 800 | EA5883 | 1/1 |
| Opposed mounting plate | | 1000 | EA5811 | 1/1 |
| Opposed mounting plate | | 1200 | EA5822 | 1/1 |
| Opposed mounting plate | 2000 | 600 | EA5063 | 1/1 |
| Opposed mounting plate | | 800 | EA5083 | 1/1 |
| Opposed mounting plate | | 1000 | EA5011 | 1/1 |
| Opposed mounting plate | | 1200 | EA5022 | 1/1 |
| Opposed mounting plate | 2200 | 600 | EA5360 | 1/1 |
| Opposed mounting plate | | 800 | EA5380 | 1/1 |
| Opposed mounting plate | | 1000 | EA5310 | 1/1 |
| Opposed mounting plate | | 1200 | EA5322 | 1/1 |

• Quick selection table 2–6 • In-depth technical information page 4–1 • Overall dimensions page 5–1

# IS2 Enclosures

## Ordering codes - Completion of structures

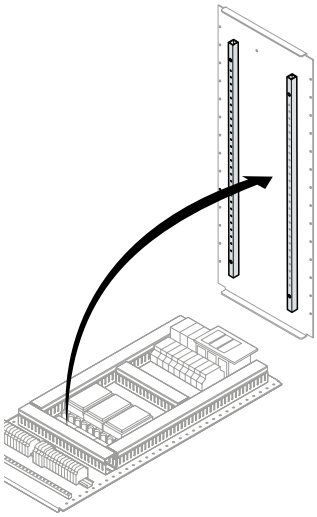

### Opposed mounting plate reinforcement sections

The reinforcement sections allow both vertical and horizontal opposite mounting plate cabling. The sections are fixed to the plate using special pressure pins, without drilling it.

| Description | Dimensions (mm) H | Code | Package/ No. of pieces |
|---|---|---|---|
| No.2 reinforcements for opposed plate | 1800 | EA0018 | 1/2 |
| No.2 reinforcements for opposed plate | 2000 | EA0020 | 1/2 |
| No.2 reinforcements for opposed plate | 2200 | EA0022 | 1/2 |

### Single standard plate + opposite mounting plate

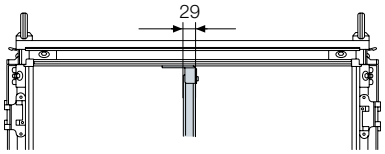


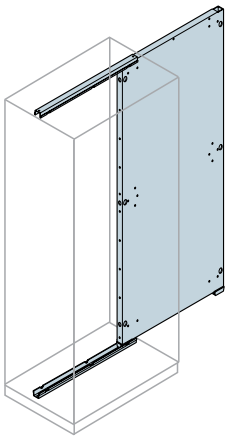

### Oversized mounting plates

Galvanised 2,5mm steel plate, can only be inserted laterally by sliding, by means of balls with tracks included in the Kit. Possibility of being placed side by side by means of the special Kit.

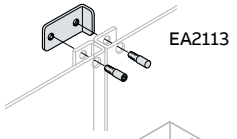


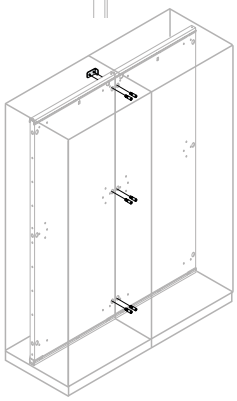

| Description | Dimensions (mm) H | W | Code | Custom Made Service | Package/ No. of pieces |
|---|---|---|---|---|---|
| Oversized mounting plates+tracks | 1400 | 400 | EA1540 | | 1/1 |
| Oversized mounting plates+tracks | | 600 | EA1560 | | 1/1 |
| Oversized mounting plates+tracks | | 800 | EA1580 | | 1/1 |
| Oversized mounting plates+tracks | | 1200 | EA1512 | | 1/1 |
| Oversized mounting plates+tracks | 1600 | 500 | EA1740 | | 1/1 |
| Oversized mounting plates+tracks | | 600 | EA1760 | | 1/1 |
| Oversized mounting plates+tracks | | 800 | EA1780 | | 1/1 |
| Oversized mounting plates+tracks | | 1000 | EA1710 | | 1/1 |
| Oversized mounting plates+tracks | | 1200 | EA1712 | | 1/1 |
| Oversized mounting plates+tracks | 1800 | 400 | EA1940 | ✓ | 1/1 |
| Oversized mounting plates+tracks | | 600 | EA1960 | ✓ | 1/1 |
| Oversized mounting plates+tracks | | 800 | EA1981 | ✓ | 1/1 |
| Oversized mounting plates+tracks | | 1000 | EA1910 | ✓ | 1/1 |
| Oversized mounting plates+tracks | | 1200 | EA1912 | ✓ | 1/1 |
| No. 2 oversized mounting plates + track + joining kit | | 1600 | EA1916 | ✓ | 1/1 |
| Oversized mounting plates+tracks | 2000 | 400 | EA2140 | ✓ | 1/1 |
| Oversized mounting plates+tracks | | 600 | EA2161 | ✓ | 1/1 |
| Oversized mounting plates+tracks | | 800 | EA2180 | ✓ | 1/1 |
| Oversized mounting plates+tracks | | 1000 | EA2110 | ✓ | 1/1 |
| Oversized mounting plates+tracks | | 1200 | EA2112 | ✓ | 1/1 |
| No. 2 oversized mounting plates + track + joining kit | | 1600 | EA2116 | ✓ | 1/1 |
| Oversized mounting plates+tracks | 2200 | 400 | EA2340 | ✓ | 1/1 |
| Oversized mounting plates+tracks | | 600 | EA2360 | ✓ | 1/1 |
| Oversized mounting plates+tracks | | 800 | EA2380 | ✓ | 1/1 |
| Oversized mounting plates+tracks | | 1000 | EA2310 | ✓ | 1/1 |
| Oversized mounting plates+tracks | | 1200 | EA2312 | ✓ | 1/1 |
| No. 2 oversized mounting plates + track + joining kit | | 1600 | EA2316 | ✓ | 1/1 |
| Kit for joining oversized plates | | | EA2113 | | 1/1 |

✓ The “Custom Made Service” is valid only for structures assembled at the factory, for more information please contact your local sales network.

• Quick selection table 2–6 • In-depth technical information page 4–1 • Overall dimensions page 5–1

# IS2 Enclosures

## Ordering codes - Completion of structures

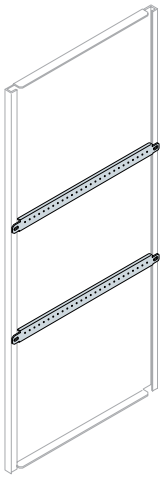

### Oversized back plate reinforcement sections

Galvanised 2,00 thick sections to be used as reinforcement on the standard back plates, recommended in the case of particularly heavy components fixed onto the back plate.

| Description | Dimensions (mm) W | Code | Custom Made Service | Package/ No. of pieces |
|---|---|---|---|---|
| No.2 oversized plate horizontal reinforcement | 600 | EA6002 | ✓ | 1/2 |
| No.2 oversized plate horizontal reinforcement | 800 | EA8002 | ✓ | 1/2 |
| No.2 oversized plate horizontal reinforcement | 1000 | EA1002 | ✓ | 1/2 |
| No.2 oversized plate horizontal reinforcement | 1200 | EA1202 | ✓ | 1/2 |

✓ The "Custom Made Service" is valid only for structures assembled at the factory, for more information please contact your local sales network.

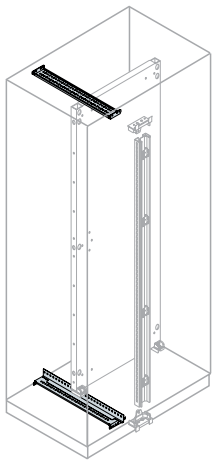

### Sliding guides for insertion of back plate with partial width

These allow insertion from the front of the standard back plate in structures with cable container or in the case of partial use of the structure with double door by means of a special sliding track inserted into the bottom crosspiece.

| Description | Dimensions (mm) D | Code | Package/ No. of pieces |
|---|---|---|---|
| No.1 sliding guide and No.1 crosspiece of back plate | 400 | EB4101 | 1/2 |
| No.1 sliding guide and No.1 crosspiece of back plate | 500 | EB5101 | 1/2 |
| No.1 sliding guide and No.1 crosspiece of back plate | 600 | EB6101 | 1/2 |
| No.1 sliding guide and No.1 crosspiece of back plate | 800 | EB8101 | 1/2 |
| No.1 sliding guide and No.1 crosspiece of back plate | 1000 | EB1101 | 1/2 |

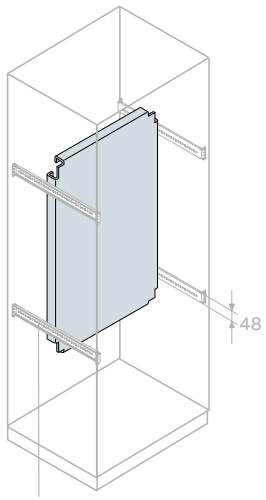


EB0400-EB0500-EB0600-EB0800
EB1000-EB1200

### Partial back plates

Galvanised 2,5mm thick back plates. These are fixed onto the crosspieces H=48mm. (EB....).

| Description | Dimensions (mm) H | W | Code | Package/ No. of pieces |
|---|---|---|---|---|
| Partial back plate | 200 | 600 | EA2062 | 1/1 |
| Partial back plate | 300 | | EA3061 | 1/1 |
| Partial back plate | 400 | | EA4061 | 1/1 |
| Partial back plate | 500 | | EA5061 | 1/1 |
| Partial back plate | 600 | | EA6061 | 1/1 |
| Partial back plate | 800 | | EA8061 | 1/1 |
| Partial back plate | 1000 | | EA1061 | 1/1 |
| Partial back plate | 200 | 800 | EA2081 | 1/1 |
| Partial back plate | 300 | | EA3081 | 1/1 |
| Partial back plate | 400 | | EA4081 | 1/1 |
| Partial back plate | 500 | | EA5081 | 1/1 |
| Partial back plate | 600 | | EA6081 | 1/1 |
| Partial back plate | 800 | | EA8081 | 1/1 |
| Partial back plate | 1000 | | EA1081 | 1/1 |
| Kit for moving partial back plates back | | | EA2101 | 1/1 |

• Quick selection table 2–6 • In-depth technical information page 4–1 • Overall dimensions page 5–1

# IS2 Enclosures

## Ordering codes - Completion of structures

EB0400-EB0500-EB0600-EB0800
EB1000-EB1200

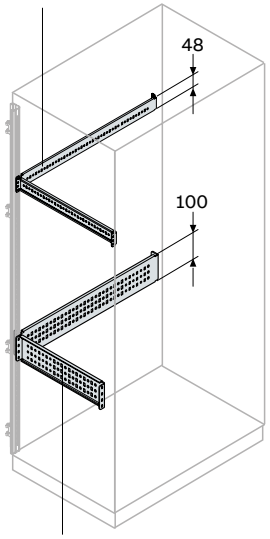


EB0440-EB0550-EB0660-EB0880
EB1010-EB1220

### Crosspieces for fixing accessories and partial plate

Multi-purpose galvanised 2,00mm thick sheet crosspieces, these are fixed between the uprights and allow the partial back plates and busbar holders for flat and shaped section busbars (to be drilled).

| Description | Dimensions (mm) W/D | Code | Custom Made Service | Package/ No. of pieces |
|---|---|---|---|---|
| **Crosspieces H=48mm for fixing accessories and partial plate** | | | | |
| No.2 crosspieces back/side | 400 | EB0400 | ✓ | 1/2 |
| No.2 crosspieces back | 500 | EB0500 | ✓ | 1/2 |
| No.2 crosspieces back/side | 600 | EB0600 | ✓ | 1/2 |
| No.2 crosspieces back/side | 800 | EB0800(1) | ✓ | 1/2 |
| No.2 crosspieces back/side | 1000 | EB1000 | ✓ | 1/2 |
| No.2 crosspieces back | 1200 | EB1200 | ✓ | 1/2 |
| **Crosspieces H=100mm for fixing accessories and partial plate** | | | | |
| No.2 crosspieces back/side | 400 | EB0440 | ✓ | 1/2 |
| No.2 crosspieces back | 500 | EB0550 | ✓ | 1/2 |
| No.2 crosspieces back/side | 600 | EB0660 | ✓ | 1/2 |
| No.2 crosspieces back/side | 800 | EB0880(1) | ✓ | 1/2 |
| No.2 crosspieces back/side | 1000 | EB1010 | ✓ | 1/2 |
| No.2 crosspieces back | 1200 | EB1020 | ✓ | 1/2 |

(1) For structures W=1600mm, order 2 pieces

✓ The "Custom Made Service" is valid only for structures assembled at the factory, for more information please contact your local sales network.

EB4860-EB4880-EB4810

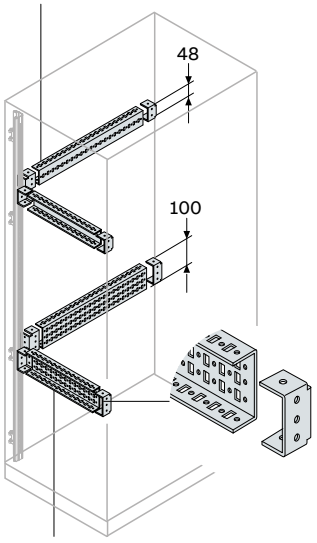


EB1060-EB1080-EB1011

### Crosspieces "C" shaped*

Multi-purpose galvanised 2,00mm thick sheet crosspieces with 3 fixing plane, these are fixed between the uprights and allow the partial back plates and busbar holders for flat and shaped section busbars (to be drilled).

| Description | Dimensions (mm) W/D | Code | Package/ No. of pieces |
|---|---|---|---|
| **Crosspieces "C" shaped H=48mm for fixing accessories and partial plate** | | | |
| No.2 crosspieces "C" front/side | 600 | EB4860(1) | 1/2 |
| No.2 crosspieces "C" front/side | 800 | EB4880(2) | 1/2 |
| No.2 crosspieces "C" front/side | 1000 | EB4810 | 1/2 |
| **Crosspieces "C" shaped H=100mm for fixing accessories and partial plate** | | | |
| No.2 crosspieces "C" front/side | 600 | EB1060(1) | 1/2 |
| No.2 crosspieces "C" front/side | 800 | EB1080(2) | 1/2 |
| No.2 crosspieces "C" front/side | 1000 | EB1011 | 1/2 |

(1) For structures W=1200mm, order 2 pieces.
(2) For structures W=1600mm, order 2 pieces.

### Example of using crosspieces H=48/100mm

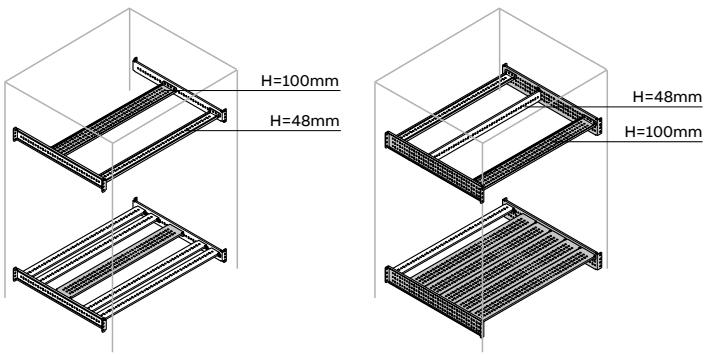


• Quick selection table 2–6 • In-depth technical information page 4–1 • Overall dimensions page 5–1

# IS2 Enclosures

## Ordering codes - Completion of structures

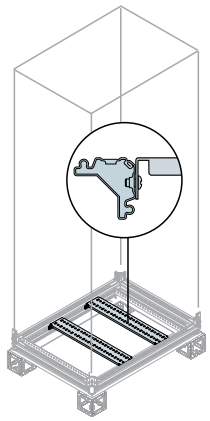

### Crosspieces for fixing heavy accessories (mounted in depth)

| Description | Dimensions (mm) D | Code | Package/ No. of pieces |
|---|---|---|---|
| No. 2 crosspieces mounted for base | 400 | EB4100 | 1/2 |
| No. 2 crosspieces mounted for base | 500 | EB5100 | 1/2 |
| No. 2 crosspieces mounted for base | 600 | EB6100 | 1/2 |
| No. 2 crosspieces mounted for base | 800 | EB8100 | 1/2 |
| No. 2 crosspieces mounted for base | 1000 | EB1100 | 1/2 |



### Transformer holder crosspieces

Transformer holder crosspieces made of 3,5mm steel treated with white galvanization, complete with No.4 fixing screw M12, M12x60.).

| Description | Dimensions (mm) D | Code | Package/ No. of pieces |
|---|---|---|---|
| Pair of transformer holder crosspieces | 600 | EB6102 | 1/2 |
| Pair of transformer holder crosspieces | 800 | EB8102 | 1/2 |
| Pair of transformer holder crosspieces | 1000 | EB1102 | 1/2 |

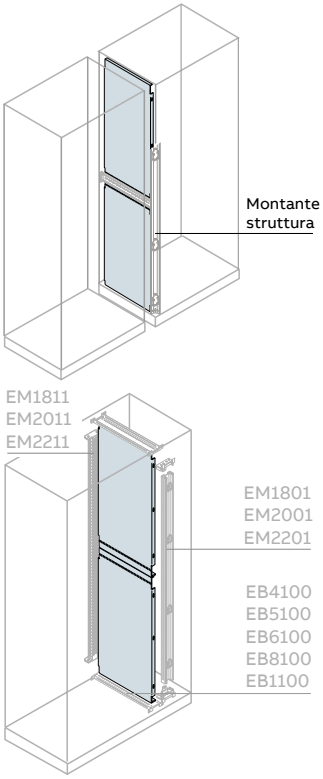


### Vertical partition panels for side-by-side structures

Panel made of 1,2mm thick galvanised steel sheet divided into two parts. When there is the lateral crosspiece H=48mm, use pre-shearing.

| Description | Dimensions (mm) H | D | Code | Package/ No. of pieces |
|---|---|---|---|---|
| Vertical partition panels | 1800 | 400 | EE1841 | 1/1 |
| Vertical partition panels | | 500 | EE1851 | 1/1 |
| Vertical partition panels | | 600 | EE1861 | 1/1 |
| Vertical partition panels | | 800 | EE1881 | 1/1 |
| Vertical partition panels | | 1000 | EE1811 | 1/1 |
| Vertical partition panels | 2000 | 400 | EE2041 | 1/1 |
| Vertical partition panels | | 500 | EE2051 | 1/1 |
| Vertical partition panels | | 600 | EE2061 | 1/1 |
| Vertical partition panels | | 800 | EE2081 | 1/1 |
| Vertical partition panels | | 1000 | EE2011 | 1/1 |
| Vertical partition panels | 2200 | 400 | EE2241 | 1/1 |
| Vertical partition panels | | 500 | EE2251 | 1/1 |
| Vertical partition panels | | 600 | EE2261 | 1/1 |
| Vertical partition panels | | 800 | EE2281 | 1/1 |
| Vertical partition panels | | 1000 | EE2211 | 1/1 |

• Quick selection table 2–6 • In-depth technical information page 4–1 • Overall dimensions page 5–1

# IS2 Enclosures

## Ordering codes - Completion of structures

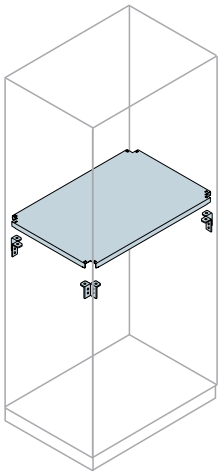

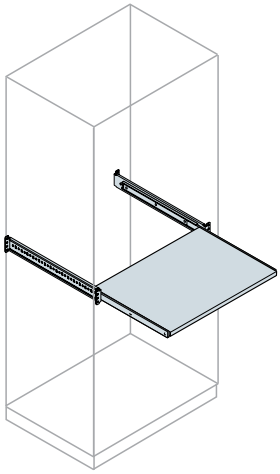

### Horizontal partition panels

Panel made of 1,5mm thick galvanised steel sheet. This allows horizontal separation of the different components inside the structure.

| Description | Dimensions (mm) H | D | Code | Package/ No. of pieces |
|---|---|---|---|---|
| **Horizontal fixed partition panels** | | | | |
| Horizontal fixed partition panels | 400 | 400 | EE4041 | 1/1 |
| Horizontal fixed partition panels | 600 | | EE6041 | 1/1 |
| Horizontal fixed partition panels | 800 | | EE8041 | 1/1 |
| Horizontal fixed partition panels | 1000 | | EE1041 | 1/1 |
| Horizontal fixed partition panels | 400 | 500 | EE4051 | 1/1 |
| Horizontal fixed partition panels | 600 | | EE6051 | 1/1 |
| Horizontal fixed partition panels | 800 | | EE8051 | 1/1 |
| Horizontal fixed partition panels | 1000 | | EE1051 | 1/1 |
| Horizontal fixed partition panels | 600 | 600 | EE6061 | 1/1 |
| Horizontal fixed partition panels | 800 | | EE8061 | 1/1 |
| Horizontal fixed partition panels | 1000 | | EE1061 | 1/1 |
| Horizontal fixed partition panels | 800 | | EE8081 | 1/1 |
| Horizontal fixed partition panels | 1000 | | EE1081 | 1/1 |
| Horizontal fixed partition panels | 1000 | 1000 | EE1011 | 1/1 |
| **Horizontal slidind partition panels** [(1)] | | | | |
| Horizontal sliding partition panels | 600 | 600 | EE1003K | 1/1 |
| Horizontal sliding partition panels | | 800 | EE1001K | 1/1 |
| Horizontal sliding partition panels | 800 | 600 | EE1004K | 1/1 |
| Horizontal sliding partition panels | | 800 | EE1002K | 1/1 |

[(1)] Including the crosspieces for fixing and relative accessories.
Can not be mounted with double door in structures W=800/1000/1200/1600mm with overlapping doors closing.

• Quick selection table 2–6 • In-depth technical information page 4–1 • Overall dimensions page 5–1

# IS2 Enclosures

## Ordering codes - Completion of structures

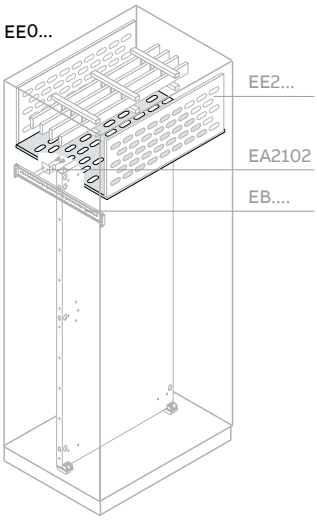


### Horizontal busbar segregations

Drilled sheet panels (IP20) in 1,5mm sheet thickness. Allow segregation of the busbar system. Cannot be mounted in cabinets with compartments, or with DIN frame.

| Description | Dimensions (mm) H | D | Code | Package/ No. of pieces |
|---|---|---|---|---|
| **Internal cable container[1]** | | | | |
| Horizontal busbar segregation | 200 | 400 | EE0240 | 1/1 |
| Horizontal busbar segregation | | 500 | EE0250 | 1/1 |
| Horizontal busbar segregation | | 600 | EE0260 | 1/1 |
| Horizontal busbar segregation | | 800 | EE0280 | 1/1 |
| Horizontal busbar segregation | 400 | 400 | EE0440 | 1/1 |
| Horizontal busbar segregation | | 500 | EE0450 | 1/1 |
| Horizontal busbar segregation | | 600 | EE0460 | 1/1 |
| Horizontal busbar segregation | | 800 | EE0480 | 1/1 |
| **External cable container** | | | | |
| Horizontal busbar segregation | 300 | 400 | EE0340 | 1/1 |
| Horizontal busbar segregation | | 500 | EE0355 | 1/1 |
| Horizontal busbar segregation | | 600 | EE0360 | 1/1 |
| Horizontal busbar segregation | | 800 | EE0380 | 1/1 |
| **Structure** | | | | |
| Horizontal busbar segregation | 600 | 400 | EE0640 | 1/1 |
| Horizontal busbar segregation | | 500 | EE0650 | 1/1 |
| Horizontal busbar segregation | | 600 | EE0660 | 1/1 |
| Horizontal busbar segregation | | 800 | EE0680 | 1/1 |
| Horizontal busbar segregation | 800 | 400 | EE0840 | 1/1 |
| Horizontal busbar segregation | | 500 | EE0850 | 1/1 |
| Horizontal busbar segregation | | 600 | EE0860 | 1/1 |
| Horizontal busbar segregation | | 800 | EE0880 | 1/1 |
| Horizontal busbar segregation | 1000 | 400 | EE1040 | 1/1 |
| Horizontal busbar segregation | | 500 | EE1050 | 1/1 |
| Horizontal busbar segregation | | 600 | EE1060 | 1/1 |
| Horizontal busbar segregation | | 800 | EE1080 | 1/1 |

[1] To be used with rear upright EM..11.

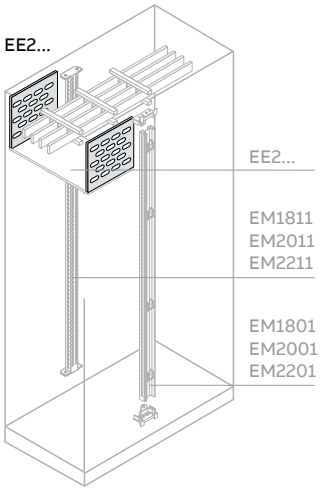


### Vertical busbar segregations

Drilled sheet panels (IP20) in 1,5mm sheet thickness. Allow segregation of the busbar system.

| Description | Dimensions (mm) H | D | Code | Package/ No. of pieces |
|---|---|---|---|---|
| **Internal cable container[1]** | | | | |
| Vertical busbar segregation | 200 | 200 | EE2020 | 1/2 |
| Vertical busbar segregation | | 400 | EE2040 | 1/2 |
| **External cable container** | | | | |
| Vertical busbar segregation | 200 | 300 | EE2030 | 1/2 |
| **Structure** | | | | |
| Vertical busbar segregation | 200 | 600 | EE2600 | 1/2 |
| Vertical busbar segregation | | 800 | EE2800 | 1/2 |
| Vertical busbar segregation | | 1000 | EE2100 | 1/2 |

[1] Its necessary to use the intermediate upright

• Quick selection table 2–6 • In-depth technical information page 4–1 • Overall dimensions page 5–1

# IS2 Enclosures

## Ordering codes - Completion of structures

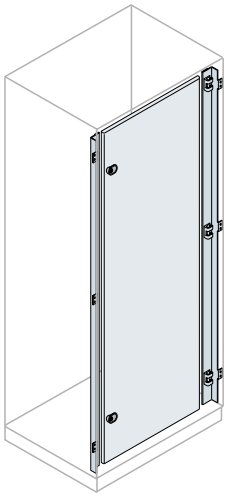

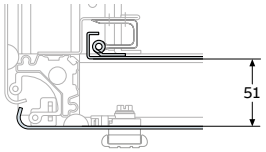


### Inner doors

Internal door made of 1,5mm thick galvanised steel sheet, complete with reinforcement tube, frame, hinges and No.2 boxes with double tongue key interchangeable with inserts (see page 2-108). Maximum opening angle of 100°.

| Description | Dimensions (mm) H | W | Code | Custom Made Service | Package/ No. of pieces |
|---|---|---|---|---|---|
| Internal inner door | 1800 | 600 | EE1860K | ✓ | 1/1 |
| Internal inner door | | 800 | EE1880K | ✓ | 1/1 |
| Internal inner door | | 1000 | EE1810K | ✓ | 1/1 |
| Internal inner door | 2000 | 600 | EE2060K | ✓ | 1/1 |
| Internal inner door | | 800 | EE2080K | ✓ | 1/1 |
| Internal inner door | | 1000 | EE2010K | ✓ | 1/1 |
| Internal inner door | 2200 | 600 | EE2260K | ✓ | 1/1 |
| Internal inner door | | 800 | EE2280K | ✓ | 1/1 |
| Internal inner door | | 1000 | EE2210K | ✓ | 1/1 |

For H=1400 and 1600 mm inner doors, please contact ABB.

✓ The “Custom Made Service” is valid only for structures assembled at the factory, for more information please contact your local sales network.

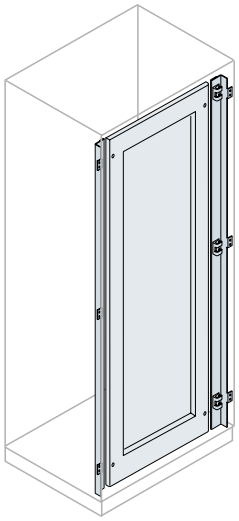

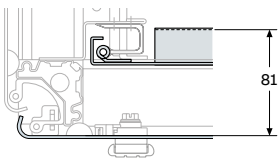


### Recessed inner doors

Internal door made of 1,5mm thick steel sheet, complete with frame, hinges and No.2 boxes with double tongue key interchangeable with inserts (see page 2-108). Maximum opening angle of 100°.

| Description | Dimensions (mm) H | W | Code | Custom Made Service | Package/ No. of pieces |
|---|---|---|---|---|---|
| Recessed inner door | 1800 | 600 | EE1906K | ✓ | 1/1 |
| Recessed inner door | | 800 | EE1908K | ✓ | 1/1 |
| Recessed inner door | | 1000 | EE1910K | ✓ | 1/1 |
| Recessed inner door | 2000 | 600 | EE2106K | ✓ | 1/1 |
| Recessed inner door | | 800 | EE2108K | ✓ | 1/1 |
| Recessed inner door | | 1000 | EE2110K | ✓ | 1/1 |
| Recessed inner door | 2200 | 600 | EE2306K | ✓ | 1/1 |
| Recessed inner door | | 800 | EE2308K | ✓ | 1/1 |
| Recessed inner door | | 1000 | EE2310K | ✓ | 1/1 |

For structures W=1200/1600mm, mount two inner doors with W=600mm and W=800mm respectively plus intermediate upright EM... as overlap.

✓ The “Custom Made Service” is valid only for structures assembled at the factory, for more information please contact your local sales network.

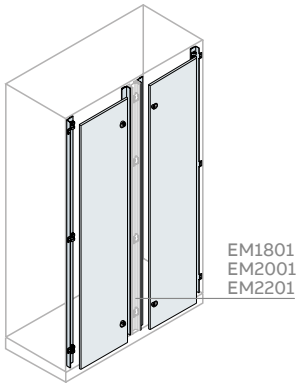

# IS2 Enclosures

## Ordering codes - Completion of structures

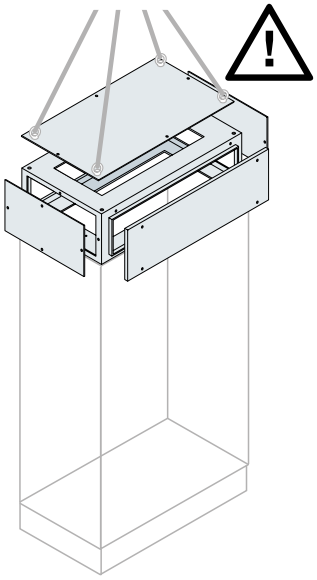

**Top container for cable connection (not for handling)**
This is a completely segregated container H=200mm to be mounted on the roof of the structure, dedicated to circulation of conductors. Fully accessible from all sides. Degree of protection IP41.

| Description | Dimensions (mm) W | D | Code | Package/ No. of pieces |
|---|---|---|---|---|
| **Height 200mm** | | | | |
| Top container for cable connection | 400 | 400 | ER4040K | 1/1 |
| Top container for cable connection | 600 | | ER6040K [1] | 1/1 |
| Top container for cable connection | 800 | | ER8040K [1] | 1/1 |
| Top container for cable connection | 1000 | | ER1041K | 1/1 |
| Top container for cable connection | 400 | 500 | ER4050K | 1/1 |
| Top container for cable connection | 600 | | ER6050K [1] | 1/1 |
| Top container for cable connection | 800 | | ER8050K [1] | 1/1 |
| Top container for cable connection | 1000 | | ER1050K | 1/1 |
| Top container for cable connection | 400 | 600 | ER4060K | 1/1 |
| Top container for cable connection | 600 | | ER6060K [1] | 1/1 |
| Top container for cable connection | 800 | | ER8061K [1] | 1/1 |
| Top container for cable connection | 1000 | | ER1060K | 1/1 |
| Top container for cable connection | 400 | 800 | ER4080K | 1/1 |
| Top container for cable connection | 600 | | ER6080K [1] | 1/1 |
| Top container for cable connection | 800 | | ER8080K [1] | 1/1 |
| Top container for cable connection | 1000 | | ER1080K | 1/1 |
| Top container for cable connection | 400 | 1000 | ER4011K | 1/1 |
| Top container for cable connection | 600 | | ER6010K [1] | 1/1 |
| Top container for cable connection | 800 | | ER8010K [1] | 1/1 |
| Top container for cable connection | 1000 | | ER1010K | 1/1 |
| Kit for placing cable connection container at side | | | ER1000 | 1/1 |

[1] For structures with W=1200/1600mm, order two pieces with W=600 and W=800mm respectively plus relative joining Kit ER1000.

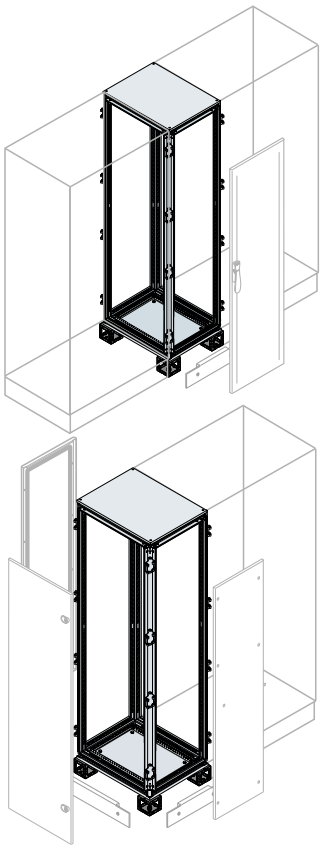

**Container for external cable connection W=300mm**
Structure to be completed with blind door placed frontally or laterally, front and rear panel, plinth and relative flanges. Can be placed side-by-side with the basic structure by means of side-by-side positioning Kit EV0002-EV0003-EV0006.

| Description | Dimensions (mm) W | D | Code | Package/ No. of pieces |
|---|---|---|---|---|
| **Width 300mm** | | | | |
| Container for external cable container | 1800 | 400 | ER3040K | 1/1 |
| Container for external cable container | | 500 | ER3050K | 1/1 |
| Container for external cable container | | 600 | ER3060K | 1/1 |
| Container for external cable container | | 800 | ER3080K | 1/1 |
| Container for external cable container | | 1000 | ER3010K | 1/1 |
| Container for external cable container | 2000 | 400 | ER3041K | 1/1 |
| Container for external cable container | | 500 | ER3051K | 1/1 |
| Container for external cable container | | 600 | ER3061K | 1/1 |
| Container for external cable container | | 800 | ER3081K | 1/1 |
| Container for external cable container | | 1000 | ER3011K | 1/1 |
| Container for external cable container | 2200 | 400 | ER3042K | 1/1 |
| Container for external cable container | | 500 | ER3052K | 1/1 |
| Container for external cable container | | 600 | ER3062K | 1/1 |
| Container for external cable container | | 800 | ER3082K | 1/1 |
| Container for external cable container | | 1000 | ER3012K | 1/1 |

• Quick selection table 2–6 • In-depth technical information page 4–1 • Overall dimensions page 5–1

# IS2 Enclosures

## Ordering codes - Completion of structures

EV0002

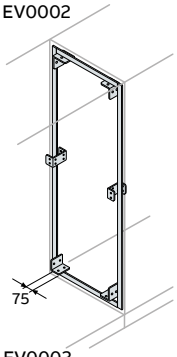


**Kit for placing structures side by side**

Adhesive high density polyurethane gasket – guarantees the degree of protection on several columns side by side. Columns can be coupled side by side or back to back.

| Description | Code | Custom Made Service | Package/ No. of pieces |
|---|---|---|---|
| Corner joining and reinforcement kit for lifting | EV0002 (*) | | 1/1 |
| Cabinet joining kit | EV0003 | ✓ | 1/1 |
| Internal cabinet joing kit | EV0006 (*) | ✓ | 1/1 |
| No.8 small pins for placing structures side by side | EV0008 | | 1/8 |

(*) Can be fitted with EV0008 accessory

✓ The “Custom Made Service” is valid only for structures assembled at the factory, for more information please contact your local sales network.

EV0003

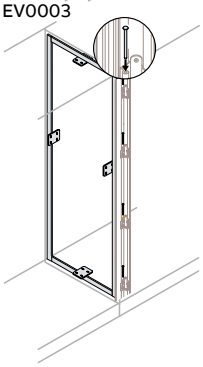

**EV0003 internal external enclosure joining Kit**

The kit is made up of 4 squares, adhesive gasket and 8 small pins. Joining takes place:

- from the inside using the 4 squares which can be mounted the whole height or depth of the enclosures
- from the outside using the 8 small pins inserted in the hinges (they require the rear panel to be dismantled).

EV0006

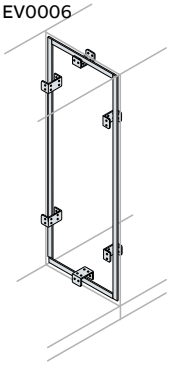

**Internal enclosure joining Kit**

**EV0006**

The kit is made up of 6 squares and an adhesive gasket. Joining takes place from the inside using the 6 squares which can be mounted the whole height or depth of the enclosure.

**EV0002**

The kit is made up of 6 squares (4 “L”-shaped and two “C”-shaped) and an adhesive gasket. Joining takes place from the inside using the 4 “L”-shaped squares which can be mounted in the corners and the 2 “C”-shaped squares for the whole height of the enclosure. Does not allow maximum moving back of the standard and oversized back plate (75mm less).

EV0008

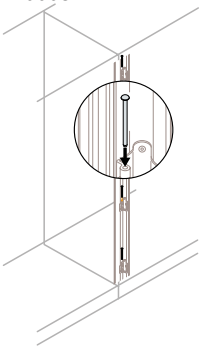

**Mounting possibilities**

| | | | | | | | | | | |
|---|---|---|---|---|---|---|---|---|---|---|
| **EV0003** | OK | OK | OK | OK | OK | OK | OK | OK | OK | OK |
| **EV0002** | OK | OK | ✋ | OK | OK | OK | ✋ | OK | OK | OK |
| **EV0006** | OK | ✋ | OK | ✋ | ✋ | OK | ✋ | ✋ | ✋ | ✋ |

• Quick selection table 2–6 • In-depth technical information page 4–1 • Overall dimensions page 5–1

# IS2 Enclosures

## Ordering codes - Completion of structures

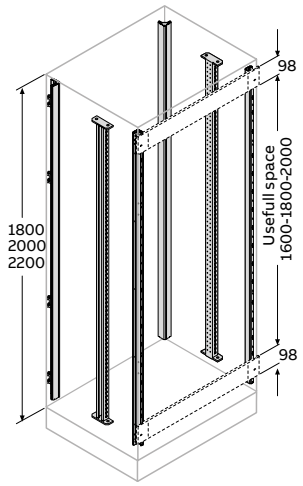


### Configuration with compartments

**Uprights for configuration with compartments**

Uprights made of galvanised steel, consisting of a closed section drilled with 25 mm pitch preset for mounting compartment cubicles and partial doors. Can be assembled on base and top (see page 2-48). The useful dimension is always 200mm less than the total height of the enclosure.

| Description | Dimensions (mm) H | Code | Package/ No. of pieces |
|---|---|---|---|
| Uprights for configuration with compartments | 1800 | EM1802 | 1/6 |
| Uprights for configuration with compartments | 2000 | EM2002 | 1/6 |
| Uprights for configuration with compartments | 2200 | EM2202 | 1/6 |

Order compensation panels H=100mm (EH6010/EH8010). See page 2-75.
Examples of configuration and technical characteristics at page 2-114.

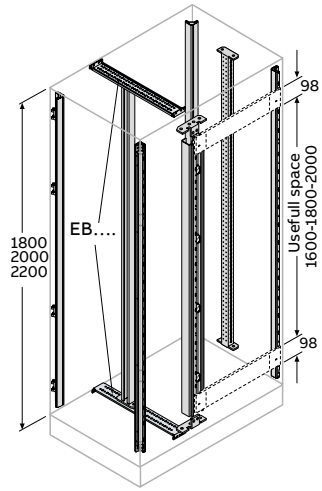


**Uprights for configuration with compartments + internal cable container**

No.7 uprights made of galvanized steel, consisting of a closed section drilled with 25 mm pitch preset for mounting compartment cubicles and internal cable container W=200/400 mm. The useful dimension is always 200mm less than the total height of the enclosure.

| Description | Dimensions (mm) H | Code | Package/ No. of pieces |
|---|---|---|---|
| Uprights for configuration with compartments + int. cable container | 1800 | EM1803 | 1/7 |
| Uprights for configuration with compartments + int. cable container | 2000 | EM2003 | 1/7 |
| Uprights for configuration with compartments + int. cable container | 2200 | EM2203 | 1/7 |

For the version with cable container, both the code of the crosspieces (EB...) and the code of the uprights (EM1803- EM2003-EM2203) must be ordered.
Order compensation panels H=100mm (EH6010K/EH8010K). See page 2-79.

**Crosspieces for intermediate uprights (mounted depth-wise)**

| Description | Dimensions (mm) D | Code | Package/ No. of pieces |
|---|---|---|---|
| **Width 300mm** | | | |
| Couple of crosspieces for base | 400 | EB4100 | 1/2 |
| Couple of crosspieces for base | 500 | EB5100 | 1/2 |
| Couple of crosspieces for base | 600 | EB6100 | 1/2 |
| Couple of crosspieces for base | 800 | EB8100 | 1/2 |
| Couple of crosspieces for base | 1000 | EB1100 | 1/2 |

For the version with cable container, both the code of the crosspieces (EB...) and the code of the uprights (EM1803- EM2003-EM2203) must be ordered.

# IS2 Enclosures

## Ordering codes - Completion of structures

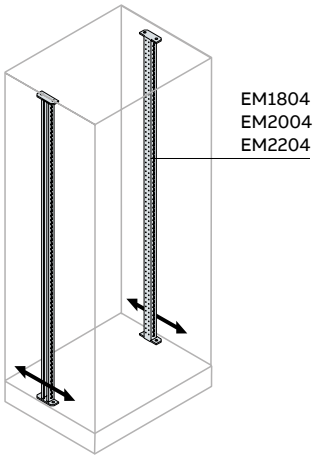


### Configuration with compartments

**Intermediate uprights (mounted in depth)**

No.2 uprights made of galvanized steel, consisting of a closed section drilled with 25 mm pitch preset for mounting compartment cubicles.

| Description | Dimensions (mm) H | Code | Package/ No. of pieces |
|---|---|---|---|
| Pair of uprights for mounting compartment cubicles in depth | 1800 | EM1804 | 1/2 |
| Pair of uprights for mounting compartment cubicles in depth | 2000 | EM2004 | 1/2 |
| Pair of uprights for mounting compartment cubicles in depth | 2200 | EM2204 | 1/2 |

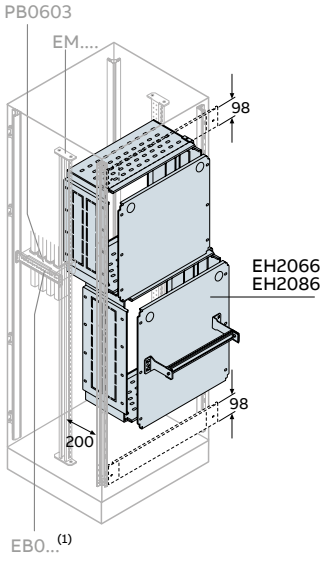


**Compartment cubicle**

Made of 1,5mm galvanised sheet, able to construct Form 3 segregations, it is pre-sheared on the sides and bottom for use as conductor passage. Complete with withdrawable back plate for bench assembly of the apparatus, reversible, to obtain 2 different depths. The useful dimension is always 200mm less than the total height of the enclosure.

| Description | Dimensions (mm) H | W | Code | Custom Made Service | Package/ No. of pieces |
|---|---|---|---|---|---|
| Compartment cubicle | | | EH2060 | ✓ | 1/1 |
| Compartment cubicle | | | EH3060 | ✓ | 1/1 |
| Compartment cubicle | | | EH4063 | ✓ | 1/1 |
| Compartment cubicle | | | EH5060 | ✓ | 1/1 |
| Compartment cubicle | | | EH6060 | ✓ | 1/1 |
| Compartment cubicle | | | EH8060 | ✓ | 1/1 |
| Compartment cubicle | | | EH1060 | ✓ | 1/1 |
| Compartment cubicle | | | EH2180 | ✓ | 1/1 |
| Compartment cubicle | | | EH3080 | ✓ | 1/1 |
| Compartment cubicle | | | EH4080 | ✓ | 1/1 |
| Compartment cubicle | | | EH5080 | ✓ | 1/1 |
| Compartment cubicle | | | EH6080 | ✓ | 1/1 |
| Compartment cubicle | | | EH8080 | ✓ | 1/1 |
| Compartment cubicle | | | EH1080 | ✓ | 1/1 |
| Compartment cubicle with DIN rai, adjustable in depth | | | EH2066 | | 1/1 |
| Compartment cubicle with DIN rai, adjustable in depth | | | EH2086 | | 1/1 |

(1) The dimension of the crosspieces EB0... (see page 2-70) is always 200mm less then the total height of the enclosure.
Examples of configuration and technical characteristics at page 2-120.

✓ The “Custom Made Service” is valid only for structures assembled at the factory, for more information please contact your local sales network.

# IS2 Enclosures

## Ordering codes - Completion of structures

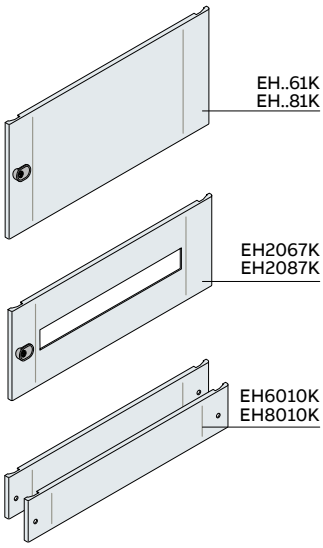


### Configuration with compartments

**Front panels for compartments**

Made of 2,00mm complete with box with double tongue key interchangeable with inserts (see page 2-108). The front panels are fitted with a horizontal profile which keeps the IP41 degree of protection.

| Description | Dimensions (mm) H | W | Code | Custom Made Service | Package/ No. of pieces |
|---|---|---|---|---|---|
| Panels for compartment cubicle | 200 | 600 | EH2061K | ✓ | 1/1 |
| Panels for compartment cubicle | 300 | | EH3061K | ✓ | 1/1 |
| Panels for compartment cubicle | 400 | | EH4061K | ✓ | 1/1 |
| Panels for compartment cubicle | 500 | | EH5061K | ✓ | 1/1 |
| Panels for compartment cubicle | 600 | | EH6061K | ✓ | 1/1 |
| Panels for compartment cubicle | 800 | | EH8062K | ✓ | 1/1 |
| Panels for compartment cubicle | 1000 | | EH1061K | ✓ | 1/1 |
| Panels for compartment cubicle | 200 | 800 | EH2081K | ✓ | 1/1 |
| Panels for compartment cubicle | 300 | | EH3081K | ✓ | 1/1 |
| Panels for compartment cubicle | 400 | | EH4081K | ✓ | 1/1 |
| Panels for compartment cubicle | 500 | | EH5081K | ✓ | 1/1 |
| Panels for compartment cubicle | 600 | | EH6083K | ✓ | 1/1 |
| Panels for compartment cubicle | 800 | | EH8081K | ✓ | 1/1 |
| Panels for compartment cubicle | 1000 | | EH1081K | ✓ | 1/1 |
| No.2 compensation panels | | 600 | EH6010K [1] | | 1/2 |
| No.2 compensation panels | | 800 | EH8010K [1] | | 1/2 |
| Single front panel for compartment cubicle with DIN rail (18 mod.DIN) | | 600 | EH2067K | | 1/1 |
| Single front panel for compartment cubicle with DIN rail (29 mod.DIN) | | 800 | EH2087K | | 1/1 |

[1] Service only valid for factory pre-assembled enclosure
Examples of configuration and technical characteristics at page 2-120.

✓ The "Custom Made Service" is valid only for structures assembled at the factory, for more information please contact your local sales network.

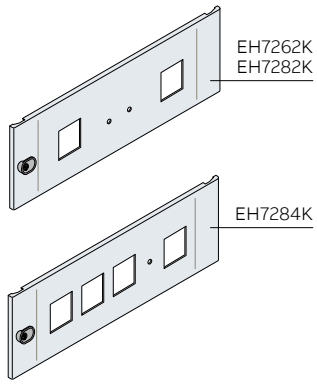


**Panels for square measuring instruments**

Made of 2,00mm painted steel colour RAL 7035, complete with box with double tongue key interchangeable with inserts (see page 2-108).

| Description | Dimensions (mm) H | W | Code | Package/ No. of pieces |
|---|---|---|---|---|
| No.2 72x72mm instrument panels for compartments | 200 | 600 | EH7262K | 1/1 |
| No.2 72x72mm instrument panels for compartments | 200 | 800 | EH7282K | 1/1 |
| No.2 72x72mm instrument panels for compartments | 200 | 800 | EH7284K | 1/1 |

Examples of configuration and technical characteristics at page 2-120.

# IS2 Enclosures

## Ordering codes - Completion of structures

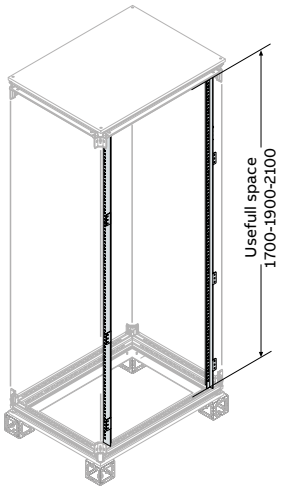


### Structures for modular apparatus

**Uprights for modular panels**

Uprights made of in galvanised steel drilled with 50mm pitch, preset for mounting apparatus holder blind plates, DIN rails and front panels. To be fixed onto the front uprights of the structure. The useful dimension is always 100mm less than the total height of the enclosure.

| Description | Dimensions (mm) H | No.DIN rows/centre dist. mm | Code | Package/ No. of pieces |
|---|---|---|---|---|
| No.2 uprights | 1400 | 6/200 o 8/150 | 1STQ005326B0000 | 1/1 |
| No.2 uprights | 1600 | 7/200 o 9/150 | 1STQ005327B0000 | 1/1 |
| No.2 uprights | 1800 | 8/200 o 11/150 | EH1800 | 1/1 |
| No.2 uprights | 2000 | 9/200 o 12/150 | EH2000 | 1/1 |
| No.2 uprights | 2200 | 10/200 o 14/150 | EH2200 | 1/1 |

Examples of configuration and technical characteristics at page 2-122.

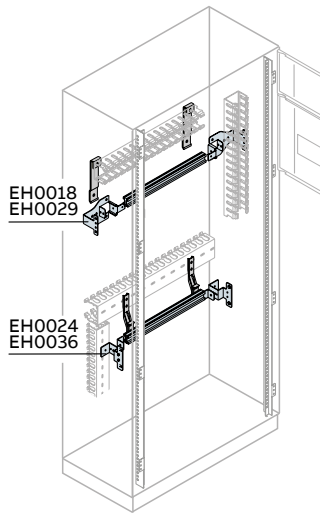


**DIN rail Kit with front wiring duct**

Kit consisting of double aluminium section (DIN 35), complete with shaped brackets for front fixing of the wiring duct (max. 60x80mm). It is fixed directly onto the uprights EH1800, EH2000 or EH2200. The useful dimension is always 100mm less than the total height of the enclosure.

| Description | Dimensions (mm) H | Code | Package/ No. of pieces |
|---|---|---|---|
| DIN rail and fixing supports (18 DIN mod.) | 600 | EH0018 | 1/1 |
| DIN rail and fixing supports (29 DIN mod.) | 800 | EH0029 | 1/1 |

**DIN rail Kit with rear wiring duct**

Kit consisting of double aluminium section (DIN 35), complete with shaped brackets for rear fixing of the wiring duct (W≥40mm) and total exploitation of the space for apparatus. It is fixed directly onto the uprights EH1800, EH2000 or EH2200. The useful dimension is always 100mm less than the total height of the enclosure.

| Description | Dimensions (mm) W | Code | Package/ No. of pieces |
|---|---|---|---|
| DIN rail and fixing supports (24 DIN mod.) | 600 | EH0024 | 1/1 |
| DIN rail and fixing supports (36 DIN mod.) | 800 | EH0036 | 1/1 |

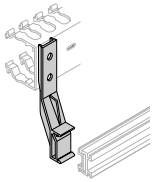
AD1009

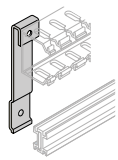
AD1037

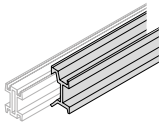
AP6000

**Accessories for DIN rail**

| Description | Code | Package/ No. of pieces |
|---|---|---|
| No. 4 plastic supports for horizontal wiring ducts | AD1009 | 1/4 |
| No. 4 metal supports for horizontal wiring ducts | AD1037 | 1/4 |
| No.1 depth adapter W=600mm | AP6000 | 1/4 |

# IS2 Enclosures

## Ordering codes - Completion of structures

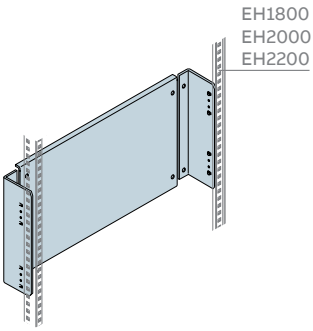


### Structures for modular apparatus

**Blind apparatus holder back plates**

Blind apparatus holder back plate, 1,5mm thickness. It is fixed directly onto the uprights EH1800, EHD2000, EH2200. The useful dimension is always 100mm less than the total height of the enclosure.

| Description | Dimensions (mm) H | W | Code | Package/ No. of pieces |
|---|---|---|---|---|
| Blind apparatus holder back plate | 200 | 600 | EH2065 | 1/1 |
| Blind apparatus holder back plate | 300 | | EH3065 | 1/1 |
| Blind apparatus holder back plate | 400 | | EH4065 | 1/1 |
| Blind apparatus holder back plate | 200 | 800 | EH2085 | 1/1 |
| Blind apparatus holder back plate | 300 | | EH3085 | 1/1 |
| Blind apparatus holder back plate | 400 | | EH4085 | 1/1 |

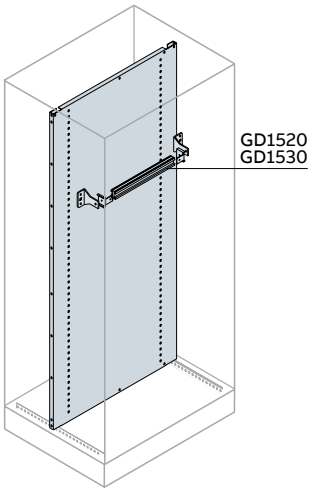


**DIN rail Kit on back plate (bench cabling)**

Kit consisting of double aluminium section (DIN 35), complete with shaped brackets for fixing the wiring duct Kit. The useful dimension is always 100mm less than the total height of the enclosure.

| Description | Dimensions (mm) W | Code | Package/ No. of pieces |
|---|---|---|---|
| DIN rail and fixing supports (24 DIN mod.) | 600 | GD1520 | 1/1 |
| DIN rail and fixing supports (36 DIN mod.) | 800 | GD1530 | 1/1 |

For all the components which cannot be mounted on DIN rails, e.g. T3, T4, OT and OETL, mounting is made directly on a plate.

**Back plate for bench cabling**

Back plate drilled with 25mm pitch for direct fixing of the GD1520, GD1530 DIN rails. Insertion takes place from the front of the enclosure and the position in depth is also adjustable at a pitch of 25mm. The centre distance between the DIN rails can be either 150 or 200mm. This solution is completed with the front panels with 24 and 36 modules for W=600mm and 800mm respectively.

| Description | Dimensions (mm) H | W | Code | Package/ No. of pieces |
|---|---|---|---|---|
| Back plate for bench cabling | 1800 | 600 | EX1860 | 1/1 |
| Back plate for bench cabling | 2000 | | EX2060 | 1/1 |
| Back plate for bench cabling | 2200 | | EX2260 | 1/1 |
| Back plate for bench cabling | 1800 | 800 | EX1880 | 1/1 |
| Back plate for bench cabling | 2000 | | EX2080 | 1/1 |
| Back plate for bench cabling | 2200 | | EX2280 | 1/1 |

• Quick selection table 2–6 • In-depth technical information page 4–1 • Overall dimensions page 5–1

# IS2 Enclosures

## Ordering codes - Completion of structures

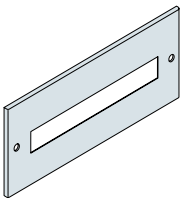

EH1518K-EH2018K-EH1529K
EH2029K-EH1524K-EH2024K
EH1536K-EH2036K

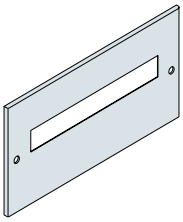

EH3018K-EH3029K

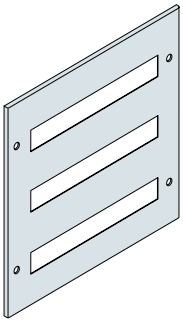

EH6018K-EH6029K-EH6025K
EH6036K

### Structures for modular apparatus

**Panels for modular apparatus**

Panel with modular cut-out in sheet 1,2mm (W=600mm) painted RAL7035 colour with quick fixing, suitable for hinges EH1889 (accessory). The useful dimension of the enclosure is always 100mm less than the total height of the enclosure.

| Description | Dimensions (mm) H | W | Code | Package/ No. of pieces |
|---|---|---|---|---|
| Panel 18 DIN mod. | 150 | 600 | EH1518K | 1/1 |
| Panel 18 DIN mod. | 200 | 600 | EH2018K | 1/1 |
| Panel 18 DIN mod. off-centre | 300 | 600 | EH3018K | 1/1 |
| Panel 54 DIN mod. (3 rows x 18 DIN mod.) | 600 | 600 | EH6018K | 1/1 |
| Panel 29 DIN mod. | 150 | 800 | EH1529K | 1/1 |
| Panel 29 DIN mod. | 200 | 800 | EH2029K | 1/1 |
| Panel 29 DIN mod. off-centre | 300 | 800 | EH3029K | 1/1 |
| Panel 87 DIN mod. (3 rows x 29 DIN mod.) | 600 | 800 | EH6029K | 1/1 |
| Panel 24 DIN mod. | 150 | 600 | EH1524K | 1/1 |
| Panel 24 DIN mod. | 200 | 600 | EH2024K | 1/1 |
| Panel 72 DIN mod. (3 rows x 24 DIN mod.) | 600 | 600 | EH6025K | 1/1 |
| Panel 36 DIN mod. | 150 | 800 | EH1536K | 1/1 |
| Panel 36 DIN mod. | 200 | 800 | EH2036K | 1/1 |
| Panel 108 DIN mod. (3 rows x 36 DIN mod.) | 600 | 800 | EH6036K | 1/1 |

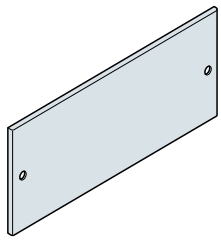

**Blind panels for apparatus**

Blind panel in 1,2mm (W=600mm) painted RAL7035 colour with quick fixing, suitable for hinges EH1889 (accessory). The useful dimension of the enclosure is always 100mm less than the total height of the enclosure.

| Description | Dimensions (mm) H | W | Code | Package/ No. of pieces |
|---|---|---|---|---|
| Blind panel | 50 | 600 | EH0562K | 1/1 |
| Blind panel | 100 | | EH1062K | 1/1 |
| Blind panel | 150 | | EH1562K | 1/1 |
| Blind panel | 200 | | EH2062K | 1/1 |
| Blind panel | 300 | | EH3063K | 1/1 |
| Blind panel | 400 | | EH4062K | 1/1 |
| Blind panel | 500 | | EH5062K | 1/1 |
| Blind panel | 600 | | EH6062K | 1/1 |
| Blind panel | 50 | 800 | EH0582K | 1/1 |
| Blind panel | 100 | | EH1082K | 1/1 |
| Blind panel | 150 | | EH1582K | 1/1 |
| Blind panel | 200 | | EH2082K | 1/1 |
| Blind panel | 300 | | EH3082K | 1/1 |
| Blind panel | 400 | | EH4082K | 1/1 |
| Blind panel | 500 | | EH5082K | 1/1 |
| Blind panel | 600 | | EH6082K | 1/1 |

• Quick selection table 2–6 • In-depth technical information page 4–1 • Overall dimensions page 5–1

# IS2 Enclosures

## Ordering codes - Completion of structures

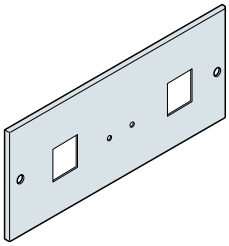

EH2272K-EH2297K-EH3272K
EH3296K

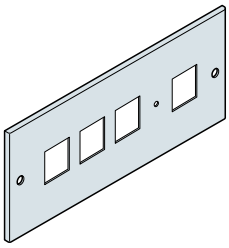

EH2472K-EH3472K-EH3496K

### Structures for modular apparatus

**Panel for square measuring instruments**

Panel with cut-outs for measuring instruments made of 1,2mm sheet painted RAL7035 colour with quick fixing, suitable for hinges EH1889 (accessory). The useful dimension of the enclosures is always 100mm less than the total height of the enclosures.

| Description | Dimensions (mm) H | W | Code | Package/ No. of pieces |
|---|---|---|---|---|
| Panel No. 2 instruments 72x72mm | 200 | 600 | EH2272K | 1/1 |
| Panel No. 4 instruments 72x72mm | 200 | | EH2472K | 1/1 |
| Panel No. 2 instruments 96x96mm | 200 | | EH2297K | 1/1 |
| Panel No. 2 instruments 72x72mm | 200 | 800 | EH3272K | 1/1 |
| Panel No. 2 instruments 96x96mm | 200 | | EH3296K | 1/1 |
| Panel No. 2 instruments 72x72mm | 200 | | EH3472K | 1/1 |
| Panel No. 2 instruments 96x96mm | 200 | | EH3496K | 1/1 |

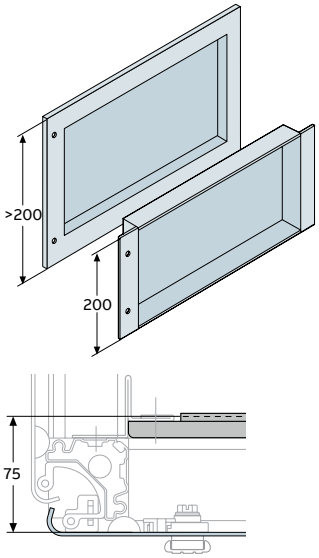


**Blind panels for apparatus**

Blind panel in sheet 1,2mm (W=600mm) painted RAL7035 colour with quick fixing, suitable for EH1889 higes (accessory). The useful dimension of the enclosure is always 100mm less than the total height of the enclosure.

| Description | Dimensions (mm) H | W | Code | Package/ No. of pieces |
|---|---|---|---|---|
| Recessed blind panel | 200 | 600 | EH2063K | 1/1 |
| Recessed blind panel | | 800 | EH2083K | 1/1 |
| Recessed blind panel | 300 | 600 | EH3064K | 1/1 |
| Recessed blind panel | | 800 | EH3083K | 1/1 |
| Recessed blind panel | 400 | 600 | EH4064K | 1/1 |
| Recessed blind panel | | 800 | EH4083K | 1/1 |
| Recessed blind panel | 500 | 600 | EH5063K | 1/1 |
| Recessed blind panel | | 800 | EH5084K | 1/1 |
| Recessed blind panel | 600 | 600 | EH6063K | 1/1 |
| Recessed blind panel | | 800 | EH6084K | 1/1 |

The panels with a height of 200 or 300mm, can be used for fixed Tmax XT1-XT2-XT3 with front terminals with direct rotary handle operating mechanism, where the panels with a height of 400-500-600mm can be used for OT switchdisconnectors from 1000 to 1600 A.

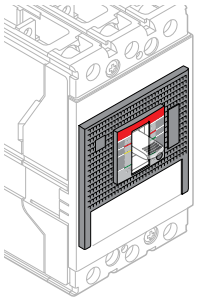

AD3301
AD3302
AD3303
AD3304

**Polished flange for DIN-Rail mounting**

| Description | Code | Package/ No. of pieces |
|---|---|---|
| Polished flange for XT1 3P mounted on DIN rail | AD3301 | 1/1 |
| Polished flange for XT1 4P mounted on DIN rail | AD3302 | 1/1 |
| Polished flange for XT3 3P mounted on DIN rail | AD3303 | 1/1 |
| Polished flange for XT3 4P mounted on DIN rail | AD3304 | 1/1 |

Already supplied in the DIN-Rail mounting kit for breakers in MCCBs catalogue

• Quick selection table 2–6 • In-depth technical information page 4–1 • Overall dimensions page 5–1

# IS2 Enclosures

## Ordering codes - Completion of structures

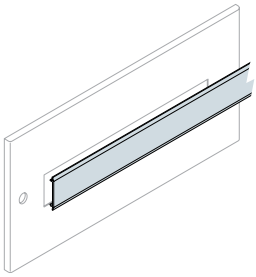



EV1137

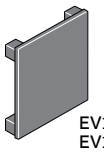

EV1135
EV1136

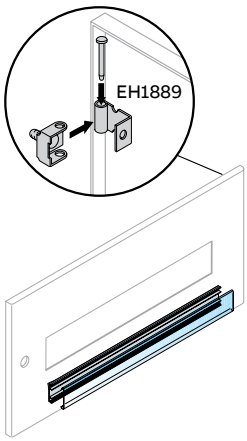


AD1101-AD1102
AD1103-AD1104

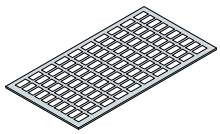

EH2118-EH2129
AD1600-AD1800

### Structures for modular apparatus

**Accessoris for modular panel**

| Description | Code | Package/ No. of pieces |
|---|---|---|
| **Hole covering strip RAL7035 colour** | | |
| No.10 hole covers W=2000mm, grey | AD1086 | 1/10 |
| No.3 hole covers 24 DIN modules W=600mm | AD1088 | 1/3 |
| No.3 hole covers 36 DIN modules W=800mm | AD1089 | 1/3 |
| **Closing plug for instrument holder panels** | | |
| No.10 closing plug for instrument holder panels 72x72mm | EV1135 | 1/10 |
| No.5 closing plug for instrument holder panels 96x96mm | EV1136 | 1/5 |
| No.50 tappi di chiusura per pulsanti Ø22mm | EV1137 | 1/50 |
| **Adhesive name label holders** | | |
| No. 20 label holders 18 DIN mod - Lenght 325mm | EH2118 | 1/20 |
| No. 20 label holders 29 DIN mod- Lenght 525mm | EH2129 | 1/20 |
| No. 20 label holders 24 DIN mod- Lenght 432mm | AD1600 | 1/20 |
| No. 20 label holders 36 DIN mod- Lenght 634mm | AD1800 | 1/20 |
| **Labels can be written using compatible Grafoplast system** | | |
| No. 288 labels 1 DIN mod. | AD1101 | 1/288 |
| No. 192 labels 2 DIN mod. | AD1102 | 1/192 |
| No. 96 labels 3 DIN mod. | AD1103 | 1/96 |
| No. 96 labels 4 DIN mod. | AD1104 | 1/96 |
| **Hinges and quick closures for panels** | | |
| No. 10 hinges for panels | EH1889 [1] | 1/10 |
| No. 5 quick closures for front panels | EH1890 | 1/5 |

[1] Use No.2 hinges for panel H=150/200/300/400mm, No.3 hinges for panel H=500/600mm.

• Quick selection table 2–6 • In-depth technical information page 4–1 • Overall dimensions page 5–1

# IS2 Enclosures

## Ordering codes - Completion of structures

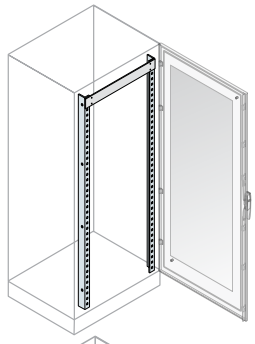

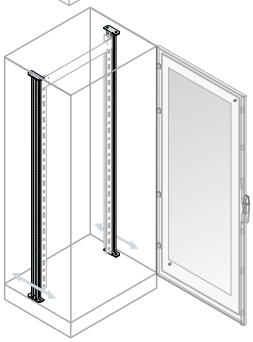

### 19” rack structure

**19” rack structure**

The 19” uprights “L” shaped are made of 2,00mm galvanized steel. No.1 compensation panel included.

| Description | No. HE | Dimensions (mm) H | W | Code | Custom Made Service | Package/ No. of pieces |
|---|---|---|---|---|---|---|
| **“L” shaped uprights for 19” fixed frame** | | | | | | |
| No.2 “L” shaped | 38 | 1800 | 600 | EG1800 | ✓ | 1/2 |
| No.2 “L” shaped | 42 | 2000 | | EG2000 | ✓ | 1/2 |
| No.2 “L” shaped | 47 | 2200 | | EG2200 | ✓ | 1/2 |
| No.2 “L” shaped | 38 | 1800 | 800 | EG1880 | | 1/2 |
| No.2 “L” shaped | 42 | 2000 | | EG2080 | | 1/2 |
| No.2 “L” shaped | 47 | 2200 | | EG2280 | | 1/2 |
| **Upright for depth adjustment of the fixed rack frame “L” shaped (25mm pitch)** | | | | | | |
| No.2 uprights for depth adjustment of the fixed rack frame | | 1800 | | EM1804 | | 1/2 |
| No.2 uprights for depth adjustment of the fixed rack frame | | 2000 | | EM2004 | | 1/2 |
| No.2 uprights for depth adjustment of the fixed rack frame | | 2200 | | EM2204 | | 1/2 |

Examples of configuration and technical characteristics at page 2-124

✓ The “Custom Made Service” is valid only for structures assembled at the factory, for more information please contact your local sales network.

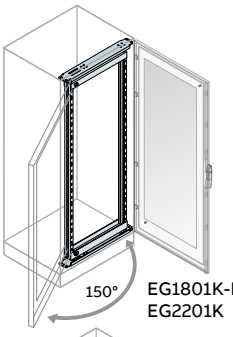


EG1801K-EG2001K
EG2201K

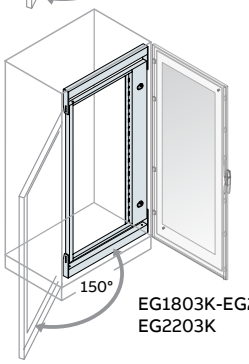


EG1803K-EG2003K
EG2203K

**19” Swing rack frame**

The centred and decentralized swing frames are made of 2,00mm galvanised steel painted RAL 7035 and are complete with handle and lock with double tongue key.

| Description | No. HE | Dimensions (mm) H | W | Code | Custom Made Service | Package/ No. of pieces |
|---|---|---|---|---|---|---|
| Centred swing rack frame | 36 | 1800 | 600 | EG1801K | ✓ | 1/1 |
| Centred swing rack frame | 40 | 2000 | | EG2001K | ✓ | 1/1 |
| Centred swing rack frame | 45 | 2200 | | EG2201K | ✓ | 1/1 |
| Decentralized swing rack frame | 33 | 1800 | 800 | EG1803K | ✓ | 1/1 |
| Decentralized swing rack frame | 38 | 2000 | | EG2003K | ✓ | 1/1 |
| Decentralized swing rack frame | 42 | 2200 | | EG2203K | ✓ | 1/1 |

✓ The “Custom Made Service” is valid only for structures assembled at the factory, for more information please contact your local sales network.

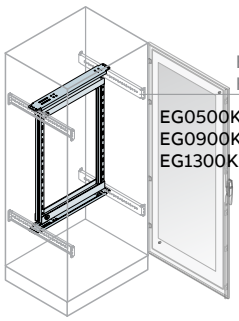


EG0500K
EG0900K
EG1300K

**Partial swing rack frame**

| Description | No. HE | Dimensions (mm) H | W | Code | Package/ No. of pieces |
|---|---|---|---|---|---|
| Partial swing rack frame 19” | | 500 | 600 | EG0500K | 1/1 |
| Partial swing rack frame 19” | | 900 | | EG0900K | 1/1 |
| Partial swing rack frame 19” | | 1300 | | EG1300K | 1/1 |

# IS2 Enclosures

## Ordering codes - Completion of structures

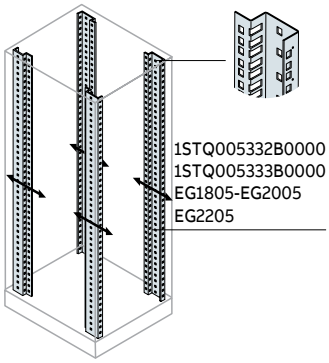


### 19” rack structure

**19” cranked shaped uprights**

Cranked shaped uprights are made of 2,00mm galvanized steel sheet and are fixed by brackets or crosspieces and are adjustable in depth (25mm pitch).

| Description | No. HE | Dimensions (mm) H | Code | Package/ No. of pieces |
|---|---|---|---|---|
| No.2 19” cranked shaped uprights | 32 | 1400 | 1STQ005332B0000 | 1/2 |
| No.2 19” cranked shaped uprights | 36 | 1600 | 1STQ005333B0000 | 1/2 |
| No.2 19” cranked shaped uprights | 40 | 1800 | EG1805 | 1/2 |
| No.2 19” cranked shaped uprights | 44 | 2000 | EG2005 | 1/2 |
| No.2 19” cranked shaped uprights | 49 | 2200 | EG2205 | 1/2 |

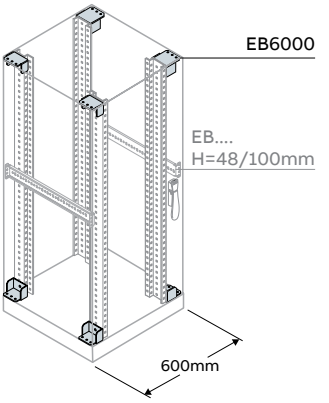


**Brackets for fixing 19” cranked shaped uprights (top bottom position)**

| Description | Dimensions (mm) W | Code | Package/ No. of pieces |
|---|---|---|---|
| No.4 brackets for fixing total/partial cranked shaped uprights | 600 | EB6000 [1] | 1/4 |
| No.4 brackets for fixing total/partial cranked shaped uprights | 800 | EB8000 | 1/4 |

[1] In enclosures 600 mm wide, the cranked shaped rack uprights can be fixed in the middle height of the enclosures by means of standard crosspieces EB.... see page 2-65.

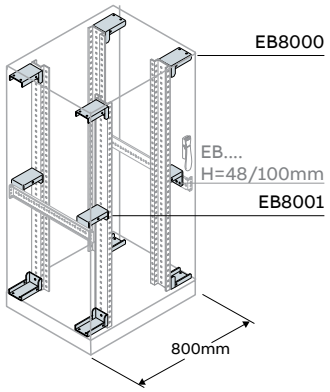


**Brackets for fixing 19” cranked shaped uprights (intermediate position)**

| Description | Dimensions (mm) W | Code | Package/ No. of pieces |
|---|---|---|---|
| No.2 intermediate brackets for fixing total/partial cranked shaped uprights | 600/800 | EB8001 [1] | 1/2 |

[1] To be combined with the standard cross EB.... see page 2-70.

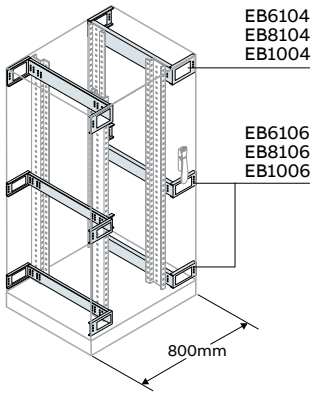


**Crosspieces for fixing 19” cranked shaped uprights**

| Description | Dimensions (mm) W | D | Code | Package/ No. of pieces |
|---|---|---|---|---|
| No.2 top crosspieces | 800 | 600 | EB6104 | 1/2 |
| No.2 top crosspieces | | 800 | EB8104 | 1/2 |
| No.2 top crosspieces | | 1000 | EB1004 | 1/2 |
| No.2 central/bottom crosspieces | | 600 | EB6106 | 1/2 |
| No.2 central/bottom crosspieces | | 800 | EB8106 | 1/2 |
| No.2 central/bottom crosspieces | | 1000 | EB1006 | 1/2 |

# IS2 Enclosures

## Ordering codes - Completion of structures

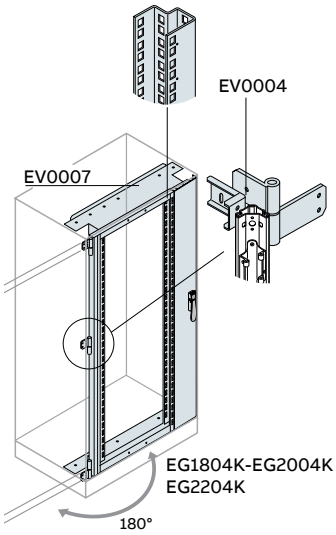


### 19” rack structure

**19” Swing rack frame with “C” shaped profile**

The decentralized swing frames are made of 2,00mm galvanised steel painted RAL 7035 and are complete with handle and lock with double tongue key. EV0007 assembling kit to be used in order to mount the frame.

| Description | No. HE | Dimensions (mm) H | W | Code | Package/ No. of pieces |
|---|---|---|---|---|---|
| Swing “C” shaped rack frame | 36 | 1800 | 800 | EG1804K | 1/1 |
| Swing “C” shaped rack frame | 41 | 2000 | | EG2004K | 1/1 |
| Swing “C” shaped rack frame | 45 | 2200 | | EG2204K | 1/1 |
| 180° opening hinge for swing rack frame and braket | | | | EV0004 | 1/1 |
| kit for fixing swing rack frame “C” shaped | | | | EV0007 (1) | 1/1 |

(1) To be ordered always with new off-center swing rack frame with “C” shaped uprights EG1804K, EG2004K, EG2204K..

### Screws and nuts parts

| Description | Code | Package/ No. of pieces |
|---|---|---|
| No.50 screws M6 x 13mm cross rounded head | EV6130 | 1/50 |
| No.50 cage nut M6 for square hole 9,2 x 9,2mm | EV6131 | 1/50 |
| No.20 cage nut M5 for square hole 9,2 x 9,2mm | EV0102 | 1/50 |
| No.20 Torx M5 screws with nylon washer L=16mm | EV0103 | 1/20 |
| No.20 Torx M6 screws with nylon washer L=16mm | EV0104 | 1/20 |

• Quick selection table 2–6 • In-depth technical information page 4–1 • Overall dimensions page 5–1

# IS2 Enclosures

## Ordering codes - Completion of structures

EG1500K-EG1900K-EG1130K

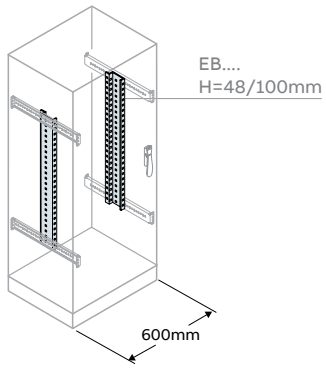


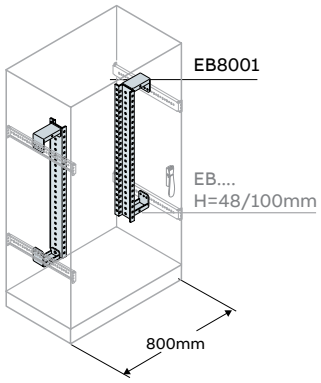


### 19” rack structure

**Partial 19” cranked shaped uprights**

| Description | No. HE | Dimensions (mm) H | W | Code | Package/ No. of pieces |
|---|---|---|---|---|---|
| Partial shaped uprights | 9 | 500 | 600/ 800 | EG1500K [1] | 1/1 |
| Partial shaped uprights | 18 | 900 | | EG1900K [1] | 1/1 |
| Partial shaped uprights | 27 | 1300 | | EG1130K [1] | 1/1 |
| No.2 brackets for fixing total/partial cranked shaped uprights | | | 800 | EB8001 [2] | 1/2 |

[1] In enclosures 600 mm wide, the cranked shaped rack uprights can be fixed in the middle height of the enclosures by means of standard crosspieces EB.... see page 2-70.

[2] To be combined with the standard cross EB.... see page 2-70.

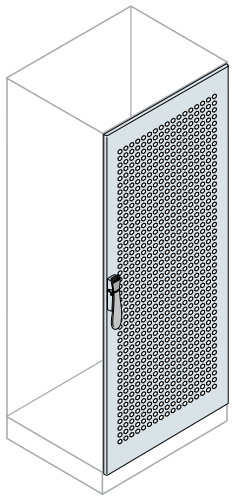

**Aerated door IP20**

Aerated door made of RAL 7035 colour 1,2mm thick sheet, fitted with polyurethane gasket, complete with handle with double tongue key (interchangeable with other types of inserts, see pag. 5-104). Reversible (hinged on the right as standard) with 4 closing points and complete with internal reinforcement frame and earthing pins.

| Description | Dimensions (mm) H | W | Code | Package/ No. of pieces |
|---|---|---|---|---|
| Aerated door for server cabinet | 1800 | 800 | EC1882 | 1/1 |
| Aerated door for server cabinet | 2000 | | EC2082 | 1/1 |
| Aerated door for server cabinet | 2200 | | EC2282 | 1/1 |
| Aerated door for server cabinet with 180° opening | 1800 | 800 | EC1884 | 1/1 |
| Aerated door for server cabinet with 180° opening | 2000 | | EC2084 | 1/1 |
| Aerated door for server cabinet with 180° opening | 2200 | | EC2284 | 1/1 |

# IS2 Enclosures

## Ordering codes - Completion of structures

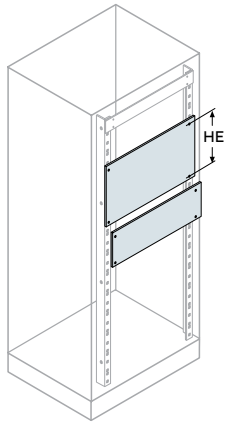


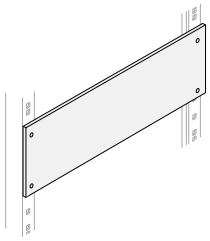

### Equipment for 19” rack frame

**Panel for 19” rack frames aluminium**

Panels made of 3,00 Aluminium

| Description | No. HE | Dimensions (mm) H | Code | Package/ No. of pieces |
|---|---|---|---|---|
| Blind aluminium panel | 1HE | 44,45 | EG1991 | 1/1 |
| Blind aluminium panel | 2HE | 89 | EG1902 | 1/1 |
| Blind aluminium panel | 3HE | 133 | EG1903 | 1/1 |
| Blind aluminium panel | 4HE | 177,5 | EG1904 | 1/1 |
| Blind aluminium panel | 5HE | 222 | EG1905 | 1/1 |
| Blind aluminium panel | 6HE | 266,5 | EG1906 | 1/1 |
| Blind aluminium panel | 7HE | 311 | EG1907 | 1/1 |
| Blind aluminium panel | 8HE | 355,5 | EG1908 | 1/1 |
| Blind aluminium panel | 9HE | 400 | EG1909 | 1/1 |
| Blind aluminium panel | 10HE | 444,5 | EG1910 | 1/1 |
| Blind aluminium panel | 11HE | 488 | EG1911 | 1/1 |
| Blind aluminium panel | 12HE | 533 | EG1912 | 1/1 |
| Blind aluminium panel | 13HE | 577,5 | EG1913 | 1/1 |
| Blind aluminium panel | 14HE | 622 | EG1914 | 1/1 |
| Blind aluminium panel | 15HE | 666 | EG1915 | 1/1 |
| Blind aluminium panel | 16HE | 711 | EG1916 | 1/1 |
| Blind aluminium panel | 17HE | 755,5 | EG1917 | 1/1 |
| Blind aluminium panel | 18HE | 800 | EG1918 | 1/1 |
| Blind aluminium panel | 19HE | 844,5 | EG1999 | 1/1 |
| Blind aluminium panel | 20HE | 889 | EG1920 | 1/1 |

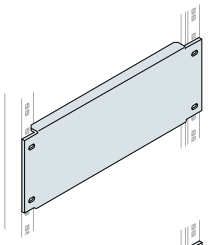

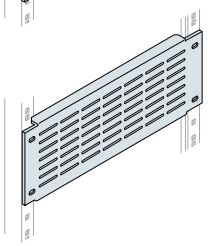

**Blind and aerated panel in steel sheet 1,5mm for 19” rack frame RAL 7035**

| Description | No. HE | Dimensions (mm) H | Code | Package/ No. of pieces |
|---|---|---|---|---|
| Blind panel RAL 7035 | 1HE | 44,45 | EG0119 | 1/1 |
| Blind panel RAL 7035 | 2HE | 89 | EG0219 | 1/1 |
| Blind panel RAL 7035 | 3HE | 133 | EG0319 | 1/1 |
| Blind panel RAL 7035 | 4HE | 177,5 | EG0419 | 1/1 |
| Blind panel RAL 7035 | 5HE | 222 | EG0519 | 1/1 |
| Blind panel RAL 7035 | 6HE | 266,5 | EG0619 | 1/1 |
| Blind panel RAL 7035 | 7HE | 311 | EG0719 | 1/1 |
| Blind panel RAL 7035 | 9HE | 400 | EG0919 | 1/1 |
| Blind panel RAL 7035 | 10HE | 444,5 | EG1019 | 1/1 |
| Blind panel RAL 7035 | 12HE | 533 | EG1219 | 1/1 |
| Blind panel RAL 7035 | 14HE | 622 | EG1419 | 1/1 |
| Blind panel RAL 7035 | 15HE | 666 | EG1519 | 1/1 |
| Blind panel RAL 7035 | 16HE | 711 | EG1619 | 1/1 |
| Blind panel RAL 7035 | 18HE | 800 | EG1819 | 1/1 |
| Blind panel RAL 7035 | 20HE | 889 | EG2019 | 1/1 |
| Aerated panel RAL 7035 | 1HE | 44,45 | EH1991 | 1/1 |
| Aerated panel RAL 7035 | 2HE | 89 | EH1992 | 1/1 |
| Aerated panel RAL 7035 | 3HE | 133 | EH1993 | 1/1 |

• Quick selection table 2–6 • In-depth technical information page 4–1 • Overall dimensions page 5–1

# IS2 Enclosures

## Ordering codes - Completion of structures

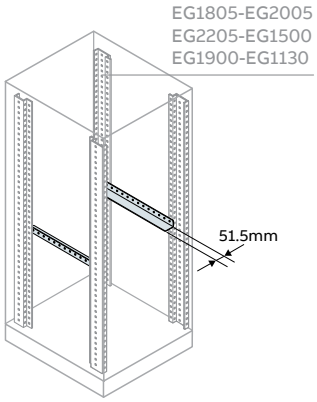


### Equipment for 19” rack frame

**“L” shaped accessories support for 19” cranked shaped upright**

“L” shaped accessories support couple in galvanized sheet 2,00mm, fixing at 25mm pitch in depth on front and rear uprights..

| Description | D (mm) Structure | Code | Package/ No. of pieces |
|---|---|---|---|
| “L” support couple - W=500mm | 600 | EV0020 | 1/1 |
| “L” support couple - W=600mm | 800 | EV0021 | 1/1 |
| “L” support couple - W=800mm | 1000 | EV0022 | 1/1 |

Accessories compatible with: rack 19” cranked shaped uprights, off-center swing rack frame with “C” shaped uprights and partial 19” cranked shaped uprights.

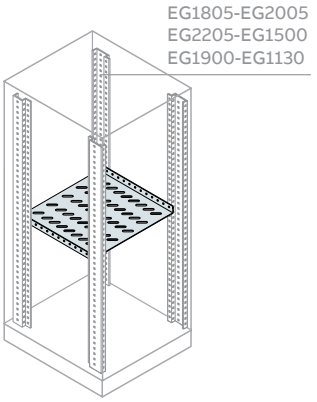


**Universal shelves for 19” cranked shaped uprights**

Universal shelves in galvanized sheet 2,00mm, fixing at 25mm pitch in depth. Mounting on front and rear uprights.

| Description | D (mm) Structure | Code | Package/ No. of pieces |
|---|---|---|---|
| Universal fixed shelf- 450x400mm (WxD) | 600 | EV0400 | 1/1 |
| Universal fixed shelf- 450x600mm (WxD) | 800 | EV0600 | 1/1 |
| Universal fixed shelf- 450x800mm (WxD) | 1000 | EV0800 | 1/1 |

Accessories compatible with: rack 19” cranked shaped uprights, off-center swing rack frame with “C” shaped uprights and partial 19” cranked shaped uprights.

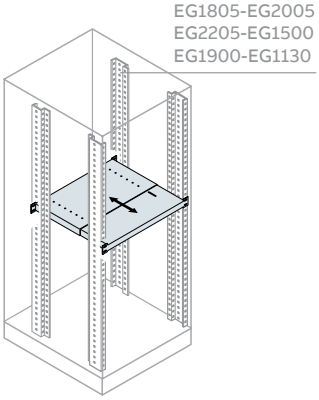


**Adjustable in depth shelf for 19” cranked shaped uprights**

Adjustable in depth shelf 1 HE in galvanized sheet 2,00mm, RAL 7035. Mounting on front and rear uprights.

| Description | Dimensions (mm) W | D | Code | Package/ No. of pieces |
|---|---|---|---|---|
| Adjustable in depth shelf 1HE (distance between fixing plans 440-665mm) | 450 | 450 | EV0041 | 1/1 |

Accessories compatible with: rack 19” cranked shaped uprights, off-center swing rack frame with “C” shaped uprights and partial 19” cranked shaped uprights.

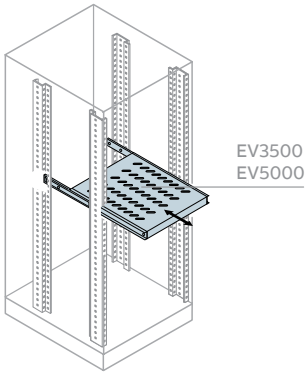


**Withdrawable shelves for cranked and “C” shaped uprights profile**

Withdrawable shelves for equipments. Fixing on the front and rear fixed uprights.

| Description | Dimensions (mm) D | Code | Package/ No. of pieces |
|---|---|---|---|
| Withdrawable shelf D=350mm with telescopic slides and 2HE fixing elements | 350 | EV3500* | 1/1 |
| Withdrawable shelf D=500mm with telescopic slides and 1HE fixing elements | 500 | EV5000** | 1/1 |

* For cranked shaped uprights and “C” shaped swing frame.

** Only for cranked shaped uprights.

• Quick selection table 2–6 • In-depth technical information page 4–1 • Overall dimensions page 5–1

# IS2 Enclosures

## Ordering codes - Completion of structures

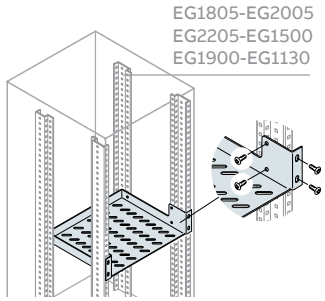


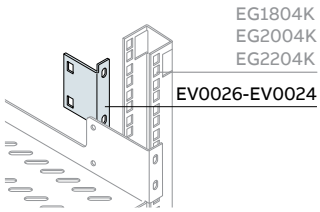


### Equipment for 19” rack frame

**Fixed shelf for apparatus**

Fixed shelves 2HE and 1HE to be mounted at the front (rear upright are not necessary, only for addictional fixing point) on 19” cranked shaped uprights and on “C” shaped swing frames with 2 adaptation brackets (EV0026/EV0024).

| Description | Dimensions (mm) D | Code | Package/ No. of pieces |
|---|---|---|---|
| 1 fixed shelf 1HE front/back | 385 | EV1385 | 1/1 |
| 1 fixed shelf 2HE front/back | 385 | EV2385 | 1/1 |
| No.2 brackets for 1HE shelf on “C” shaped swing frame | | EV0026 | 1/2 |
| No.2 brackets for 1HE shelf on “C” shaped swing frame | | EV0024 | 1/2 |

Accessories compatible with: rack 19” cranked shaped uprights, off-center swing rack frame with “C” shaped uprights and partial 19” cranked shaped uprights.

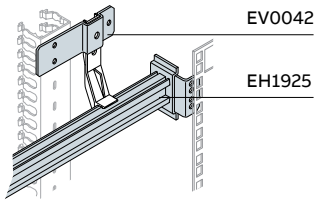


**DIN rail and support for cable duct**

DIN rail and support for cable duct for cranked shaped upright and on “C” shaped swing frame.

| Description | Code | Package/ No. of pieces |
|---|---|---|
| DIN rail for rack 19” frame 25 mod. and fixing brakets | EH1925 | 1/1 |
| Horizontal/vertical support for cable duct | EV0042 | 1/1 |

Accessories compatible with: rack 19” cranked shaped uprights, off-center swing rack frame with “C” shaped uprights and partial 19” cranked shaped uprights.

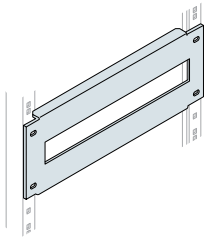

**Steel panels for modular apparatus 19” rack frame RAL 7035**

| Description | No. HE | Dimensions (mm) H | Code | Package/ No. of pieces |
|---|---|---|---|---|
| DIN panel | 3HE | 133 | EH0003 | 1/1 |
| DIN panel | 4HE | 177,5 | EH0004 | 1/1 |

Accessories compatible with: rack 19” cranked shaped uprights, off-center swing rack frame with “C” shaped uprights and partial 19” cranked shaped uprights.

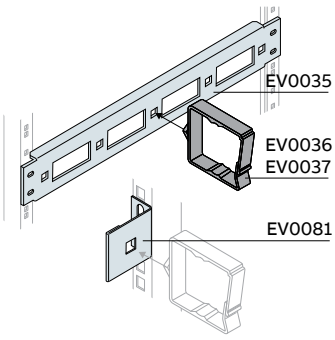


**Universal cable holder panel**

| Description | Code | Package/ No. of pieces |
|---|---|---|
| Cable holder panel 1 HE RAL 7035 | EV0035 | 1/1 |
| No.5 bracket for cable holder | EV0081 | 1/5 |
| No.5 cable holder D=28,5mm | EV0036 | 1/5 |
| No.5 cable holder D=55mm | EV0037 | 1/5 |

Accessories compatible with: rack 19” cranked shaped uprights, off-center swing rack frame with “C” shaped uprights and partial 19” cranked shaped uprights.

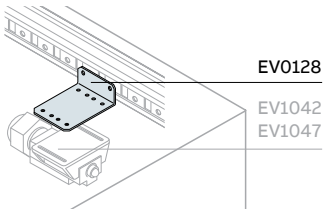


**Limit kit switch for swing frame**

| Description | Code | Package/ No. of pieces |
|---|---|---|
| Limit kit switch for swing frame | EV0128 | 1/1 |

• Quick selection table 2–6 • In-depth technical information page 4–1 • Overall dimensions page 5–1

# IS2 Enclosures

## Ordering codes - Completion of structures

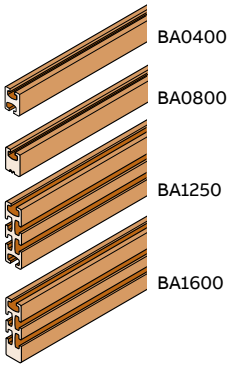


### Distribution and earthing system

**Distribution busbars with shaped section**

| Description | Lenght (mm) | Code | Package/ No. of pieces |
|---|---|---|---|
| Busbar In=400A | 1730 | BA0400 | 1/1 |
| Busbar In=800A | 1730 | BA0800 | 1/1 |
| Busbar In=1250A | 1730 | BA1250 | 1/1 |
| Busbar In=1600A | 1730 | BA1600 | 1/1 |

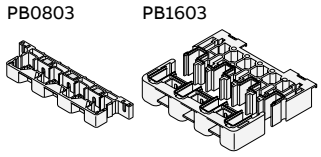


**Busbars holder for busbar with shaped section**

To be used with crosspieces H 48mm to be drilled (see page 2-63).

| Description | Code | Package/ No. of pieces |
|---|---|---|
| Linear busbar holder In=800A - 35kA | PB0803 | 1/1 |
| Linear busbar holder In=1600A - 65kA | PB1603 | 1/1 |

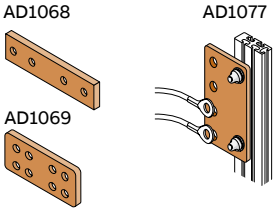


**Joints for busbars**

| Description | Code | Package/ No. of pieces |
|---|---|---|
| No.4 800A joints for busbars with shaped section (with 800/1250/1600A busbars) | AD1068 | 1/4 |
| No.4 1250/1600A joints for busbars with shaped section with 1250/1600A busbars) | AD1069 | 1/4 |
| No.4 copper 400A branch joints | AD1077 | 1/4 |

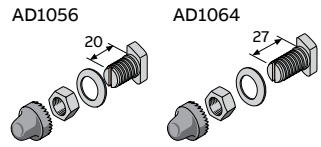


**Hammer seal screws**

| Description | Code | Package/ No. of pieces |
|---|---|---|
| No.12 screws M8 - W=20mm for cable terminal | AD1056 | 1/12 |
| No.12 screws M8 - W=27mm for flats up to 10 mm, complete with screwcovering cap | AD1064 | 1/12 |

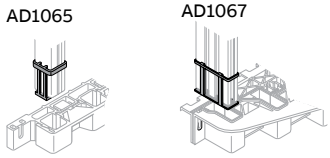


**Resting bases**

| Description | Code | Package/ No. of pieces |
|---|---|---|
| No.4 400/800A busbar resting bases | AD1065 | 1/4 |
| No.4 1250/1600A busbar resting bases | AD1067 | 1/4 |

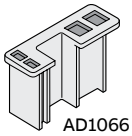


**Adapters for busbars**

| Description | Code | Package/ No. of pieces |
|---|---|---|
| No.4 adapters for busbars In =400/800A with busbar holder (PB1603) | AD1066 | 1/4 |

• Quick selection table 2–6 • In-depth technical information page 4–1 • Overall dimensions page 5–1

# IS2 Enclosures

## Ordering codes - Completion of structures

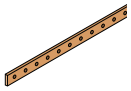
BR0250

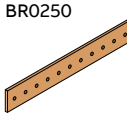
BR0400

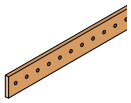
BR0630

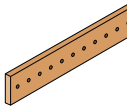
PBFC3205

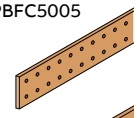
PBFC5005

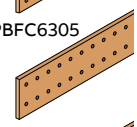
PBFC6305

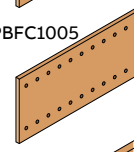
PBFC1005

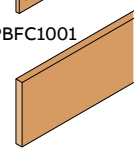
PBFC1001

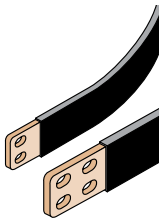
BF....

BR0630

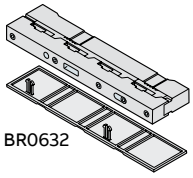
BR0632

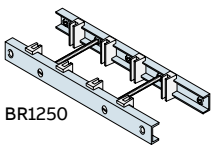
BR1250

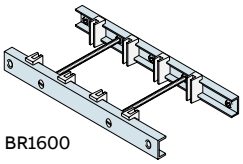
BR1600

### Distribution and earthing system

#### Flat busbars

| Description | Lenght (mm) | Code | Package/ No. of pieces |
|---|---|---|---|
| No.2 busbars In=250A section: 15x5mm | 1750 | BR0250 | 1/2 |
| No.2 busbars In=400A section: 25x5mm | 1750 | BR0400 | 1/2 |
| No.2 busbars In=630A section: 30x10mm | 1750 | BR0630 | 1/2 |
| No.1 busbars In=400A, section: 32x5mm | 1750 | PBFC3205 | 1/1 |
| No.1 busbars In=630A, section: 50x5mm | 1750 | PBFC5005 | 1/1 |
| No.1 busbars In=800A, section: 63x5mm | 1750 | PBFC6305 | 1/1 |
| No.1 busbars In=1250A, section: 100x5mm | 1750 | PBFC1005 | 1/1 |
| No.1 busbars In=1600A, section: 100x10mm | 1750 | PBFC1001 | 1/1 |

#### Flexible busbars

| Description | Lenght (mm) | Code | Package/ No. of pieces |
|---|---|---|---|
| No.2 flexible busbars, section 20x3 In=250A | 2000 | BF1602 | 1/2 |
| No.2 flexible busbars, section 20x5 In=400A | 2000 | BF2502 | 1/2 |
| No.2 flexible busbars, section 20x6 In=500A | 2000 | BF4002 | 1/2 |
| No.2 flexible busbars, section 32x5 In=630A | 2000 | BF4012 (1) | 1/2 |
| No.2 flexible busbars, section 40x8 In=1000A | 2000 | BF6302 | 1/2 |
| No.2 flexible busbars, section 50x10 In=1250A | 2000 | BF8002 | 1/2 |

(1) Only for circuit-breakers with extended front terminals or rear terminals.

#### Busbar holder

To use with crosspieces H=48mm to drill (see page 2-63)

| Description | Code | Package/ No. of pieces |
|---|---|---|
| No.2 linear busbar holders In=630A - 32kA | BP0630 | 1/2 |
| No.2 terminal covers for linear busbar holders BP0630 | BP0632 | 1/2 |
| No.2 busbar holder for busbars 5mm thickness | BP1250 | 1/2 |
| No.2 busbar holder for busbars 10mm thickness | BP1600 | 1/2 |

# IS2 Enclosures

## Ordering codes - Completion of structures

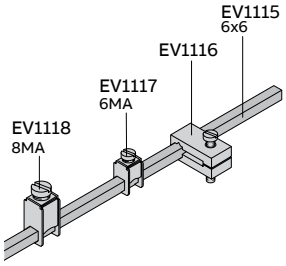


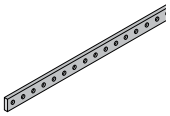

EV1119

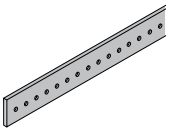

EV1120

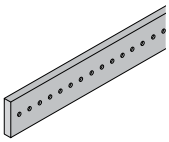

EV1121

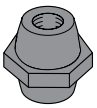

EV1122-EV1123

EV1124-EV1125

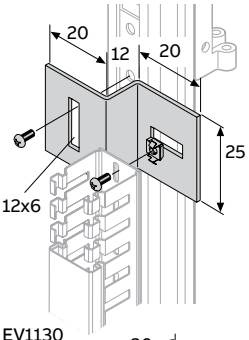


EV1130

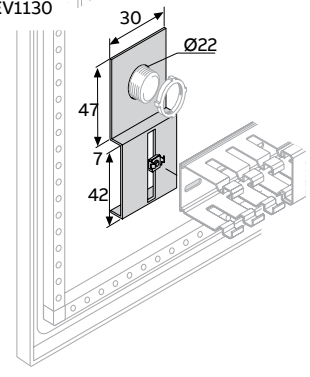


EV1131

### Distribution and earthing system

#### Cables for earthing

| Description | Dimensions (mm) H | L | Code | Package/ No. of pieces |
|---|---|---|---|---|
| No.5 earthing cables sect. 16mm | 17 | 200 | AA6840 | 1/5 |
| No.5 earthing cables sect. 16mm | 17 | 300 | AA6850 | 1/5 |
| No.5 earthing cables sect. 25mm | 22 | 200 | AA6880 | 1/5 |
| No.5 earthing cables sect. 25mm | 22 | 300 | AA6890 | 1/5 |

#### Neutral/earthing copper busbars

| Description | Code | Package/ No. of pieces |
|---|---|---|
| Neutral/earthing busbar 6x6mm W=2000mm | EV1115 | 1/1 |
| No. 50 insulators for neutral/ earthing busbar for EV1115 | EV1116 | 1/50 |
| No. 100 terminals for cable ø0.5-16mm2 for EV1115 | EV1117 | 1/100 |
| No. 100 terminals for cable ø4-35mm2 for EV1115 | EV1118 | 1/100 |
| No. 2 drilled and threaded 20x5mm busbars M6 W=2000mm | EV1119 | 1/2 |
| No. 2 drilled and threaded 25x5mm busbars M6 W=2000mm | EV1120 | 1/2 |
| No. 2 drilled and threaded 50x5mm busbars M6 W=2000mm | EV1121 | 1/2 |
| No.50 hexagonal insulators 30x30mm M6 | EV1122 | 1/50 |
| No.50 hexagonal insulators 30x30mm M8 | EV1123 | 1/50 |
| No.25 hexagonal insulators 36x50mm M6 | EV1124 | 1/25 |
| No.25 hexagonal insulators 36x50mm M8 | EV1125 | 1/25 |

#### Wiring duct support brackets

| Description | Code | Package/ No. of pieces |
|---|---|---|
| No. 100 wiring duct support brackets on upright structure | EV1130 | 1/100 |
| No. 100 wiring duct support brackets on pushbuttons ø 22 | EV1131 | 1/100 |

#### Screws for apparatus

| Description | Code | Package/ No. of pieces |
|---|---|---|
| No.1000 perforating screws 4.2x13mm cross slotted head | EV1100 | 1/1000 |
| No.1000 perforating screws 4.2x19mm cross slotted head | EV1101 | 1/1000 |
| No.50 trilobed screws M6 L=10mm | AD1033 | 1/50 |

• Quick selection table 2–6 • In-depth technical information page 4–1 • Overall dimensions page 5–1

# IS2 Enclosures

## Ordering codes - Completion of structures

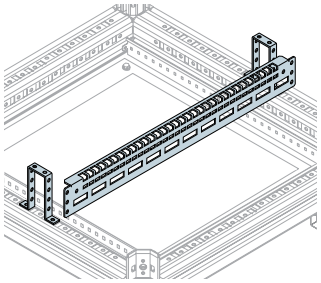

### Distribution and earthing system

**Bracket for EMC clamps and anchor cables**

| Description | Dimensions (mm) W | Code | Package/ No. of pieces |
|---|---|---|---|
| Bracket for EMC clamps and anchor cables | 600 | EV0068 | 1/1 |
| Bracket for EMC clamps and anchor cables | 800 | EV0069 | 1/1 |

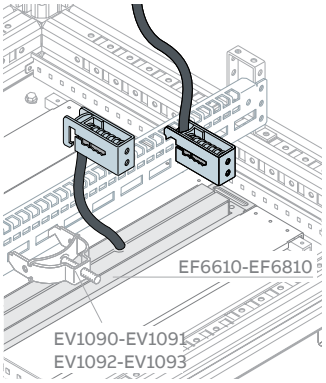


**EMC clamps**

| Description | Code | Package/ No. of pieces |
|---|---|---|
| No.10 EMC clamps for cables Ø min 10 mm max 20 mm | EV0108 | 1/10 |
| No.10 EMC clamps for cables Ø min 15 mm max 28 mm | EV0109 | 1/10 |
| No.10 EMC clamps for cables Ø min 4 mm max 15 mm | EV0110 | 1/10 |
| No.10 EMC clamps for cables Ø min 3 mm max 10 mm | EV0111 | 1/10 |
| No.10 EMC clamps for cables Ø min 20 mm max 37 mm | EV0112 | 1/10 |

# IS2 Enclosures

## Ordering codes - Completion of structures

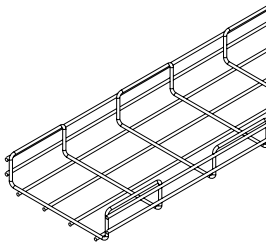

### Distribution and earthing system

**Steel wire sendzimir painted trays W=3000mm**

| Description | Dimensions (mm) H | Code | Package/ No. of pieces |
|---|---|---|---|
| Straight element B 75mm | 35 | 1SL9816A00 | 24 |
| Straight element B 100mm | | 1SL9817A00 | 24 |
| Straight element B 150 mm | | 1SL9818A00 | 24 |
| Straight element B 200mm | | 1SL9819A00 | 12 |
| Straight element B 300mm | | 1SL9820A00 | 12 |
| Straight element B 75mm | 50 | 1SL9836A00 | 24 |
| Straight element B 100mm | | 1SL9037A00 | 24 |
| Straight element B 150 mm | | 1SL9838A00 | 24 |
| Straight element B 200mm | | 1SL9839A00 | 12 |
| Straight element B 300mm | | 1SL9840A00 | 12 |
| Straight element B 400mm | | 1SL9841A00 | 6 |
| Straight element B 500mm | | 1SL9842A00 | 6 |
| Straight element B 75mm | 75 | 1SL9860A00 | 24 |
| Straight element B 100mm | | 1SL9861A00 | 24 |
| Straight element B 150 mm | | 1SL9862A00 | 24 |
| Straight element B 200mm | | 1SL9863A00 | 12 |
| Straight element B 300mm | | 1SL9864A00 | 12 |
| Straight element B 400mm | | 1SL9865A00 | 6 |
| Straight element B 500mm | | 1SL9866A00 | 6 |

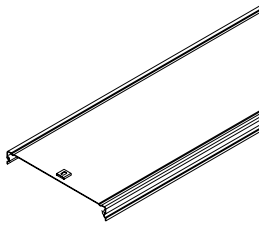

**Sendzimir covers W=3000mm**

| Description | Code | Package/ No. of pieces |
|---|---|---|
| Straight cover B 75mm | 07241 | 24 |
| Straight cover B 100mm | 07242 | 24 |
| Straight cover B 150mm | 07243 | 24 |
| Straight cover B 200mm | 07244 | 12 |
| Straight cover B 300mm | 07245 | 12 |
| Straight cover B 400mm | 07246 | 6 |
| Straight cover B 500mm | 07247 | 6 |

• Quick selection table 2–6 • In-depth technical information page 4–1 • Overall dimensions page 5–1

# IS2 Enclosures

## Ordering codes - Completion of structures

1SL9907A00-1SL9886A0
1SL9887A000

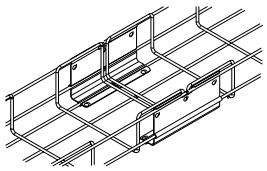

### Distribution and earthing system

**Straight sendzimir separator sections**

| Description | Code | Package/ No. of pieces |
|---|---|---|
| Separator section W 2000 mm for trays H 35 mm | 1SL9904A00 | 1/20 |
| Separator section W 2000 mm for trays H 50 mm | 06652 | 1/20 |
| Separator section W 2000 mm for trays H 75 mm | 07855 | 1/20 |

1SL9910A00÷1SL9915A00

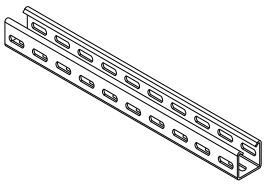

**Sendzimir accessories**

| Description | Code | Package/ No. of pieces |
|---|---|---|
| Linear joint | 1SL9880A00 | 1/2 |
| Snap-on linear joint for trays H 35mm | 1SL9907A00 | 1/2 |
| Snap-on linear joint for trays H 50mm | 1SL9886A00 | 1/2 |
| Snap-on linear joint for trays H 75mm | 1SL9887A00 | 1/2 |
| Fixing element for shelf complete with screws | 1SL9893A00 | 1/10 |
| Crosspiece L 150mm for trays B 75-100mm | 1SL9910A00 | 1/10 |
| Crosspiece L 200mm for trays B 150mm | 1SL9911A00 | 1/10 |
| Crosspiece L 250mm for trays B 200mm | 1SL9912A00 | 1/10 |
| Crosspiece L 350mm for trays B 300mm | 1SL9913A00 | 1/10 |
| Crosspiece L 450mm for trays B 400mm | 1SL9914A00 | 1/10 |
| Crosspiece L 550mm for trays B 500mm | 1SL9915A00 | 1/10 |

Note: The steel wire trays are also available in the following versions: unpainted sendzimir; electro-galvanisation; hot galvanisation after processing.

1SL9893A00

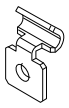

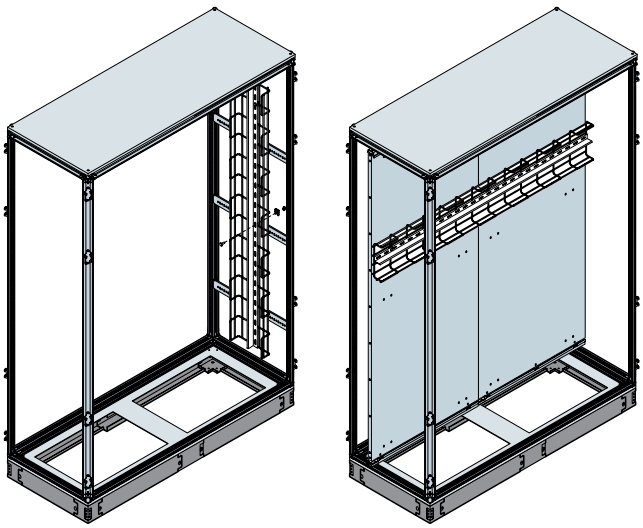

• Quick selection table 2–6 • In-depth technical information page 4–1 • Overall dimensions page 5–1

# IS2 Enclosures

## Ordering codes - Completion of structures

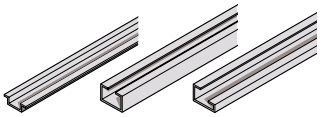

TS4013 TS4011 TS4012

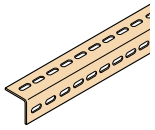

TS4000-TS4001-TS4002
TS4003-TS4004

### Distribution and earthing system

**Sections for accessories**

Universal sections of different types for mounting any component or for cable locking.

| Description | Dimensions (mm) W | Code | Package/ No. of pieces |
|---|---|---|---|
| No. 2 EN sections 5002 C30 | 2000 | TS4011 | 1/2 |
| No. 2 EN sections G32 | 2000 | TS4012 | 1/2 |
| No. 2 DIN EN sections 5022 35x7.5 | 2000 | TS4013 | 1/2 |
| No. 2 sections for structures | 600 | TS4000 | 1/2 |
| No. 2 sections for structures | 800 | TS4001 | 1/2 |
| No. 2 sections for structures | 1000 | TS4002 | 1/2 |
| No. 2 sections for structures | 1200 | TS4003 | 1/2 |
| No. 2 sections for structures | 1600 | TS4004 | 1/2 |

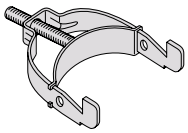

**Brackets for anchoring cables**

djustable cable clamping bracket. Can be mounted on sections with 10mm slot EV1050.

| Description | Code | Package/ No. of pieces |
|---|---|---|
| No. 10 cable clamping brackets Ø9÷16mm min÷max | EV1090 | 1/10 |
| No. 10 cable clamping brackets Ø16÷30mm min÷max | EV1091 | 1/10 |
| No. 5 cable clamping brackets Ø30÷48mm min÷max | EV1092 | 1/5 |
| No. 5 cable clamping brackets Ø48÷72mm min÷max | EV1093 | 1/5 |

EV1090-EV1091
EV1092-EV1093

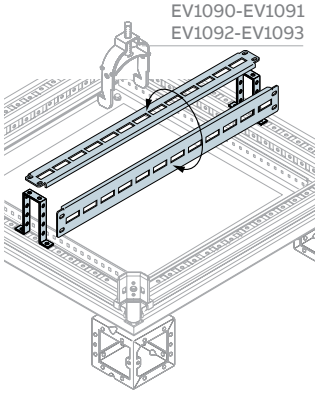

**Rail for anchoring cables**

| Description | Dimensions (mm) W | Code | Package/ No. of pieces |
|---|---|---|---|
| Rail for anchoring cables | 600 | EV0070 | 1/1 |
| Rail for anchoring cables | 800 | EV0071 | 1/1 |

• Quick selection table 2–6 • In-depth technical information page 4–1 • Overall dimensions page 5–1

# IS2 Enclosures

## Ordering codes - Completion of structures

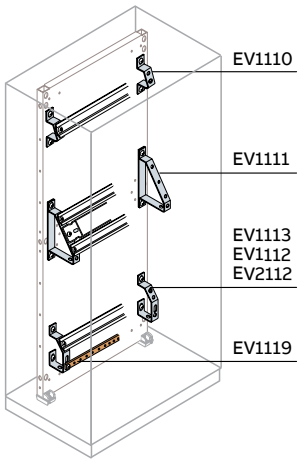


### Distribution and earthing system

**Angled supports for terminal boxes and earthing busbars**

| Description | Code | Package/ No. of pieces |
|---|---|---|
| No.50 angled supports 1 row of terminals | EV1110 | 1/50 |
| No.10 angled supports 1 row of terminals | EV2110 | 1/10 |
| No.2 angled supports 1 row of terminals + earth | EV1113 | 1/2 |
| No.50 angled supports 1 row of terminals + earth | EV1112 | 1/50 |
| No.10 angled supports 1 row of terminals + earth | EV2112 | 1/10 |
| No.10 angled supports double row of terminals | EV1111 | 1/10 |

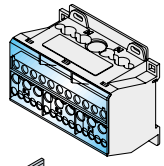
AD1004

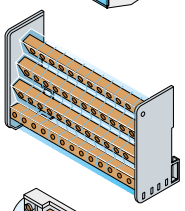
AD1028
AD1029

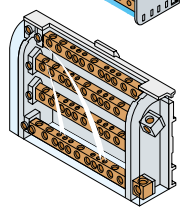
AD1027

### Modular dividers

| Description | Code | ABB Code | Package/ No. of pieces |
|---|---|---|---|
| **Four-pole** | | | |
| Modular 125A | AD1004 | 1STQ008291A0000 | 1/1 |
| Modular 125A - 93x89x48mm (HxWxD) | AD1028 | 1STQ008295A0000 | 1/1 |
| Modular 125A - 96x126x48mm (HxWxD) | AD1029 | 1STQ008296A0000 | 1/1 |
| Modular 160A - 90x160.5x50mm (HxWxD) | AD1027 | 1STQ008294A0000 | 1/1 |

# IS2 Enclosures

## Ordering codes - Completion of structures

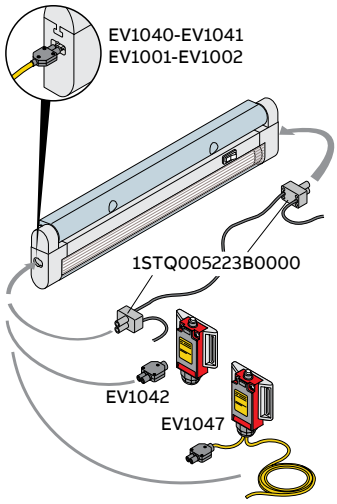


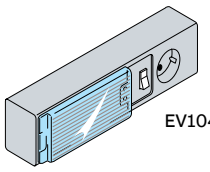


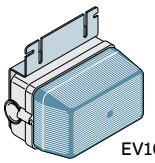


### Lighting and signalling devices

**Led electronic lamp/fluorescent lamps**

The electronic led lamps 3.6 W and 6.5 W and fluorescent lamps 8 W and 13 W are complete with mounting brackets and can be integrated with devices for voltage indicator.
The lamps have the following characteristics:

- Rotatable 180 degrees on the axis of the aluminum bracket
- Possibility of being mounted in series up to 5 elements (Fig. 1), the chain of lamps can be controlled by a single micro switch simplifying the installation and reducing the number of cables for connecting of the elements.

Moreover, the conformation of the electronic led lamps provides a very wide light emission and an increase of 70% compared to traditional lamps. So a lamp 8W is comparable with a 14W, and 13W with a version from 18/21W.

| Description | Code | Package/ No. of pieces |
|---|---|---|
| **Led electronic lamp** | | |
| Led electronic lamp 3,6W-24V AC/DC L=342mm | EV1001 | 1/1 |
| Led electronic lamp 6,5W-24V AC/DC L=574mm | EV1002 | 1/1 |
| **Fluorescent lamps** | | |
| Fluorescent lamp 8W-220/240V L=342mm | EV1040 | 1/1 |
| Fluorescent lamp 13W-220/240V L=574mm | EV1041 | 1/1 |
| Fluorescent lamp + socket 11W-230V L=355mm, complete with magnetic support | EV1043 | 1/1 |
| **Lamp holder** | | |
| Lamp holder E27 220V max 60W (without lamp) | EV1048 | 1/1 |

### Accessories for lamps

| Description | Code | Package/ No. of pieces |
|---|---|---|
| System for positioning limit switch + connector (to be cabled) No.2 NC contacts | EV1042 | 1/1 |
| No.5 universal bipolar power connectors | 1STQ005223B0000 | 1/5 |
| Two-pole cable L=10 metres | EV1045 | 1/1 |
| Limit switch and cabled two-pole connector | EV1047* | 1/1 |

* There are two cables L=1900mm and L=380mm in the pack.

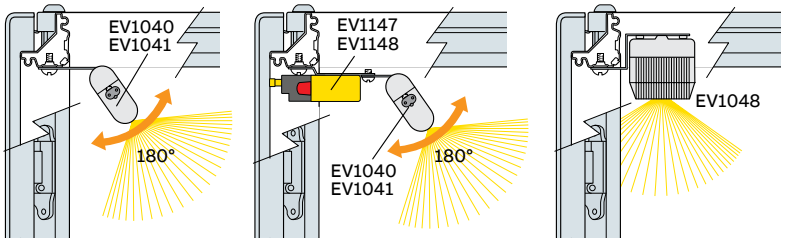


Fig. 1

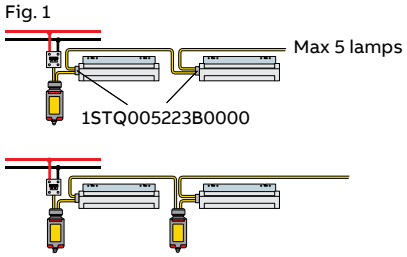


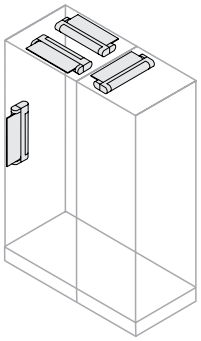

• Quick selection table 2–6 • In-depth technical information page 4–1 • Overall dimensions page 5–1

# IS2 Enclosures

## Ordering codes - Completion of structures

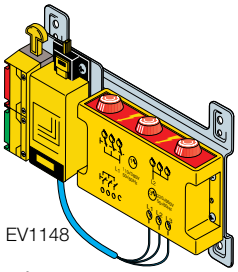

EV1148

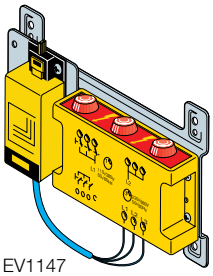

EV1147

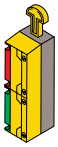

EV1143

### Lighting and signalling devices

**Voltage detector device**

Allows the passive safety level to be increased inside the electric enclosure, flashing when the door is opened. The basic version consists of a three-phase flashing light, three-pole limit switch and fixing bracket.

Compared to the basic version, the one with an auxiliary circuit is completed with a mechanical interlock which activates the electric contacts to control the auxiliary circuits. The interlock is always fitted with a NC contact code EV1144 (NO installed with door closed) which allows supply of a current launching coil.

A NC contact EV1144 can be added (NO installed with door closed) to allow opening of an undervoltage coil. It is also possible to supply circuits relative to internal lighting and/or to turn off fans/air conditioners using other contacts 2 NC EV1144, NO installed with door closed).

Order the fixing screws W=46mm code EV1146 separately for any additional contact. NO contact EV1145 (NC installed with door closed) is also available.

Possibility of exclusion during the testing stage with relative automatic recover when the door has been closed. In compliance with EN60947- 5-1 Standards, UL approved, operating temperature from -25 °C to +65 °C.

Flashing: terminal capacity max. 3mm2, Ue/Ie auxiliary contact capacity:
110V/6A, 230V/3A, 400V/2A, 600V/1.2A.

Rated thermal current Ith: 10 A

Max. terminal capacity: 2x1.5mm² / 1x3mm²

Flashing signalling device:

- Single phase 110-400V DC/AC 50/60Hz power supply voltage
- Three-phase AC 220-690V 50/60Hz

| Description | Ue (V) | Ui (V) | | Code | Package/ No. of pieces |
|---|---|---|---|---|---|
| Voltage detector device | 380/600 | 690 | | EV1147 | 1/1 |
| Voltage detector device interlock + 1 NC contact | 380/600 | 690 | | EV1148 | 1/1 |
| Interlock + 1 NC contact | | | | EV1143 | 1/1 |
| 1 NC contact | | | | EV1144 | 1/1 |
| 1 NO contact | | | | EV1145 | 1/1 |
| Screw L=46mm x 2 contacts | | | | EV1146 | 1/1 |

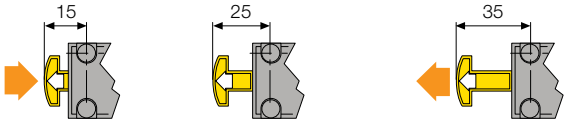


| | Code | Closed door | Open door | Open door By pass |
|---|---|---|---|---|
| Position of contacts | EV1144 | | | |
| | EV1145 | | | |

**Position switch**

Conforming to the EN50047 Standard, IP65 degree of protection, UL/CSA approved, can be assembled in all the positions directly on the enclosure structure by means of the accessory supplied. Technical data: Ui=500V Dimensions: 84x30x30mm. Aux. contact In =3A at 230V≈ or 1.8A at 400V≈ (in AC-15 EN 60947-5-1).

| Description | | Code | Package/ No. of pieces |
|---|---|---|---|
| Door position device | | EV1140 | 1/1 |

• Quick selection table 2–6 • In-depth technical information page 4–1 • Overall dimensions page 5–1

# IS2 Enclosures

## Ordering codes - Completion of structures

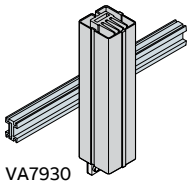

VA7930
VA7950
VA7975
VA7910

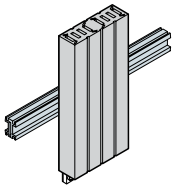

VA7915

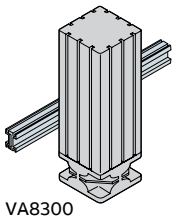

VA8300

### Temperature management

**Heater for IP20 electrical switchboards**

Their use prevents condensation in the electric cabinets. They consist of a heating element (PTC thermistor) inserted in an aluminium alloy ground plate. The PTC thermistor is a component which modifies its impedance according to the operating temperature. It is intrinsically stable and ensures primary safety features for the heater and service stability.
The main qualities of the heaters using PTC are:

- electrical absorption (or dissipated power) which is almost constant in the range of power supply voltage between 100 and 250V;
- electrical absorption bound by inverse law to the trend of the ambient temperature.
- natural or forced ventilator with incorporated ventilator;
- ambient thermostad integrated in the heater (versions with forced ventilation).

Snap-on assembly on 35 mm DIN rail. Requires a thermostat.

| Description | Dimensions (mm) H | W | D | Weight (kg) | Inrush current (A) | Fuse/ MCB (A) | Code | Package/ No. of pieces |
|---|---|---|---|---|---|---|---|---|
| Anti-condensation heater 30W, 110-240 Vac-dc | 125 | 125 | 42 | 0,30 | 1.0-1.5 | 2 / C6 | VA7930 | 1/1 |
| Anti-condensation heater 50W, 110-240 Vac-dc | 150 | 150 | 42 | 0,40 | 1.0-1.5 | 2 / C6 | VA7950 | 1/1 |
| Anti-condensation heater 75W, 110-240 Vac-dc | 150 | 150 | 42 | 0,40 | 2.0-2.5 | 2 / C6 | VA7975 | 1/1 |
| Anti-condensation heater 100W, 110-240 Vac-dc | 150 | 150 | 51 | 0,45 | 2.0-3.0 | 2 / C6 | VA7910 | |
| Anti-condensation heater 150W, 110-240 Vac-dc | 150 | 150 | 51 | 0,55 | 5.0-6.0 | 4 / C10 | VA7915 | 1/1 |
| Anti-condensation heater with fan 300W, 110-240 Vac 50-60H | 125 | 125 | 91 | 0,75 | 8.0-10 | 4 / C10 | VA8300 | 1/1 |

All the heaters with PTC absorb a higher power than the rated one on inrush according to a transitory which lasts a few tenths of a second.
If the heaters are to be supplied by means of an auxiliary transformer, its apparent power must be sized taking 1.5 times the rated power of the heaters with natural aeration and twice those with forced ventilation into consideration.

• Quick selection table 2–6 • In-depth technical information page 4–1 • Overall dimensions page 5–1

# IS2 Enclosures

## Ordering codes - Completion of structures

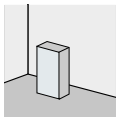
Detached, exposed on all sides

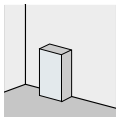
For closed to a wall structures

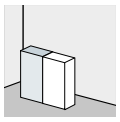
Left or right exposed structure

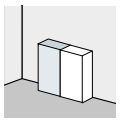
Left or right closed to a wall structure

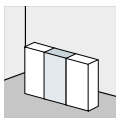
Central exposed structure

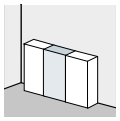
Central closed to a wall structure

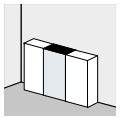
Central closed to a wall structure, with covered roof

## Temperature management

**IEC 890 method for calculating the effective cooling surface (CEI 17-43 method)**
The total power dissipation P of an enclosure is linked to the exchange effective dissipating surface S, the ΔT
difference between the inner and outer temperature and the k coefficient of heat exchange relative to the material
of the enclosure:
P = k * ΔT * S
k = 5,5 for painted steel
ΔT = T1-T2;
T1 = dew point temperature (on overage 25°C)
T2 = minimum ambient temperature.
The exchange surface S can be calculated using the following table taken from the CEI 17-43.

| Disposition of the cabinet | Calculating the enclosure surface S (mm²) | Dimensions (m) |
|---|---|---|
| Detached, exposed on all sides | S = 1,8 x H x (L+P) + 1,4 x L x P | L = width<br>H = height<br>P = depth |
| For closed to a wall structures | S = 1,4 x L x (H+P) + 1,8 x P x H | |
| Left or right exposed structure | S = 1,4 x P x (H+L) + 1,8 x L x H | |
| Left or right closed to a wall structure | S = 1,4 x H x (P+L) + 1,4 x L x P | |
| Central exposed structure | S = 1,8 x L x H + 1,4 x L x P + P x H | |
| Central closed to a wall structure | S = 1,4 x L x (H+P) + P x H | |
| Central closed to a wall structure, with covered roof | S = 1,4 x L x H + 0,7 x L x P + P x H | |

Using a ES1804K enclosure, in “for closed to a wall structures” case we will obtain:
T1 = 25 °C, T2 = 20 °C, K = 5,5, ΔT = (25-20) = 5 °C, S = 4,4m²

The total power dissipation P obtained will be:
P= k * ΔT * S = 121W

**The recommended heater is VA7915 (150W).**

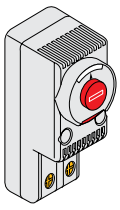

### IP20 Thermostat

Conforms to EN 60730-1, CE and cURus standards, IP20 degree of protection. Grey RAL 7035 colour; electrical life 100,000 cycles. Dimensions (HxWxD) 68x29x45mm, can be mounted on DIN rail. The version with NO (normally open) contact allows closure of a circuit activating ventilation, air conditioning, or alarms. The version with NC (normally closed) contact allows opening of a circuit, disconnecting any anti-condensation resistances.

| Description | Standard power supply V~/50-60Hz | Code | Package/ No. of pieces |
|---|---|---|---|
| NO ventilation thermostat | 12-60 V d.c.; 110-250V a.c. | EN0101K | 1/1 |
| NC heating thermostat | 12-60 V d.c.; 110-250V a.c. | EN0102K | 1/1 |

### Technical information

| Code | Standard power supply V~/50-60Hz | Contact capacity | | Temperature scale | Type of contact | Weight |
|---|---|---|---|---|---|---|
| | | Load Ω | Load L | | | |
| EN0101K | 12-60 V d.c.; 110-250V a.c. | 10A | 2A | -10 +80 °C | NO | 54g |
| EN0102K | 12-60 V d.c.; 110-250V a.c. | 10A | 2A | -10 +80 °C | NC | 54g |

• Quick selection table 2–6 • In-depth technical information page 4–1 • Overall dimensions page 5–1

# IS2 Enclosures

## Ordering codes - Completion of structures

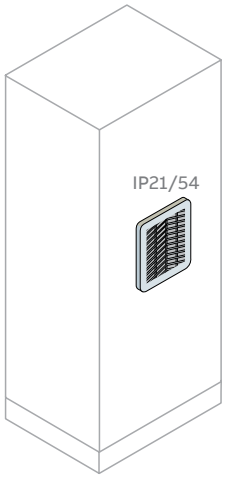


### Temperature management

**IP21/54 natural ventilation kit**

Gratings made of insulating material (self-extinguishing ABS UL94V-0) RAL7035 colour, complete with high dust collection capacity filter cloth (600g/m²), able to reduce maintenance interventions (cleaning by means of washing in water or by beating). Degree of protection IP21 without filter, IP54 with filter according to IEC 60529, Type 1 without filter, Typer 12 with filter according to UL approval 508 fitted with pre-assembled gasket seal.
CE and cURus approval.

| Air entry surface for ventilation | | Dimensions (mm) | | | | Package/ |
|---|---|---|---|---|---|---|
| Without filter cm² | With filter cm² | W | W | | Code | No. of pieces |
| **Grille+air passage filter kit** | | | | | | |
| 27 | 6 | 105 | 105 | | EN0105K | 1/1 |
| 53 | 10 | 150 | 150 | | EN0150K | 1/1 |
| 121 | 22 | 204 | 204 | | EN0204K | 1/1 |
| 225 | 32 | 250 | 250 | | EN0250K | 1/1 |
| 317 | 55 | 325 | 325 | | EN0325K | 1/1 |

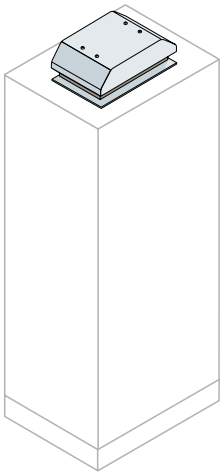

**IP23 aeration hood**

Structure made of steel painted RAL7035 colour, complete with selfadhesive gasket seal.
Useful aeration section 128 cm².

| Description | Dimensions (mm) W | W | D | Code | Custom Made Service | Package/ No. of pieces |
|---|---|---|---|---|---|---|
| Roof aeration kit | 375 | 295 | 119 | EN0481K | ✓ | 1/2 |

✓ The “Custom Made Service” is valid only for structures assembled at the factory, for more information please contact your local sales network.

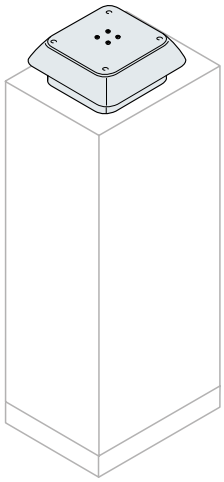

**IP54 ventilation hood**

Structure made up of plastic PC/ABS and aluminium (PC/ABS selfextinguishing according to UL 94V-0) painted RAL 7035 with polyuretanic foam gasket. CE and cURus approval.

| Description | Dimensions (mm) W | W | D | Code | Custom Made Service | Package/ No. of pieces |
|---|---|---|---|---|---|---|
| Roof aeration kit | 324 | 324 | 94 | EN0483K | ✓ | 1/1 |

✓ The “Custom Made Service” is valid only for structures assembled at the factory, for more information please contact your local sales network.

• Quick selection table 2–6 • In-depth technical information page 4–1 • Overall dimensions page 5–1

# IS2 Enclosures

## Ordering codes - Completion of structures

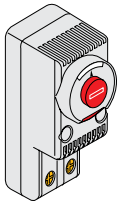

### Temperature management

**IP20 natural aeration Kit**

Allows the roof of the cabinet to be raised, increasing natural ventilation, keeping the IP20 degree of protection. This Kit must not be mounted when the lifting eyebolts are mounted for handling the enclosure.

| Description | Code | Package/ No. of pieces |
|---|---|---|
| Roof aeration Kit (IP20) | AE1015 | 1/1 |

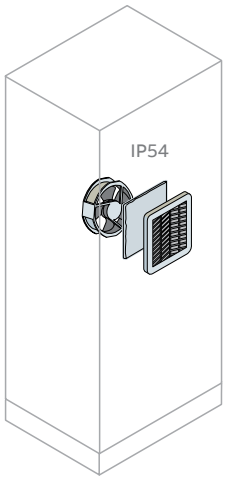


**IP54 forced ventilation Kit**

Grilles made of insulating material (ABS self-extinguishing UL94V-0) RAL7035 colour, complete with filter cloth with high dust accumulation capacity (600g/m2), able to reduce maintenance interventions (cleaning by washing with water or beating). IP54 degree of protection with filter according to UL approval 508 fitted with pre-mounted tightness gasket. Operating temperature -10 °C + 50 °C, for noise values see page 8-50. The fans allow reversible flow of air. CE and cURus (see mark) approval.

| Air entry surface for ventilation | | Dimensions (mm) | | | | |
|---|---|---|---|---|---|---|
| Consumption 50/60Hz (W) | Capacity 50/60Hz ($m^3$/h) | W | W | | Code | Package/ No. of pieces |
| **Ventilation filter with IP54 230V ~ fan** | | | | | | |
| 10/8 | 23/30 | 105 | 105 | | EN1105K | 1/1 |
| 20/19 | 57/61 | 150 | 150 | | EN1150K | 1/1 |
| 17/15 | 120/135 | 204 | 204 | | EN1204K | 1/1 |
| 29/29 | 240/270 | 250 | 250 | | EN1250K | 1/1 |
| 67/87 | 520/580 | 325 | 325 | | EN2325K | 1/1 |
| **Ventilation filter with IP 54 1150V~ fan** | | | | | | |
| 9/7 | 23/30 | 105 | 105 | | EN2105K | 1/1 |
| 20/18 | 57/61 | 150 | 150 | | EN2150K | 1/1 |
| 17/15 | 120/135 | 200 | 200 | | EN2204K | 1/1 |
| 30/30 | 240/270 | 250 | 250 | | EN2250K | 1/1 |
| 50/64 | 520/580 | 325 | 325 | | EN3325K | 1/1 |

In any forced ventilation kit, the fan wheel is balanced. In the larger sizes (cod. EN2325K and cod. EN3325K) there is the balancing clip. The balanced fan wheel ensures less noise and absorption.

• Quick selection table 2–6 • In-depth technical information page 4–1 • Overall dimensions page 5–1

# IS2 Enclosures

## Ordering codes - Completion of structures

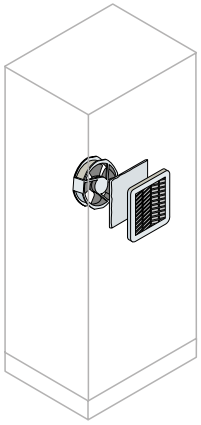

### Temperature management

**IP23 forced ventilation hood**

Allows suction from the roof of the cabinet. RAL 7035 colour, complete with self-adhesive gasket; consumption 58/78W, capacity 550/590m3/h. Operating temperature from -20 °C to + 60 °C, noise 68/71dB(A).

| Description | Dimensions (mm) W | W | D | Code | Custom Made Service | Package/ No. of pieces |
|---|---|---|---|---|---|---|
| Ventilation hoods 230V - 50/60Hz | 375 | 295 | 119 | EN0480K | ✓ | 1/1 |
| Ventilation hoods 115V - 50/60Hz | 375 | 295 | 119 | EN0482K | ✓ | 1/1 |

✓ The “Custom Made Service” is valid only for structures assembled at the factory, for more information please contact your local sales network.

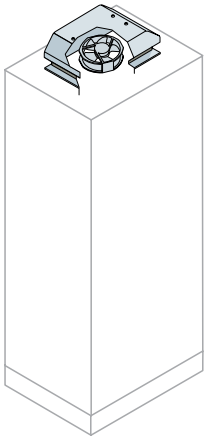

**IP54 Forced ventilation hood**

This hood allows the aspiration of the heat from the roof of the cabinet. Structure made up of plastic PC/ABS (PC/ ABS self-extinguishing according to UL 9V-0), with the top part in aluminium, painted RAL 7035 with polyuretanic foam gasket. CE omologation.

| Description | Dimensions (mm) W | W | D | Code | Custom Made Service | Package/ No. of pieces |
|---|---|---|---|---|---|---|
| Cappa di ventilazione 115V - 50/60Hz | 324 | 324 | 94 | EN0484K | ✓ | 1/1 |
| Cappa di ventilazione 230V - 50/60Hz | 324 | 324 | 94 | EN0485K | ✓ | 1/1 |

✓ The “Custom Made Service” is valid only for structures assembled at the factory, for more information please contact your local sales network.

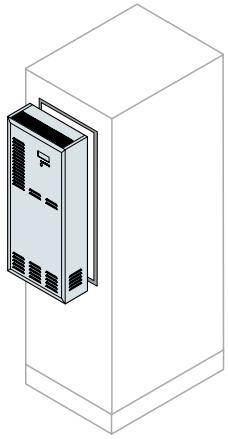

**IP54 air conditioners for wall mounting**

| Dimensions (mm) H | W | D | Refrigerating yield (W) | Capacity (m³/h) Evaporat. | Condens. | Assorbedpower (W) | Code | Package/ No. of pieces |
|---|---|---|---|---|---|---|---|---|
| **Wall mounting - Power supply 230V AC** | | | | | | | | |
| 1025 | 380 | 198 | 605 | 380 | 400 | 330 | VZ1550K | 1/1 |
| 1025 | 380 | 198 | 810 | 350 | 400 | 400 | VZ1850K | 1/1 |
| **Wall mounting+switchboard - Power supply 230V AC** | | | | | | | | |
| 1025 | 380 | 198 | 1300 | 350 | 600 | 650 | VZ1400K | 1/1 |
| 1200 | 380 | 230 | 1926 | 500 | 950 | 800 | VZ2000K | 1/1 |

The filters are not included.

• Quick selection table 2–6 • In-depth technical information page 4–1 • Overall dimensions page 5–1

# IS2 Enclosures

## Ordering codes - Completion of structures

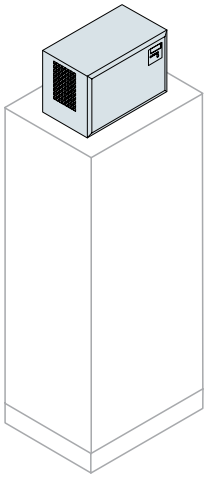

### Temperature management

**IP54 air conditioners for roof mounting**

| Dimensions (mm) | | | Refrigerating yield (W) | Capacity (m³/h) | | Code | Package/ No. of pieces |
|---|---|---|---|---|---|---|---|
| H | W | D | | Evaporat. | Condens. | | |
| **Roof mountingo- Power supply 230V AC** | | | | | | | |
| 350 | 600 | 400 | 810 | 350 | 400 | VZ8501K | 1/1 |
| **Roof mounting+switchboard- Power supply 230V AC** | | | | | | | |
| 350 | 600 | 400 | 1300 | 350 | 600 | VZ1401K | 1/1 |

Not suitable for enclosure W=600 mm
Filters are not included.

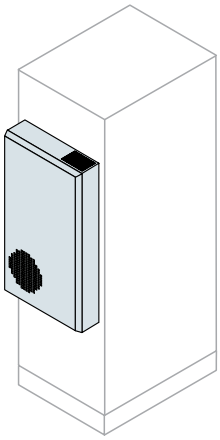

**IP54 heat exchangers (air-air) for wall mounting**

| Dimensions (mm) | | | Refrigerating yield (W) | Capacity (m³/h) | Code | Package/ No. of pieces |
|---|---|---|---|---|---|---|
| H | W | D | | External | | |
| **Wall mounting- Power supply 230V AC** | | | | | | |
| 710 | 370 | 130 | 35 | 200 | VS4235K | 1/1 |
| 900 | 435 | 175 | 85 | 300 | VS6285K | 1/1 |

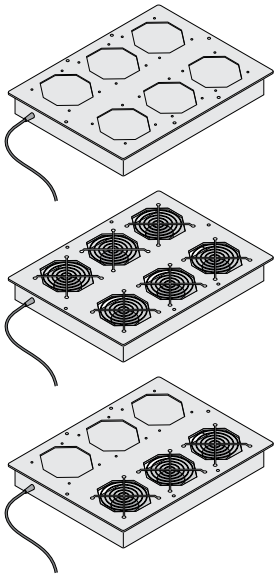

**Ventilation roof module**

The ventilation roof module is composed of a galvanized steel sheet base 2,00mm and a steel painted cover RAL7035, that hosts the fans.
There are two available products:
Empty ventilation module, that has a pre-cut in order to accommodate the fans
Ventilation module with 3 fans powered by 48V dc
Each figure has an internal pre-wired terminal block for wiring the fans and a power cord L=2.5 m. The increase of the air flow is possible through the addition of a ventilation kit (Code EV0061); each ventilation kit has the tools for the wiring and installation in the ventilation roof module.

| Description | Code | Package/ No. of pieces |
|---|---|---|
| Ventilation empty roof module | EV0058 | 1/1 |
| No.1 fan 230V a.c. 50/60 Hz wiring material | EV0061 | 1/1 |

**Technical caracteristics**

**EV0061**

| | |
|---|---|
| Standard power supply: | 230V 50/60 Hz |
| Total power consumption: | 15W |
| Capacity air of the fan: | 150 m³/h |
| Noise: | 37-41 dB (A) |

Drilling template 8-45.

• Quick selection table 2–6 • In-depth technical information page 4–1 • Overall dimensions page 5–1

# IS2 Enclosures

## Ordering codes - Completion of structures

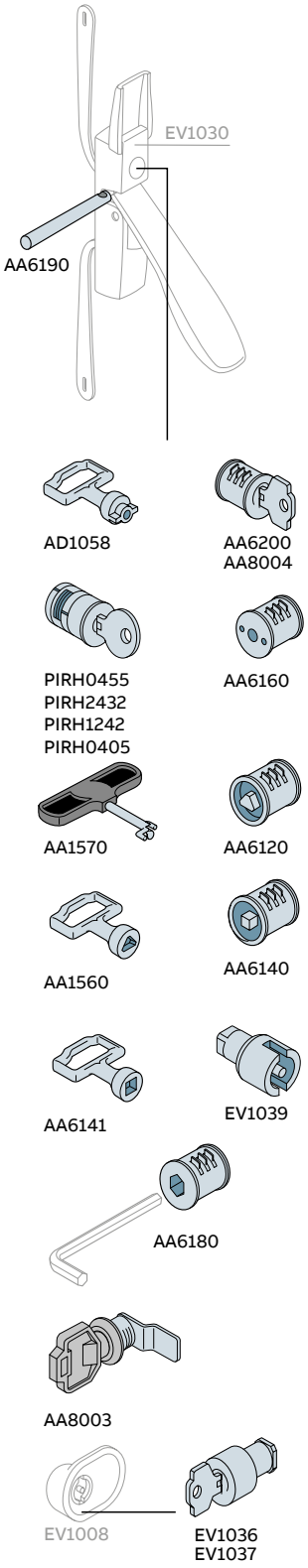


## Accessories

### Closing systems

Inserts interchangeable with the double tongue ones supplied as standard, complete with relative key.

| Description | Code | Custom Made Service | Package/ No. of pieces |
|---|---|---|---|
| **Spare parts and accessoried for EV1030 handle** | | | |
| No. 10 plastic covers for IS2 handle | EV0101 | | 1/1 |
| Handle complete with lock | EV1030 | | 1/1 |
| Zamak (Zn+Al+Mg) alloy key for double tongue insert, for external door, single door version | AD1058 | | 1/1 |
| Yale insert and key for external door, single door version | AA6200 | ✓ | 1/1 |
| Ronis E739 insert and key for external door, single door version | AA8004 | ✓ | 1/1 |
| Ronis insert 455 and key | PIRH0455 | | 1/1 |
| Ronis insert 2432E and key | PIRH2432 | | 1/1 |
| Ronis insert 1242E and key | PIRH1242 | | 1/1 |
| Ronis insert 405 and key | PIRH0405 | | 1/1 |
| FIST (FIAT) insert for external door, single door version | AA6160 | ✓ | 1/1 |
| FIAT key for external door, single door version | AA1570 | | 1/1 |
| Triangular insert, 6.4 male on Ø7.6, for external door, single door version | AA6120 | ✓ | 1/1 |
| Key for triangular insert for external door, single door version | AA1560 | | 1/1 |
| Square insert, 7 male, for external door, single door version | AA6140 | ✓ | 1/1 |
| Key for square insert for external door, single door version | AA6141 | | 1/1 |
| Hexagonal insert, 8mm socket type; key not available; for external door, single door version | AA6180 | ✓ | 1/1 |
| Double tongue insert without key for handle | EV1039 | | 1/1 |
| Accessory for handle locking with external padlock (not provided) | AA6190 | | 1/1 |
| **Spare parts and accessoried for EV1008 box** | | | |
| Box with double tongue insert made in plastic with key for inner door | EV1008 | | **1/1** |
| Single code Yale insert for inner door | EV1036 | | **1/1** |
| Ronis 455 insert for inner door | EV1037 | | **1/1** |
| Double tongue insert with plastic key for box | AA6100 | | **1/1** |

✓ The “Custom Made Service” is valid only for structures assembled at the factory, for more information please contact your local sales network.

• Quick selection table 2–6 • In-depth technical information page 4–1 • Overall dimensions page 5–1

# IS2 Enclosures

## Ordering codes - Completion of structures

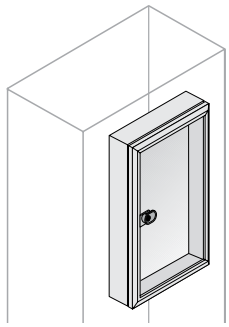

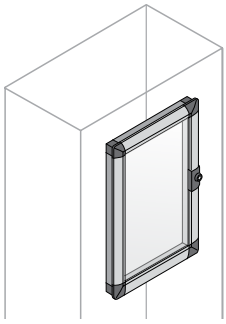

### Accessories

**IP20 and IP54 protective windows with glass with or witout frame**

Made of aluminium, complete with pre-assembled gasket and closure box with interchangeable double tongue key. Can hold components with 38 and 69mm depth.
The dimension of the frame 30mm. 140° door opening.

| Dimensions (mm) H | W | Usable D | Code | Package/ No. of pieces |
|---|---|---|---|---|
| **Protection windows IP20 with frame** | | | | |
| 400 | 400 | 79 | EV1081 | 1/1 |
| 600 | 200 | 48 | EV1082 | 1/1 |
| 600 | 200 | 79 | EV1083 | 1/1 |
| 600 | 400 | 79 | EV1085 | 1/1 |
| 600 | 600 | 79 | EV1087 | 1/1 |
| **Protection windows IP54 without frame** | | | | |
| 400 | 400 | 26 | EV8880 | 1/1 |
| 600 | 600 | 26 | EV8881 | 1/1 |
| 600 | 400 | 26 | EV8882 | 1/1 |

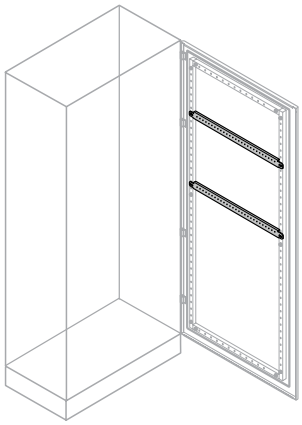

**Horizontal reinforcement profiles for door**

Crosspieces made of galvanised sheet with 25 mm pitch drilling, allow accessories to be fixed inside the blind doors. They are fixed onto the door reinforcement tube.

| Description | Dimensions (mm) W | Code | Custom Made Service | Package/ No. of pieces |
|---|---|---|---|---|
| No.2 horizontal profiles H=35mm | 600 | EB1041 | ✓ | 1/2 |
| No.2 horizontal profiles H=35mm | 800 | EB1042 | ✓ | 1/2 |
| No.2 horizontal profiles H=35mm | 1000 | EB1043 | ✓ | 1/2 |

✓ The “Custom Made Service” is valid only for structures assembled at the factory, for more information please contact your local sales network.

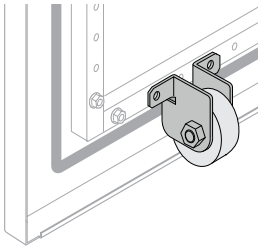

**Door supporting wheel**

Use in case of heavy loads on blind doors (e.g. air conditioner).

| Description | Code | Package/ No. of pieces |
|---|---|---|
| Supporting wheel for door W≥600mm | EV1000 | 1/1 |

• Quick selection table 2–6 • In-depth technical information page 4–1 • Overall dimensions page 5–1

# IS2 Enclosures

## Ordering codes - Completion of structures

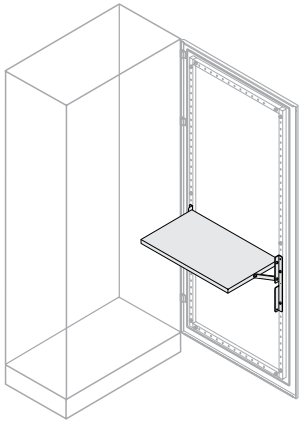

## Accessories

### Folding shelves for door

| Description | Dimensions (mm) W | Code | Package/ No. of pieces |
|---|---|---|---|
| Shelf 280x250mm (WxD) for door | 600 | EV1060K | 1/1 |
| Shelf 480x250mm (WxD) for door | 800 | EV1061K | 1/1 |

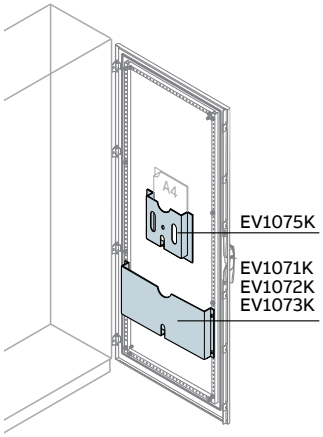


### Document pockets RAL 7035

Fixed inside the door by means of adhesive parts in the case of the plastic version EV1075K, or directly by means of screws to the sections of the door for the metal versions. Both versions are RAL 7035 colour.

| Description | Dimensions (mm) W | Code | Package/ No. of pieces |
|---|---|---|---|
| Metal document pocket for door | 600 | EV1071K | 1/1 |
| Metal document pocket for door | 800 | EV1072K | 1/1 |
| Metal document pocket for door | 1000 | EV1073K | 1/1 |
| Plastic document pocket for A4 | | EV1075K | 1/1 |

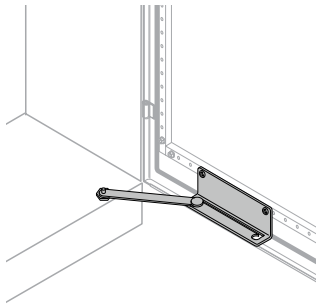

### Door anti-closure and locking device

Device which can only be mounted in the versions with blind door; in the case of double door versions, two devices are needed. Keeps the door in the open position.

| Description | Code | Custom Made Service | Package/ No. of pieces |
|---|---|---|---|
| Door anti-closure device | EV0005 | ✓ | 1/1 |

For blind doors W≥600mm. Cannot be mounted with glazed doors, with inner door and with modular panel installed in the last available position.

✓ The “Custom Made Service” is valid only for structures assembled at the factory, for more information please contact your local sales network.

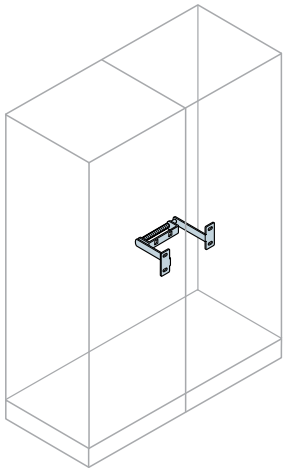

### Door lock

In the case of several cabinets side by side, this prevents a door being opened before the adjacent door has been opened. It is therefore possible to bind opening the doors of an entire battery of cabinets side by side to opening of a single door. Can be mounted on doors with the same opening direction.

| Description | Code | Custom Made Service | Package/ No. of pieces |
|---|---|---|---|
| Door lock | EV1160 | ✓ | 1/1 |

✓ The “Custom Made Service” is valid only for structures assembled at the factory, for more information please contact your local sales network.

• Quick selection table 2–6 • In-depth technical information page 4–1 • Overall dimensions page 5–1

# IS2 Enclosures

## Ordering codes - Completion of structures

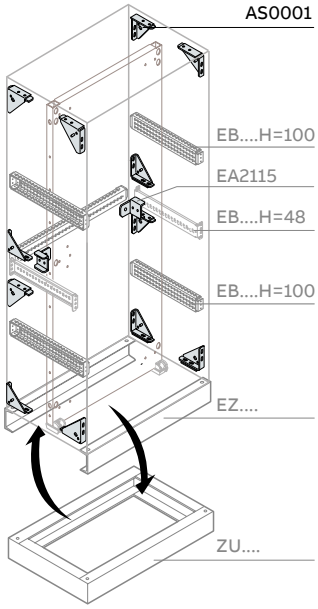


## Accessories

### Antiseismic tests

Tests constitute a reference base for similar structures for dimensions and for load. IS2 enclosures 2000x800x800mm (HxWxD) with uniform distributed load of 435 kg.
Enclosures have been tested according to the Standards CEI EN 60068-2-6 and IEC 60068-2-57 “Environmental esting Part. 2: Tests method. Vibration - Time history method” and to the Standard IEEE Std 693 “Recommended Practice for Seismic Design of Substation”.

### Similar application fields*

**Enclosure without specific accessories**

| According to the Standard IEC 60068-2-57 - IEEE Std 693 | Seismic Zone IEC 68-3-3 | Richter scale | Mercalli scale |
|---|---|---|---|
| Shock level test up to 0.5 g | Zone 4 | 7 | 9 |

**Enclosure with specific accessories AS0001+crosspieces+reinforced plinth**

| According to the Standard IEC 60068-2-57 - IEEE Std 693 | Seismic Zone IEC 68-3-3 | Richter scale | Mercalli scale |
|---|---|---|---|
| Shock level test up to 0.75 g | Zone 4 | 7,5 | 10 |

* Values of different scales are indicative.

### Codes of structures for seismic zone

Antiseismic kit is made of n.12 reinforced angles to be mounted on the side and in the corners of structure and in corrispondence of the crosspieces... H=100mm to be ordered. Enclosure must be completed with other crosspieces EB....H=48mm and with the reinforced plinth or the single plinth.

| Description | Code | Package/ No. of pieces |
|---|---|---|
| No.12 reinforced antiseismic angles | AS0001 | 1/12 |
| Crosspieces H=48mm (see pag. 2-70) C-shaped profile | EB.... | |
| Crosspieces H=100mm (see pag. 2-70) C-shaped profile | EB.... | |
| Reinforced plinth H=100mm (see pag. 2-70) | EZ.... | |
| Single plinth H=100mm (see pag. 2-64) | ZU....* | |

* Maximum length of 6m.
For single cabinet use reinforced plinth.

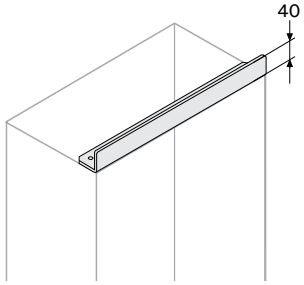


### Dust guard trim in metal sheet 1,5mm RAL 7035

Dust guard trim avoids the deposit of dust on the upper edge of the door and between the door and the roof of the cabinet. On the dust guard trim is possible fix labels, buttons or lights.

| Description | Dimensions (mm) W | Code | Package/ No. of pieces |
|---|---|---|---|
| Metal dust guard trim RAL 7035 | 600 | EV0063 | 1/1 |
| Metal dust guard trim RAL 7035 | 800 | EV0064 | 1/1 |

# IS2 Enclosures

## Ordering codes - Completion of structures

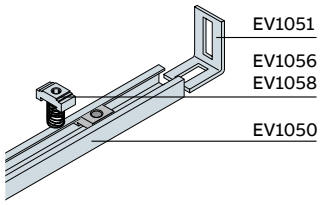


### Accessories

**Sliding aluminium rails for general purposes**

| Description | Code | Package/ No. of pieces |
|---|---|---|
| No. 10 aluminium section 30x15x1,8 - L=2000mm | EV1050 | 1/10 |
| No. 25 fixing brackets for EV1050 | EV1051 | 1/25 |
| No. 100 M6 aluminium nuts for EV1050 | EV1056 | 1/100 |
| No. 100 M8 aluminium nuts for EV1050 | EV1058 | 1/100 |

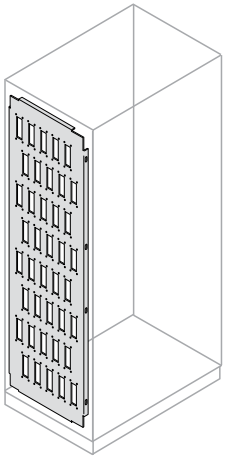

**Connector holder panel**

Panel made of 2,00mm thick galvanised steel sheet prepared with drillings for 24-pole connectors.

| Dimensions (mm) H | D | Total No.holes | No. lines/holes | Code | Package/ No. of pieces |
|---|---|---|---|---|---|
| 1800 | 500 | 36 holes | 9/4 | EE1852 | 1/1 |
| | 600 | 45 holes | 9/5 | EE1862 | 1/1 |
| 2000 | 500 | 40 holes | 10/4 | EE2052 | 1/1 |
| | 600 | 50 holes | 10/5 | EE2062 | 1/1 |
| 2200 | 500 | 48 holes | 12/4 | EE2252 | 1/1 |
| | 600 | 60 holes | 12/5 | EE2262 | 1/1 |

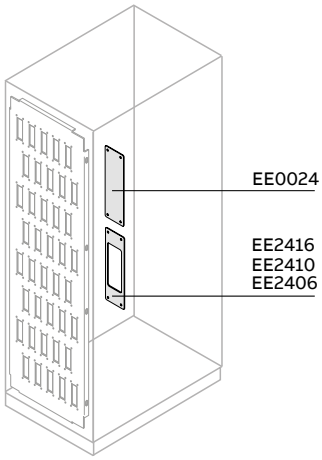


**Connector plates**

These allow closure of the unused holes on the connector holder panels.

| Description | Code | Package/ No. of pieces |
|---|---|---|
| No.10 24-pole connector closure plates | EE0024 | 1/10 |
| No.5 plates for reducing connectors from 24 to 16 poles | EE2416 | 1/5 |
| No.5 plates for reducing connectors from 24 to 10 poles | EE2410 | 1/5 |
| No.5 plates for reducing connectors from 24 to 6 poles | EE2406 | 1/5 |

• Quick selection table 2–6 • In-depth technical information page 4–1 • Overall dimensions page 5–1

# IS2 Enclosures

## Ordering codes - Completion of structures

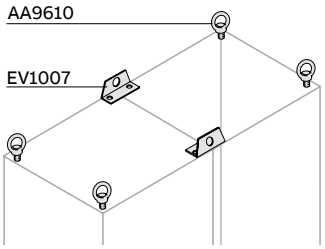


## Accessories

### Lifting eyebolts and lifting reinforcements

These allow the cabled enclosures to be handled. The lifting eyebolts are made of steel treated with white passivated galvanisation, the lifting reinforcements are painted grey RAL 7012 colour.

| Description | Code | Custom Made Service | Package/ No. of pieces |
|---|---|---|---|
| No.4 lifting eyebolts M12 | AA9610 | ✓ | 1/4 |
| No.2 lifting reinforcements | EV1007 | ✓ | 1/2 |

✓ The "Custom Made Service" is valid only for structures assembled at the factory, for more information please contact your local sales network.

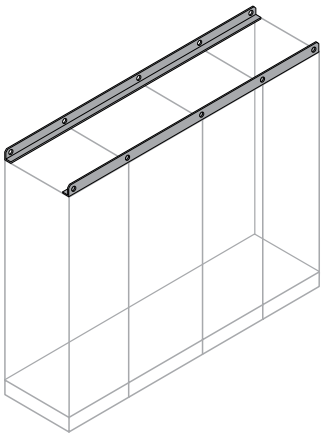

### Lifting beams

The beam is prepared with holes for lifting tools. Length up to 6 metres. Grey RAL 7012 colour orange peel.

| Description | Code | Custom Made Service | Package/ No. of pieces |
|---|---|---|---|
| A pair of lifting beams for enclosures side by side | TU1000 | ✓ | 1/2 |
| A pair of lifting beams for enclosures side by side - Assembled | TU1001 | ✓ | 1/2 |

- Service only valid for factory pre-assembled enclosures.
- The drawing of the front view of the enclosure battery must always be enclosed, specifying the width, depth and sequence of the enclosures for each column.
- Unit of measurement for the order: METRE.
- Maximum width of 6m.

✓ The "Custom Made Service" is valid only for structures assembled at the factory, for more information please contact your local sales network.

1STQ005334B0000

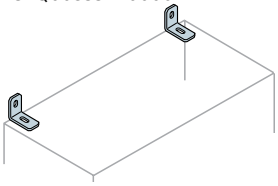

### Fixing brackets for IS2 H=1400 or H=1600mm

| Description | Code | Package/ No. of pieces |
|---|---|---|
| Fixing brackets for H=1400/1600mm | 1STQ005334B0000 | 1/2 |

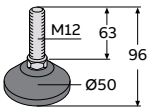


EV1004

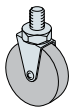

EV1005

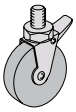

EV1006

### Feet and wheels

| Description | Code | Package/ No. of pieces |
|---|---|---|
| No.4 M12 levelling feet (500kg each) | EV1004 | 1/4 |
| No.4 Ø 80mm free wheels (70kg each) | EV1005 | 1/4 |
| No.4 Ø 80mm braked wheels (70kg each) | EV1006 | 1/4 |

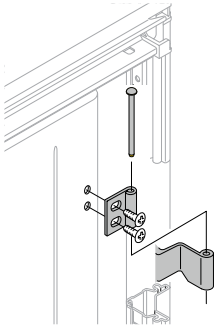

### Hinges opening 180°

Made of 2,5mm thick sheet, allow the door to be opened180° also for battery assembled enclosures.

| Description | Code | Custom Made Service | Package/ No. of pieces |
|---|---|---|---|
| No.4 hinges opening 180° | CR0181 | CR0180M* | 1/4 |

*The "Custom Made Service" is valid only for structures assembled at the factory, for more information please contact your local sales network.

• Quick selection table 2–6 • In-depth technical information page 4–1 • Overall dimensions page 5–1

# IS2 Enclosures

## Ordering codes - Completion of structures

EV1157

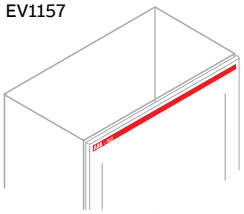

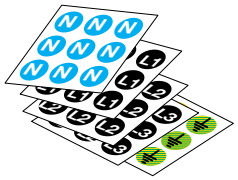

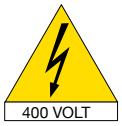




## Accessories

### Marking

| Description | Code | Package/ No. of pieces |
|---|---|---|
| No.5 adhesive labels ABB-IS2 W=1000mm | EV1157 | 1/5 |
| No.490 adhesive labels Ø 12mm N symbol | EV1150 | 1/490 |
| No.490 adhesive labels Ø 12mm L1symbol | EV1151 | 1/490 |
| No.490 adhesive labels Ø 12mm L2 symbol | EV1152 | 1/490 |
| No.490 adhesive labels Ø 12mm L3 symbol | EV1153 | 1/490 |
| No.490 adhesive labels Ø 12mm T symbol | EV1154 | 1/490 |
| No.10 triangular adhesive labels 125mm with 400V lightning arrow symbol | EV1155 | 1/10 |
| No.100 triangular adhesive labels 50mm with lightning arrow symbol | EV1156 | 1/100 |

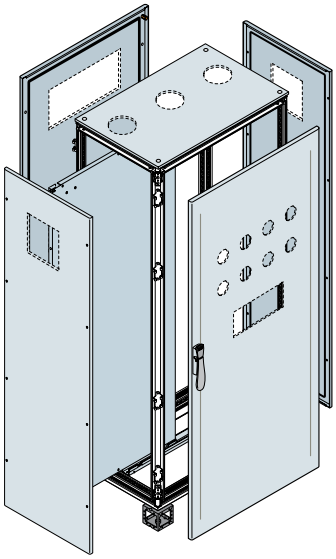

Custom Made Service

**Special Painting Service**

Special painting service has to be managed contacting your local sales network. It is necessary to specify the required color in the order. For any other component or further information, please contact your local sales network.

**Special Drilling Service**

Special drilling service has to be managed contacting your local sales network. It is necessary to attach the drawing of the drillings (in .dwg format) along with the order. For any other component or further information, please contact your local sales network.

• Quick selection table 2–6 • In-depth technical information page 4–1 • Overall dimensions page 5–1

# IS2 Enclosures

## Ordering codes - Completion of structures

### Spare parts and mounting hardware

| Description | Code | Package/ No. of pieces |
|---|---|---|
| Top 400x400mm (WxD) | EK4040RK | 1/1 |
| Top 400x500mm (WxD) | EK4050RK | 1/1 |
| Top 400x600mm (WxD-DxW) | EK4060RK | 1/1 |
| Top 400x800mm (WxD-DxW) | EK4080RK | 1/1 |
| Top 400x1000mm (WxD-DxW) | EK4010RK | 1/1 |
| Top 600x500mm (WxD) | EK6050RK | 1/1 |
| Top 600x600mm (WxD) | EK6060RK | 1/1 |
| Top 600x800mm (WxD-DxW) | EK6080RK | 1/1 |
| Top 600x1000mm (WxD-DxW) | EK6010RK | 1/1 |
| Top 800x500mm (WxD) | EK8050RK | 1/1 |
| Top 800x800mm (WxD) | EK8080RK | 1/1 |
| Top 800x1000mm (WxD-DxW) | EK8010RK | 1/1 |
| Top 1000x500mm (WxD) | EK1050RK | 1/1 |
| Top 1000x1000mm (WxD) | EK1010RK | 1/1 |
| Top 1200x400mm (WxD) | EK1240RK | 1/1 |
| Top 1200x500mm (WxD) | EK1250RK | 1/1 |
| Top 1200x600mm (WxD) | EK1260RK | 1/1 |
| Top 1200x800mm (WxD) | EK1280RK | 1/1 |
| Door closing lever mechanisms H=1800mm | EV1802 * | 1/1 |
| Door closing lever mechanisms H=2000mm | EV2002 * | 1/1 |
| Door closing lever mechanisms H=2200mm | EV2202 * | 1/1 |
| Door closing box complete with double tongue insert | EV1030 | 1/1 |
| 3mm double tongue insert | AA6100 | 1/1 |
| Standard handle complete with double tongue insert (without tab) | EV1008 | 1/1 |
| Double tongue insert for EV1030 | EV1039 | 1/1 |
| Zn + Al + Mg alloy double tongue key | AD1058 | 1/1 |

* The code contains no.8 plastic guide blocks and no.2 locking rods.

• Quick selection table 2–6 • In-depth technical information page 4–1 • Overall dimensions page 5–1

# IS2 Enclosures

## Ordering codes - Completion of structures

### Spare parts and mounting hardware

| Description | Code | Package/ No. of pieces |
|---|---|---|
| Blind side panel 1800x400 (HxW) | EL1841K | 1/1 |
| Blind side panel 1800x500 (HxW) | EL1851K | 1/1 |
| Blind side panel 1800x600 (HxW) | EL1861K | 1/1 |
| Blind side panel 1800x800 (HxW) | EL1881K | 1/1 |
| Blind side panel 1800x1000 (HxW) | EL1811K | 1/1 |
| Blind side panel 2000x400 (HxW) | EL2041K | 1/1 |
| Blind side panel 2000x500 (HxW) | EL2051K | 1/1 |
| Blind side panel 2000x600 (HxW) | EL2061K | 1/1 |
| Blind side panel 2000x800 (HxW) | EL2081K | 1/1 |
| Blind side panel 2000x1000 (HxW) | EL2011K | 1/1 |
| Blind side panel 2200x400 (HxW) | EL2241K | 1/1 |
| Blind side panel 2200x500 (HxW) | EL2251K | 1/1 |
| Blind side panel 2200x600 (HxW) | EL2261K | 1/1 |
| Blind side panel 2200x800 (HxW) | EL2281K | 1/1 |
| Blind side panel 2200x1000 (HxW) | EL2211K | 1/1 |
| Track for front plate insertion D=400mm | EA0401 | 1/1 |
| Track for front plate insertion D=500mm | EA0501 | 1/1 |
| Track for front plate insertion D=600mm | EA0601 | 1/1 |
| Track for front plate insertion D=800mm | EA0801 | 1/1 |
| Track for front plate insertion D=1000mm | EA1001 | 1/1 |
| No.5 sliding back plate kits with front insertion | EV0001 | 1/5 |
| Cloth for filter 105x105mm (HxW) | EN3105 | 1/6 |
| Cloth for filter 150x150mm (HxW) | EN3150 | 1/6 |
| Cloth for filter 204x204mm (HxW) | EN3204 | 1/6 |
| Cloth for filter 250x250mm (HxW) | EN3250 | 1/6 |
| Cloth for filter 325x325mm (HxW) | EN3326 | 1/6 |
| “IS2 survival kit” accessories and spare part items | EV1057 (1) | 1/1 |

(1) Kit consisting of: No.10 mounting kits for plinth flanges H=100mm; No.10 kits for mounting uprights; No.10 mounting kits for rear/side panels; No.5 kits for mounting plate, No.10 kits for door accessories, No.4 hinges for IP on intermediate upright; No.6 squares box door with overlapping closure; No.5 kits of 50 pcs refill screws, No. 5 kits of 20 pcs cage nuts; No. 6 blocks for mounting door with overlapping closure.

# IS2 Enclosures

## Ordering codes - Completion of structures



### Fixing accessories for apparatus

| Description | Code | Package/ No. of pieces |
|---|---|---|
| No.1000 cross-cut head piercing screws 4.2x13mm | EV1100 | 1/1000 |
| No.1000 cross-cut head piercing screws 4.2x19mm | EV1101 | 1/1000 |
| No.50 screws M6 x 13mm cross rounded head | EV6130 | 1/50 |
| No.50 cage nut M6 for square hole 9,2 x 9,2mm | EV6131 | 1/50 |
| No.20 M5 cage nuts - insertion from the front | EV0102 (1) | 1/20 |
| No.20 M6 cage nuts - insertion from the front | AD1036 (2) | 1/20 |
| No.50 trilobed screws M6 L=10mm | AD1033 | 1/50 |
| No.20 Torx screws M5 and nylon washer L=16mm | EV0103 | 1/20 |
| No.20 Torx screws M6 and nylon washer L=16mm | EV0104 | 1/20 |
| No.500 special screws for IS2 side and rear panels | EV1102 | 1/500 |
| No.8 Hinges and rivets for IS2 standard uprights | EV1103 | 1/8 |

(1) For rack frames' squared holes and chage nuts 9.2x9.2mm.
(2) For rectangular holes 13x8,2mm.

# IS2 Enclosures

## Examples of configurations

### Composition of the supply

**Width ≤1000mm**

- Self-supporting galvanised steel structure consisting of a closed section drilled with 25mm pitch
- Removable roof
- Plinth H=100mm consisting of four angle pieces (2,5mm)
- Rear panel
- Blind door made of 2,00mm thick sheet, fitted with polyurethane gasket, complete with fixed handle with double tongue key. Reversible with 4 closure points and complete with internal reinforcement frame for W≥600mm and earthing pins.
- Glazed door made of 2,00mm thick sheet, with 4mm thickness safety glass, fitted with polyurethane gasket, complete fixed handle with double tongue key. Reversible with 4 closure points and complete with internal reinforcement frame and earthing pins.
- Cable container door (2,00mm) with opposite opening (standard hinging on the left) complete with double box with double tongue key (interchangeable) for cable container W=200mm or flange for cable container W=400mm, intermediate removable crosspiece and upright
- Packed separately

**Width ≥ 1200mm**

- Self-supporting galvanised steel structure consisting of a closed section drilled with 25mm pitch
- Removable roof
- Plinth H=100mm consisting of four angle pieces plus intermediate support (3,00mm) and relative covering flanges
- Rear panel with 1,5mm thickness (two panels with W=800mm for the version W=1600mm)
- Blind doors (2,00mm) with opposite opening complete with internal reinforcement frame and lever closing mechanisms in four points, removable intermediate crosspiece and upright for improved access
- Glazed doors (2,00mm) with 4mm thickness safety glass and with opposite opening, complete with fixed handles with double tongue key (interchangeable) and lever closing mechanisms in four points, removable intermediate crosspiece and upright
- Packed separately

**Completion items**

| | |
|---|---|
| Standard and oversized back plates with front and lateral insertion | Pag. 2-64 |
| Cable entry flanges | Pag. 2-57 |
| Plinth covering flanges H=100/200mm and reinforced plinth | Pag. 2-62 |
| Side panels | Pag. 2-55 |
| Crosspieces | Pag. 2-70 |
| 19” rack frames | Pag. 2-85 |
| Lifting eyebolts and reinforcements | Pag. 2-113 |
| Key inserts | Pag. 2-108 |
| Fans, air conditioners | Pag. 2-104 |
| Uprights, panels and DIN rails | Pag. 2-80 |

| **Technical characteristics** | | |
|---|---|---|
| Conformity with Standard | | IEC EN 62208, IEC EN 60439-1, IEC 62208 |
| Degree of protection | | IP65 (IEC 60529) with fixed flanges |
| Degree of mechanical strength | blind door | IK10 (IEC 62262) |
| | glazed door | IK09 (IEC 62262) |
| Colour | internal structure | galvanized white |
| | external panelling | RAL 7035 orange peel |
| | plinth | RAL 7012 orange peel |

# IS2 Enclosures

## Examples of configurations

### Example of completion of pre-assembled structure

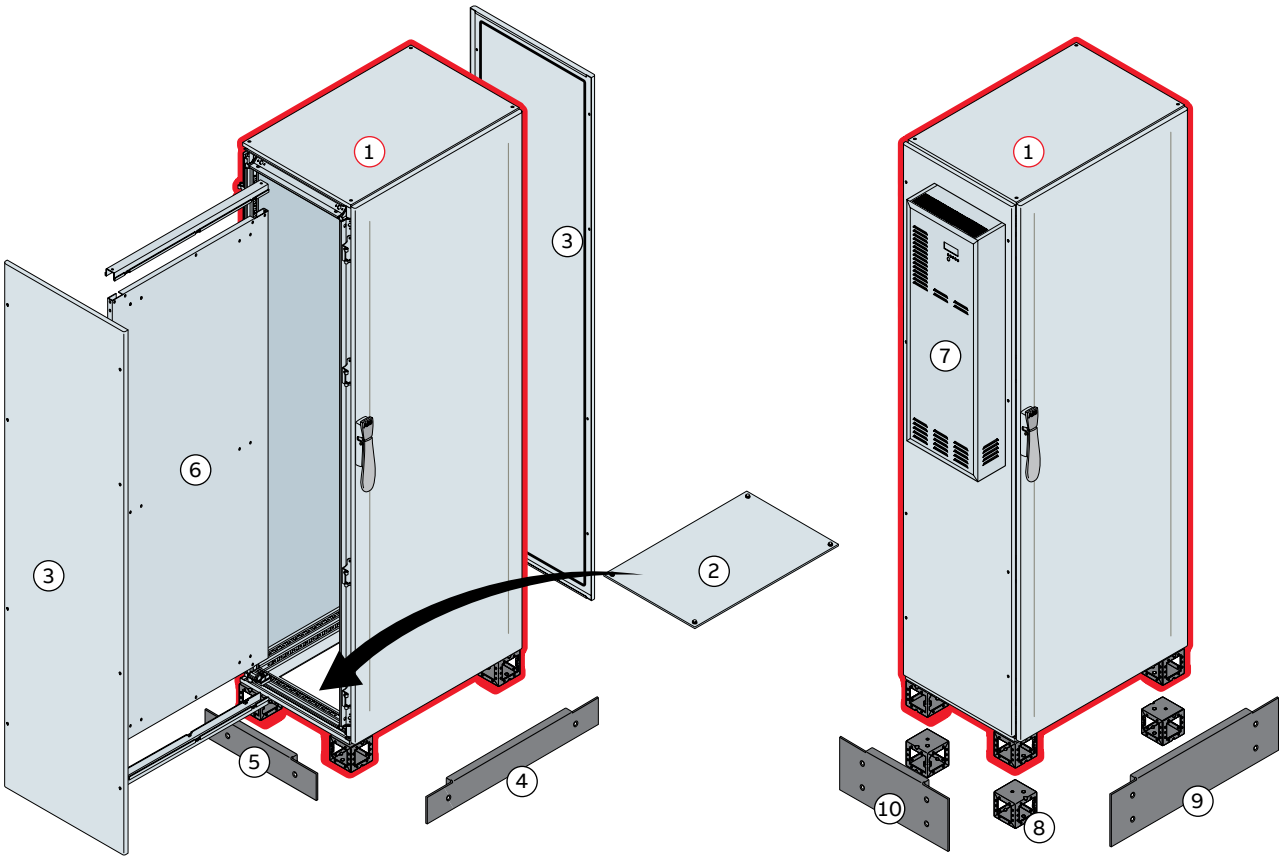


(1) ES2065K

Structure 2000x600x500 (HxWxD) complete with blind door and rear panel

**Completion items**

(2) Structure 2000x600x500 (HxWxD) complete with blind door and rear panel

(3) EL2050K No. 2 side panels

(4) ZN6000 No. 2 plinth flanges H=100mm front/rear

(5) ZN5000 No. 2 plinth flanges H=100mm side

(6) EA2161 Oversize back plate + tracks for lateral insertion

(7) VZ1000K Super thin wall-mounted IP54 air conditioned

(8) ZN1010 No. 4 plinth angle pieces H=100mm

(9) ZN6002 No. 2 plinth flanges H=200mm front/rear

(10) ZN5002 No. 2 plinth flanges H=200mm side

• Quick selection table 2–6 • In-depth technical information page 4–1 • Overall dimensions page 5–1

# IS2 Enclosures

Examples of configurations

## Configuration with compartments

**Configuration with compartments**
The cabinets with configuration with compartments can be constructed starting from pre-assembled structures, or from structure kits. The useful dimension is always 200mm less than the total height of the enclosure.

**Composition of the supply with pre-assembled cabinet**
- Pre-assembled self-supporting structure made of galvanised steel consisting of a closed section drilled with 25mm pitch preset for mounting the compartment cubicles and partial doors.
- Removable roof, plinth H=100mm (consisting of four angle pieces 2,5mm) and rear panel.
- The structures with internal compartment W=200mm are supplied complete with blind door with opposite opening (standard hinging on the left), double box with double tongue key. The structures with internal compartment W=400mm are supplied complete with blind door with opposite opening (standard hinging on the left), handle with double tongue key. Both versions are complete with removable intermediate upright and pair of crosspieces (top/bottom) for fixing the latter.

**Composition of the supply with built-up cabinet**
For construction of the cabinet kits, the base, top, uprights, panelling, doors, plinth flanges, cable entry flanges and internal accessories must be ordered separately.

**Base and top:**
completely pre-assembled by means of 3-way joint complete with plinth angle pieces (2,5mm) H=100mm. Removable roof.

**Uprights:**
made of galvanised steel consisting of a closed section drilled with 25 mm pitch preset for mounting compartment cubicles and partial doors, which can be mounted with just 8 screws at the base/top.

**Rear panel:**
made of 1,5mm thick sheet, fitted with polyurethane gasket.

**Cable container door:**
(2,00mm) opposite opening (standard hinging on the left) complete with double box with double tongue key (interchangeable), crosspiece and intermediate upright to be ordered separately for version with cable containere montante intermedio da ordinare a parte in caso di versione con vano cavi.

## Example of composition of a structure for configuration with compartments

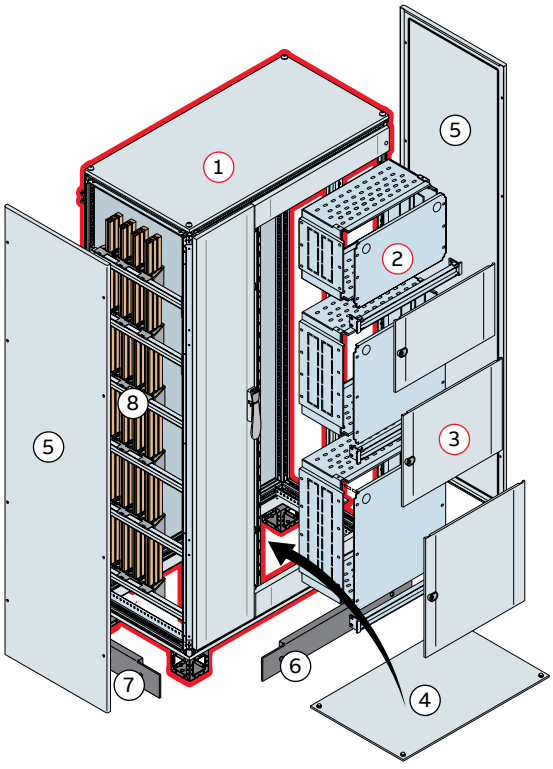


### Composition of pre-assembled structure 2000x800x600 (HxLxP)

1. ES2086MF2K Pre assembled cabinet with cable container and partial blind panels
2. 2 EH.... Cubicles for compartments
3. EH....K Partial front panels for compartments

**Completion items**

4. EF8062 Bottom closure
5. EL2060K No. 2 side panels
6. ZN8000 No. 2 plinth flanges H=100mm front/rear
7. ZN6000 No. 2 plinth flanges H=100mm side
8. Busbar system with shaped section

• Quick selection table 2–6 • In-depth technical information page 4–1 • Overall dimensions page 5–1

# IS2 Enclosures

## Examples of configurations

### Completion items


| | |
|---|---|
| Cubicle for compartments | Pag. 2-78 |
| Partial front doors | Pag. 2-79 |
| Distribution system | Pag. 2-92 |
| Cable entry flanges | Pag. 2-57 |
| Plinth covering flanges H=100/200mm and reinforced plinth | Pag. 2-62 |
| Side panels | Pag. 2-55 |
| Crosspieces | Pag. 2-70 |
| Lifting eyebolts and reinforcements | Pag. 2-113 |
| Key inserts | Pag. 2-108 |


| Technical characteristics | | |
|---|---|---|
| Conformity with Standard | | IEC EN 62208, EN60439-1 - IEC 61439-1-2 |
| Rated service voltage Ue | | up to 690 V |
| Rated insulation voltage Ui | | up to 1000 V |
| Rated impulse withstand voltage Uimp | | 8 kV |
| Rated current In | | up to 1600 A |
| Rated short-time short-circuit withstand | | up to 65 kA |
| Rated peak short-circuit current Ipk | | 143 kA |
| Degree of protection | | IP41 (IEC 60529) |
| Degree of mechanical strength | | IK10 (IEC 62262) |
| Obtainable segregation forms | | up to Form 3a |
| Colour: | internal structure | galvanised white |
| | external panelling | Orange peel RAL 7035 |
| | plinth | Orange peel RAL 7012 |

### Segregated Form 3 PC version

Compartment selection according to the type of circuit-breaker

| Type of circuit-breaker | Installation | H comp. (mm) | Version fixed | Version plug-in |
|---|---|---|---|---|
| Tmax T1 - 3/4P | horizontal | 200 | ✓ | |
| Tmax T2/T3 - 3P | horizontal | 200 | ✓ | ✓ |
| Tmax T2/T3 - 4P | horizontal | 300 | ✓ | ✓ |
| Tmax T3 - 3/4P | vertical | 300 | ✓ | ✓ |
| Tmax T4 - 3P | horizontal | 300 | ✓ | ✓ |
| Tmax T4 - 3/4P | vertical | 400 | ✓ | ✓ |
| Tmax T5 - 3/4P | horizontal | 300 | ✓ | |
| Tmax T5 - 3P | horizontal | 300 | | ✓ |
| Tmax T5 - 4P | horizontal | 400 | | ✓ |
| Tmax T5 - 3/4P (400A) | vertical | 400 | ✓ | ✓ |
| Tmax T5 - 3/4P | vertical | 500 | | ✓ |
| Tmax XT1 - 3/4P | horizontal | 200 | ✓ | ✓ |
| Tmax XT1 - 3/4P | vertical | 300 | ✓ | ✓ |
| Tmax XT2 - 3P | horizontal | 200 | ✓ | ✓ |
| Tmax XT2 - 4P | horizontal | 300 | ✓ | ✓ |
| Tmax XT2 - 3/4P | vertical | 300 | ✓ | ✓ |
| Tmax XT3 - 3P | horizontal | 200 | ✓ | ✓ |
| Tmax XT3 - 4P | horizontal | 300 | ✓ | ✓ |
| Tmax XT3 - 3/4P | vertical | 300 | ✓ | |
| Tmax XT3 - 3/4P | vertical | 400 | | ✓ |
| Tmax XT4 - 3P | horizontal | 200 | ✓ | ✓ |
| Tmax XT4 - 4P | horizontal | 300 | ✓ | ✓ |
| Tmax XT4 - 3/4P | vertical | 300 | ✓ | |
| Tmax XT4 - 3/4P | vertical | 400 | | ✓ |

### MCC version with fixed drawers

Compartment selection according to the type of starting/power

| Type of starter | Power diagram | Power 400-50Hz kW | Power 400-50Hz A | Type of circuit-breaker | Type of contactor | Type of thermal relay | Compartment dimensions HxW mm 200x600 | 200x800 | 300x800 |
|---|---|---|---|---|---|---|---|---|---|
| Direct | 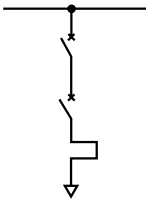 | 0.37÷11 | 1.1÷22 | T2 | A9÷A30 | TA25÷TA42 | ✓ | | |
| | | 15÷45 | 28.5÷83 | T2 | A50÷A95 | TA75÷TA110 | | ✓ | |
| | | 0.37÷11 | 1.1÷22 | XT2 | A9÷A30 | TA25÷TA42 | ✓ | | |
| | | 15÷45 | 28.5÷83 | XT2 | A50÷A95 | TA75÷TA110 | | ✓ | |
| | | 55÷90 | 98÷158 | T3 | A110÷A185 | TA110÷TA200 | | ✓ | |
| | | 55÷90 | 98÷158 | XT3 | A110÷A185 | TA110÷TA200 | | ✓ | |
| | | 110 | 193 | T4 | A210 | TA450/E320 | | | ✓ |
| | | 110 | 193 | XT4 | A210 | TA450/E320 | | | ✓ |
| | | 132÷160 | 232÷282 | T5 | A260÷A300 | TA450/E320 | | | ✓ |
| Star Delta | 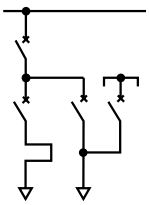 | 18.5÷55 | 36÷98 | T2 | A50÷A26÷A75÷A40 | TA75 | ✓ | | |
| | | 18.5÷55 | 36÷98 | XT2 | A50÷A26÷A75÷A40 | TA75 | ✓ | | |
| | | 75÷110 | 135÷193 | T3 | A95÷A75÷A145÷A95 | TA110÷TA200 | | ✓ | |
| | | 75÷110 | 135÷193 | XT3 | A95÷A75÷A145÷A95 | TA110÷TA200 | | ✓ | |
| | | 132 | 232 | T4 | A145÷A110 | TA200 | | | ✓ |
| | | 132 | 232 | XT4 | A145÷A110 | TA200 | | | ✓ |
| | | 160÷200 | 282÷349 | T5 | A210÷A145÷A210÷A185 | TA200÷TA450 | | | ✓ |

• Quick selection table 2–6 • In-depth technical information page 4–1 • Overall dimensions page 5–1

# IS2 Enclosures

## Examples of configurations

### Construction of modular configurations

Making up configurations with DIN panels and rails is possible by means of the pre-assembled cabinet or cabinet Kit solution.
The useful dimension is always 100mm less than the total height of the enclosure.

**Composition of the supply with pre-assembled cabinet**

- Pre-assembled self-supporting structure made of galvanised steel consisting of a closed section drilled with 25mm pitch preset for mounting the modular uprights.
- Removable roof, plinth H=100mm (consisting of four angle pieces 2,5mm) and rear panel.
- Blind door made of 2,00mm thick sheet, fitted with polyurethane gasket, complete with ergonomic handle and other types of inserts, see page 2-108. Reversible (standard hinging on the right) with 4 closure points and complete with internal reinforcement frame for W≥600mm and earthing pins.
- Glazed door made of 2,00mm thick sheet, with 4mm thickness safety glass, fitted with polyurethane gasket, complete with fixed handle with double tongue key interchangeable with other types of inserts, see page 4/108. Reversible (standard hinging on the right) with 4 closure points and complete with earthing pins.
- The structures with internal cable container W=200mm are supplied complete with blind door with opposite opening (standard hinging on the left), double box with double tongue key. The structures with internal cable container W=400mm are supplied complete with blind door with opposite opening (standard hinging on the left), handle with double tongue key. Both versions are complete with removable intermediate upright.

**Composition of the supply with built-up cabinet**
For construction of the cabinet kits, the base, top, uprights, panelling, doors, plinth flanges, cable entry flanges and internal accessories must be ordered separately.

**Base, top and plinth:**
completely pre-assembled by means of a 3-way joint complete with plinth angle pieces (2,5mm ) H=100mm. Removable roof.

**Uprights:**
made of galvanised steel consisting of a closed section drilled with 25 mm pitch preset for mounting compartment cubicles and partial doors, which can be mounted with just 8 screws at the base/top

**Rear panel:**
made of 1,5mm thick sheet, fitted with polyurethane gasket

**Cable container door**
The doors for internal cable container W=200mm with opposite opening (standard hinging on the left) are complete with double box with double tongue key. The doors for internal cable container W=400mm with opposite opening (standard hinging on the left) are complete with handle with double tongue key. Both versions require the removable intermediate upright

**Completion items**

| | |
|---|---|
| Uprights for apparatus | Pag. 2-80 |
| DIN rails and modular panels | Pag. 2-80 |
| Distribution system | Pag. 2-92 |
| Cable entry flanges | Pag. 2-57 |
| Plinth covering flanges H=100/200mm and reinforced plinth | Pag. 2-62 |
| Side panels | Pag. 2-55 |
| Crosspieces | Pag. 2-70 |
| Lifting eyebolts and reinforcements | Pag. 2-113 |
| Key inserts | Pag. 2-108 |

| **Technical characteristics** | | |
|---|---|---|
| Conformity with Standard | | IEC 62208<br>IEC 60439-1, IEC 61439-1-2 |
| Rated service voltage Ue | | up to 690 V |
| Rated insulation voltage Ui | | up to 1000 V |
| Rated impulse withstand voltage Uimp | | 8 kV |
| Rated current In | | up to 1600 A |
| Rated short-time short-circuit withstand | | up to 65 kA |
| Rated peak short-circuit current Ipk | | 143kA |
| Degree of protection | | IP65 (IEC 60529) |
| Degree of mechanical strength | | IK10 (IEC 62262) |
| Obtainable segregation forms | | IK09 (IEC 62262) |
| Colour: | internal structure | galvanised white |
| | external panelling | Orange peel RAL 7035 |
| | plinth | Orange peel RAL 7012 |

# IS2 Enclosures

## Examples of configurations

### Example of composition of a structure for power factor correction

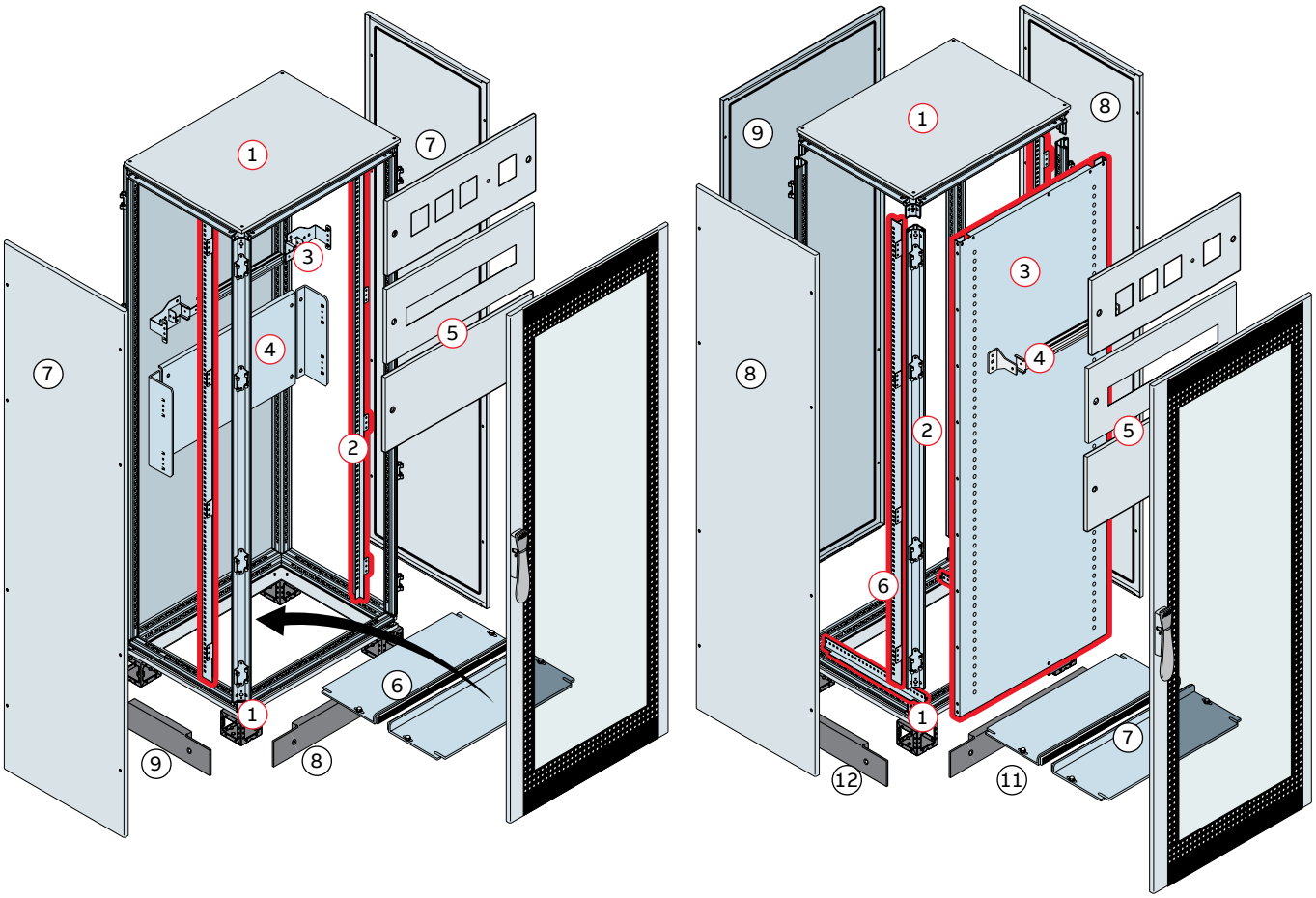


### Composition of pre-assembled structure 2000x600x600 (HxWxD) for apparatus

1. Composition of pre-assembled structure 2000x600x600 (HxWxD) for apparatus
2. EH2000 Uprights for apparatus
3. EH0018 Kit for modular apparatus
4. EH.... Blind back plates for apparatus
5. EH....K Blind front panels, with cut-outs for modular items and instrument holder

**Completion items**

6. EF6060 Cable entry sliding flanges
7. EL2060K No. 2 side panels
8. ZN6000 No. 2 plinth flanges H=100mm front/rear
9. ZN6000 No. 2 plinth flanges H=100mm side

### Composition of pre-assembled structure 2000x600x600 (HxWxD) for apparatus

1. CEK6050K Base top
2. EM2000 Uprights
3. EX2060 Oversized back plate
4. EH1018 Kit for modular apparatus
5. EH....K Blind front panels with cut-outs for modular items and instruments holder
6. EH2000 Kit for modular apparatus

**Completion items**

7. EF6050 Cable entry sliding flanges
8. EL2050K No. 2 side panels
9. EP2060K Rear panel
10. ET2060K Glazed door
11. ZN6000 No. 2 plinth flanges H=100mm front/rear
12. ZN5000 No.2 plinth flanges H=100mm side

• Quick selection table 2–6 • In-depth technical information page 4–1 • Overall dimensions page 5–1

# IS2 Enclosures

## Examples of configurations



### Constructing the 19” rack structures

Making up the 19” rack structures is possible by means of the pre-assembled or cabinet Kit solution, using a rack 19” with “L” profile or a rack 19” with cranked shaped frame profile.

**Composition of the supply with pre-assembled cabinet**

- Pre-assembled self-supporting structure made of galvanised steel consisting of a closed section drilled with 25mm pitch.
- Removable roof, plinth H=100mm (consisting of four angle pieces 2,5mm) and rear panel.
- Blind door made of 2,00mm thick sheet, fitted with polyurethane gasket, complete with handle with double tongue key interchangeable with other types of inserts, see page 2-108. Reversible (standard hinging on the right) with 4 closure points and complete with internal reinforcement frame and earthing pins.
- Glazed door made of 2,00mm thick sheet, with 4mm thickness safety glass, fitted with polyurethane gasket, complete with handle with double tongue key interchangeable with other types of inserts, see page 2-108. Reversible (standard hinging on the right) with 4 closure points and complete with earthing pins.

**Composition of the supply with built-up cabinet**
For construction of the cabinet kits, the base, top, uprights, panelling, doors, plinth flanges, cable entry flanges and internal accessories must be ordered separately.

**Base, top and plinth:**
completely pre-assembled by means of 3-way joint complete with plinth angle pieces (2,5mm) H=100mm. Removable roof.

**Uprights:**
made of galvanised steel consisting of a closed section drilled with 25mm pitch preset for mounting the rack frames.

**19” rack frame with “L” profile:**
rmade of galvanised steel, this is able to support a maximum load of 90kg, and is available in the fixed and swing versions.
It can hold 38 to 47 HE in the fixed version, 36 to 45 HE in the swing version and 9 to 27 HE in the partial version. The structure is completed with the aluminium dummy panels.

**Rear panel:**
made of 1,5mm thick sheet, fitted with polyurethane gasket.

**Completion items**


| | |
|---|---|
| 19” rack frames with “L” profile | Pag. 2-85 |
| 19” fixed rack frames with cranked shaped profile | Pag. 2-86 |
| 19” swing rack frames with “C” shaped profile | Pag. 2-87 |
| Accessories | Pag. 2-90 |
| Dummy panels | Pag. 2-89 |
| Cable entry flanges | Pag. 2-57 |
| Plinth covering flanges H=100/200mm and reinforced plinth | Pag. 2-62 |
| Side panels | Pag. 2-55 |
| Crosspieces | Pag. 2-70 |
| Lifting eyebolts and reinforcements | Pag. 2-113 |
| Key inserts | Pag. 2-108 |


| Technical characteristics | | |
|---|---|---|
| Conformity with Standard | | IEC 62208, IEC 60439-1, IEC 61439-1-2 |
| Degree of protection | | IP65 (IEC 60529) with fixed flanges |
| Degree of mechanical strength | blind door | IK10 (IEC 62262) |
| | glazed door | IK09 (IEC 62262) |
| Colour | internal structure | galvanised white |
| | external panelling | Orange peel RAL 7035 |
| | plinth | Orange peel RAL 7012 |

# IS2 Enclosures

## Examples of configurations

### Example of composition of a structure with 19” rack frame

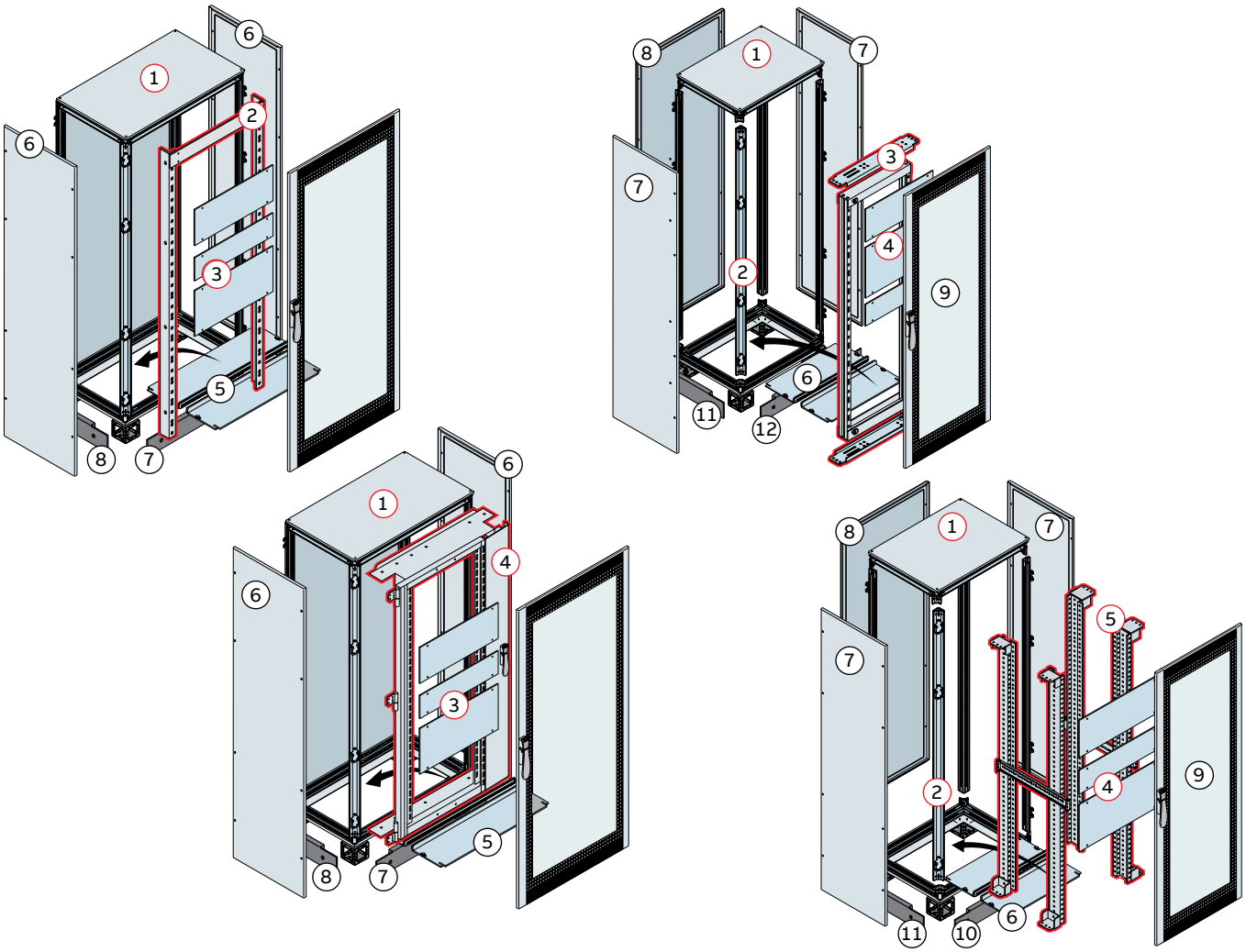


### Making up a pre-assembled structure 2000x800x600 (HxWxD) for 19” rack frames

1. ES2086VK Pre-assembled cabinet with glazed door
2. EG2080 Telaio rack fisso con profilo a “L”
3. EG.... Panels for rack frame
4. EG2004K Swing “C” shaped rack frame and EV0007 kit for fixing swing rack frame “C” shaped

**Completion items**

5. EF8060 Cable entry sliding flanges
6. EL2060K No.2 blind side panels
7. ZN8000 No. 2 plinth flanges H=100mm front/rear
8. ZN6000 No. 2 plinth flanges H=100mm side

### Composition of a structure Kit 2000x600x500 (HxWxD) for 19” rack frames

1. EK6050K Base top
2. EM2000 Uprights
3. EG2001K Centred swing rack frame
4. EG.... Panels for rack frame
5. EG2005 Cranked shape uprights EB6000 kit for fixing and EB0500 crosspieces

**Completion items**

6. EF6050 Cable entry sliding flanges
7. EL2050K No. 2 side panels
8. EP2060K Rear panel
9. ET2060K Glazed door
10. ZN6000 No. 2 plinth flanges H=100mm front/rear
11. ZN5000 No.2 plinth flanges H=100mm side

• Quick selection table 2–6 • In-depth technical information page 4–1 • Overall dimensions page 5–1

# IS2 Enclosures

## Examples of configurations

### Construction of cabinet kits

For construction of the cabinet kits, the base, top, uprights, paneling, door, plinth flanges, cable entry flanges and internal accessories must be ordered separately.

**Components to be ordered:**
**Base, top and plinth:**
completely pre-assembled by means of 3-way joint complete with plinth angle pieces (2,5mm) H=100mm; removable roof.

**Uprights:**
made of galvanised steel consisting of a closed section drilled with 25 mm pitch, which can be mounted with just 8 screws at the base/top.

**Rear/side panel:**
made of 1,5mm thick sheet, fitted with polyurethane gasket.

**Blind door:**
made of 2,00mm thick sheet, fitted with polyurethane gasket, complete with fixed handle with double tongue key.
Reversible with 4 closing points, and complete with internal reinforcement frame for W≥600mm and earthing pins.

**Glazed door:**
made of 2,00mm thick sheet with 4 mm thickness safety glass, fitted withpolyurethane gasket, complete with handle with double tongue key interchangeable with other types of inserts.
Reversible with 4closure points and complete with earthing pins.

**Cable container door:**
(2,00mm) opposite opening (standard hinging on the left) complete with double box with double tongue key (interchangeable),
intermediate removable crosspiece and upright.

**Completion items**

| | |
|---|---|
| Standard and oversized back plates with front and lateral insertion | Pag. 2-64 |
| Cable entry flanges | Pag. 2-57 |
| Plinth covering flanges H=100/200mm and reinforced plinth. | Pag. 2-62 |
| Crosspieces | Pag. 2-70 |
| 19” rack frames | Pag. 2-85 |
| Lifting eyebolts and reinforcements | Pag. 2-113 |
| Key inserts | Pag. 2-108 |
| Fans, air conditioners | Pag. 2-104 |
| Uprights, panels and DIN rails | Pag. 2-80 |

| **Technical characteristics** | | |
|---|---|---|
| Conformity with Standard | | IEC 62208<br>IEC 60439-1, IEC 61439-1-2 |
| Degree of protection | | IP65 (IEC 60529) with fixed flanges |
| Degree of mechanical strength | blind door | IK10 (IEC 62262) |
| | glazed door | IK09 (IEC 62262) |
| Colour | internal structure | galvanised white |
| | external panelling | Orange peel RAL 7035 |
| | plinth | Orange peel RAL 7012 |

• Quick selection table 2–6 • In-depth technical information page 4–1 • Overall dimensions page 5–1

# IS2 Enclosures

## Examples of configurations

### Example of composition of a structure Kit

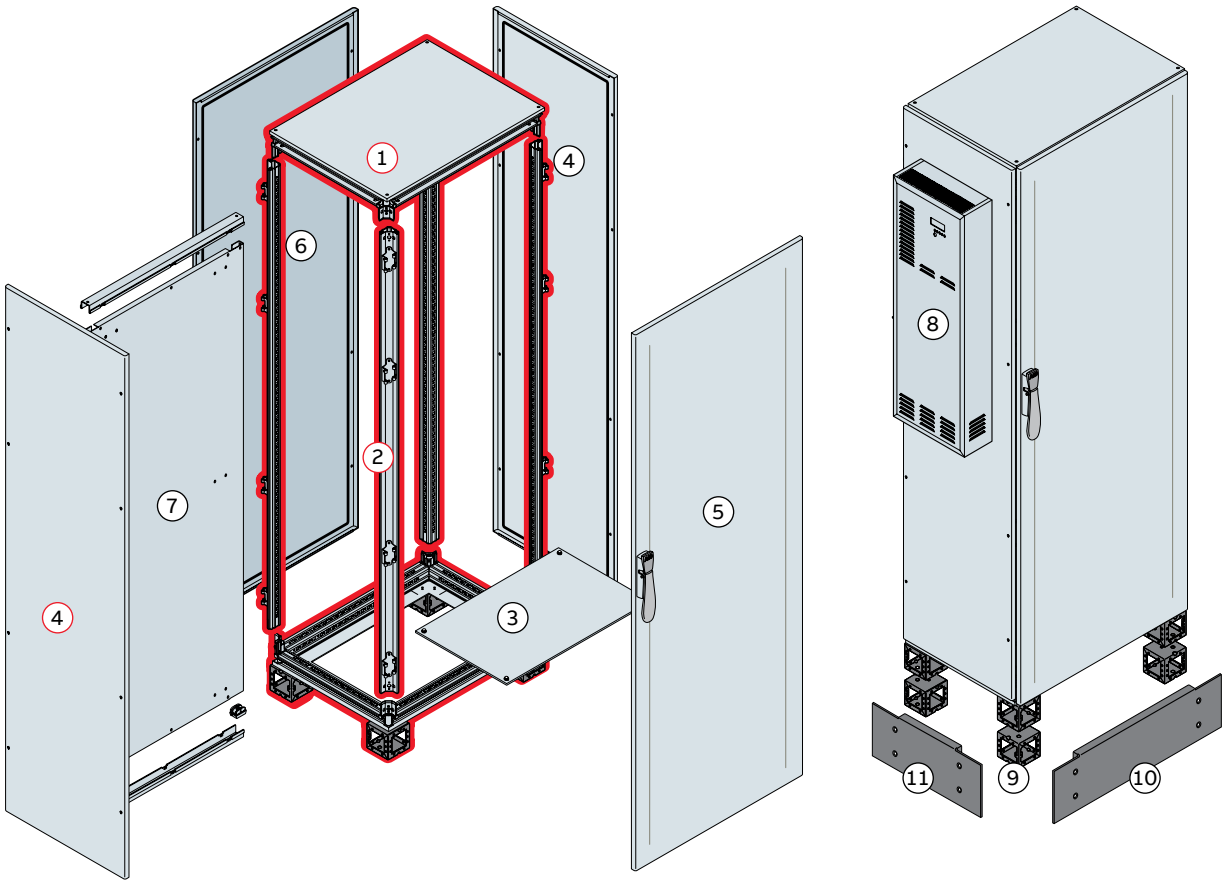


### Composition of a structure 2000x600x500 (HxWxD)

1. EK6050K Base, top and plinth
2. EM2000 N°4 uprights

**Completion items**

3. EF6052 Bottom closure
4. EL2050K No. 2 side panels
5. EC2060K Blind door
6. EP2060K Rear panel
7. EA2161 Oversized back plate + tracks for lateral insertion
8. VZ1850K Super thin wall air conditioner IP54
9. ZN1010 No. 4 plinth angle pieces H=100mm
10. ZN6002 No. 2 plinth flanges H=200mm front/rear
11. ZN5002 No. 2 plinth flanges H=200mm side

• Quick selection table 2–6 • In-depth technical information page 4–1 • Overall dimensions page 5–1

# IS2 Enclosures

## Examples of configurations - Pre-assembled structures

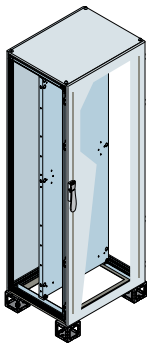

IS2 series pre-assembled structure dim.: 1800x600x400mm HxWxD (1905x594x410mm external), IP65 with blind door, back plate and plinth H=100mm (side panels, cable entry flanges and plinth flanges excluded).

| Description | Code | Q.ty |
|---|---|---|
| Blind door cabinet 1800x600x400mm | ES1864K | 1 |
| Back plate 1800x600mm (HxW) | EA1860 | 1 |

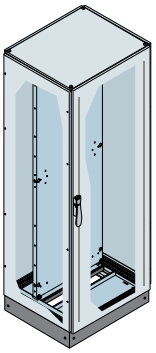

IS2 series pre-assembled structure dim.: 1800x600x500mm HxWxD (1905x610x510mm external), IP65 with blind door, back plate, side panels, cable entry flanges and plinth flanges H=100mm.

| Description | Code | Q.ty |
|---|---|---|
| Blind door cabinet 1800x600x500mm | ES1865K | 1 |
| Back plate 1800x600mm (HxW) | EA1860 | 1 |
| No.2 blind side panels 1800x500mm (HxD) | EL1850K | 1 |
| No.2 plinth flanges W=600mm | ZN6000 | 1 |
| No.2 plinth flanges D=500mm | ZN5000 | 1 |
| Sliding cable entry flanges 600x500mm | EF6050 | 1 |

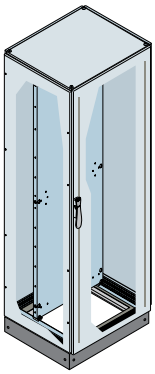

IS2 series pre-assembled structure dim.: 2000x600x500mm HxWxD (2105x610x510mm external), IP65 with blind door, back plate, side panels, plinth and flange H=100mm (cable entry flanges excluded)

| Description | Code | Q.ty |
|---|---|---|
| Blind door cabinet 2000x600x500mm | ES2065K | 1 |
| Back plate 2000x600mm (HxW) | EA2060 | 1 |
| No.2 blind side panels 2000x500mm (HxD) | EL2050K | 1 |
| No.2 plinth flanges W=600mm | ZN6000 | 1 |
| No.2 plinth flanges D=500mm | ZN5000 | 1 |

• Quick selection table 2–6 • In-depth technical information page 4–1 • Overall dimensions page 5–1

# IS2 Enclosures

## Examples of configurations - Pre-assembled structures

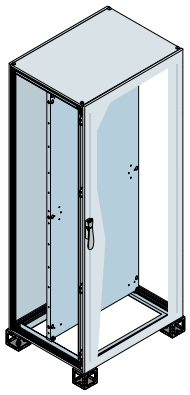

IS2 series pre-assembled structure dim.: 2000x800x600mm HxWxD (2105x794x610mm external), IP65 with blind door, back plate and plinth H=100mm (flange excluded)

| Description | Code | Q.ty |
|---|---|---|
| Blind door cabinet 2000x800x600mm | ES2086K | 1 |
| Back plate 2000x800mm (HxW) | EA2080 | 1 |

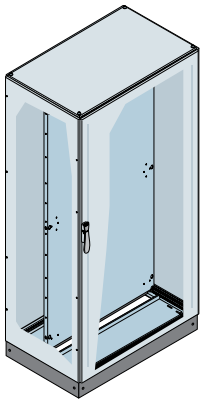

IS2 series pre-assembled structure dim.: 2000x1000x600mm HxWxD (2105x1010x610mm external), IP65 with blind door, back plate, side panels, sliding cable entry flanges and plinth H=100mm (flanges included)

| Description | Code | Q.ty |
|---|---|---|
| Blind door cabinet 2000x1000x600mm | ES2006K | 1 |
| No.2 blind side panels 2000x600mm (HxD) | EL2060K | 1 |
| Sliding flanges 1000x600mm | EF1060 | 1 |
| No.2 plinth flanges W=1000mm | ZN1000 | 1 |
| No.2 plinth flanges D=600mm | ZN6000 | 1 |

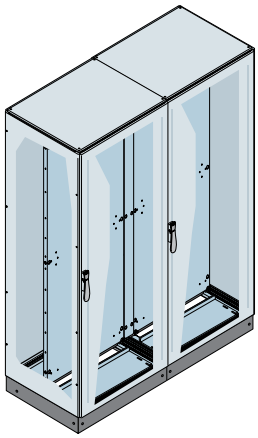

No.2 IS2 series pre-assembled structures dim.: 2000x600x600mm HxWxD (2105x1204x610mm external), IP65 with blind door, back plate, side panels, sliding cable entry flanges, structure/plates and plinth joining kit H=100mm (flanges included).

| Description | Code | Q.ty |
|---|---|---|
| Blind door cabinet 2000x600x600mm | ES2066K | 2 |
| Back plate 2000x600mm (HxW) | EA2060 | 2 |
| No.2 blind side panels 2000x600mm (HxD) | EL2060K | 1 |
| Sliding flanges 600x600mm | **EF6060** | 2 |
| Back plate joining kit H=2000mm | **EA2000** | 1 |
| Kit for joining cabinets | EV0003 | 1 |
| No.2 plinth flanges W=600mm | ZN6000 | 3 |

• Quick selection table 2–6 • In-depth technical information page 4–1 • Overall dimensions page 5–1

# IS2 Enclosures

## Examples of configurations - Pre-assembled structures

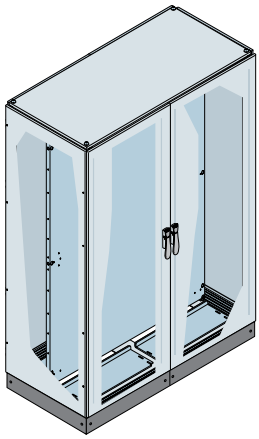

IS2 series pre-assembled structure dim.: 2000x1200x600mm HxWxD (2105x1210x610mm external), IP65 with blind door, back plate, side panels, sliding cable entry flanges and plinth H=100mm (flanges included).

| Description | Code | Q.ty |
|---|---|---|
| Cabinets with blind door 2000x1200x600mm | ES2026K | 1 |
| Black plate 2000x1200mm (HxW) | EA2013 | 1 |
| No.2 side blind panels 2000x600mm (HxD) | EL2060K | 1 |
| Sliding flanges 600x600mm | EF6060 | 2 |
| No.2 plinth flanges W=600mm | ZN6000 | 3 |

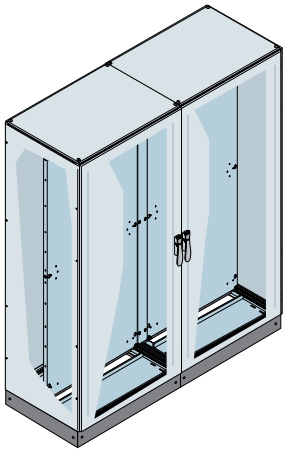

No.2 IS2 series pre-assembled structures dim.: 2000x800x600mm HxWxD (2105x1604x610mm external), IP65 with blind door, back plate, side panels, sliding cable entry flanges, structure/plates and plinth joining kit H=100mm (flanges included).

| Description | Code | Q.ty |
|---|---|---|
| Blind door cabinet 2000x800x600mm | ES2086K | 2 |
| Back plate 2000x800mm (HxW) | EA2080 | 2 |
| Back plate joining kit H=2000mm | EA2000 | 1 |
| No.2 blind side panels 2000x600mm (HxD) | EL2060K | 1 |
| Sliding flanges 800x600mm | EF8060 | 2 |
| Kit for joining cabinets | EV0003 | 1 |
| No.2 plinth flanges W=800mm | ZN8000 | 2 |
| No.2 plinth flanges D=600mm | ZN6000 | 1 |

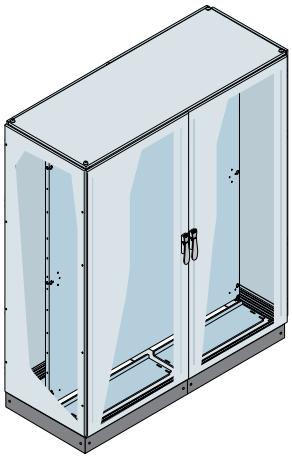

IS2 series pre-assembled structure dim.: 2000x1600x600mm HxWxD (2105x1610x610mm external), IP65 with blind door, back plate, side panels, sliding cable entry flanges and plinth H=100mm (flanges included).

| Description | Code | Q.ty |
|---|---|---|
| Blind door cabinet 2000x1600x600mm | ES2076K | 1 |
| Back plate 2000x1600mm (HxW) | EA2016 | 1 |
| No.2 blind side panels 2000x600mm (HxD) | EL2060K | 1 |
| Sliding flanges 800x600mm | EF8060 | 2 |
| No.2 plinth flanges W=800mm | ZN8000 | 2 |
| No.2 plinth flanges D=600mm | ZN6000 | 1 |

• Quick selection table 2–6 • In-depth technical information page 4–1 • Overall dimensions page 5–1

# IS2 Enclosures

## Examples of configurations - Pre-assembled structures

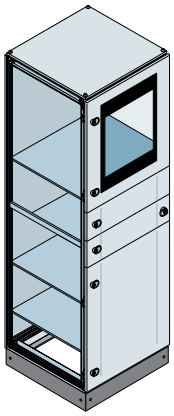

IS2 series pre-assembled structure dim.: 2000x600x600mm HxWxD (2105x610x610mm external), IP65 PC version with glazed door for monitor, keyboard shelf, CPU module, side panels and plinth H=100mm (flanges included)

| Description | Code | Q.ty |
|---|---|---|
| Cabinet for computer 2000x600x600mm | ES2066PCK | 1 |
| No.2 blind side panels 2000x600mm (HxD) | EL2060K | 1 |
| No.2 plinth flanges W=600mm | ZN6000 | 2 |

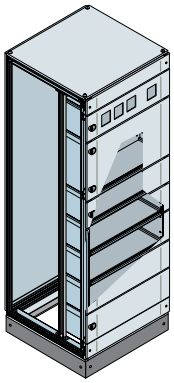

IS2 series pre-assembled structure dim.: 1800x600x600mm HxWxD (1805x594x610mm external), IP65 version with Form 3 segregated compartments, with instrument panel and blind doors for PC-MCC, plinth H=100mm (flanges included)

| Description | Code | Q.ty |
|---|---|---|
| Cabinet with compartments 1800x600x600mm (HxWxD) | ES1864VK | 1 |
| No.2 plinth flanges 100x600mm (HxW) | ZN6000 | 1 |
| Back plate x compartments 400x600mm (HxW) | EH1800 | 1 |
| Back plate x compartments 200x600mm (HxW) | EH2272K | 1 |
| Panel for No.2 72x72 instruments - 200x600mm(HxW) | EH3063K | 1 |
| Front panel for compartments 400x600mm (HxW) | EH0018 | 6 |
| Front panel for compartments 200x600mm (HxW) | EH6018K | 2 |
| No.2 flange zoccolo 100x400mm (hxl) | ZN4000 | 1 |



IS2 series pre-assembled structure dim.: 1800x800x400mm HxWxD (1805x794x410mm external), IP65 version with Form 3 segregated compartments, cable riser W=200mm, with instrument panel and blind doors for PC-MCC, plinth H=100mm (flanges included)

| Description | Code | Q.ty |
|---|---|---|
| Cabinet with compartments1800x800x400+cable cont. W=200 | ES1884MF2K | 1 |
| Back plate x compartments 400x600mm (hxw | EH4063 | 1 |
| Back plate x compartments 300x600mm (hxw | EH3060 | 2 |
| Back plate x compartments 200x600mm (HxW) | EH2060 | 3 |
| Panel for No.2 72x72 instruments - 200x600mm(HxW) | EH7262K | 1 |
| Front panel for compartments 200x600mm (HxW) | EH2061K | 2 |
| Front panel for compartments 300x600mm (HxW) | EH3061K | 2 |
| Front panel for compartments 400x600mm (HxW) | EH4061K | 1 |
| No.2 plinth flanges 100x800mm (HxW) | ZN8000 | 1 |
| No.2 plinth flanges 100x400mm (HxW) | ZN4000 | 1 |

• Quick selection table 2–6 • In-depth technical information page 4–1 • Overall dimensions page 5–1

# IS2 Enclosures

## Examples of configurations - Pre-assembled structures



IS2 series pre-assembled structure dim.: 1800x1000x400mm HxWxD (1805x994x410mm external), IP65 version with Form 3 segregated compartments, cable riser W=400mm, with instrument panel and blind doors for PC-MCC, plinth H=100mm (flanges included).

| Description | Code | Q.ty |
|---|---|---|
| Cabinet with compartments1800x1000x400+ cable container W=400 | ES1804MF4K | 1 |
| Back plate x compartments 400x600mm (HxW) | EH4063 | 1 |
| Back plate x compartments 300x600mm (HxW) | EH3060 | 2 |
| Back plate x compartments 200x600mm (HxW) | EH2060 | 3 |
| Panel for No.2 72x72 instruments - 200x600mm (HxW) | EH7262K | 1 |
| Front panel for compartments 200x600mm (HxW) | EH2061K | 2 |
| Front panel for compartments 300x600mm (HxW) | EH3061K | 2 |
| Front panel for compartments 400x600mm (HxW) | EH4061K | 1 |
| No.2 plinth flanges 100x1000mm (HxW) | ZN1000 | 1 |
| No.2 plinth flanges 100x1000mm (HxW) | ZN4000 | 1 |

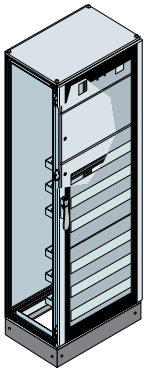

IS2 series pre-assembled structure dim.: 1800x600x400mm HxWxD (1805x594x410mm external), IP65 modular version, with instrument panel and glazed door, DIN panels, plinth H=100mm (flanges included).

| Description | Code | Q.ty |
|---|---|---|
| Glazed door cabinet 1800x600x400mm | ES1864VK | 1 |
| No.2 plinth flanges 100x600mm (HxW) | ZN6000 | 1 |
| No.2 uprights H=1800mm x DIN panels | EH1800 | 1 |
| Panel for No.2 72x72 instruments - 200x600mm(HxW) | EH2272K | 1 |
| Blind panel 300x600mm (HxW) | EH3063K | 1 |
| DIN rail W=600mm (18 mod.)+front supp. | EH0018 | 6 |
| Panel 3x18 DIN mod. 600x600mm (HxW) | EH6018K | 2 |
| No.2 plinth flanges100x400mm (HxW) | ZN4000 | 1 |

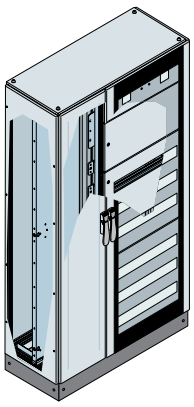

IS2 series mounted structure, dimensions: 1800x1200x400mm HxWxD (1805x1210x410mm external), IP65 modular version with cable riser W=400mm, instrument panel, DIN panels, cabling on mounting plate and plinth H=100mm (flanges included).

| Description | Code | Q.ty |
|---|---|---|
| Cabinet+Cable container W=400 transparent door 1800x1200x400 | ES1824VC4K | 1 |
| No.2 plinth flanges 100x600mm (HxW) | ZN6000 | 2 |
| No.2 plinth flanges 100x400mm (HxW) | ZN4000 | 1 |
| Back plate for bench cabling 1800x800mm (HxW) | EX1880 | 1 |
| DIN rail l=800mm (18 mod)+ rear support | GD1530 | 6 |
| Panel x No.2 instruments 72x72- 200x800mm (HxW) | EH3272K | 1 |
| Blind panel 300x800mm (HxW) | EH3082K | 1 |
| Panel 3x18 DIN mod. 600x800mm (HxW) | EH6029K | 2 |
| No.2 blind side panels 1800x400mm (HxD) | EL1840K | 1 |
| No.2 rails for sliding back plate | EB4101 | 1 |
| No.2 uprights for modular apparatus | EH1800 | 1 |

• Quick selection table 2–6 • In-depth technical information page 4–1 • Overall dimensions page 5–1

# IS2 Enclosures

## Examples of configurations - Pre-assembled structures

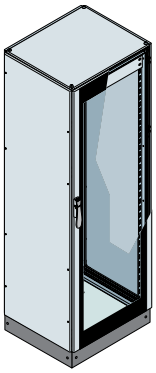

IS2 series pre-assembled structure dim.: 2000x600x500mm HxWxD (2105x610x510mm external), IP65 version 19” rack with 42 fixed HE, side panels, glazed door, plinth H=100mm (flanges included).

| Description | Code | Q.ty |
|---|---|---|
| Glazed door cabinet 2000x600x500mm | ES2065VK | 1 |
| 19” rack frame 2000x600mm 42 fixed HE | EG2000 | 1 |
| No.2 blind side panels 2000x500mm (HxD) | EL2050K | 1 |
| No.2 plinth flanges 100x600mm (HxW) | ZN6000 | 1 |
| No.2 plinth flanges 100x500m m (HxW) | ZN5000 | 1 |

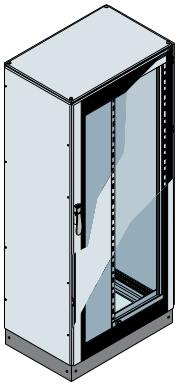

IS2 series mounted structure dim.: 2000x800x500mm HxWxD (2105x810x510mm external), IP65 19” 40 HE swing offcentre rack version, side panels, transparent door, plinth H=100mm (flanges included).

| Description | Code | Q.ty |
|---|---|---|
| Cabinet with transparent door 2000x800x500mm | ES2085VK | 1 |
| 40HE swing off-centre rack frame 2000x800mm | EG2003K | 1 |
| No.2 blind side panels 2000x500mm (HxD) | EL2050K | 1 |
| No.2 plinth flanges 100x800mm (HxW) | ZN8000 | 1 |
| No.2 plinth flanges 100x500mm (HxW) | ZN5000 | 1 |

• Quick selection table 2–6 • In-depth technical information page 4–1 • Overall dimensions page 5–1

# IS2 Enclosures

## Examples of configurations - Built-up structures

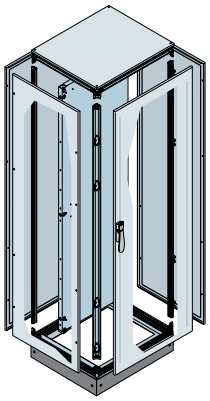

IS2 series structure kit dim.: 2000x600x500mm HxWxD (2105x610x510mm external), IP65 with blind door, back plate, side panels, plinth and flange H=100mm (cable entry flanges excluded).

| Description | Code | Q.ty |
|---|---|---|
| Base/Top 600x500mm (WxD) | EK6050KN | 1 |
| No.4 uprights H=2000mm | EM2000 | 1 |
| Back plate 2000x600mm (HxW) | EA2060 | 1 |
| No.2 blind side panels 2000x500mm (HxD) | EL2050K | 1 |
| No.2 plinth flanges W=600mm | ZN6000 | 1 |
| No.2 plinth flanges D=500mm | ZN5000 | 1 |
| Blind door 2000x600mm (HxW) | EC2060K | 1 |
| Rear panel 2000x600mm (HxW) | EP2060K | 1 |

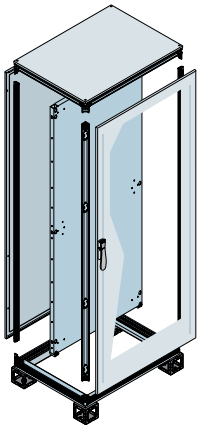

IS2 series structure kit dim.: 2000x800x600mm HxWxD (2105x794x610mm external), IP65 with blind door, back plate and plinth H=100mm (flange excluded).

| Description | Code | Q.ty |
|---|---|---|
| Base/Top 800x600mm (WxD) | EK8060KN | 1 |
| No.4 uprights H=2000mm | EM2000 | 1 |
| Back plate 2000x800mm (HxW) | EA2080 | 1 |
| Blind door 2000x800mm (HxW) | EC2080K | 1 |
| Rear panel 2000x800mm (HxW) | EP2080K | 1 |

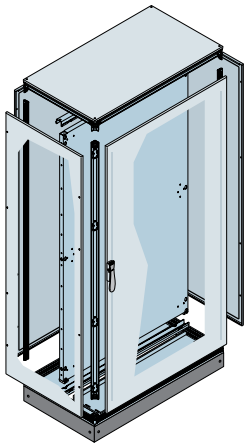

IS2 series structure kit dim.: 2000x1000x600mm HxWxD (2105x1010x610mm external), IP65 with blind door, oversized back plate, side panels, sliding cable entry flanges and plinth H=100mm (flanges included).

| Description | Code | Q.ty |
|---|---|---|
| Base/Top 1000x600mm (WxD) | EK1060KN | 1 |
| No.4 uprights H=2000mm | EM2000 | 1 |
| Oversized back plate+tracks 2000x1000mm(HxW) | EA2110 | 1 |
| No.2 blind side panels 2000x600mm (HxD) | EL2060K | 1 |
| Sliding flanges 1000x600mm | EF1060 | 1 |
| No.2 plinth flanges W=1000mm | ZN1000 | 1 |
| No.2 plinth flanges D=600mm | ZN6000 | 1 |
| Blind door 2000x1000mm (HxW) | EC2012K | 1 |
| Rear panel 2000x1000mm (HxW) | EP2010K | 1 |

• Quick selection table 2–6 • In-depth technical information page 4–1 • Overall dimensions page 5–1

# IS2 Enclosures

## Examples of configurations - Built-up structures

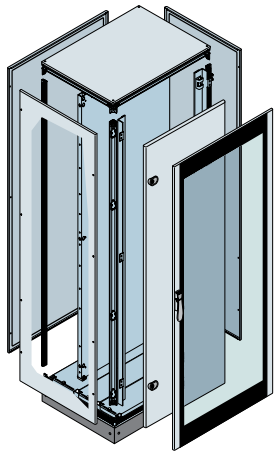

IS2 series structure kit dim.: 2200x800x600mm HxWxD (2305x810x610mm external), IP65 with glazed door, Inner door, back plate, side panels, removable cable entry flanges and plinth H=100mm (flanges included).

| Description | Code | Q.ty |
|---|---|---|
| Base/Top 800x600mm (WxD) | EK8060KN | 1 |
| No.4 uprights H=2200mm | EM2200 | 1 |
| No.2 blind side panels 2200x600mm (HxD) | EL2260K | 1 |
| Glazed door 2200x800mm (HxW) | ET2280K | 1 |
| Inner door 2200x800mm (HxW) | EE2280K | 1 |
| Back plate 2200x800mm (HxW) | EA2280 | 1 |
| Removable flanges 800x600mm | EF8061 | 1 |
| No.2 plinth flanges W=800mm | ZN8000 | 1 |
| No.2 plinth flanges D=600mm | ZN6000 | 1 |
| Rear panel 2200x800mm (HxW) | EP2280K | 1 |

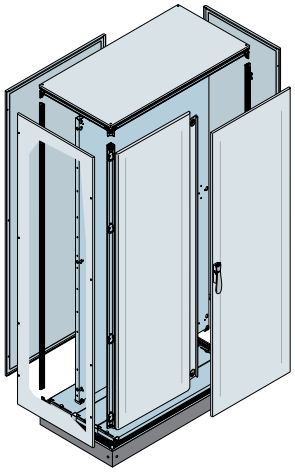

IS2 series structure kit dim.: 2000x1000x600mm HxWxD (2105x1010x610mm external), IP65 with double doors closing with overlap, back plate, side panels, built-up cable entry flanges and plinth H=100mm (flanges included).

| Description | Code | Q.ty |
|---|---|---|
| Base/Top 1000x600mm (WxD) | EK1060KN | 1 |
| No.4 uprights H=2000mm | EM2000 | 1 |
| No.2 blind side panels 2000x600mm (HxD) | EL2060K | 1 |
| Blind door for double door version | EC2080FC5K | 1 |
| Blind door with overlap | ED2010SK | 1 |
| Back plate 2000x1000mm (HxW) | EA2010 | 1 |
| Removable flanges 1000x600mm | EF1061 | 1 |
| No.2 plinth flanges W=1000mm | ZN1000 | 1 |
| No.2 plinth flanges D=600mm | ZN6000 | 1 |
| Rear panel 2000x1000mm (HxW) | EP2010K | 1 |

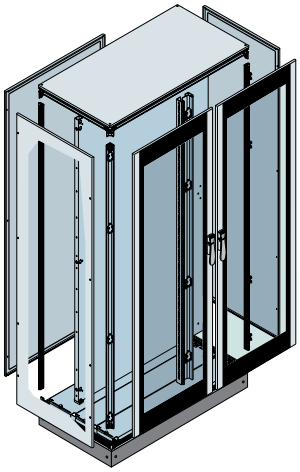

IS2 series structure kit dim.: 2000x1200x600mm HxWxD (2105x1010x610mm external), IP65 with double doors closing with overlap on intermediate upright, back plate, side panels, built-up cable entry flanges and plinth H=100mm (flanges included).

| Description | Code | Q.ty |
|---|---|---|
| Base/Top 1000x600mm (WxD) | EK1260KN | 1 |
| No.4 uprights H=2000mm | EM2000 | 1 |
| No.2 blind side panels 2000x600mm (HxD) | EL2060K | 1 |
| Glazed door for double door version | EC2080FV6K | 2 |
| Intermediate upright H=2000mm | EM2001 | 1 |
| Pair of intermediate crosspieces | EB6100 | 1 |
| Back plate 2000x1000mm (HxW) | EA2013 | 1 |
| Removable flanges 1000x600mm | EF6061 | 2 |
| No.2 plinth flanges D=600mm | ZN6000 | 3 |
| Rear panel 2000x1200mm (HxW) | EP2012K | 1 |

• Quick selection table 2–6 • In-depth technical information page 4–1 • Overall dimensions page 5–1

# IS2 Enclosures EMC
## General characteristics and applications

The range of IS2 enclosures has been enriched with the EMC (Electromagnetic Compatibility) version.
The new version has undergone shielding efficiency tests with success according to the MIL STD 285: 1956 Standard.

This series of products is suitable for making small and mediumsized electric switchboards installed on the floor, whose range is available in 4 different dimensions:

- height 2000mm
- width 600 and 800mm
- depth 600 and 800mm
- version: with blind door/glazed door

The electromagnetic compatibility problem also requires attention when selecting enclosures andcabinets.

The increased number of components in the operation and regulation electronics and
the high processing speeds of signals increasingly often leave a possibility of introducing errors which can be attributed to electromagnetic interference.

These interferences may be caused continuously, periodically or at random, from internal or external sources, which generate electric, magnetic or electromagnetic fields.

The suitability tests according to MIL STD 285: 1956 (“Attenuation measurements for enclosures, electromagnetic shielding, for electronic test purposes, method of”) have confirmed conformity of the IS2 metalwork structures with the requirements of the standard.

The attenuation level (measured in dB) remains at high levels for a wide spectrum of frequencies (from 30MHz to 10GHz).

The steel sheet enclosures are particularly suited to making EMC version operating mechanisms and plants.

The enclosure is painted both externally and internally to guarantee greater resistance to oxidation.

The standard colour is orange peel RAL7035.

The range of IS2 EMC enclosures is characterized by the IP54 degree of protection, tested and checked according to the EN 60529 Standard.

Special attention has been paid in selecting the conductible materials for the gaskets and in making the conductive connection, as free of holes and slots as possible which can considerably reduce the efficiency value of the cabinet shielding.

The high shielding characteristics are such as to allow the use of the IS2 EMC enclosures in the telephone, aerospace, naval, medical, military and information technology fields, as well as in all uses where there are active components sensitive to electromagnetic pollution.



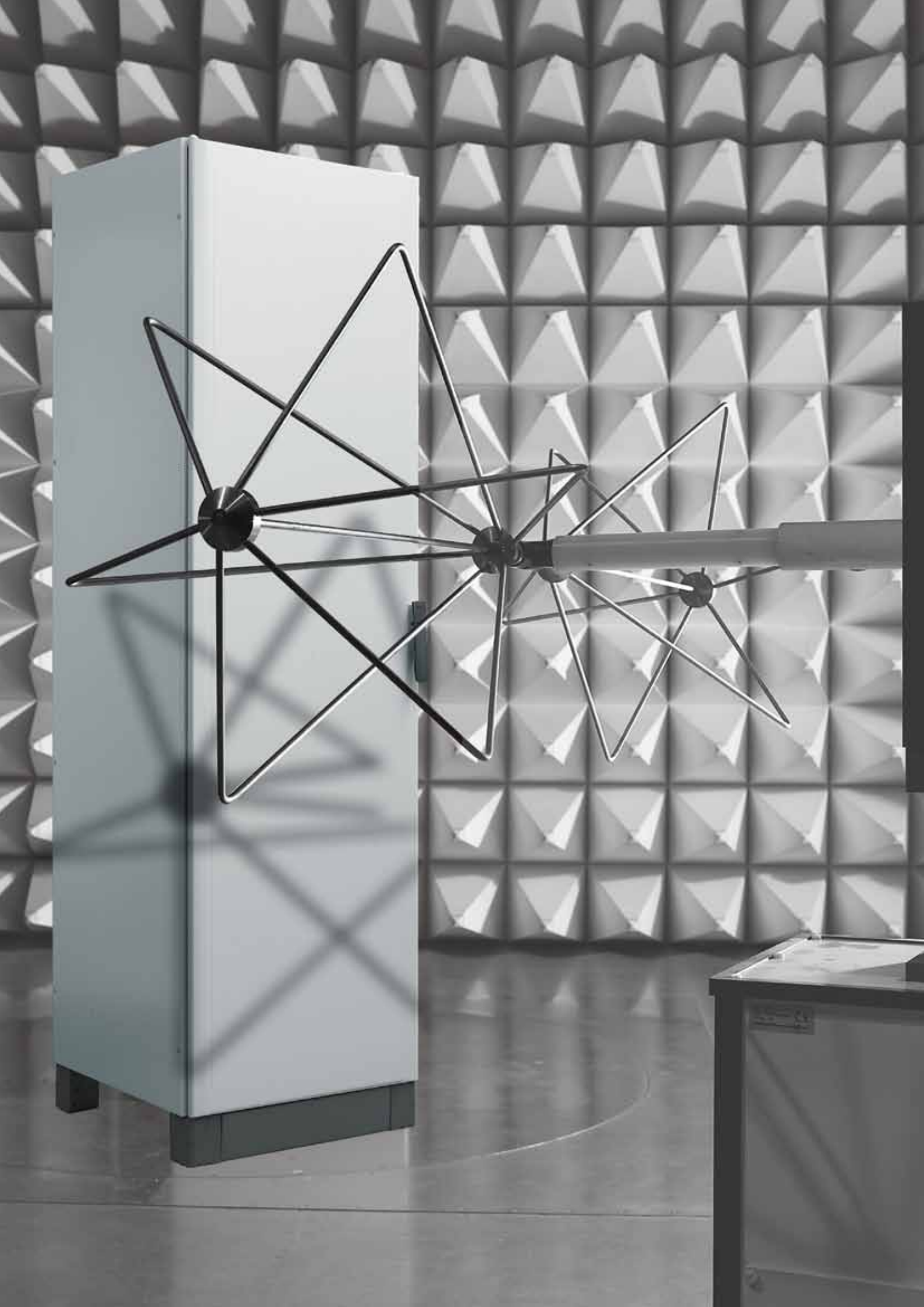

# IS2 Enclosures EMC
## General characteristics and applications

Front doors with 120° opening made of galvanized and painted steel sheet 2,00mm thick.
They have an internal conductive gasket made of neoprene foam coated with a conductive cloth.

**Structure**

- Made of galvanized steel sheet.
- Painted steel panelling 1,5mm thick and 2,00mm doors.
- IP54 degree of protection verified according to the IEC 60529 Standard.
- Galvanized sheet internal plate 2,5mm thick. The plate can be adjusted in depth with a pitch of 25mm.
- Placing two or more structures side by side is possible using a special conductive basket able to guarantee both the degree of protection and continuity of the conductive electrical parts.

**Door**

- Front doors with 120° opening made of galvanized and painted steel sheet 2,00mm thick. They have an internal conductive gasket made of neoprene foam coated with a conductive cloth. The blind doors are fitted with an internal tube section which increases the rigidity and allows simple assembly of wiring ducts and other accessories. The standard opening is from left to right, with the possibility of modification (inverting the assembly and changing the direction the handle opens).
  The glazed door is made up of standard glass, metallic mesh and hardened glass 3mm thick. The metallic mesh, placed between the two pieces of glass, guarantees high electromagnetic shielding thanks to contact with the metallic part of the door.
- Lock with double tongue insert and hooking device with four closing points.
- Screwed rear panel, made of galvanized and painted steel sheet 1,5mm thick. It has an internal conductive gasket made of neoprene foam coated with a conductive cloth.
  The panel can be removed and replaced with a door.





- Internal Inner door made of galvanized painted steel sheet 2,00mm thick, fixed onto a pair of internal uprights and positioned at a distance of 74mm from the external front door. The door and the side panels can be fitted with natural and forced ventilation kits, which are EMC approved as well.

The IS2 EMC enclosures can be fitted with modular panel accessories in widths 600 and 800mm made of steel sheet 1,5mm thick.

**Distribution enclosure**

- The modular panels are available in the version with DIN cut-out for one or three rows of modular apparatus, in the blind version and for measuring instruments 72x72mm and 96x96mm. All the panels have 200mm vertical modularity and are available in the fixed or hinged (using an accessory) version.
  The panels with 600mm wide DIN cut-out allow installation of 18 or 24 DIN modules, whereas those 800mm wide allow installation of 29 or 36 DIN modules according to whether the wiring duct is placed at the front or rear in relation to the DIN rail. Installation of the modular panels in the IS2 enclosures requires the use of special uprights for modular panels which are screwed onto the enclosure structure. The useful space for installation of the modular panels is always 100mm less than the nominal dimension of the cabinet.
  The DIN rails are ordered separately and the kit includes the rail, the supports and the small fixing items.
  Finally, the modular galvanized internal plates are available (in the 600 and 800mm widths and in the 200, 300 and 400mm heights). The modular plates are fixed using a kit of side crosspieces to be ordered separately according to the depth of the enclosure.

**Cable entry and plinth**

- The cable entry flanges re of the sliding type and are fitted with a basket coated with a special conductive netting to limit dispersions as far as possible even in the areas with possible openings.

- Palletisable plinths made up of four angle pieces H=100mm already fixed to the base of the structure.
  The four closing flanges must be ordered separately.



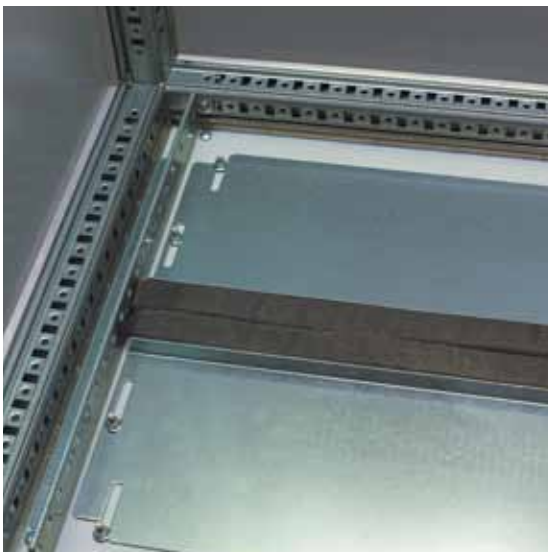

# IS2 Enclosures EMC
## General characteristics and applications

For the range of IS2 EMC enclosures, the uprights with the section dedicated to mounting the panels and 19” Rack accessories are available, destined for various applications such as installation of electronic cards or to make small enclosures for local networks (LAN).

**Enclosure with 19” rack frame**

- The fixed 19” rack uprights, swing type and of partial height are made of galvanized sheet 2,00mm thick and are applied onto the structure of the IS2 enclosures with 600-800mm width using special screws: it is possible to install up to a maximum of 40 HE vertical modules.
The buffer panels are available with dimensions up to 20 HE modules, are blind and made of opaque natural colour anodized aluminium 3,00mm thick.



### Attenuation values

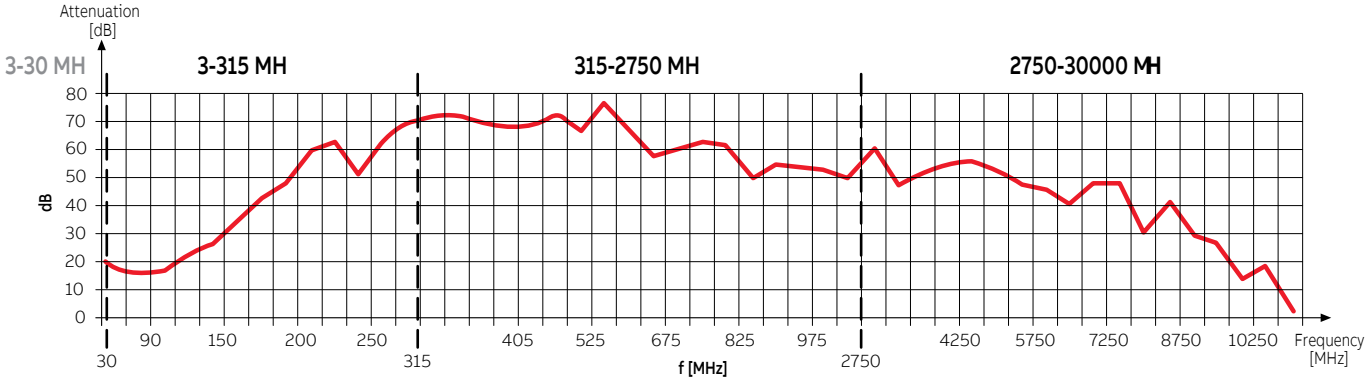


| **Technical characteristics** | | |
|---|---|---|
| Conformity with the Standard | | IEC 62208 |
| Degree of protection | | IP54 (IEC 60529) |
| Operating climate (t°/rh%) | costant | 23°C/83% - 40°C/93% |
| | variable | 23°C/98% - 40°C/98% |
| Type of material | | Metallic |
| **Installation site** | | Indoors |
| Fixing method | | floor |
| Normal service conditions<br>- ambient temperature | | da –5 a +40°C |

# IS2 Enclosures EMC
## Selection of the structure

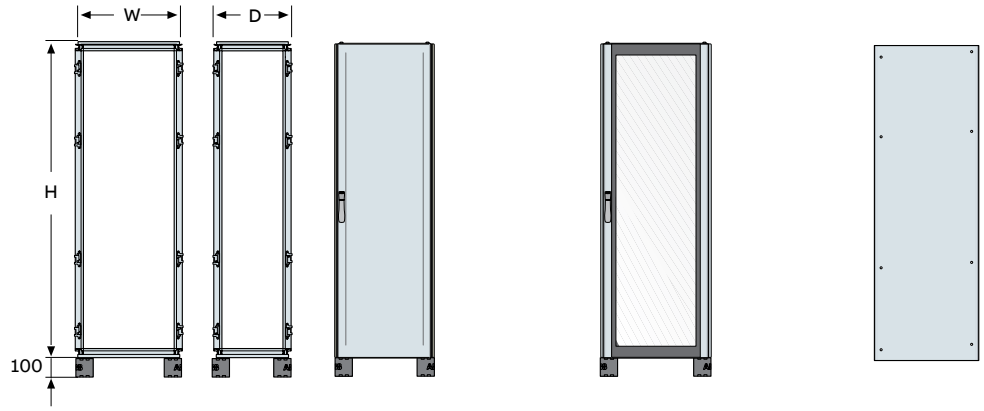


**Dimensions (mm)**

| H | W | D | Cabinet with blind door | Cabinet with blind door | Blind side panel IP54 |
|---|---|---|---|---|---|
| 2000 | 600 | 600 | ES2066EMCK | ES2066VEMCK | 2 x EL2060EMCK |
| | **800** | | ES2086EMCK | ES2086VEMCK | |
| | **600** | 800 | ES2068EMCK | ES2068VEMCK | 2 x EL2080EMCK |
| | **800** | | ES2089EMCK | ES2089VEMCK | |

**Versions available**
- Cabinet with blind/glazed door
- Enclosure with fixed and swing 19” rack frame
- Distribution enclosure with DIN rails and panels

• Quick selection table 2–142 • In-depth technical information page 4–1 • Overall dimensions page 5–1

# IS2 Enclosures EMC

## Ordering codes - Pre-assembled structures

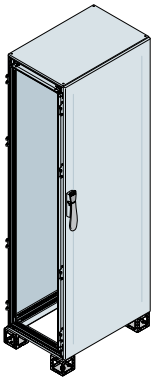

### IP54 - EMC Cabinets with blind door

Structure with removable roof complete with blind door, screwed-on rear panel, sliding fair-lead flanges and plinth H=100mm made up of four angle pieces. Painted orange peel RAL 7035 colour inside/outside. To be completed with plinth flanges, cable tightening plates, side panels and internal equipment.

| | Dimensions (mm) | | | Package/ No. of pieces |
|---|---|---|---|---|
| Description | H | WxD | Code | |
| Cabinet with blind door | 2000 | 600x600 | ES2066EMCK | 1/1 |
| Cabinet with blind door | | 800x600 | ES2086EMCK | 1/1 |
| Cabinet with blind door | | 600x800 | ES2068EMCK | 1/1 |
| Cabinet with blind door | | 800x800 | ES2089EMCK | 1/1 |



### IP54 - EMC Cabinets with glazed door

Structure with removable roof complete with glazed door, screwed-on rear panel, sliding fairlead flanges and plinth H=100mm made up of four angle pieces. Painted orange peel RAL 7035 colour inside/outside. To be completed with plinth flanges, cable tightening plates, side panels and internal equipment.

| | Dimensions (mm) | | | Package/ No. of pieces |
|---|---|---|---|---|
| Description | H | WxD | Code | |
| Cabinet with glazed door | 2000 | 600x600 | ES2066VEMCK | 1/1 |
| Cabinet with glazed door | | 800x600 | ES2086VEMCK | 1/1 |
| Cabinet with glazed door | | 600x800 | ES2068VEMCK | 1/1 |
| Cabinet with glazed door | | 800x800 | ES2089VEMCK | 1/1 |

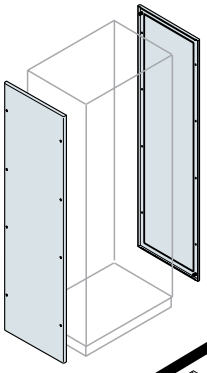

### IP54 - EMC Blind side panel

Panel made of sheet 1,5mm thick, fitted with polyurethane gasket, painted orange peel RAL 7035 colour inside/outside, complete with earthing pins.

| | Dimensions (mm) | | | Package/ No. of pieces |
|---|---|---|---|---|
| Description | H | D | Code | |
| Blind side panel | 2000 | 600 | EL2060EMCK | 1/1 |
| Blind side panel | | 800 | EL2080EMCK | 1/1 |

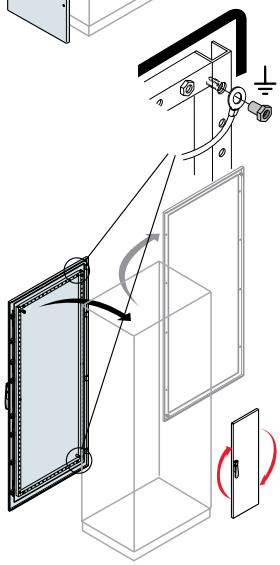

### Replacement of rear panel with door

The supply consists in replacing the rear panel with a blind/glazed door mounted directly in the factory.

| | Dimensions (mm) | | | Custom Made Service | Package/ No. of pieces |
|---|---|---|---|---|---|
| Description | H | D | Code | | |
| Replacement of rear panel with blind door | 2000 | 600 | EC2060EMCKM | ✓ | 1/1 |
| Replacement of rear panel with blind door | | 800 | EC2080EMCKM | ✓ | 1/1 |
| Replacement of rear panel with blind door | | 600 | ET2060EMCKM | ✓ | 1/1 |
| Replacement of rear panel with blind door | | 800 | ET2080EMCKM | ✓ | 1/1 |

✓ The “Custom Made Service” is valid only for structures assembled at the factory, for more information please contact your local sales network.

• Quick selection table 2–141 • In-depth technical information page 4–1 • Overall dimensions page 5–1

# IS2 Enclosures EMC

## Ordering codes - Completion of structures

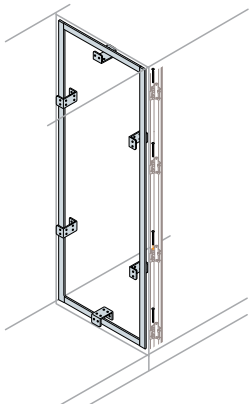

**Kit for joining cabinets - EMC**

The kit consists of 6 squares and adhesive EMC conductive gasket. Joining is made from the inside by means of the 6 squares which can be mounted for the full height or depth of the enclosure.

| Description | Code | Package/ No. of pieces |
|---|---|---|
| Kit for joining EMC cabinets | EV0006EMC | 1/1 |

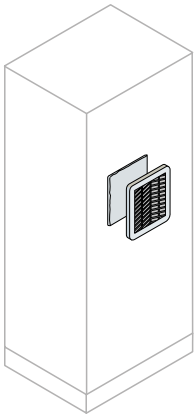

**IP21/54 shielded EMC natural ventilation Kit**

Grilles made of insulating material (PC/ABS self-extinguishing UL94V-0) RAL7035 colour, complete with filter cloth with high dust accumulation capacity (600g/m2), able to reduce maintenance interventions (cleaning by washing with water or beating). IP21 degree of protection without filter, IP54 with filter, fitted with pre-mounted EMC tightness gasket.

| | Dimensions (mm) | | | |
|---|---|---|---|---|
| Description | W | W | Code | Package/ No. of pieces |
| Panel + air passage filter kit | 150 | 150 | EN0150EMCK | 1/1 |
| Panel + air passage filter kit | 250 | 250 | EN0250EMCK | 1/1 |

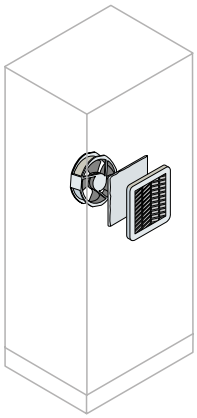

**IP54 shielded EMC forced ventilation Kit**

Grilles made of insulating material (PC/ABS self-extinguishing UL94V-0), RAL7035 colour, complete with filter cloth with high dust accumulation capacity (600g/m2), able to reduce maintenance interventions (cleaning by washing with water or beating). IP54 degree of protection with filter, fitted with pre-mounted EMC tightness gasket. Operating temperature -20 °C + 70 °C, noise 50 dB (A). The fans allow reversible flow of air by means of the fan rotation.

| Description | Consumption (W) | Power ($m^3/h$) | Dimensions (mm) W | W | Code | Package/ No. of pieces |
|---|---|---|---|---|---|---|
| **With fan at 230V - IP54** | | | | | | |
| Grille+air passage filter Kit | 20 | 57 | 150 | 150 | EN1150EMCK | 1/1 |
| Grille+air passage filter Kit | 59 | 240 | 250 | 250 | EN1250EMCK | 1/1 |
| **With fan at 115V - IP54** | | | | | | |
| Grille+air passage filter Kit | 20 | 57 | 150 | 150 | EN2150EMCK | 1/1 |
| Grille+air passage filter Kit | 59 | 240 | 250 | 250 | EN2250EMCK | 1/1 |

**To complete the structure, see accessories from page 2-56**

## Chapter 3
Wiring ducts

**General characteristics**

**3**–2 **Halogen free wiring ducts with vertical slots**

**3**–3 **Thermoplastic wiring ducts with vertical slots**

**3**–4 **Flexible thermoplastic wiring ducts**

**Ordering codes**

**3**–5 **Halogen free wiring ducts with vertical slots**

**3**–6 **Thermoplastic wiring ducts with vertical slotsi**

**3**–7 **Flexible thermoplastic wiring ducts**

**3**–8 **Accessoires**

# **Wiring ducts**
# General characteristics

Halogen-free thermoplastic material in compliance with VDE 0472 Part 815 Standard: Br + Cl < 0.2 %, F < 0.1 %

- colour RAL 7035 grey
- halogen-free thermoplastic material in compliance with VDE 0472 Part 815 Standard: Br + Cl < 0.2 %, F < 0.1 %
- smoke toxicity index: 18.0 according to NF X70-100 and NF
- F16-101 Standards
- smoke opacity index*: Dm 377.0 (2.3 mm) V0F4 386.2 (2.3 mm) in compliance with NF X10-702 Standard (reference NF F16-101)* in the event of fire, it is extremely important for the smoke opacity level to be as low as possible during the first 4 minutes in order to allow people to move away from the areas of risk
- on the basis of the values obtained during the smoke opacity and toxicity tests, the material falls within class F2 (in compliance with NF F16-101 Standard)
- in conformity with the UNI EN ISO 11925-2 Standard (test with use of a single flame)
- insulating, shock-proof, self-extinguishing material in compliance with UL 94 V0 Standard and resistant to abnormal heat and fire up to 850°C (glow wire test) in compliance with IEC 695-2-1 Standard
- dimensional stability from -40 to +100 °C
- resistant to acids, oils and greases
- absence of burrs, rounded internal edges
- dimensions and resilience of ribs guarantee repeated splaying during the wiring phase controlled splaying of sides for guaranteeing a perfect seal of the cover in vertical sections and in the case of high temperatures
- two prearranged trimming lines: one line at the basis of ribs in order to remove them by bending them towards the outside direction and another line at the basis of the wall in order to cut the edge when two connection ducts are used
- cable holder mouldings halfway along the straight section of the ribs in 80 mm high ducts
- standard 2-metre length trunkings comply with the EN 50085-2-3 European Standard
- fields of application: residential, industrial and commercial
- compliance to RoHS directive

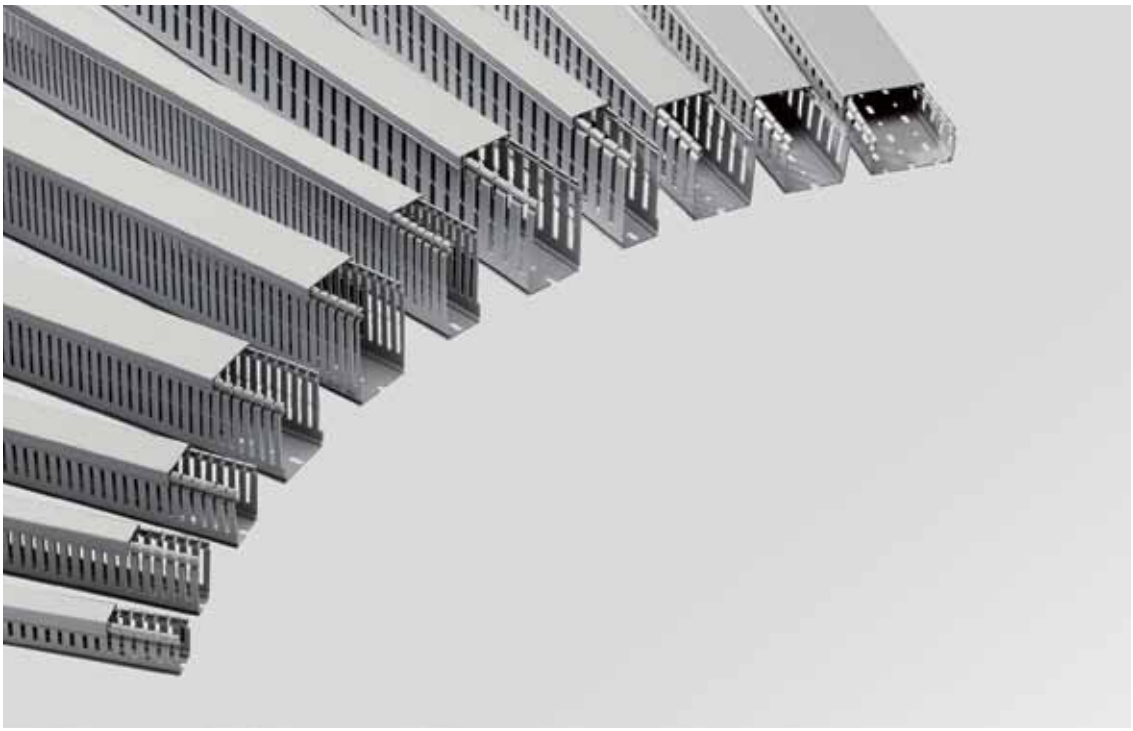

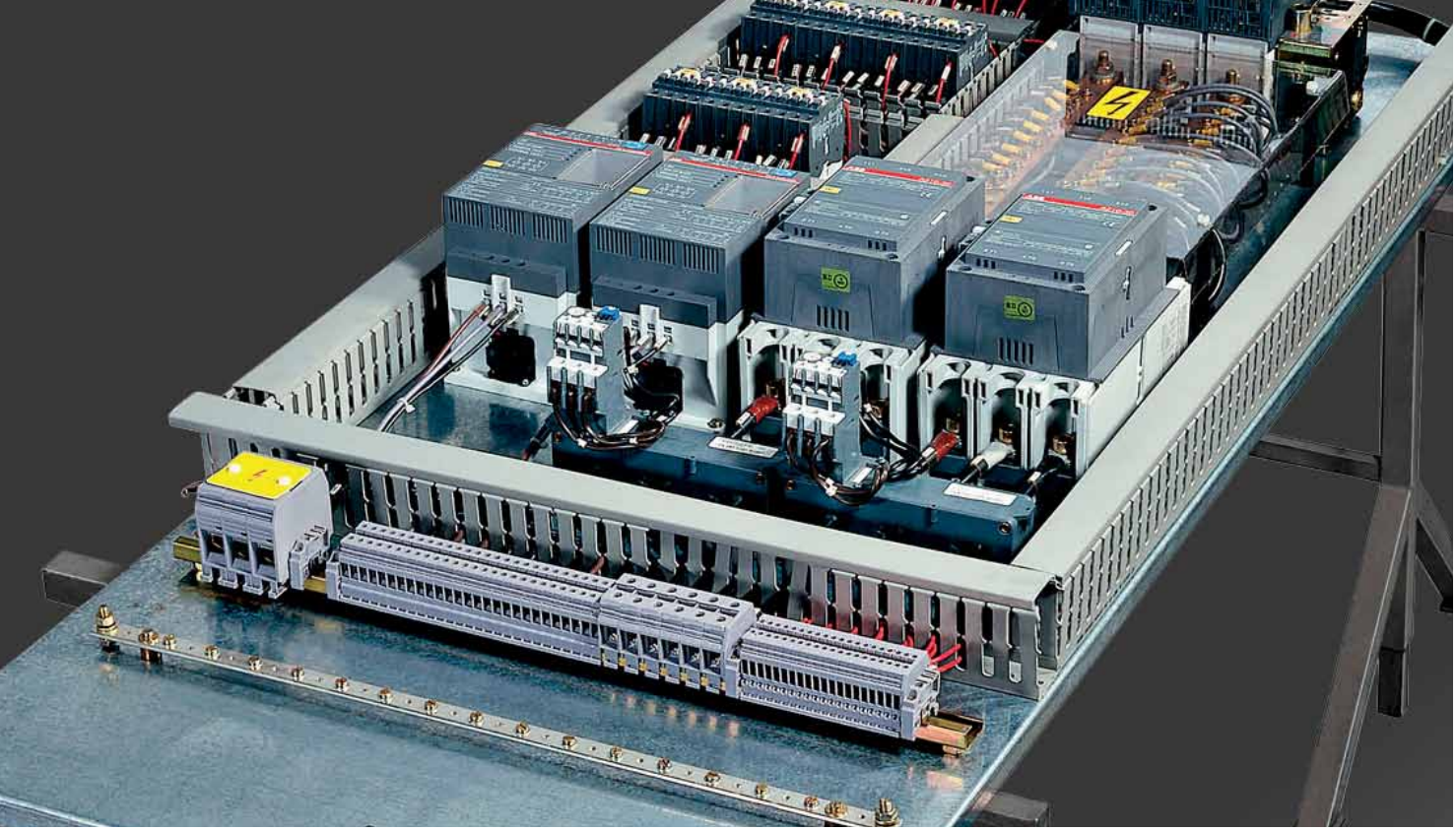



—

Thermoplastic wiring ducts with vertical slots.
Plastic, insulating, shock-proof, selfextinguishing material in compliance with UL 94 V0 Standard and resistant to abnormal heat and fire up to 960 °C (glow wire test) in compliance with IEC 695-2-1 Standard

- colour RAL 7030 grey
- minimum storage/transport temperature -5 °C
- minimum installation and usage temperature -15 °C
- maximum usage temperature +60 °C
- resistant to acids, oils and greases
- no burr, rounded-off inner edges
- new rib profile makes it easy to open and close the cover and guarantees that it clips on more safely
- designed to snap onto the Fix-O-rapid special accessory, suitable to be fastened both to DIN rail and base plate
- the ribs are cut using a special pressing process (rounding of the edges) producing wiring ducts completely free of burr and rough edges
- the dimensions and resilience of the ribs ensure repeated splaying during cabling
- controlled splaying of sides to ensure a perfect seal of the cover in the vertical sections and at high temperatures
- double trimming line, one at the base of the ribs so that they can be removed by bending them outwards and one at the base of the lateral sides so that the edge can be cut when two wiring ducts are branched
- cable holder mouldings half-way up the straight section of the ribs in 80 and 100-mm high wiring ducts
- cover can be opened without having to use a special tool
- can be mounted on horizontal or vertical surfaces even when the cover is on the bottom
- standard 2-metre length
- industrial application
- compliance to RoHS directive

# **Wiring ducts**
# General characteristics

Flexible thermoplastic wiring ducts. Suitable for connecting panels and doors with compass-opening mechanisms and in general for applications where cabling is subject to bending and twisting.

- colour RAL 7040 grey
- plastic, insulating, shock-proof, self-extinguishing material in compliance with UL 94 V2 Standard and resistant to permanent temperature of 80 °C and peaks up to 110 °C in compliance with IEC 216 Standards
- resistant to acids, oils and greases
- ribs alternate and angle slightly inwards to make it easier to insert and extract cablessmoke opacity and toxicity tests, the material falls within class F2 (in compliance with NF F16-101 Standard) in conformity with the UNI EN ISO 11925-2 Standard (test with use of a single flame)
- no covers so that cables can be constantly monitored
- possibility of fastening using screws and rivets or bi-adhesivetape which sticks strongly to the steel (pre-mounted)
- standard 500-mm length
- industrial application

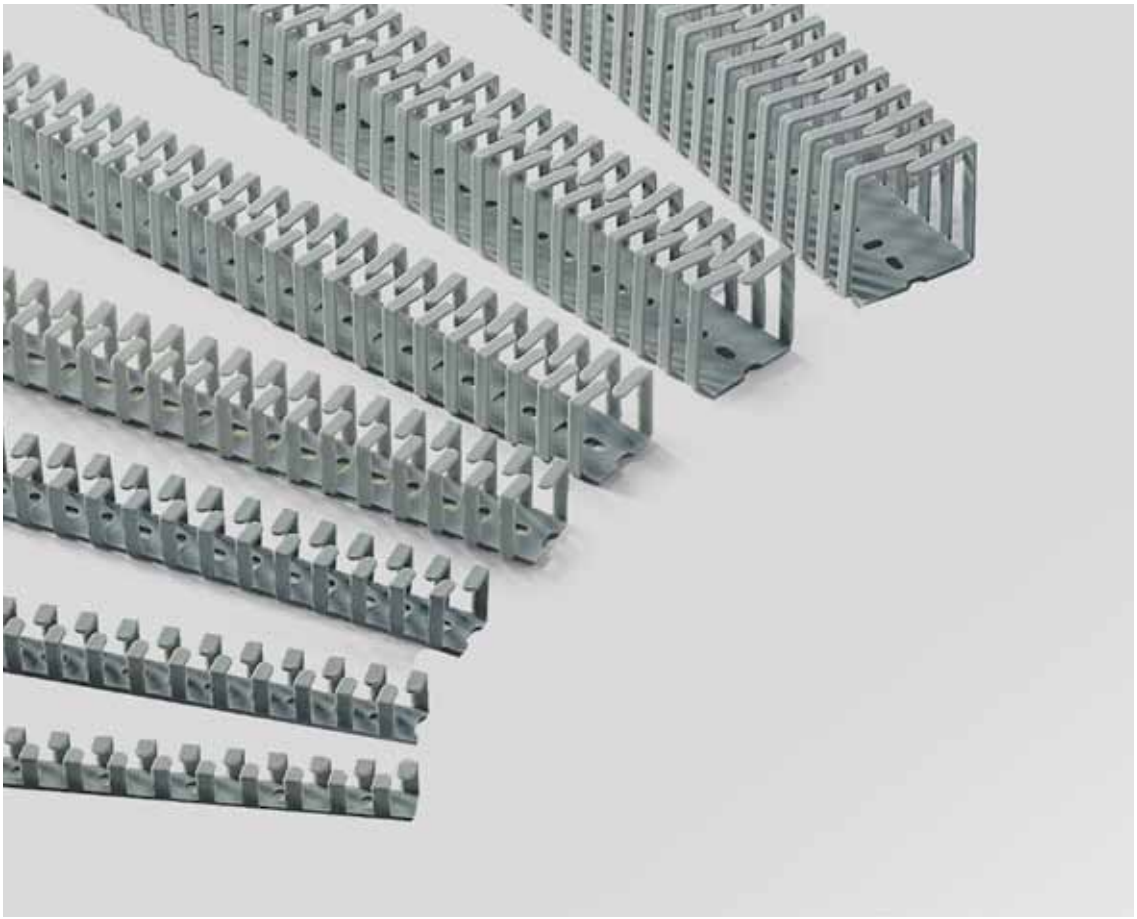

# Wiring ducts
## Ordering codes

05 0..

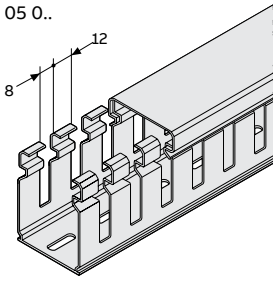


05 1..

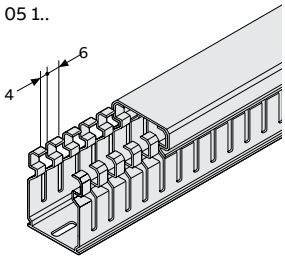


### Halogen free wiring ducts with vertical slots

**Halogen free wiring ducts with vertical slot grey RAL 7035**

| Dimensions (mm) | | Slot 8x12mm | Slot 4x6mm | Unit/pack |
|---|---|---|---|---|
| B | H | Code | Code | meters |
| 15 | 17 | 1SL9019A00 | 1SL9119A00 | 46 |
| 25 | 30 | 1SL9033A00 | 1SL9133A00 | 58 |
| 40 | 30 | 1SL9035A00 | 1SL9135A00 | 38 |
| 60 | 30 | 1SL9037A00 | 1SL9137A00 | 52 |
| 25 | 40 | 1SL9043A00 | 1SL9143A00 | 48 |
| 40 | 40 | 1SL9045A00 | 1SL9145A00 | 30 |
| 60 | 40 | 1SL9047A00 | 1SL9147A00 | 40 |
| 80 | 40 | 1SL9049A00 | 1SL9149A00 | 32 |
| 100 | 40 | 1SL9051A00 | 1SL9151A00 | 24 |
| 120 | 40 | 1SL9053A00 | 1SL9153A00 | 20 |
| 25 | 60 | 1SL9063A00 | 1SL9163A00 | 34 |
| 40 | 60 | 1SL9065A00 | 1SL9165A00 | 22 |
| 60 | 60 | 1SL9067A00 | 1SL9167A00 | 32 |
| 80 | 60 | 1SL9069A00 | 1SL9169A00 | 24 |
| 100 | 60 | 1SL9071A00 | 1SL9171A00 | 20 |
| 120 | 60 | 1SL9073A00 | 1SL9173A00 | 14 |
| 25 | 80 | 1SL9083A00 | 1SL9183A00 | 28 |
| 40 | 80 | 1SL9085A00 | 1SL9185A00 | 36 |
| 60 | 80 | 1SL9087A00 | 1SL9187A00 | 24 |
| 80 | 80 | 1SL9089A00 | 1SL9189A00 | 16 |
| 100 | 80 | 1SL9091A00 | 1SL9191A00 | 16 |
| 120 | 80 | 1SL9093A00 | 1SL9193A00 | 12 |

**Spare covers**

| Description | Code | Unit/pack meters |
|---|---|---|
| Trunking base 15mm | 1SL5316A00 | 2/200 |
| Trunking base 25mm | 1SL5317A00 | 2/60 |
| Trunking base 40mm | 1SL5318A00 | 2/40 |
| Trunking base 60mm | 1SL5319A00 | 2/24 |
| Trunking base 80mm | 1SL5320A00 | 2/16 |
| Trunking base 100mm | 1SL5321A00 | 2/48 |
| Trunking base 120mm | 1SL5322A00 | 2/36 |

**For further information on the wiring ducts, please contact the Products for installation division of ABB SACE**

• In-depth technical information page 4–1 • Overall dimensions page 5–1

# Wiring ducts
## Ordering codes

05 0..

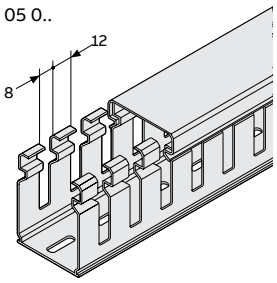


05 1..

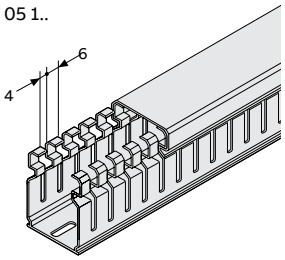


### Lead free thermoplastic wiring ducts with vertical slots

**Wiring ducts made of lead free thermoplastic material with grey RAL 7030 slots**

| Dimensions (mm) | | Slot 8x12mm | Slot 4x6mm | Unit/pack |
|---|---|---|---|---|
| B | H | Code | Code | meters |
| 15 | 17 | 05 019 | 05 119 | 92 |
| 25 | 30 | 05 033 | 05 133 | 116 |
| 40 | 30 | 05 035 | 05 135 | 80 |
| 60 | 30 | 05 037 | 05 137 | 52 |
| 25 | 40 | 05 043 | 05 143 | 96 |
| 40 | 40 | 05 045 | 05 145 | 60 |
| 60 | 40 | 05 047 | 05 147 | 40 |
| 80 | 40 | 05 049 | 05 149 | 32 |
| 100 | 40 | 05 051 | 05 151 | 24 |
| 120 | 40 | 05 053 | 05 153 | 20 |
| 25 | 60 | 05 063 | 05 163 | 68 |
| 40 | 60 | 05 065 | 05 165 | 44 |
| 60 | 60 | 05 067 | 05 167 | 32 |
| 80 | 60 | 05 069 | 05 169 | 24 |
| 100 | 60 | 05 071 | 05 171 | 18 |
| 120 | 60 | 05 073 | 05 173 | 14 |
| 25 | 80 | 05 083 | 05 183 | 56 |
| 40 | 80 | 05 085 | 05 185 | 36 |
| 60 | 80 | 05 087 | 05 187 | 24 |
| 80 | 80 | 05 089 | 05 189 | 16 |
| 100 | 80 | 05 091 | 05 191 | 16 |
| 120 | 80 | 05 093 | 05 193 | 12 |
| 25 | 100 | 05 094 | 05 194 | 40 |
| 40 | 100 | 05 095 | 05 195 | 28 |
| 60 | 100 | 05 096 | 05 196 | 20 |
| 80 | 100 | 05 097 | 05 197 | 14 |
| 100 | 100 | 05 098 | 05 198 | 8 |
| 150 | 100 | 05 099 | 05 199 | 8 |

### Spare covers

| Description | Code | Unit/pack meters |
|---|---|---|
| Trunking base 15mm | 05 300 | 2/200 |
| Trunking base 25mm | 05 302 | 2/60 |
| Trunking base 40mm | 05 304 | 2/40 |
| Trunking base 60mm | 05 306 | 2/24 |
| Trunking base 80mm | 05 308 | 2/16 |
| Trunking base 100mm | 05 310 | 2/48 |
| Trunking base 120mm | 05 312 | 2/36 |
| Trunking base 150mm | 05 314 | 2/28 |

**For further information on the wiring ducts, please contact the Products for installation division of ABB SACE**

• In-depth technical information page 4–1 • Overall dimensions page 5–1

# Wiring ducts
## Ordering codes

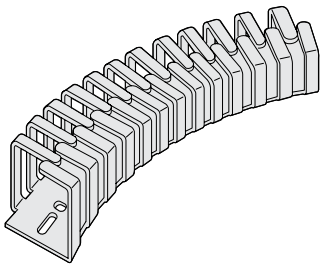

### Flexible thermoplastic wiring ducts

**Flexible wiring duct**

| Dimensions (mm) | | | Unit/pack |
|---|---|---|---|
| **B** | **H** | **Code** | **meters** |
| **Slot pitch 7.5/5 - Standard length 500 mm.** | | | |
| 12.5 | 12.5 | 05 400 | 112 |
| 16 | 16 | 05 402 | 84 |
| 20 | 20 | 05 405 | 112 |
| 25 | 25 | 05 410 | 70 |
| 30 | 30 | 05 415 | 50 |
| 40 | 40 | 05 420 | 50 |
| 50 | 50 | 05 425 | 32 |

**For further information on the wiring ducts, please contact the Products for installation division of ABB SACE**

• In-depth technical information page 4–1 • Overall dimensions page 5–1

# Wiring ducts
## Ordering codes

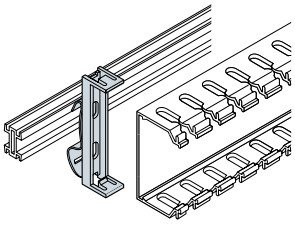

### Accessorieses

**Fix-O-quick**
**Quick clip for DIN rail**

| Description | Code | Unit/pack pieces |
|---|---|---|
| Trunking base 25 mm | 05 250 | 20/600 |
| Trunking base 40 mm | 05 252 | 20/600 |
| Trunking base 60 mm | 05 254 | 20/600 |
| Trunking base 80 mm | 05 256 | 20/240 |
| Trunking base 100 mm | 05 258 | 20/240 |
| Trunking base 120 mm | 05 260 | 20/240 |
| Trunking base 150 mm | 05 262 | 20/240 |

AD1098

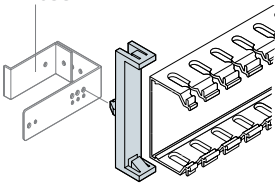

**Quick clip for base plate**

| Description | Code | Unit/pack pieces |
|---|---|---|
| Trunking base 25 mm | 05 270 | 20/600 |
| Trunking base 40 mm | 05 272 | 20/600 |
| Trunking base 60 mm | 05 274 | 20/600 |
| Trunking base 80 mm | 05 276 | 20/240 |
| Trunking base 100 mm | 05 278 | 20/240 |
| Trunking base 120 mm | 05 280 | 20/240 |
| Trunking base 150 mm | 05 282 | 20/240 |

Can be snapped onto holes as shown:

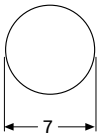


**For further information on the wiring ducts, please contact the Products for installation division of ABB SACE**

# Wiring ducts
## Ordering codes

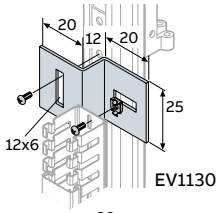

EV1130

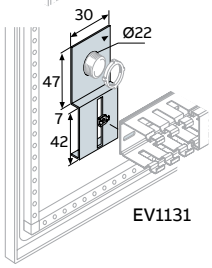

EV1131

## Accessorieses

### Wiring duct support brackets

| Description | Code | Unit/pack pieces |
|---|---|---|
| No.100 wiring duct support brackets on structure uprights | EV1130 | 1/100 |
| No.100 wiring duct support brackets on structure uprights | EV1131 | 1/100 |

### Wiring duct support brackets

| Description | Code | Unit/pack pieces |
|---|---|---|
| No.4 plastic supports for horizontal wiring duct | AD1009 | 1/4 |
| No.4 metal supports for horizontal/vertical wiring duct | AD1098 | 1/4 |

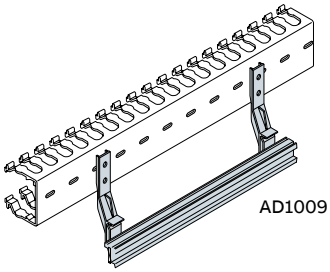
AD1009

### Duct shears

| Description | Code | Unit/pack pieces |
|---|---|---|
| Duct shears | 05 265 | 1/1 |

### Rivet fastener

| Description | Code | Unit/pack pieces |
|---|---|---|
| For ø 6 mm rivets (black colour) | 05 266 | 1/12 |
| For ø 4 mm rivets (green colour) | 05 268 | 1/12 |

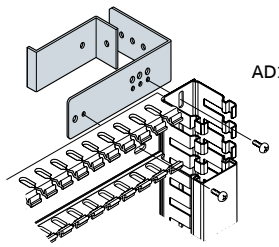
AD1098

### Plastic rivet

| Description | Code | Unit/pack pieces |
|---|---|---|
| 05 214 Ø 4mm | 05 214 | 1/100 |
| 05 216 Ø 6mm | 05 216 | 1/100 |

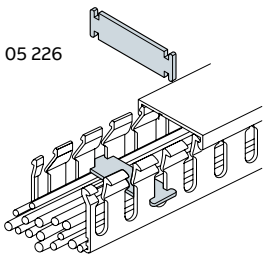
05 226

### Plastic cable retainer

| Description | Code | Unit/pack pieces |
|---|---|---|
| Trunking base 40 mm | 05 224 | 1/100 |
| Base duct 60mm | 05 226 | 1/100 |
| Base duct 80mm | 05 228 | 1/100 |
| Base duct 100/120mm | 05 230 | 1/100 |

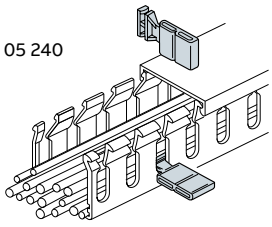
05 240

### Plastic label tag

| Description | Code | Unit/pack pieces |
|---|---|---|
| Suitable for wiring ducts with 8/12 mm slots only | 05 240 | 1/100 |

**For further information on the wiring ducts, please contact the Products for installation division of ABB SACE**

## Chapter 4
In-depth technical information


**4**–2 **Mechanical and characteristics**

**4**–4 **Declaration of conformity**

**4**–5 **Dissipating power**

**4**–10 **Conformity with Standards**

**4**–11 **Mechanical shock resistance IK**

**4**–12 **IP Protection classes**

**4**–14 **Special paining**

**4**–15 **NEMA classification**

**4**–16 **ATEX Certification**

**4**–17 **Electrical continuity**

**4**–19 **Handling**

**4**–21 **Maximum capacities**

**4**–25 **Busbars with shaped section and flat busbars**

**4**–30 **Ventilation and air conditioning**

# In-depth technical information
## Mechanical characteristics

### Material

| | Stucture | Kit panels | Structure panels | Doors | | Plates |
|---|---|---|---|---|---|---|
| | Galvanized Steel sheet [mm] | Pickled steel sheet [mm] | Pickled steel sheet [mm] | Pickled steel sheet [mm] | Safety glass external thickness [mm] | Galvanized Steel sheet [mm] |
| **SR2 Enclosures** | 12/10 | 12/10 | - | 12/10 | 4 | 20/10 |
| **IS2 - IS2 EMC Cabinets** | 15/10 | 12/10 | 15/10 | 15/10 | 4 | 25/10 |

### Painting

| | | |
|---|---|---|
| **Structure colour** | Grey orange peel RAL 7035 | |
| **Plinth colour** | Grey orange peel RAL 7012 | |
| **Standard cycle** | Sheet washing | |
| | Phosphating with ferrous salt base | |
| | Tunnel drying at 100°C | |
| | External and internal painting with electrostatic application of powder thermosetting coat with epoxy polyester binders, orange peel RAL 7035 colour, 60/70 micron total thickness. | |
| | Oven polymerisation at 180° C. | |
| **Characteristics of the paint** | Binder: | epoxy polyester |
| | Specific gravity: | 1,61g/cm3 |
| | Theoretical spread: | 10.4 m2/kg with 60 micron average film thickness |
| | Melting point: | 85-95° C (Kofler bench method) |
| | Granulometry: | standard distribution from 5 to 100 micron with average particle size between 30 and 40 micron. Hardening 12 min x 190° C (object temperature). |
| | Hardness: | 1H - 2H |
| | Bending elasticity DIN 53152: | unaltered on 1/4” spindle |
| | Reticle adhesion DIN 53151: | GT O (100%) |
| | Erichem elasticity: | SEN DIN 53156: > 6mm |
| | Gardner impact strength: | 25 Kg. x cm. |

Tests carried out on degreased and phosphated plates with 60/70 micron film thickness.
The painting has passed the saline mist resistance tests (193 hours).

### Environmental characteristics according to the IEC 62208 Standard

| | | |
|---|---|---|
| **Type of installation** | indoor | |
| **Installation conditions** | floor | |
| **Operating climate (t°/rh %)** | constant | 23°C/83% - 40°C/93% |
| | variable | 23°C/98% - 40°C/98% |
| **Environmental temperature limits** | operating | -5°C +40°C |
| | storage | -25°C +55°C |

# In-depth technical information

## Mechanical characteristics

### IS2 cabinet vibration tests

The results of the vibration tests which our standard IS2 automation enclosures have undergone are significant, above all when the enclosures are installed on ships, in seismic areas and in military areas. The vibration tests on the standard IS2 enclosure s have produced the following positive result: with respect to a stress 0.1 g in a range of frequencies between 10 and 500Hz, the maximum acceleration found inside the enclosure is less than 0.5 g.

| | |
|---|---|
| Range of frequency 10-500Hz | 10-500Hz |
| Stress 0,1 g | 0,1 g |
| Maximum acceleration reached (inside the enclosure) <0,5 g | <0,5 g |

We have also verified that the IS2 standard enclosure has linear behaviour even when the level of acceleration is increased up to 1 g in the same range of frequencies.



### Antiseismic tests enclosures IS2

Enclosure IS2 dimensions 2000x800x800mm (HXDXW) with 435 kh of load. Enclosures have been tested according with the Standard IEC 60068-2-57 “Environmental testing Part. 2: Tests method. Vibration - Time history method” and with the Standard IEEE Std 693 “Recommended Practice for Seismic Design of Substation”.

**Similar application fields***

| According to the Standard IEC 60068-2-57 - IEEE Std 693 | Seismic Zone IEC 68-3-3 | Richter scale | Mercalli scale |
|---|---|---|---|
| **Enclosure without specific accessories** | | | |
| Shock level test up to 0.5 g | Zona 4 | 7 | 9 |
| **Enclosure with specific accessories AS0001+crosspieces+reinforced plinth** | | | |
| Shock level test up to 0.75 g | Zona 4 | 7,5 | 10 |

* Values of different scales are indicative.

# In-depth technical information
## Declaration of conformity

Conformity with the IEC 62208, IEC 60439-1 and new EN61439-1 and 2 standards. The enclosures have undergone the type tests foreseen by the IEC 62208 and IEC 60439-1 and new 61439-1 and 2 standards at the ABB laboratories. The results of these tests guarantee the performances of the IS2 enclosures and allow the end enclosure builder not to carry out any further type tests by respecting the selection criteria and assembly instructions of the various components. These results, given below, can be referred to for making out the declaration of conformity for the electric enclosure.

**CEI IEC 62208 Standard**
"Empty enclosures for low voltage switchgear and controlgear assemblies".
EN 60439-1 and new 61439-1 and 2 standards
"Low voltage protection switchgear and controlgear assemblies".



### IS2 Cabinets

| **Nominal characteristics:** | |
|---|---|
| **Rated service voltage Un** | up to 1000V AC - 1500V DC |
| **Rated insulation voltage Ui** | up to 1000V AC - 1500V DC |
| **Rated impulse withstand voltage Uimp** | 8 kV |
| **Rated frequency fn** | 50-60Hz |
| **Degree of protection** | IP65 with door and fixed flanged |
| | IP54 with ventilated/air-conditioned door and panels - with EMC door version |
| **Mechanical impact strength IK** | 10 with blind door |
| | 09 with glazed door - 08 EMC version glazed door |
| **Rated short-time current Icw** | 65 kA |
| **Rated max.peak current Ipk** | 143 kA |
| **Installation condition** | Internal cabinet |

| **Efficiency of the protection circuit (Ref. par. 8.2.4. of the Standard)** |
|---|
| By respecting the assembly indications for the metal components, the effective electrical continuity between the conductive electrical parts has been verified, with negligible resistance values. |

| **Insulation distances (Ref. par. 8.2.5. of the Standard)** |
|---|
| The insulation distances are guaranteed by following the ABB SACE metalwork structure and circuit-breaker assembly and mounting instruction. |

| **The insulation distances are guaranteed by following the ABB SACE metalwork structure and circuit-breaker assembly and mounting instruction.** |
|---|
| By respecting the assembly instructions for the structures and ABB SACE circuit-breakers, mechanical operation is verified. |

When correctly selected and assembled, as per the indications given in the catalogue and in the instruction manual, they allow of electrical enclosures complying with the IEC 60439-1 Standard and the new IEC 61439-1 and 2 Standard "Low voltage controlgear and switchgear for assemblies" and the IEC 60204-1" Standard "Safety of machinery – Electrical equipment of machines", to be built, based on what is foreseen under the Low Voltage Directive of the European Community 2006/95/CE (which takes place of 73/23/CEE directive).
The above is valid if the electrical enclosure is designed and constructed:

- selecting the materials based on the performances indicated in the ABB catalogues;
- sizing the conductors according to the prescriptions of the IEC 60439-1 Standard and the new IEC 61439-1 and 2 Standard, and Standard and CEI 64-8;
- carrying out the individual tests foreseen under the IEC 60439-1 Standard and the new Standard IEC 61439-1 and 2 Standard with a positive outcome.

# In-depth technical information
## Dissipating power

**Temperature-rise (Ref. Standard IEC 60439-1 par. 8.2.1 and new IEC 61439-1-2 Standard).**
The following tables show the thermal dissipation values referred to all the dimensions of the enclosures and to the type of installation, coming from the type tests carried out. The dissipating power data (in Watts) depend on the admissible overtemperature inside the enclosure in the upper Part, and must be compared with the sum of the powers dissipated by all the components installed inside the
enclosure.

**Use of the dissipated power tables**
The dissipated power value of a cabinet depends on the maximum temperature (T max) and on the admissible overtemperatures (EN60439-1 Standard and new IEC 61439-1-2 Standard).

**Example**
If an ambient temperature of 35 °C is considered, the value of dissipating admissible overtemperature (ΔT), which is 30 °C if a temperature at the top of the enclosure of 65 °C is acceptable.

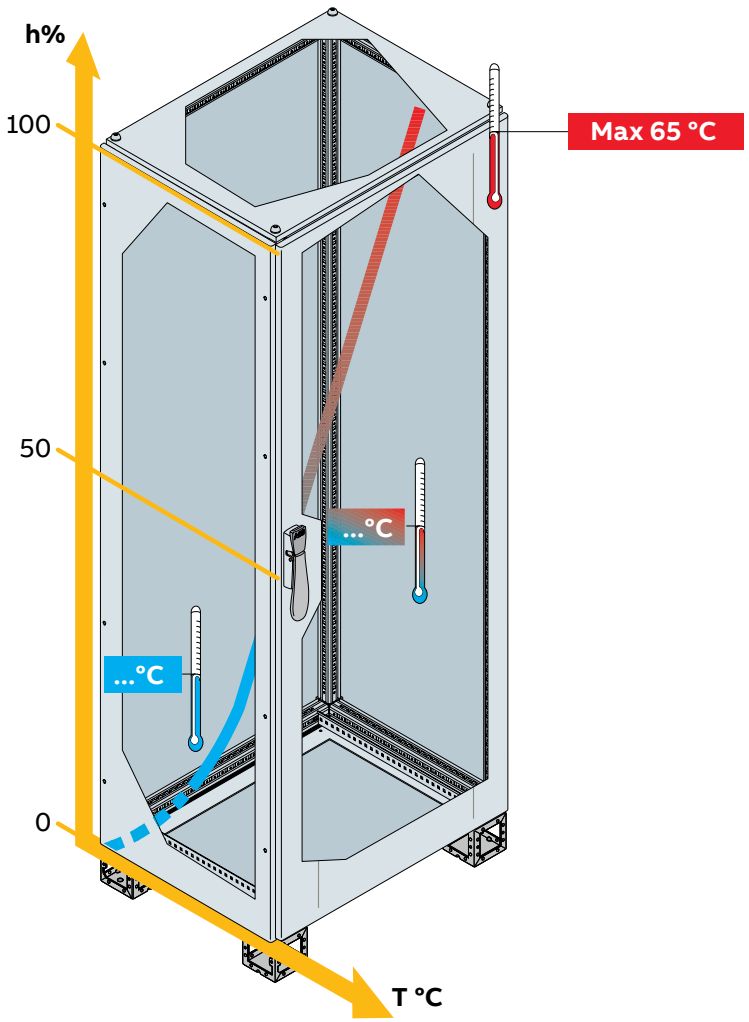

# In-depth technical information

## Dissipating power

### IS2 enclosures - H = 1400/1600mm

**Maximum dissipating power (W)**

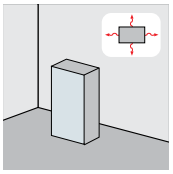

Single enclosure exposed on all sides

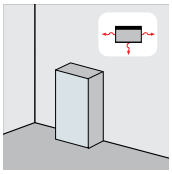

Wall-mounted single enclosure

| | Dimensions (mm) | | | Overtemperature values ΔT | | | | | | | |
|---|---|---|---|---|---|---|---|---|---|---|---|
| **Code** | **H** | **W** | **D** | **25°C** | **30°C** | **35°C** | **40°C** | **25°C** | **30°C** | **35°C** | **40°C** |
| 1STQ005346B0000 | 1400 | 600 | 300 | 148 | 186 | 225 | 266 | 136 | 170 | 206 | 244 |
| 1STQ005350B0000 | 1400 | 600 | 400 | 178 | 224 | 271 | 320 | 175 | 220 | 266 | 314 |
| 1STQ005357B0000 | 1400 | 600 | 500 | 234 | 294 | 357 | 421 | 211 | 265 | 321 | 379 |
| 1STQ005347B0000 | 1400 | 800 | 300 | 195 | 245 | 297 | 350 | 186 | 233 | 282 | 333 |
| 1STQ005351B0000 | 1400 | 800 | 400 | 249 | 313 | 379 | 447 | 230 | 289 | 350 | 414 |
| 1STQ005358B0000 | 1400 | 800 | 500 | 300 | 376 | 456 | 538 | 271 | 340 | 412 | 487 |
| 1STQ005348B0000 | 1400 | 1000 | 300 | 257 | 323 | 391 | 461 | 236 | 297 | 359 | 424 |
| 1STQ005352B0000 | 1400 | 1000 | 400 | 303 | 380 | 460 | 543 | 284 | 357 | 432 | 511 |
| 1STQ005353B0000 | 1400 | 1200 | 400 | 354 | 444 | 538 | 635 | 332 | 417 | 505 | 596 |
| 1STQ005359B0000 | 1400 | 1000 | 500 | 346 | 434 | 526 | 621 | 325 | 408 | 494 | 584 |
| 1STQ005360B0000 | 1400 | 1200 | 500 | 390 | 489 | 592 | 699 | 362 | 454 | 551 | 650 |
| 1STQ005369B0000 | 1600 | 600 | 300 | 176 | 221 | 268 | 316 | 151 | 190 | 230 | 272 |
| 1STQ005371B0000 | 1600 | 600 | 400 | 220 | 277 | 335 | 396 | 194 | 244 | 295 | 349 |
| 1STQ005378B0000 | 1600 | 600 | 500 | 259 | 325 | 394 | 465 | 234 | 293 | 355 | 420 |
| 1STQ005370B0000 | 1600 | 800 | 300 | 244 | 307 | 371 | 439 | 209 | 263 | 318 | 376 |
| 1STQ005372B0000 | 1600 | 800 | 400 | 284 | 357 | 432 | 510 | 253 | 317 | 384 | 453 |
| 1STQ005379B0000 | 1600 | 800 | 500 | 317 | 398 | 483 | 570 | 295 | 371 | 449 | 530 |
| 1STQ005373B0000 | 1600 | 1000 | 400 | 331 | 415 | 503 | 594 | 308 | 387 | 469 | 554 |
| 1STQ005374B0000 | 1600 | 1200 | 400 | 379 | 476 | 577 | 681 | 347 | 435 | 527 | 622 |
| 1STQ005379B0000 | 1600 | 800 | 500 | 317 | 398 | 483 | 570 | 295 | 371 | 449 | 530 |
| 1STQ005380B0000 | 1600 | 1000 | 500 | 366 | 460 | 557 | 657 | 342 | 429 | 520 | 614 |
| 1STQ005381B0000 | 1600 | 1200 | 500 | 416 | 522 | 632 | 746 | 383 | 481 | 582 | 688 |

Values also valid for the versions with glazed door.

# In-depth technical information

## Dissipating power

### IS2 enclosures - H = 1800mm

**Maximum dissipating power (W)**

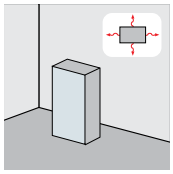

Single enclosure exposed on all sides

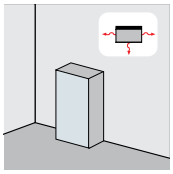

Wall-mounted single enclosure

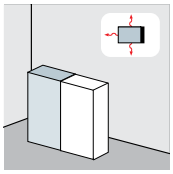

First or last enclosure exposed

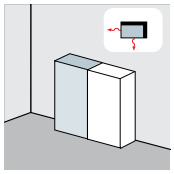

Wall-mounted first or last enclosure

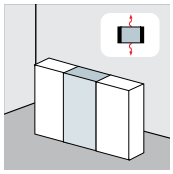

Central enclosure exposed

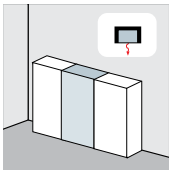

Wall-mounted central enclosure

| | Dimensions (mm) | | Overtemperature values ΔT | | | | | | | | | | | | | | | | | | | | | | | |
|---|---|---|---|---|---|---|---|---|---|---|---|---|---|---|---|---|---|---|---|---|---|---|---|---|---|---|
| **Code** | **W** | **D** | **25°C** | **30°C** | **35°C** | **40°C** | **25°C** | **30°C** | **35°C** | **40°C** | **25°C** | **30°C** | **35°C** | **40°C** | **25°C** | **30°C** | **35°C** | **40°C** | **25°C** | **30°C** | **35°C** | **40°C** | **25°C** | **30°C** | **35°C** | **40°C** |
| ES1844K | 400 | 400 | 161 | 202 | 245 | 289 | 147 | 185 | 224 | 264 | 145 | 145 | 220 | 260 | 132 | 166 | 201 | 237 | 130 | 163 | 197 | 233 | 119 | 149 | 180 | 213 |
| ES1845K | 400 | 500 | 190 | 238 | 289 | 341 | 177 | 222 | 268 | 317 | 170 | 170 | 259 | 305 | 157 | 197 | 239 | 282 | 149 | 187 | 227 | 268 | 139 | 174 | 211 | 250 |
| ES1846K | 400 | 600 | 219 | 275 | 333 | 393 | 207 | 259 | 314 | 371 | 195 | 195 | 296 | 349 | 182 | 229 | 277 | 327 | 169 | 212 | 257 | 303 | 159 | 200 | 242 | 286 |
| ES1848K | 400 | 800 | 283 | 355 | 430 | 508 | 270 | 339 | 411 | 485 | 248 | 248 | 377 | 445 | 236 | 296 | 358 | 423 | 211 | 264 | 320 | 378 | 203 | 254 | 308 | 364 |
| ES1840K | 400 | 1000 | 346 | 435 | 526 | 621 | 336 | 421 | 510 | 602 | 301 | 301 | 457 | 540 | 289 | 363 | 439 | 519 | 252 | 317 | 384 | 453 | 247 | 310 | 375 | 443 |
| ES1864K | 600 | 400 | 219 | 275 | 333 | 393 | 197 | 247 | 300 | 354 | 204 | 204 | 310 | 366 | 182 | 229 | 277 | 327 | 188 | 235 | 285 | 337 | 169 | 212 | 257 | 304 |
| ES1865K | 600 | 500 | 256 | 321 | 389 | 460 | 233 | 293 | 355 | 419 | 236 | 236 | 359 | 423 | 214 | 268 | 325 | 383 | 214 | 268 | 325 | 383 | 196 | 246 | 298 | 351 |
| ES1866K | 600 | 600 | 292 | 367 | 444 | 524 | 269 | 337 | 409 | 483 | 267 | 267 | 406 | 479 | 244 | 306 | 371 | 438 | 239 | 299 | 362 | 428 | 221 | 278 | 337 | 397 |
| ES1868K | 600 | 800 | 367 | 461 | 558 | 659 | 346 | 434 | 526 | 621 | 328 | 328 | 499 | 589 | 309 | 387 | 469 | 554 | 292 | 366 | 443 | 523 | 277 | 347 | 420 | 496 |
| ES1860K | 600 | 1000 | 425 | 533 | 646 | 762 | 421 | 529 | 640 | 756 | 392 | 392 | 596 | 704 | 375 | 470 | 569 | 672 | 344 | 432 | 523 | 618 | 331 | 416 | 503 | 594 |
| ES1884K | 800 | 400 | 283 | 355 | 430 | 508 | 250 | 314 | 380 | 449 | 268 | 268 | 407 | 481 | 236 | 296 | 358 | 423 | 250 | 314 | 380 | 449 | 224 | 281 | 340 | 402 |
| ES1885K | 800 | 500 | 323 | 406 | 492 | 580 | 291 | 365 | 443 | 523 | 303 | 303 | 461 | 544 | 271 | 339 | 411 | 485 | 281 | 352 | 427 | 504 | 255 | 320 | 388 | 458 |
| ES1886K | 800 | 600 | 367 | 461 | 558 | 659 | 335 | 420 | 509 | 601 | 339 | 339 | 515 | 608 | 309 | 387 | 469 | 554 | 313 | 393 | 476 | 562 | 288 | 361 | 438 | 517 |
| ES1888K | 800 | 800 | 431 | 541 | 655 | 774 | 422 | 529 | 641 | 757 | 413 | 413 | 628 | 741 | 383 | 480 | 582 | 687 | 375 | 470 | 569 | 672 | 351 | 441 | 534 | 630 |
| ES1880K | 800 | 1000 | 482 | 605 | 733 | 865 | 471 | 590 | 715 | 844 | 454 | 454 | 691 | 815 | 450 | 565 | 684 | 808 | 435 | 546 | 661 | 780 | 413 | 518 | 627 | 741 |
| ES1804K | 1000 | 400 | 346 | 435 | 526 | 621 | 304 | 382 | 463 | 546 | 332 | 332 | 504 | 595 | 289 | 363 | 439 | 519 | 315 | 395 | 478 | 565 | 280 | 351 | 426 | 502 |
| ES1805K | 1000 | 500 | 395 | 496 | 601 | 709 | 353 | 443 | 537 | 634 | 373 | 373 | 567 | 669 | 333 | 417 | 506 | 597 | 353 | 443 | 537 | 634 | 319 | 400 | 484 | 572 |
| ES1806K | 1000 | 600 | 425 | 533 | 646 | 762 | 401 | 503 | 609 | 719 | 412 | 412 | 627 | 740 | 375 | 470 | 569 | 672 | 389 | 488 | 592 | 699 | 355 | 446 | 540 | 637 |
| ES1808K | 1000 | 800 | 482 | 605 | 733 | 865 | 464 | 583 | 706 | 833 | 461 | 461 | 700 | 826 | 450 | 565 | 684 | 808 | 446 | 560 | 678 | 801 | 425 | 534 | 646 | 763 |
| ES1800K | 1000 | 1000 | 543 | 681 | 825 | 974 | 520 | 653 | 791 | 934 | 509 | 509 | 774 | 913 | 496 | 622 | 754 | 890 | 485 | 609 | 737 | 870 | 485 | 608 | 737 | 870 |
| ES1824K | 1200 | 400 | 403 | 506 | 613 | 723 | 362 | 454 | 550 | 650 | 396 | 396 | 603 | 711 | 347 | 436 | 528 | 623 | 384 | 482 | 583 | 689 | 340 | 426 | 517 | 610 |
| ES1827K | 1200 | 500 | 438 | 549 | 665 | 786 | 415 | 520 | 630 | 744 | 427 | 427 | 650 | 767 | 395 | 495 | 600 | 708 | 423 | 530 | 642 | 758 | 382 | 480 | 581 | 686 |
| ES1826K | 1200 | 600 | 471 | 591 | 715 | 845 | 448 | 562 | 680 | 803 | 456 | 456 | 693 | 818 | 440 | 552 | 669 | 789 | 448 | 562 | 680 | 803 | 422 | 530 | 642 | 758 |
| ES1828K | 1200 | 800 | 538 | 674 | 817 | 964 | 508 | 637 | 772 | 911 | 511 | 511 | 777 | 918 | 491 | 616 | 747 | 882 | 494 | 620 | 751 | 886 | 487 | 611 | 740 | 873 |
| ES1875K | 1600 | 500 | 533 | 669 | 810 | 956 | 466 | 585 | 708 | 836 | 517 | 517 | 785 | 927 | 449 | 563 | 682 | 805 | 497 | 624 | 755 | 892 | 442 | 554 | 671 | 793 |
| ES1876K | 1600 | 600 | 592 | 743 | 900 | 1063 | 524 | 658 | 797 | 941 | 566 | 566 | 861 | 1016 | 502 | 630 | 763 | 901 | 546 | 685 | 829 | 979 | 491 | 615 | 745 | 880 |
| ES1878K | 1600 | 800 | 705 | 884 | 1071 | 1264 | 636 | 798 | 966 | 1141 | 667 | 667 | 1013 | 1197 | 603 | 757 | 917 | 1082 | 636 | 798 | 966 | 1141 | 582 | 730 | 885 | 1044 |

Values also valid for the versions with glazed door.

# In-depth technical information

## Dissipating power

### IS2 - IS2 EMC enclosures - H = 2000mm

**Maximum dissipating power (W)**

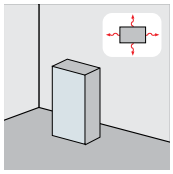

Single enclosure exposed on all sides

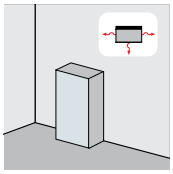

Wall-mounted single enclosure

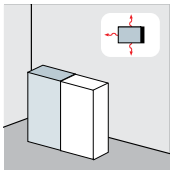

First or last enclosure exposed

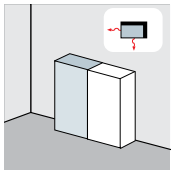

Wall-mounted first or last enclosure

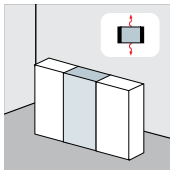

Central enclosure exposed

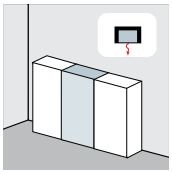

Wall-mounted central enclosure

| | Dimensions (mm) | | Overtemperature values ΔT | | | | | | | | | | | | | | | | | | | | | | | |
|---|---|---|---|---|---|---|---|---|---|---|---|---|---|---|---|---|---|---|---|---|---|---|---|---|---|---|
| Code | W | D | 25°C | 30°C | 35°C | 40°C | 25°C | 30°C | 35°C | 40°C | 25°C | 30°C | 35°C | 40°C | 25°C | 30°C | 35°C | 40°C | 25°C | 30°C | 35°C | 40°C | 25°C | 30°C | 35°C | 40°C |
| ES2044K | 400 | 400 | 174 | 218 | 264 | 312 | 158 | 199 | 240 | 284 | 155 | 195 | 236 | 279 | 141 | 177 | 215 | 254 | 139 | 175 | 212 | 250 | 127 | 159 | 193 | 228 |
| ES2045K | 400 | 500 | 206 | 258 | 313 | 369 | 191 | 239 | 290 | 342 | 183 | 230 | 278 | 329 | 169 | 212 | 257 | 304 | 161 | 202 | 245 | 289 | 149 | 187 | 227 | 268 |
| ES2046K | 400 | 600 | 237 | 297 | 360 | 425 | 223 | 280 | 339 | 400 | 210 | 264 | 320 | 377 | 197 | 247 | 299 | 353 | 182 | 228 | 277 | 326 | 171 | 215 | 260 | 307 |
| ES2048K | 400 | 800 | 305 | 382 | 463 | 547 | 291 | 365 | 442 | 522 | 266 | 334 | 405 | 478 | 253 | 317 | 385 | 454 | 226 | 283 | 343 | 405 | 217 | 272 | 330 | 389 |
| ES2040K | 400 | 1000 | 372 | 467 | 566 | 668 | 361 | 453 | 549 | 648 | 324 | 407 | 493 | 582 | 311 | 391 | 473 | 559 | 270 | 339 | 411 | 485 | 264 | 331 | 401 | 473 |
| ES2064K | 600 | 400 | 237 | 297 | 360 | 425 | 213 | 267 | 323 | 382 | 221 | 277 | 335 | 396 | 197 | 247 | 299 | 353 | 202 | 254 | 308 | 363 | 182 | 228 | 277 | 327 |
| ES2065K | 600 | 500 | 275 | 346 | 419 | 494 | 251 | 315 | 381 | 450 | 253 | 318 | 385 | 454 | 229 | 287 | 348 | 411 | 229 | 288 | 348 | 411 | 209 | 263 | 318 | 376 |
| ES2066K[1] | 600 | 600 | 315 | 395 | 479 | 565 | 290 | 364 | 440 | 520 | 287 | 360 | 436 | 515 | 262 | 329 | 399 | 471 | 257 | 322 | 390 | 460 | 237 | 298 | 361 | 426 |
| ES2068K[2] | 600 | 800 | 387 | 486 | 588 | 694 | 370 | 464 | 562 | 663 | 351 | 440 | 533 | 629 | 329 | 413 | 500 | 591 | 311 | 390 | 473 | 558 | 294 | 369 | 447 | 528 |
| ES2060K | 600 | 1000 | 438 | 550 | 666 | 786 | 432 | 542 | 656 | 775 | 411 | 515 | 624 | 737 | 401 | 503 | 609 | 719 | 368 | 462 | 559 | 660 | 353 | 443 | 537 | 634 |
| ES2084K | 800 | 400 | 305 | 382 | 463 | 547 | 269 | 338 | 409 | 483 | 288 | 361 | 437 | 517 | 253 | 317 | 385 | 454 | 269 | 338 | 409 | 483 | 240 | 301 | 365 | 430 |
| ES2085K | 800 | 500 | 349 | 438 | 531 | 627 | 313 | 392 | 475 | 561 | 327 | 410 | 497 | 587 | 291 | 365 | 442 | 522 | 301 | 378 | 458 | 541 | 273 | 342 | 414 | 489 |
| ES2086K[3] | 800 | 600 | 387 | 486 | 588 | 694 | 358 | 449 | 544 | 642 | 362 | 455 | 551 | 650 | 329 | 413 | 500 | 591 | 334 | 420 | 508 | 600 | 307 | 385 | 466 | 550 |
| ES2089K[4] | 800 | 800 | 445 | 559 | 677 | 799 | 432 | 542 | 657 | 776 | 423 | 531 | 643 | 760 | 410 | 514 | 623 | 735 | 401 | 503 | 610 | 720 | 375 | 471 | 570 | 673 |
| ES2080K | 800 | 1000 | 506 | 635 | 769 | 908 | 489 | 613 | 743 | 877 | 471 | 591 | 716 | 845 | 463 | 581 | 703 | 830 | 446 | 560 | 678 | 801 | 442 | 554 | 671 | 792 |
| ES2004K | 1000 | 400 | 372 | 467 | 566 | 668 | 327 | 410 | 497 | 587 | 358 | 449 | 544 | 642 | 311 | 391 | 473 | 559 | 338 | 424 | 514 | 607 | 300 | 376 | 455 | 537 |
| ES2007K | 1000 | 500 | 404 | 507 | 614 | 725 | 378 | 474 | 574 | 678 | 393 | 494 | 598 | 706 | 355 | 446 | 540 | 637 | 378 | 474 | 574 | 678 | 340 | 426 | 516 | 610 |
| ES2006K | 1000 | 600 | 438 | 550 | 666 | 786 | 419 | 526 | 637 | 752 | 423 | 531 | 643 | 759 | 401 | 503 | 609 | 719 | 413 | 519 | 628 | 742 | 380 | 476 | 577 | 681 |
| ES2008K | 1000 | 800 | 506 | 635 | 769 | 908 | 481 | 604 | 732 | 864 | 479 | 601 | 727 | 859 | 463 | 581 | 703 | 830 | 460 | 577 | 699 | 825 | 456 | 572 | 693 | 819 |
| ES2000K | 1000 | 1000 | 579 | 726 | 880 | 1039 | 548 | 687 | 832 | 982 | 536 | 672 | 814 | 961 | 516 | 647 | 784 | 926 | 505 | 633 | 767 | 905 | 499 | 626 | 758 | 895 |
| ES2024K | 1200 | 400 | 414 | 519 | 628 | 742 | 387 | 486 | 589 | 695 | 405 | 508 | 616 | 727 | 371 | 466 | 564 | 666 | 401 | 504 | 610 | 720 | 363 | 455 | 551 | 651 |
| ES2025K | 1200 | 500 | 454 | 569 | 690 | 814 | 427 | 536 | 649 | 766 | 441 | 553 | 670 | 791 | 420 | 527 | 639 | 754 | 433 | 544 | 659 | 778 | 409 | 513 | 622 | 734 |
| ES2026K | 1200 | 600 | 493 | 618 | 749 | 884 | 462 | 580 | 702 | 829 | 474 | 595 | 720 | 850 | 451 | 566 | 686 | 809 | 462 | 580 | 702 | 829 | 451 | 566 | 686 | 810 |
| ES2028K | 1200 | 800 | 573 | 719 | 871 | 1028 | 533 | 668 | 810 | 956 | 539 | 677 | 820 | 968 | 511 | 641 | 776 | 916 | 516 | 647 | 784 | 925 | 502 | 629 | 762 | 900 |
| ES2075K | 1600 | 500 | 574 | 720 | 872 | 1030 | 499 | 625 | 758 | 895 | 556 | 697 | 845 | 997 | 481 | 604 | 732 | 864 | 532 | 668 | 809 | 955 | 471 | 591 | 715 | 845 |
| ES2076K | 1600 | 600 | 632 | 793 | 961 | 1135 | 558 | 700 | 848 | 1001 | 604 | 758 | 918 | 1084 | 533 | 669 | 811 | 957 | 581 | 729 | 883 | 1043 | 520 | 653 | 791 | 934 |
| ES2078K | 1600 | 800 | 755 | 947 | 1147 | 1354 | 679 | 851 | 1031 | 1218 | 713 | 895 | 1084 | 1279 | 643 | 806 | 976 | 1153 | 679 | 851 | 1031 | 1218 | 619 | 776 | 941 | 1110 |

[1] Values also valid for ES2066EMCK.
[2] Values also valid for ES2086EMCK.
[3] Values also valid for ES2068EMCK.
[4] Values also valid for ES2089EMCK.

Values also valid for the versions with glazed door.

# In-depth technical information

## Dissipating power

### IS2 - IS2 enclosures - H = 2200mm

**Maximum dissipating power (W)**

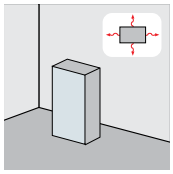

Single enclosure exposed on all sides

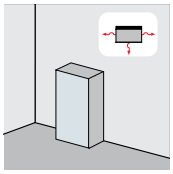

Wall-mounted single enclosure

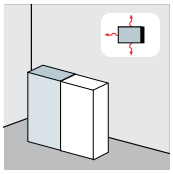

First or last enclosure exposed

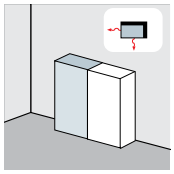

Wall-mounted first or last enclosure

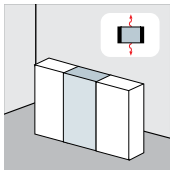

Central enclosure exposed

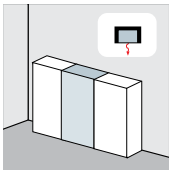

Wall-mounted central enclosure

| | Dimensions (mm) | | Overtemperature values ΔT | | | | | | | | | | | | | | | | | | | | | | | |
|---|---|---|---|---|---|---|---|---|---|---|---|---|---|---|---|---|---|---|---|---|---|---|---|---|---|---|
| Code | W | D | 25°C | 30°C | 35°C | 40°C | 25°C | 30°C | 35°C | 40°C | 25°C | 30°C | 35°C | 40°C | 25°C | 30°C | 35°C | 40°C | 25°C | 30°C | 35°C | 40°C | 25°C | 30°C | 35°C | 40°C |
| ES2244K | 400 | 400 | 186 | 233 | 282 | 333 | 169 | 212 | 256 | 303 | 165 | 207 | 251 | 296 | 150 | 188 | 228 | 269 | 148 | 186 | 225 | 266 | 135 | 169 | 204 | 241 |
| ES2245K | 400 | 500 | 221 | 277 | 335 | 396 | 204 | 256 | 310 | 366 | 196 | 245 | 297 | 351 | 180 | 226 | 274 | 324 | 172 | 216 | 262 | 309 | 159 | 200 | 242 | 285 |
| ES2246K | 400 | 600 | 255 | 320 | 388 | 458 | 239 | 300 | 364 | 429 | 225 | 283 | 342 | 404 | 210 | 264 | 320 | 377 | 195 | 245 | 296 | 350 | 183 | 229 | 278 | 328 |
| ES2248K | 400 | 800 | 325 | 408 | 494 | 583 | 311 | 390 | 472 | 557 | 283 | 355 | 431 | 508 | 269 | 338 | 409 | 483 | 240 | 302 | 365 | 431 | 230 | 289 | 350 | 413 |
| ES2240K | 400 | 1000 | 381 | 478 | 580 | 684 | 379 | 476 | 576 | 680 | 346 | 435 | 526 | 622 | 333 | 417 | 506 | 597 | 289 | 362 | 439 | 518 | 281 | 352 | 427 | 504 |
| ES2264K | 600 | 400 | 255 | 320 | 388 | 458 | 228 | 286 | 347 | 409 | 236 | 296 | 359 | 424 | 210 | 264 | 320 | 377 | 217 | 272 | 330 | 389 | 195 | 244 | 296 | 349 |
| ES2265K | 600 | 500 | 293 | 368 | 446 | 526 | 267 | 335 | 406 | 479 | 270 | 339 | 411 | 485 | 244 | 307 | 371 | 439 | 244 | 306 | 371 | 438 | 223 | 279 | 338 | 399 |
| ES2266K | 600 | 600 | 336 | 422 | 511 | 604 | 309 | 388 | 470 | 555 | 306 | 384 | 465 | 549 | 280 | 351 | 425 | 502 | 274 | 343 | 416 | 491 | 253 | 317 | 384 | 453 |
| ES2268K | 600 | 800 | 397 | 498 | 603 | 712 | 388 | 486 | 589 | 696 | 379 | 475 | 575 | 679 | 351 | 440 | 533 | 629 | 330 | 414 | 502 | 592 | 311 | 390 | 473 | 558 |
| ES2260K | 600 | 1000 | 453 | 568 | 689 | 813 | 443 | 556 | 673 | 795 | 420 | 527 | 638 | 753 | 417 | 523 | 633 | 747 | 391 | 490 | 594 | 701 | 374 | 470 | 569 | 672 |
| ES2284K | 800 | 400 | 325 | 408 | 494 | 583 | 287 | 360 | 436 | 515 | 306 | 385 | 466 | 550 | 269 | 338 | 409 | 483 | 287 | 360 | 436 | 515 | 255 | 320 | 387 | 458 |
| ES2285K | 800 | 500 | 368 | 462 | 559 | 660 | 334 | 420 | 508 | 600 | 349 | 438 | 531 | 627 | 311 | 390 | 472 | 558 | 322 | 404 | 490 | 578 | 291 | 365 | 442 | 521 |
| ES2287K | 800 | 600 | 397 | 498 | 603 | 712 | 382 | 479 | 580 | 685 | 385 | 483 | 585 | 690 | 351 | 440 | 533 | 629 | 355 | 446 | 540 | 637 | 324 | 407 | 493 | 582 |
| ES2288K | 800 | 800 | 461 | 579 | 701 | 827 | 444 | 556 | 674 | 796 | 434 | 545 | 660 | 779 | 424 | 532 | 644 | 761 | 415 | 521 | 631 | 745 | 398 | 499 | 604 | 714 |
| ES2280K | 800 | 1000 | 532 | 668 | 809 | 955 | 509 | 639 | 774 | 914 | 490 | 614 | 744 | 879 | 476 | 598 | 724 | 855 | 459 | 575 | 697 | 823 | 459 | 575 | 697 | 823 |
| ES2204K | 1000 | 400 | 381 | 478 | 580 | 684 | 350 | 439 | 532 | 628 | 375 | 471 | 570 | 674 | 333 | 417 | 506 | 597 | 362 | 454 | 550 | 650 | 320 | 401 | 486 | 574 |
| ES2205K | 1000 | 500 | 416 | 521 | 631 | 746 | 393 | 493 | 597 | 705 | 406 | 509 | 616 | 728 | 376 | 472 | 572 | 675 | 393 | 493 | 597 | 705 | 359 | 451 | 546 | 645 |
| ES2206K | 1000 | 600 | 453 | 568 | 689 | 813 | 429 | 538 | 651 | 769 | 434 | 545 | 660 | 779 | 417 | 523 | 633 | 747 | 422 | 529 | 641 | 757 | 402 | 505 | 612 | 722 |
| ES2208K | 1000 | 800 | 532 | 668 | 809 | 955 | 500 | 627 | 760 | 897 | 499 | 625 | 758 | 895 | 476 | 598 | 724 | 855 | 474 | 595 | 721 | 851 | 466 | 584 | 708 | 836 |
| ES2200K | 1000 | 1000 | 621 | 779 | 943 | 1114 | 578 | 725 | 879 | 1037 | 566 | 710 | 860 | 1015 | 538 | 674 | 817 | 964 | 526 | 660 | 799 | 944 | 514 | 645 | 782 | 923 |
| ES2224K | 1200 | 400 | 428 | 537 | 651 | 768 | 397 | 498 | 603 | 712 | 421 | 528 | 640 | 755 | 394 | 494 | 598 | 706 | 410 | 515 | 623 | 736 | 385 | 483 | 585 | 690 |
| ES2225K | 1200 | 500 | 472 | 592 | 717 | 846 | 438 | 549 | 665 | 785 | 455 | 571 | 692 | 817 | 428 | 538 | 651 | 769 | 445 | 558 | 676 | 799 | 430 | 540 | 654 | 772 |
| ES2226K | 1200 | 600 | 517 | 649 | 786 | 928 | 478 | 599 | 726 | 857 | 494 | 619 | 750 | 886 | 463 | 581 | 704 | 831 | 478 | 599 | 726 | 857 | 461 | 578 | 700 | 827 |
| ES2228K | 1200 | 800 | 614 | 770 | 932 | 1101 | 561 | 703 | 852 | 1006 | 571 | 716 | 867 | 1024 | 532 | 667 | 808 | 954 | 540 | 677 | 820 | 968 | 518 | 649 | 787 | 929 |
| ES2275K | 1600 | 500 | 613 | 769 | 932 | 1100 | 532 | 667 | 808 | 954 | 593 | 744 | 901 | 1064 | 513 | 643 | 779 | 920 | 568 | 713 | 863 | 1019 | 501 | 628 | 761 | 898 |
| ES2276K | 1600 | 600 | 675 | 846 | 1025 | 1210 | 591 | 742 | 898 | 1061 | 649 | 814 | 986 | 1164 | 567 | 711 | 861 | 1016 | 616 | 773 | 936 | 1106 | 549 | 689 | 835 | 985 |
| ES2279K | 1600 | 800 | 794 | 996 | 1206 | 1424 | 719 | 902 | 1093 | 1291 | 757 | 950 | 1150 | 1358 | 680 | 853 | 1033 | 1220 | 719 | 902 | 1093 | 1291 | 654 | 820 | 993 | 1173 |

Values also valid for the versions with glazed door.

# In-depth technical information
## Conformity with Standards

**Reference Standards**

- CEI 17-70 “Guide to application of the low voltage enclosure standards”
- CEI EN 60439-1 and new IEC 61439-1-2 Standard “Low voltage switchgear and controlgear assemblies (LV enclosures) Part 1: Assemblies subject to type tests (TTA) and assemblies partially subject to type tests (PTTA)”
- CEI EN 60529 (IEC 529-1) “Degrees of protection provided by enclosures (IP Code)”
- IEC 62262 “Degrees of protection provided by enclosures for electrical equipment against external mechanical impacts (IK Code)”
- CEI 17-43 (IEC 60890) “Method of temperature-rise assessment by extrapolation for partially type-tested assemblies (PTTA) of low voltage switchgear and controlgear (LV enclosures) not mass-produced”
- (*) CEI 17-52 (IEC 61117 “Method of assessment of the short-circuit withstand of switchgear and controlgear assemblies not massproduced (PTTA)”
- CEI EN 62208 “Empty enclosures for low voltage switchgear and controlgear assemblies. General prescriptions”
- CEI EN 60204-1 (IEC 60204-1) “Safety of machinery – Electrical equipment of machines. Part 1: General requirements”
- IEEE Std 693 “Recommended Practice for Seismic Design of Substation”

**Laws which have implications for electrical enclosures**

The new series of IS2 enclosures comply with the national laws regulating responsibility regarding the matter of electrical apparatus and assemblies.

- Law 187/68, in which the following is stated: Art.1. All the materials, apparatus, machinery, assemblies and electrical and electronic plants must be professionally made and constructed. Art.2. The materials, apparatus, machinery, assemblies and electrical plants built according to the Italian Electrotechnical Committee are considered to be constructed professionally.
- The 2006/95/EC Low voltage Directive (which replaces 73/23/EEC and subsequent amendments) indicates what characteristics the electrical material commercialised must have. In this case, the technical references are the Harmonised European Standards, and in case of their lacking, the IEC publications and, in order, National Standards.
- Legislative Decree n° 626 of 25 November 1996, implementation of the 93/68 EEC Directive on the matter of CE marking for the Low voltage Directive, modified with Legislative Decree n° 227 of 31 July 1997.
- Law 46/90 and Decree of implementation DPR n° 447 of 6 December 1991; introduce the obligation for the installer to issue the customer with a declaration of conformity with the Law relative to the plant and to which a report with the type of components used must be attached.
- Directive 1999/92/EC and 94/9/EC Directive Minimum requirements for improvement of safeguarding the health and safety of workers who may be exposed to the risk of explosive atmospheres

# In-depth technical information
## Mechanical shock resistance IK

**IK degree of resistance to impacts**
The method specified in the IEC 62262 Standard to determine the IK degree of resistance to impact is indicated in the table below.

It specifies the resistance of equipment to impact. The proof consists in let a weight falling down from a pre-established height.
The degree of resistance to impacts is therefore obtained and it is expressed in Joules.

**The IK is expressed in Joule in compliance with the requirements of IEC 62262.**

**IK 0**
Not protected

**IK 01**
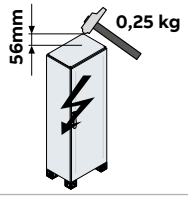

Impact energy in Joule 0.140

**IK 02**
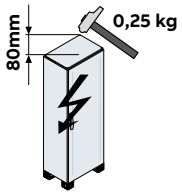

Impact energy in Joule 0.200

**IK 03**
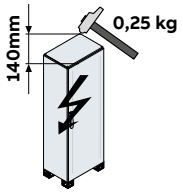

Impact energy in Joule 0.350

**IK 04**
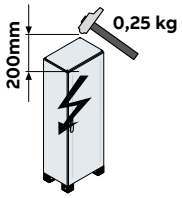

Impact energy in Joule 0.500

**IK 05**
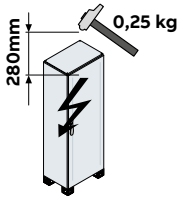

Impact energy in Joule 0.700

**IK 06**
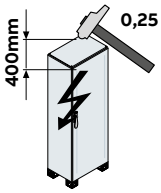

Impact energy in Joule 1.00

**IK 07**
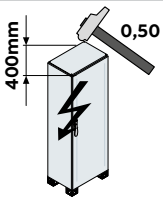

Impact energy in Joule 2.00

**IK 08**
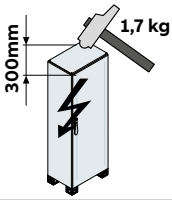

Impact energy in Joule 5.00

**IK 09**
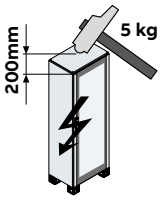

**System pro E power**
Glass door
Impact energy in Joule 10.00

**IK 10**
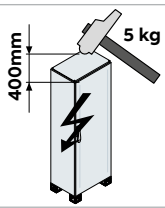

**System pro E power**
Blind door
Impact energy in Joule 20.00

**Test performed according to the IEC 62262 Standard**
Degree of protection provided by enclosures for electrical equipment against external mechanical impacts (IK Code).

| | With blind door | With glass door |
|---|---|---|
| **IS2 enclosure console/PC/compartment** | IK10 | 08 |
| **IS2 EMC Enclosures** | IK10 | |

# In-depth technical information
## IP Protection classes

| 1st DIGIT: protection against solid objects | | 2nd DIGIT: Protection against liquids | |
|---|---|---|---|
| 0 | No protection | 0 | No protection |
| 1 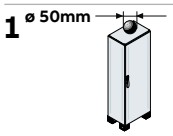  | Protected against solid objects larger 50mm (accidental contact with the hands) | 1 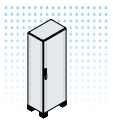 | Protected against vertically dripping water (condensation) |
| 2 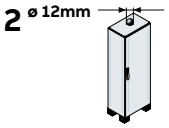  | Protected against solid objects larger than 12mm (fingers) | 2 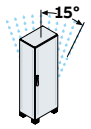  | Protected against water dripping at an angle up to 15° from the vertical |
| 3 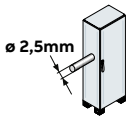  | Protected against solid objects larger than 2.5mm (tools, wires) | 3 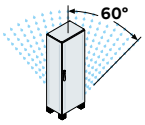  | Protected against rain falling at an angle up to 60° from the vertical |
| 4 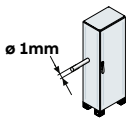  | Protected against solid objects larger than 1mm | 4 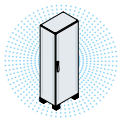 | Protected against water splashing from all directions |
| 5 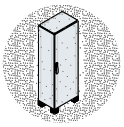 | Protected against dust (no harmful deposits) | 5 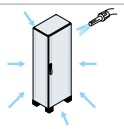 | Protected against jets of water sprayed from all directions |
| 6 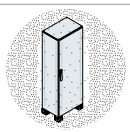 | Totally protected against dust | 6 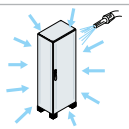 | Protected against jets of water similar to waves |
| | | 7 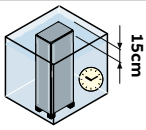  | Protected against the effects of temporary immersion |
| | | 8 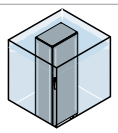 | Protected against the effects of continuous immersion |

**Tests carried out in accordance with IEC EN 60529. Degree of protection of the enclosures (IP code)**

| | With blind door | With cover Hinged/ screwed | With door and panel ventilated/ airconditioning | With closing profile |
|---|---|---|---|---|
| **IS2 enclosure console/PC/compartment** | IP41 | IP41 | IP41 | |
| **IS2 EMC Enclosures** | IP54 | IP54 | | |
| **IS2 Enclosures without door** | IP55 | IP55 | | IP31 |

# In-depth technical information

## IP Protection classes

**Protection against ingress of solid objects**

| 1st characteristic digit | Brief description | Full description |
|---|---|---|
| **0** | Not protected | No particular protection is envisaged |
| **1** | Protected against solid objects larger than 50mm | A large area of the human body, for example a hand (however, voluntary protection is not envisaged) or solid objects larger than 50mm in diameter must not be able to penetrate |
| **2** | Protected against solid objects measuring | The fingers or similar objects measuring 80mm or solid objects more than 12mm in diameter must not be able to penetrate |
| **3** | Protected against solid objects measuring more than 2.5mm | Tools, wires, etc., more than 2.5mm in diameter or thickness or solid objects more than 2.5mm in diameter must not be able to penetrate |
| **4** | Protected against solid objects measuring more than 1.0mm | Wires or flat cables more that 1.0mm thick or solid objects more than 1.0mm in diameter must not be able to penetrate |
| **5** | Protected against dust | Penetration of dust is not totally excluded but the quantity that may penetrate is not sufficient to impair the correct operation of the material |
| **6** | Totally protected against dust | No dust penetration is permitted |

**Protection against ingress of water**

| 2nd characteristic digit | Brief description | Full description |
|---|---|---|
| **0** | Not protected | No particular protection is envisaged |
| **1** | Protected against dripping water | Drops of water falling vertically must not produce harmful effects |
| **2** | Protected against water dripping at a maximum angle of 15° | Drops of water falling vertically must not produce harmful effects when the enclosure is tilted at any angle up to 15° from its normal position |
| **3** | Protected against rainfall | Water falling as a spray at any angle up to 60° from the vertical shall have no harmful effects |
| **4** | Protected against splashing water | Water splashing against the enclosure from any direction shall have no harmful effects |
| **5** | Protected against water jets | Water projected by a nozzle from any direction shall have no harmful effects |
| **6** | Protected against waves | Waves or powerful water jets shall not penetrate the enclosure in harmful quantities |
| **7** | Protected against the effects of temporary immersion | Ingress of water in harmful quantities shall not be possible when the enclosure is immersed in water under defined conditions of pressure and time |
| **8** | Protected against the effects of continuous immersion | The equipment is suitable for continuous immersion under conditions which shall be specified by the manufacturer |

# In-depth technical information
## Special paining

### Standardised RAL colours (on request)

On request, colours other than the standard RAL 7035 orange peel are available with the same painting cycle. For every request regarding special colours, please contact ABB.

**Available RAL colors chart (minimum lot 3 structures)**

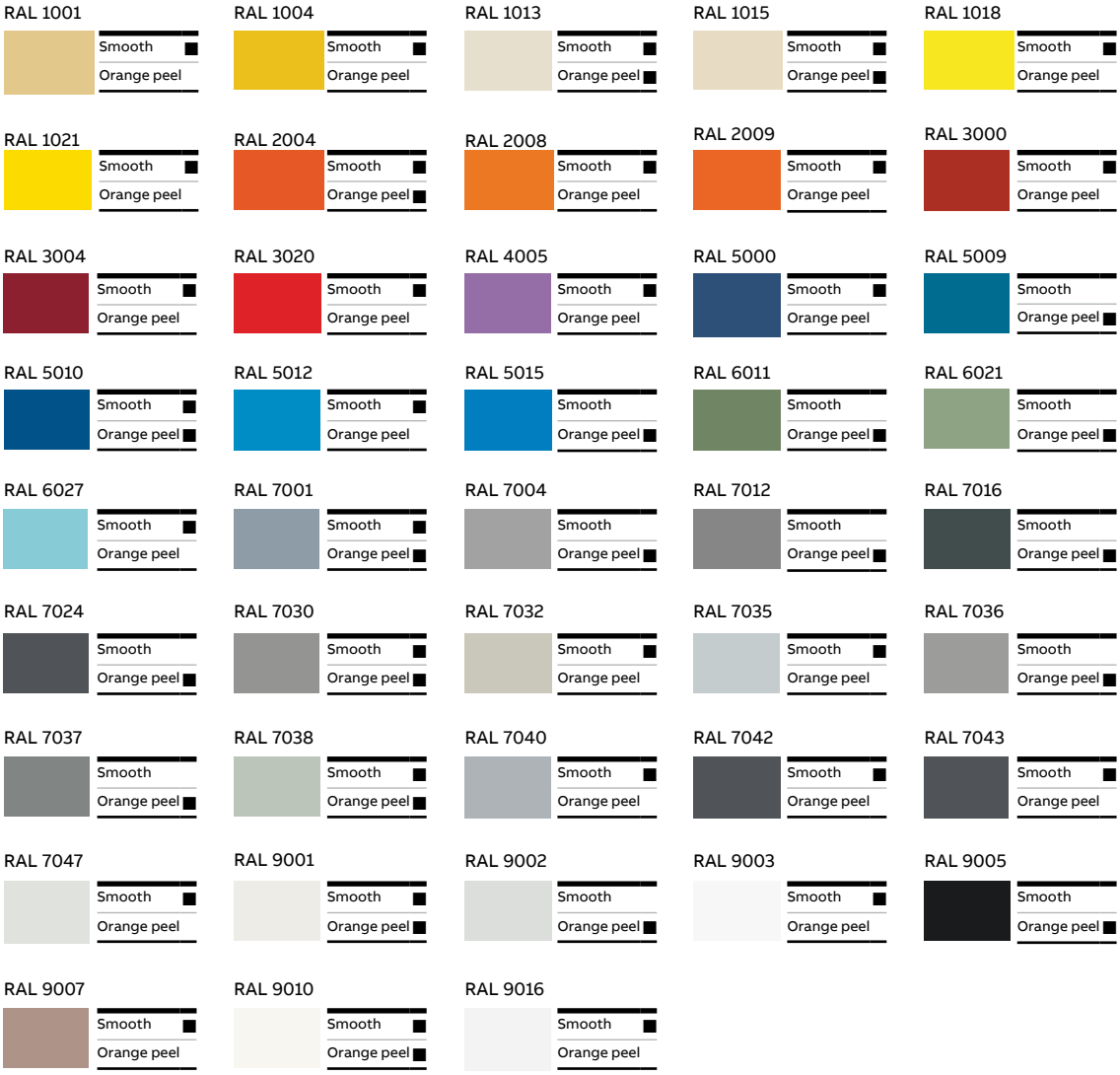


### Corrosion test in saline mist

(Ref. Standard UNI ISO 9227, CEI50-5/4, IEC 60068-2-30)

| Treatment time (hours) | 24 | 48 | 72 | 96 | 120 | 144 | 168 | 192 |
|---|---|---|---|---|---|---|---|---|
| Rust penetration | no | no | no | no | no | no | no | 193[1] |
| Blistering | no | no | no | no | no | no | no | no |

[1] When a tearing test with adhesive tape is carried out after 193 hours of exposure, about 3 mm of paint detachment can be noted from the notch area with 1-1.5 mm rust penetration.

# In-depth technical information
## NEMA Classification

NEMA “National Electrical Manufacturers Association” Classification

| Type | Description | Products classified |
|---|---|---|
| 1 | Enclosures constructed for indoor use to provide a degree of protection to personnel against incidental contact with the enclosed equipment and to provide a degree of protection against falling dirt. | IS2 |
| 2 | Enclosures constructed for indoor use to provide a degree of protection to personnel against incidental contact with the enclosed equipment, to provide a degree of protection against falling dirt, and to provide a degree of protection against dripping and light splashing of non-corrosive liquids. | |
| 3 | Enclosures constructed for either indoor or outdoor use to provide a degree of protection to personnel against incidental contact with the enclosed equipment; to provide a degree of protection against falling dirt, rain, sleet, snow, and windblown dust; and that will be undamaged by the external formation of ice on the enclosure. | |
| 3R* | Enclosures constructed for either indoor or outdoor use to provide a degree of protection to personnel against incidental contact with the enclosed equipment; to provide a degree of protection against falling dirt, rain, sleet, and snow; and that will be undamaged by the external formation of ice on the enclosure. | IS2 |
| 3S | Enclosures constructed for either indoor or outdoor use to provide a degree of protection to personnel against incidental contact with the enclosed equipment; to provide a degree of protection against falling dirt, rain, sleet, snow, and windblown dust; and in which the external mechanism(s) remain operable when ice laden. | |
| 4 | Enclosures constructed for either indoor or outdoor use to provide a degree of protection to personnel against incidental contact with the enclosed equipment; to provide a degree of protection against falling dirt, rain, sleet, snow, windblown dust, splashing water, and hose-directed water; and that will be undamaged by the external formation of ice on the enclosure. | |
| 4x | Enclosures constructed for either indoor or outdoor use to provide a degree of protection to personnel against incidental contact with the enclosed equipment; to provide a degree of protection against falling dirt, rain, sleet, snow, windblown dust, splashing water, hosedirected water, and corrosion; and that will be undamaged by the external formation of ice on the enclosure. | |
| 5 | Enclosures constructed for indoor use to provide a degree of protection to personnel against incidental contact with the enclosed equipment; to provide a degree of protection against falling dirt; against settling airborne dust, lint, fibers, and flyings; and to provide a degree of protection against dripping and light splashing of non-corrosive liquids. | |
| 6 | Enclosures constructed for either indoor or outdoor use to provide a degree of protection to personnel against incidental contact with the enclosed equipment; to provide a degree of protection against falling dirt, rain, sleet, snow, hose-directed water, and the entry of water during occasional temporary submersion at a limited depth, and that will be undamaged by the external formation of ice on the enclosure. | |
| 6P | Enclosures constructed for either indoor or outdoor use to provide a degree of protection to personnel against incidental contact with the enclosed equipment; to provide a degree of protection against falling dirt, rain, sleet, snow, hose-directed water, corrosion and the entry of water during prolonged submersion at a limited depth; and that will be undamaged by the external formation of ice on the enclosure. | |
| 12 | Enclosures constructed (without knockouts) for indoor use to provide a degree of protection to personnel against incidental contact with the enclosed equipment; to provide a degree of protection against falling dirt, against circulating dust, lint, fibers, and flyings; against dripping and light splashing of non-corrosive liquids; and against light splashing and consequent seepage of oil and non-corrosive coolants. | IS2 |
| 12K | Enclosures constructed (with knockouts) for indoor use to provide a degree of protection to personnel against incidental contact with the enclosed equipment; to provide a degree of protection against falling dirt, against circulating dust, lint, fibers, and flyings; against dripping and light splashing of non-corrosive liquids; and against light splashing and consequent seepage of oil and non-corrosive coolants. | IS2 |
| 13 | Enclosures constructed for indoor use to provide a degree of protection to personnel against incidental contact with the enclosed equipment; to provide a degree of protection against falling dirt, against circulating dust, lint, fibers, and flyings; and against the spraying, splashing, and seepage of water, oil, and non-corrosive coolants. | |

* Type 3R has been assigned to enclosure provided with protective hood.

# In-depth technical information
## ATEX Certification

**TABLE 1 - GROUPS, CATEGORIES AND LEVELS OF PROTECTION**
(source: Atex Guide – first edition - European Commission DG Enterprises, May 2000)

| Level of protection | Group I | Group II | Protection performances | Operating conditions* |
|---|---|---|---|---|
| Very high | M1 | | Two independent means of protection or safety guaranteed even when two faults independent of each other occur | The apparatus remains supplied and in operation even in the presence of an explosive atmosphere |
| Very high | | 1 | Two independent means of protection or safety guaranteed even when two faults independent of each other occur | The apparatus remains supplied and in operation even in areas 0, 1, 2 (G) and/or 20, 21, 22 (D) |
| High | M2 | | Protection suited to normal operation and heavy operating conditions [37] | The power supply is cut off to the apparatus in the presence of an explosive atmosphere |
| High | | 2 | Protection suited to normal operation and to frequent disturbances during which the faults are normally taken into account | The apparatus remains supplied and in operation in areas 1, 2 (G) and/or 21, 22 (D) |
| **IS2 Enclosures** | | | | |
| Normal | | 3 | Protection suited to normal operation | The apparatus remains supplied and in operation in areas 2 (G) and/or 22 (D) |

* Note: Also see directive 1999/92/CE regarding the minimum prescriptions for improving safety and health of the workers who may be exposed to the hazard of explosive atmospheres [38].
[37] Although the wording of the requirements of apparatus belonging to categories M2 and 2 is different in the relative attachments to directive 94/9/CE, both categories are treated in parallel by the IEC 50014 standard and by the specific regulations. The concepts of technical protection relative to electrical apparatus belonging to category M2 and 2G (gas) in conformity with the IEC 50014 standard are identical. The requirements relative to category 2D (dusts) may, on the other hand, need to be considered separately.
[38] GU L23, of 28.1.2000.

**TABLE 2 - CHARACTERISTICS AND AREAS CORRESPONDING TO EQUIPMENT IN GROUP II**
(source: "Guide to certification - Directive 94/9/CE - Atex – on the subject of products destined to be used in potentially explosive atmospheres" - Ispesl)

| **MANUFACTURER** | | | | | | **USER** | |
|---|---|---|---|---|---|---|---|
| DPR 126/98 - Directive 94/9/CE Additional requirements for equipment (including the devices and components connected with it) | | | | | | **D.Lgs. 233/03 Direttiva 1999/92/CE)** | |
| | | | **Means of protection** | | | | |
| **Group** | **Category** | **Level** | **Protection characteristics (Annex. I)** | **Construction characteristic (Annex. II)** | **Applicable RES** | **Presence of explosive atmosphere** | **Area of use** |
| II | 1 | Very high | In the case of a fault in a means of protection the level of safety is guaranteed by at least one second independent means of protection. Furthermore, the level of safety is also guaranteed if two anomalies independent of each other occur | Must be designed and constructed so that the ignition sources are not activated, even in the case of anomalies | 1.0<br>1.1<br>1.2<br>1.3<br>1.4<br>1.5<br>1.6<br>2.1 | Continuous or for long periods of time | 0<br>1<br>2<br><br>20<br>21<br>22 |
| | 2 | High | The level of safety is guaranteed even in the presence of recurring anomalies or operating defects of the equipment which must normally be taken into account | Must be designed and constructed so as to preclude the ignition sources even in the case of recurring anomalies or operating defects of the equipment which must normally be taken into account | 1.0<br>1.1<br>1.2<br>1.3<br>1.4<br>1.5<br>1.6<br>2.2 | Intermediate situation between the previous and the following one | 1<br>2<br><br>21<br>22 |
| **IS2 Enclosures** | | | | | | | |
| | 3 | Normal | The level of safety is guaranteed during normal operation | Must be designed and constructed so as to preclude the sources of ignition which can be anticipated during normal operation | 1.0<br>1.1<br>1.2<br>1.3<br>1.4<br>1.5<br>1.6<br>2.3 | Scarce probability and if it occurs it is of short duration | 2<br>22 |

# In-depth technical information
## Electrical continuity



### Electrical continuity of the structure and of the fixed and moving parts

—
01
Electrical continuity of the structure in the IS2 cabinets is automatically guaranteed just with assembly of the structure, without the use of dedicated accessories.

—
02
In the case of modular panels, electrical continuity is guaranteed in the closed position by the special shape of the hinge (ABB patent).

—
03
The special shape of the hinges also allows connection by means of traditional copper braids (to be installed if the panel can be opened).

—
04
The blind and glazed doors, side panels, rear panels and roofs are fitted with M6 copper captive self-removing paint screws for earthing (test report LBRP14175/00).

—
01

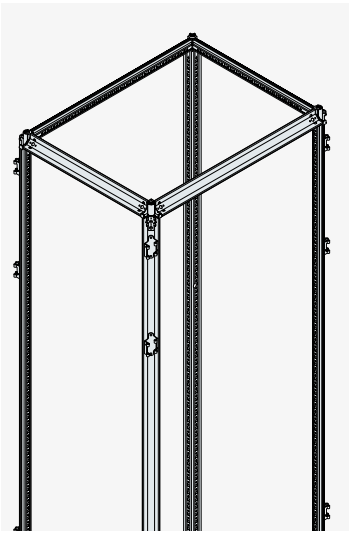

—
02

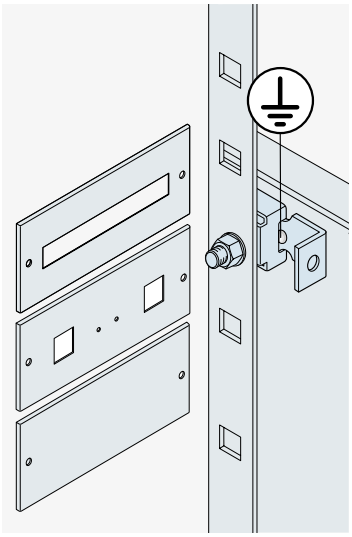

—
03

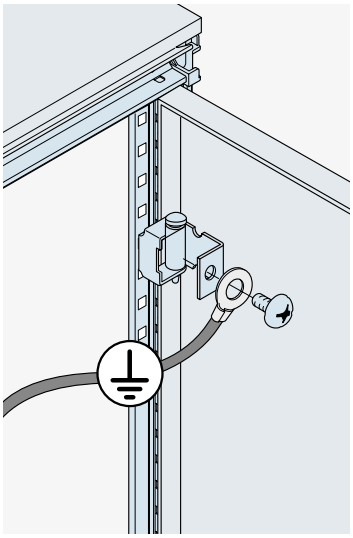

—
04

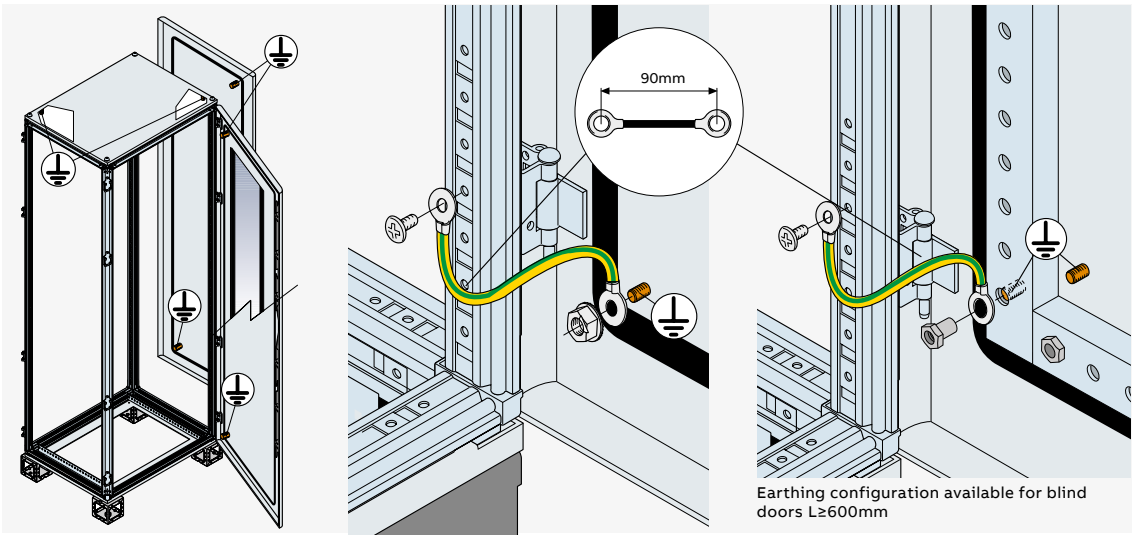


Earthing configuration available for blind doors L≥600mm

Tests performed according to IEC 62208 (par. 7.7) Standard Empty enclosures for low voltage protection switchgear and controlgear assemblies. General prescriptions.

# In-depth technical information

## Electrical continuity

**Electrical continuity**

The IEC 60439-1 and new 61439-1-2 standard indicates the methods for calculating the cross-section of the PE protection conductor which must be suitably sized to withstand the thermal and dynamic components of the fault currents. The following conditions must be verified when identifying the fixing position of the busbar:

- the busbar must be connected directly to the earthed parts of the enclosure (structure);
- the busbar must be connected in an easily accessible position.

For sizing, use the values in the table, taken from the CEI EN60439-1 Standard and new IEC 61439-1-2 Standard (P.7.4.3.1.7)

| S (mm²) | | | | | SP (mm²) |
|---|---|---|---|---|---|
| | | S | ≤ | 16 | S |
| 16 | < | S | ≤ | 35 | 16 |
| 35 | < | S | ≤ | 400 | S/2 |
| 400 | < | S | ≤ | 800 | 200 |
| | | S | > | 800 | S/4 |

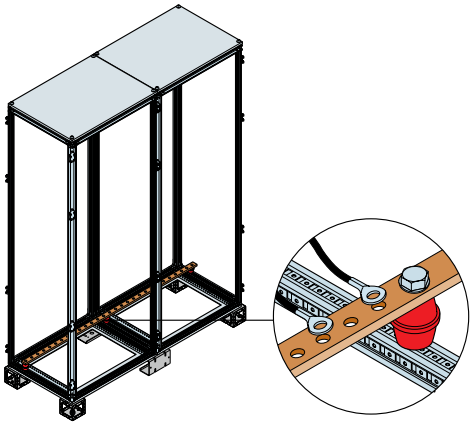

The conductors must be connected individually

**Equipotentiality**

The accessible conductive parts of a device, which cannot be connected to the protection circuit by means of its own means of connection, must be connected to the protection circuit of the apparatus for equipotentiality of the protection by means of an equipotential conductor, whose cross-section must be selected according to the table given below.

| Rated service current Ie (A) | | | | | Minimum cross-section of the equipotential protection conductor (mm²) |
|---|---|---|---|---|---|
| | | Ie | ≤ | 20 | S |
| 20 | < | Ie | ≤ | 25 | 2.5 |
| 25 | < | Ie | ≤ | 32 | 4 |
| 32 | < | Ie | ≤ | 63 | 6 |
| 63 | < | Ie | | | 10 |

S = cross-section of the phase conductor (mm²)

**PEN conductor**

The cross-section of the PEN conductors of a piece of apparatus must be determined using the same procedure as the one followed for the neutral conductor (N). The minimum cross-section of a copper conductor must be 10mm2. The PEN conductor does not need to be insulated. The parts of the structure must not be used as PEN conductors. However, the assembly tracks, either in copper or aluminium, can be used as PEN conductors. For conductors not made of copper, the above cross-sections are replaced with crosssections of equivalent conductivity, which may require larger sized terminals.

# In-depth technical information
## Handling

### Handling

**Handling by means of transpallets**

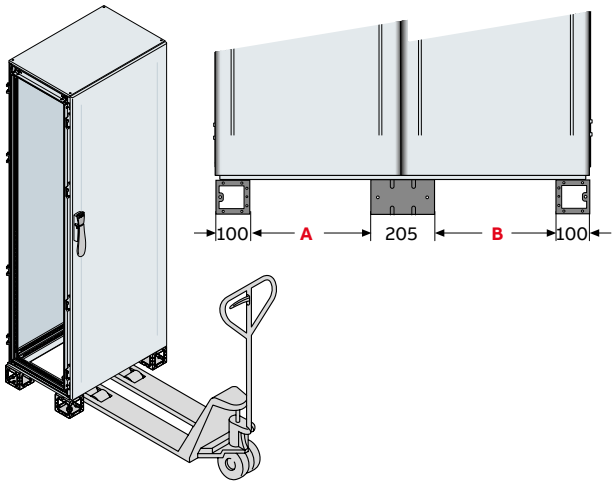


**Palletisable plinth**

| | A (mm) | B (mm) |
|---|---|---|
| External cable container W=300mm | 88 | |
| Structure W=400mm | 188 | |
| Structure W=600mm | 388 | |
| Structure W=800mm | 588 | |
| Structure W=1000mm | 788 | |
| Structure W=1200mm | 391.5 | 391.5 |
| Structure W=1600mm | 591.5 | 591.5 |

**Handling by rollers**

Handling IS2 structures by means of rollers: only with EZ... reinforced plinth.

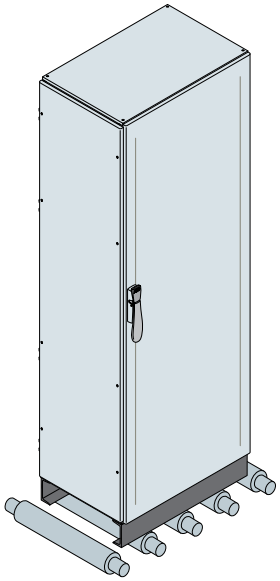

For greater safety during transport by means of a fork-lift truck, it is advisable to anchor the enclosure to the fork-lift truck:

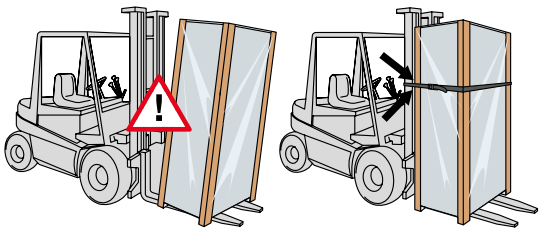

In the case of W=800mm structures (with internal or external cable container) containing a busbar system, check the centre of gravity before handling.

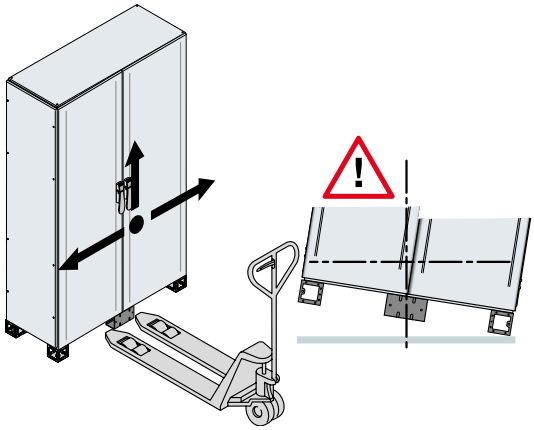

# In-depth technical information
## Handling

**Handling by means of bridge crane**
For handling by means of crane or bridge crane, check the following conditions before lifting the enclosure:

- excellent state of the ropes or chains;
- the angle between the lifting ropes and the roof of the switchboard must be ≥45°;
- maximum number of columns which can be trsnsported see pages 7-30;
- maximum weight which can be lifted see pages 7-31.
- When there are several columns placed side by side, to respect the above-mentioned conditions, a lifting beam with appropriate characteristics can be used.s.

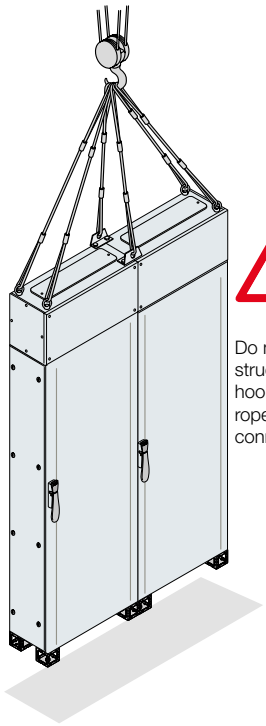

Do not lift the structures by hooking up the ropes to the connection box.

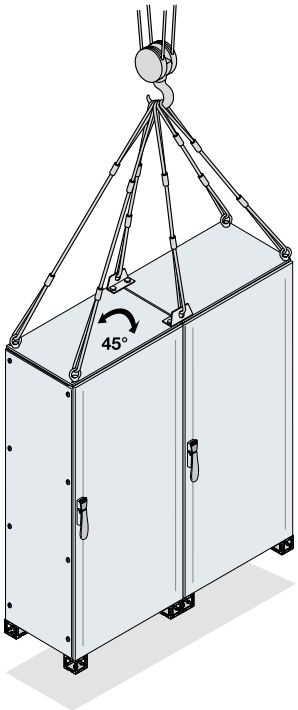


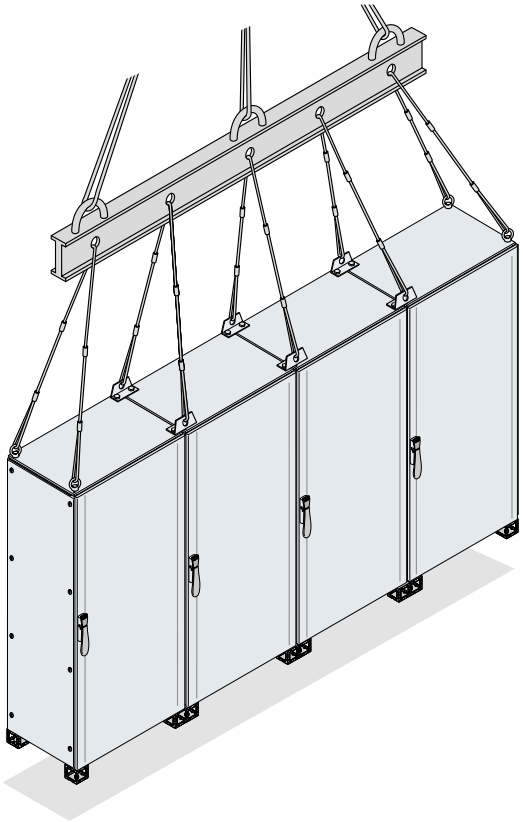

Tests carried out according to IEC 62208 (par. 8.4) Standard Empty enclosures for low voltage protection switchgear and controlgear assemblies. General prescriptions.

**DIN 580 Standard regarding mechanical connection elements (only for lifting eyebolts)**

**Eyebolts**

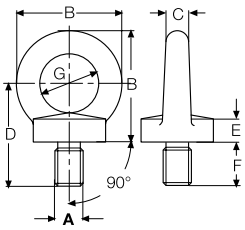


**Lifting reinforcements**

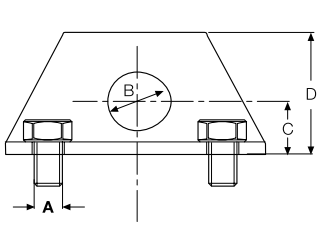


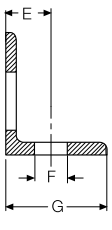


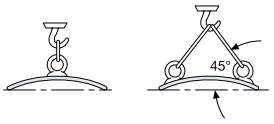


| A | B (mm) | C (mm) | D (mm) | E (mm) | F (mm) | G (mm) | Load 1 (kg) | Load 2 (kg) | Tightening (Nm) |
|---|---|---|---|---|---|---|---|---|---|
| **Eyebolts** | | | | | | | | | |
| M12 | 54 | 12 | 28 | 10 | 22 | 30 | 340 | 240 | 8* |
| **Lifting reinforcements** | | | | | | | | | |
| M12 | Ø40 | 37 | 80 | 25 | Ø14 | 60 | 510 | 350 | 40 |

# In-depth technical information
## Maximum capacities

**In accordance with the IEC 62208 Standard**

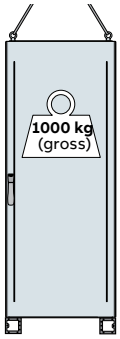


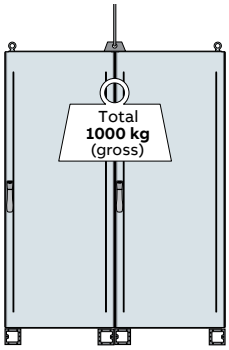


| | IS2 |
|---|---|
| Number of columns | 1 |
| Weight of single column Kg | 1000 |
| Total weight of columns Kg | 1000 |
| Joining Kit | |
| Lifting Kit | TA5510 |
| Number of braces used | 4 |

| | IS2 | IS2 EMC |
|---|---|---|
| Number of columns | 2 | 2 |
| Weight of single column Kg | 500 | 500 |
| Total weight of columns Kg | 1000 | 1000 |
| Joining Kit. The joining of the angle pieces ZN1010 can be obtained by means of M5 screws | EV0002 | EV0002 |
| | EV0003 | EV0006EMC |
| Lifting Kit | EV1007 | EV1007 |
| Number of braces used | 2 | 2 |

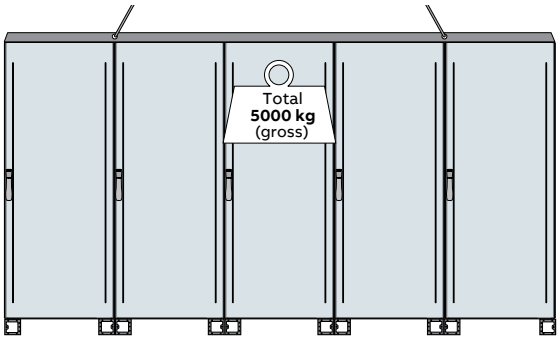


| | IS2 | IS2 EMC |
|---|---|---|
| Number of columns | 5 | 5 |
| Weight of single column Kg | 1000 | 1000 |
| Total weight of columns Kg | 5000 | 5000 |
| Joining Kit | EV0003 | EV0006EMC |
| | By means of TU1000 | By means of TU1000 |
| Lifting Kit | 4 | 4 |
| Number of braces used | 4 | 4 |

# In-depth technical information

## Maximum capacities

### In accordance with the IEC 62208 Standard

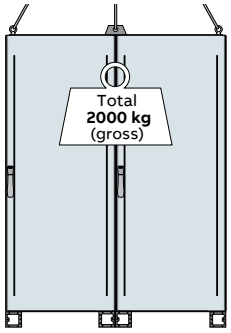


| | IS2 | IS2 EMC |
|---|---|---|
| Number of columns | 2 | 2 |
| Weight of single column Kg | 1000 | 1000 |
| Total weight of columns Kg | 2000 | 2000 |
| Joining Kit | EV0002 | EV0002 |
| | EV0003 | EV0006EMC |
| Lifting Kit | AA9610 | AA9610 |
| | EZ1007 | EZ1007 |
| Number of braces used | 6 | 6 |

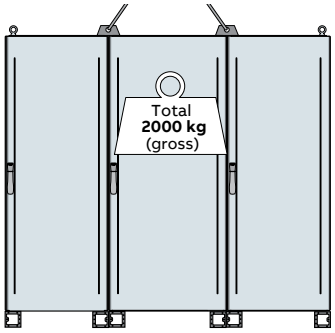


| | IS2 | IS2 EMC |
|---|---|---|
| Number of columns | 2 | 2 |
| Weight of single column Kg | 1000 | 1000 |
| Total weight of columns Kg | 2000 | 2000 |
| Joining Kit. The joining of the angle pieces ZN1010 can be obtained by means of M5 screws | EV0002 | EV0002 |
| | EV0003 | EV0006EMC |
| Lifting Kit | AA9610 | AA9610 |
| | EZ1007 | EZ1007 |
| Number of braces used | 6 | 6 |

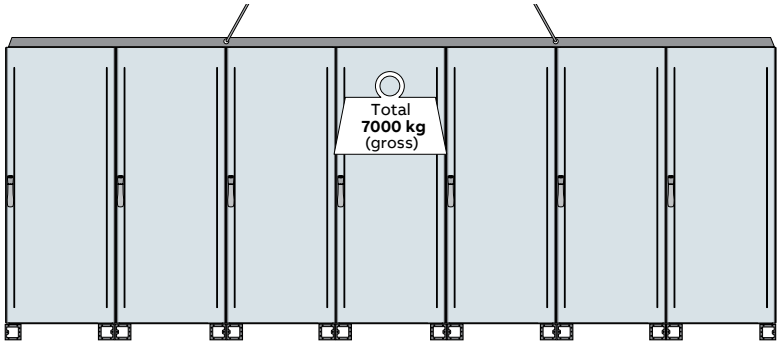


| | IS2 | IS2 EMC |
|---|---|---|
| Number of columns | 7 | 7 |
| Weight of single column Kg | 1000 | 1000 |
| Total weight of columns Kg | 7000 | 7000 |
| Joining Kit | EV0003 | EV0006EMC |
| | TU1000 | TU1000 |
| Lifting Kit | By means of TU1000 | By means of TU1000 |
| Number of braces used | 4 | 4 |

### Fitten weels

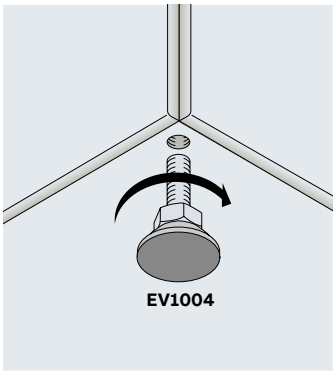


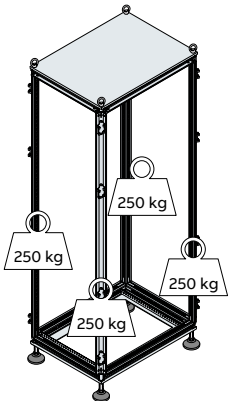


### Braked weels

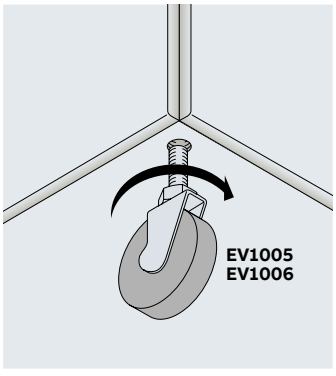


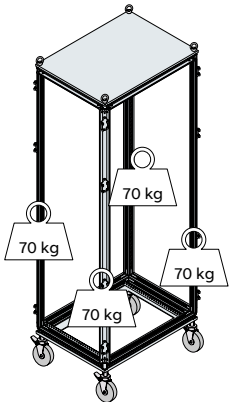

# In-depth technical information

## Maximum capacities

### In accordance with the IEC 62208 Standard

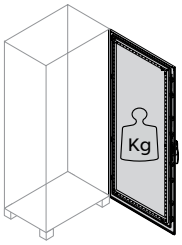

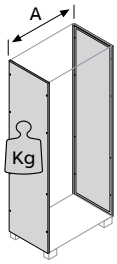

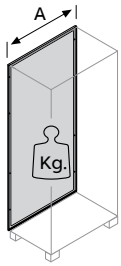

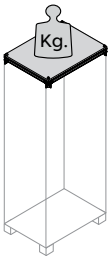

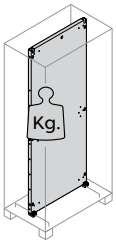


| | Door | Side panels | | Rear panels | | Roof | Standard mounting plate |
|---|---|---|---|---|---|---|---|
| | Kg | A (mm) | Kg | A (mm) | Kg | Kg | Kg |
| IS2 | 50 | > 800 | 90 | > 800 | 90 | 40 | 500 |
| | | ≤ 800 | 110 | ≤ 800 | 110 | | |

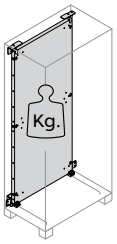

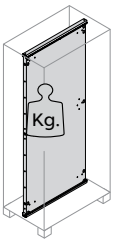

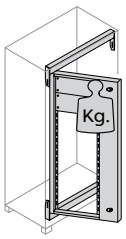

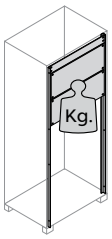

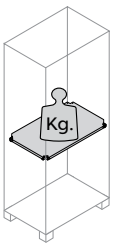


| | Kit for moving back plate back | | Oversized mounting plate | Swing rack frame | Fixed rack frame | Horizontal parition panel |
|---|---|---|---|---|---|---|
| | Code | Kg | Kg | Kg | Kg | Kg |
| IS2 | EA2100 | 600 | 500 | 90 | 90 | 120 |

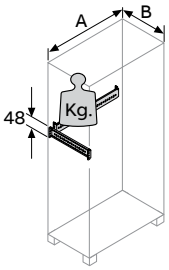

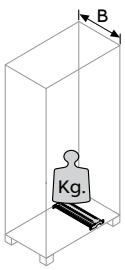

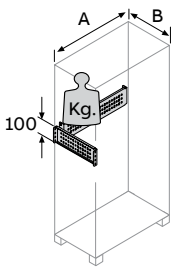

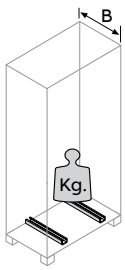


| Crossipeces H = 48mm | | | Crossieces for fixing heavy accessories | | | Crossipeces H =100mm | | | Trasformer older crosspieces | | |
|---|---|---|---|---|---|---|---|---|---|---|---|
| Code | A/B (mm) | Kg | Code | A/B (mm) | Kg | Code | A/B (mm) | Kg | Code | A/B (mm) | Kg |
| EB0400 | 400 | 110 | EB4100 | 400 | 210 | EB0440 | 400 | 220 | EB6102 | 600 | 320 |
| EB0500 | 500 | 110 | EB5100 | 500 | 190 | EB0550 | 500 | 210 | EB8102 | 800 | 250 |
| EB0600 | 600 | 100 | EB6100 | 600 | 175 | EB0660 | 600 | 210 | EB1102 | 1000 | 200 |
| EB0800 | 800 | 90 | EB8100 | 800 | 150 | EB0880 | 800 | 185 | | | |
| EB1000 | 1000 | 70 | EB1100 | 1200 | 130 | EB1010 | 1000 | 160 | | | |
| EB1200 | 1200 | 50 | | | | EB1020 | 1200 | 140 | | | |

# In-depth technical information

## Maximum capacities

**In accordance with the IEC 62208 Standard**

| Rack code | Code | IS2 |
|---|---|---|
| Fixed rack frame “L” shaped profile 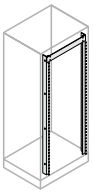 | EG1400<br>EG1600<br><br>EG1800<br>**EG2000**<br>**EG2200**<br><br>**EG1880**<br>EG2080<br>EG2280 | 90 kg with one frame<br>250 kg with two frame (the frame can be fixed on the front or rear uprights; for intermediate frame mounting use EM1804, EM2004 or EM2204) |
| Swing rack frame “L” shaped profile 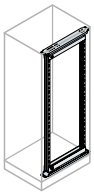 | EG1405<br>EG1605<br><br>EG1801K<br>EG2001K<br>EG2201K<br><br>EG1803K<br>EG2003K<br>EG2203K | 90 Kg |
| 19” cranked shaped uprights 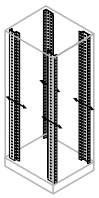 | EG1805<br>EG2005<br>EG2205 | 1000 kg with 4 uprights on shelves 250 kg with 2 uprights |
| Swing rack frame “C” shaped upright 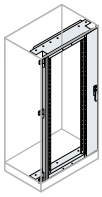 | EG1804K<br>EG2004K<br>EG2204K | 120 kg<br>160 kg with extra central EV0004 180° hinge |

| Rack code | Code | IS2 |
|---|---|---|
| Universal shelves 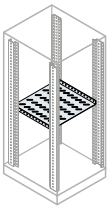 | EV0400<br>EV0600<br>EV0800 | 20 kg |
| Adjustable in depth shelf 1HE 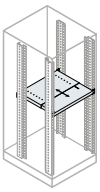 | EV0041 | 80 kg |
| Withdrawable shelves 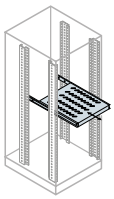 | EV3500<br>EV5000 | 40 kg |
| Fixed Shelves for apparatus 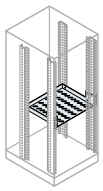 | EV1385<br>EV2385 | 20 kg |

## Mechanical and electrical characteristics

**Conformity with IEC 60439-1 and new IEC 61439-1-2 Standard**

The IS2 cabinets have undergone the type tests foreseen by the IEC 60439-1 and new IEC 61439-1-2 Standard in ABB laboratories. The results of these tests guarantee the performances of the IS2 cabinets and, by using ABB SACE metalwork structures and accessories, such as moulded-case and modular circuit-breakers, allow the end enclosure builder not to carry out further type tests, as long as the selection criteria and assembly instructions of the various components are respected, just carrying out the individual tests foreseen by the IEC 61439-1-2 Standard. It is possible to make reference to these results, given below, to draw up the declaration of conformity of the electrical enclosure.placed with crosssections of equivalent conductivity, which may require larger sized terminals.

| Components | Material |
|---|---|
| Busbars | electrolytic copper 99.9% CU-ETP |
| Busbar holder | self-extinguishing thermoplastic VO |
| Tightening screws | Material class 8.8 |
| Tightening torque | M6 screws - 10N.m |
| | M8 screws - 20N.m |
| | M10 screws - 30N.m |

# In-depth technical information
## Busbars with shaped section

**Technical characteristics of busbars with shaped section up to 1600A**

| Cross-section | In (A) | Type | No. busbars/ phase | Capacity (A) IP66 | Icw max (kA) | IpK (kA) | Dimensions WxW (mm) | Cross-section (mm²) | Lenght (mm) | Weight (kg) |
|---|---|---|---|---|---|---|---|---|---|---|
|  | 400 | **BA0400** | 1 | 400 | 35 | 74 | 20x20 | 200 | 1730 | 4 |
|  | 800 | **BA0800** | 1 | 800 | 35 | 74 | 20x20 | 283 | 1730 | 4.4 |
| 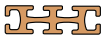 | 1250 | **BA1250** | 1 | 1250 | 65 | 143 | 20x60 | 603 | 1730 | 9.3 |
|  | 1600 | **BA1600** | 1 | 1600 | 65 | 143 | 20x60 | 703 | 1730 | 10 |

**Technical characteristics of flat busbars up to 1600A**

| Cross-section | In (A) | Type | No. busbars/ phase | Capacity (A) IP66 | Icw max (kA) | IpK (kA) | Dimensions WxW (mm) | Cross-section (mm²) | Weight (kg) |
|---|---|---|---|---|---|---|---|---|---|
|  | 250 | **BR0250** | 1 | 250 | 32 | 48 | 15X5 | 1750 | 1.35 |
|  | 400 | **BR0400** | 1 | 400 | 32 | 48 | 25X5 | 1750 | 3.4 |
|  | 630 | **BR0630** | 1 | 630 | 32 | 68 | 30X10 | 1750 | 4.4 |
|  | 400 | **BR4005** | 1 | 400 | 35 | 74 | 32X5 | 1750 | 2.1 |
|  | **630** | **BR6305** | **1** | **630** | **50** | **105** | **50X5** | **1750** | **3.4** |
|  | **800** | **BR8005** | **1** | **800** | **50** | **105** | **63X5** | **1750** | **4.4** |
|  | **1250** | **BR1250** | **1** | **1250** | **50** | **105** | **100X5** | **1750** | **7.25** |
|  | **1600** | **BR1600** | **1** | **1600** | **100** | **220** | **100X10** | **1750** | **14.5** |

# In-depth technical information

## Busbars with shaped section and flat busbars

### Busbar holders for busbars with shaped section

| Tipo | | Icc (kA) | Busbar holder | In (A) | Busbars with shaped section 400A | 800A | 1250A | 1600A |
|---|---|---|---|---|---|---|---|---|
|  | Linear | 35 | **PB0803** | L1-L2-L3 | 3xBA0400 | 3xBA0800 | - | - |
| | | | | N 100% | 1xBA0400 | 1xBA0800 | - | - |
| | | | | N ridotto | - | 1xBA0400 | - | - |
| 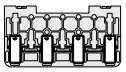 | Linear | 65 | **PB1603**[1] | L1-L2-L3 | - | - | 3xBA1250 | 3xBA1600 |
| | | | | N 100% | - | - | 1xBA1250 | 1xBA1600 |
| | | | | N ridotto | - | - | - | 1xBA1250 |

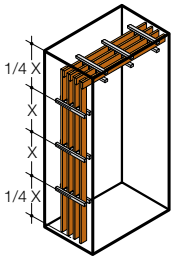


The distance between the first busbar holder and the end of the busbar must not exceed $^1/_4$ of X.

| Busbar | Capacity (A) | Busbar holder | No. and distance of the busbar holder according to the max $I_{cc}$ 25 kA | X max (mm) | 35 kA | X max (mm) | 50 kA | X max (mm) | 65 kA | X max (mm) |
|---|---|---|---|---|---|---|---|---|---|---|
| **BA0400** | 400 | **PB0803** | 4 | 550 | 5 | 425 | - | - | - | - |
| | | **PB1603** [1] | 4 | 550 | 4 | 550 | - | - | - | - |
| **BA0800** | 800 | **PB0803** | 4 | 550 | 5 | 425 | - | - | - | - |
| | | **PB1603** [1] | 4 | 550 | 4 | 550 | - | - | - | - |
| **BA1250** | 1250 | **PB1603** | 4 | 550 | 4 | 550 | 6 | 350 | 9 | 225 |
| **BA1600** | 1600 | **PB1603** | 4 | 550 | 4 | 550 | 6 | 350 | 9 | 225 |

X max = maximum distance not to be exceeded between two consecutive busbar holders.

[1] It is possible to mount the 400/800A busbars with the special adapter AD1066.

### Busbar holder for flat busbars

| Tipo | | Icc (kA) | Busbar holder | In (A) | Flat busbars 250A | 400A | 630A | 800A | 1250A | 1600A |
|---|---|---|---|---|---|---|---|---|---|---|
|  | Linear | 32 | **BP0630** | L1-L2-L3 | 3xBR0250 | 3xBR0400 | 3xBR0630 | - | - | - |
| | | | | N 100% | 1xBR0250 | 1xBR0400 | 1xBR0630 | - | - | - |
| 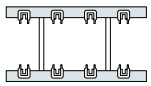 | Linear | 50 | **BP1250** | L1-L2-L3 | - | 3xBR4005 | 3xBR6305 | 3xBR8005 | 3xBR1250 | - |
| | | | | N 100% | - | 1xBR4005 | 1xBR6305 | 1xBR8005 | 1xBR1250 | - |
| 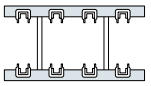 | Linear | 75 | **BP1600** | L1-L2-L3 | - | - | - | - | - | 3xBR1600 |
| | | | | N 100% | - | - | - | - | - | 1xBR1600 |

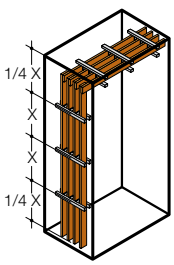


The distance between the first busbar holder and the end of the busbar must not exceed $^1/_4$ of X.

| Busbar | Capacity (A) | Busbar holder | No. and distance of the busbar holder according to the max $I_{cc}$ 16 kA | X max (mm) | 20 kA | X max (mm) | 23 kA | X max (mm) | 32 kA | X max (mm) |
|---|---|---|---|---|---|---|---|---|---|---|
| **BR0250** | 250 | **BP0630** | 4 | 500 | 6 | 350 | 10 | 200 | - | - |
| **BR0400** | **400** | | 4 | 500 | 6 | 350 | 10 | 200 | - | - |
| **BR0630** | 630 | | - | - | 4 | 600 | 4 | 600 | 9 | 210 |

| Busbar | Capacity (A) | Busbar holder | 25 kA | X max (mm) | 35 kA | X max (mm) | 50 kA | X max (mm) | 65 kA | X max (mm) |
|---|---|---|---|---|---|---|---|---|---|---|
| **BR4005** | **400** | **BP1250** | 7 | 300 | 9 | 225 | - | - | - | - |
| **BR6305** | **630** | | 6 | 375 | 7 | 275 | 9 | 225 | - | - |
| **BR8005** | **800** | | 5 | 425 | 7 | 300 | 9 | 225 | - | - |
| **BR1250** | **1250** | | 4 | 500 | 6 | 375 | 8 | 250 | - | - |
| **BR1250** | 1600 | **BP1600** | 3 | 1000 | 3 | 1000 | 4 | 600 | 6 | 375 |

X max = maximum distance not to be exceeded between two consecutive busbar holders.

# In-depth technical information

## Busbars with shaped section and flat busbars

### Components

—
01 Direct branch by means of cable terminal for cross-section of cable up to 50mm².

—
02 M8 self-locking hammer screw for fixing between conductors in any position along the busbar, guarantees a large contact surface.

—
03 The 25mm drilling pitch allows branches between flat busbars at any point.

—
04 Branch between 1600A flat busbars and 1250/1600A busbars with shaped section.

—
01

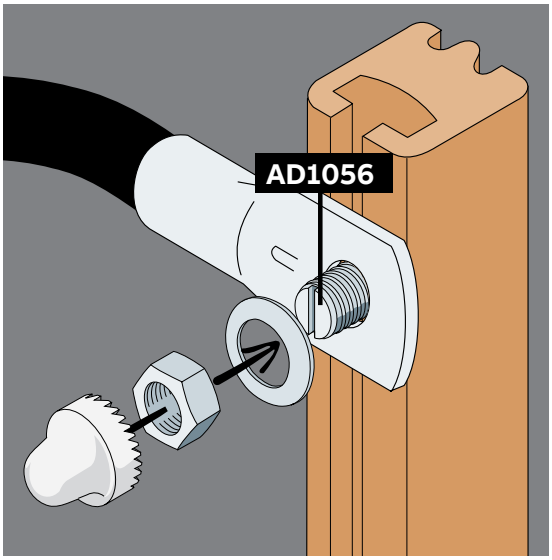


—
02

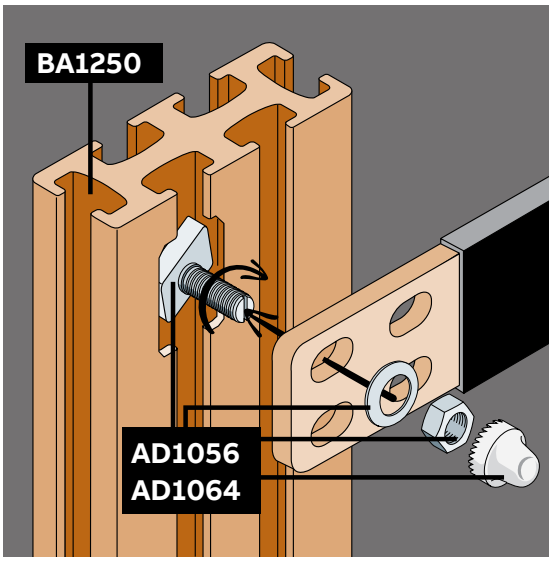


—
03

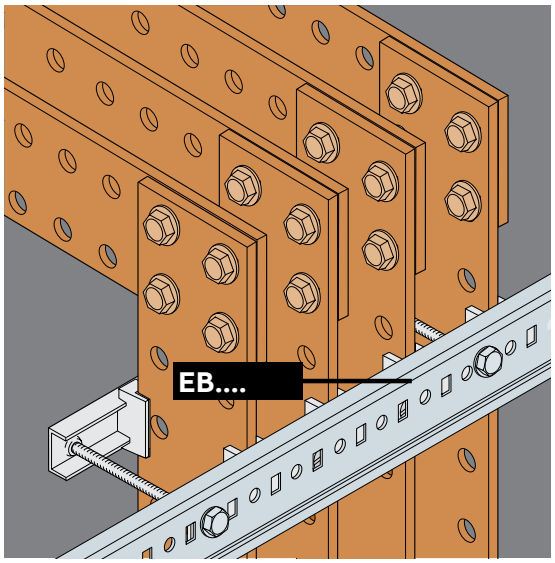


—
04

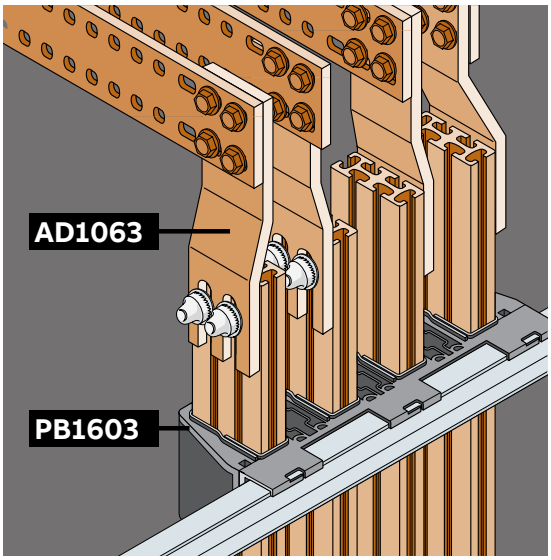

# In-depth technical information

## Busbars with shaped section and flat busbars

### Modular dividers

| Four-poles | Code | | AD1004 |
|---|---|---|---|
| 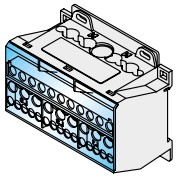 | Mark | | CE |
| | In | (A) | 125 |
| | Icw | (kA) | 10 |
| | Ipk | (kA) | 24 |
| | Version | poles | 4.2 |
| | Installation | | DIN35/plate |
| | Power supplye Ø cable (mm²) | min. | 6 |
| | | max | 35 |
| | No.outgoing feeder (mm²) Ø cable | | With cable lugs |
| | | | 5L, 4Nx1,5-6mm² |
| | | | 2L, 6Nx4-10mm² |
| | | | 1L, 1Nx6-25mm² |
| | | | Without cable lugs |
| | | | 5L, 4Nx1,5-6mm² |
| | | | 2L, 6Nx4-10mm² |
| | | | 1L, 1Nx6-35mm² |
| | Dimensions HxWxD | (mm) | 74.5x98x45 |
| | No. DIN modules | | 5,5 |
| | Rated service voltage Ue | (V) | 1000 Vac/1500 Vdc |
| | Degree of protection | IP | 20 |

| Four-poles | Code | | AD1028 |
|---|---|---|---|
| 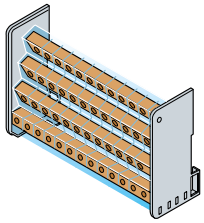 | Mark | | CE |
| | In | (A) | 125 |
| | Icw | (kA) | 4.2 |
| | Ipk | (kA) | 25 |
| | Version | poles | 4 |
| | Installation | | DIN35/plate |
| | Power supplye Ø cable (mm²) | min. | 6 |
| | | max | 25 with cable terminal |
| | No.outgoing feeder (mm²) Ø cable | | Rigid cable |
| | | | 7x1,5-10mm² |
| | | | 2x6-25mm² |
| | | | With cable lugs |
| | | | 7x1,5-10mm² |
| | | | 2x6-16mm² |
| | | | Without cable lugs |
| | | | 7x2,5-16mm² |
| | | | 2x6-35mm² |
| | Dimensions HxWxD | (mm) | 93x89x48 |
| | No. DIN modules | | 5 |
| | Rated service voltage Ue | (V) | 440 |
| | Degree of protection | IP | 20 |

| Four-poles | Code | | AD1029 |
|---|---|---|---|
| 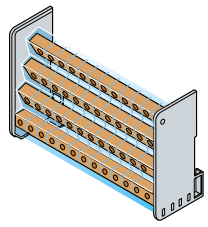 | Mark | | CE |
| | In | (A) | 125 |
| | Icw | (kA) | 4.2 |
| | Ipk | (kA) | 25 |
| | Version | poles | 4 |
| | Installation | | DIN35/plate |
| | Power supplye Ø cable (mm²) | min. | 6 |
| | | max | 25 with cable terminal |
| | No.outgoing feeder (mm²) Ø cable | | Rigid cable |
| | | | 9x1,5-10mm² |
| | | | 2x1,5-16mm² |
| | | | 2x6-25mm² |
| | | | With cable lugs |
| | | | 2x1,5-6mm² |
| | | | 9x1,5-10mm² |
| | | | 2x6-16mm² |
| | | | Without cable lugs |
| | | | 11x2,5-16mm² |
| | | | 2x6-35mm² |
| | Dimensions HxWxD | (mm) | 96x126x48 |
| | No. DIN modules | | 7 |
| | Rated service voltage Ue | (V) | 440 |
| | Degree of protection | IP | 20 |

| Four-poles | Code | | AD1027 |
|---|---|---|---|
| 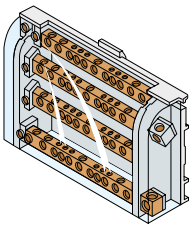 | Mark | | CE |
| | In | (A) | AD1027 |
| | Icw | (kA) | 160 |
| | Ipk | (kA) | 6.2 |
| | Version | poles | 20 |
| | Installation | | 4 |
| | Power supplye Ø cable (mm²) | min. | DIN35 |
| | | max | 10 |
| | No.outgoing feeder (mm²) Ø cable | | 50 |
| | | | Rigid cable |
| | | | 8x2,25-25mm² |
| | | | 1x10-50mm² |
| | | | 3x16-35mm² |
| | | | With cable lugs |
| | | | 8x2,5-16mm² |
| | | | 3x6-25mm² |
| | | | 1x10-35mm² |
| | | | Without cable lugs |
| | | | 8x6-16mm² |
| | | | 3x6-25mm² |
| | | | 1x10-35mm² |
| | Dimensions HxWxD | (mm) | 90x160.5x50 |
| | No. DIN modules | | 9 |
| | Rated service voltage Ue | (V) | 440 |
| | Degree of protection | IP | 20 |

# In-depth technical information

## Busbars with shaped section and flat busbars

### Linear busbar holder PB1603

**IS2**

Busbars in the internal cable container and DIN rail apparatus holder fixed on the front.

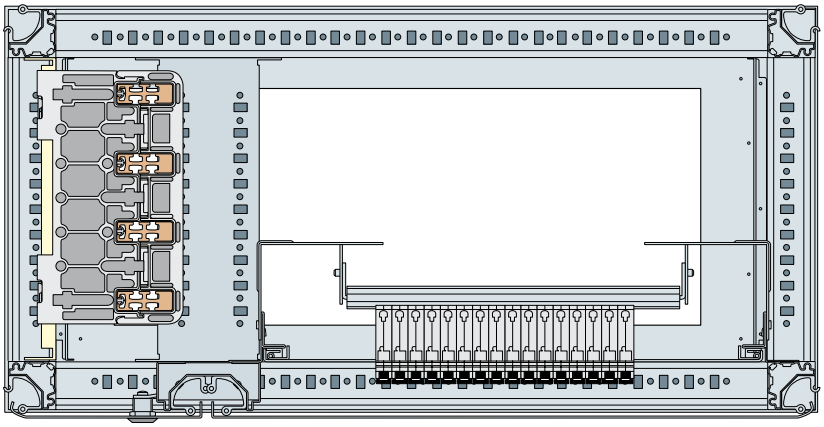

### Linear busbar holder PB1603

**IS2**

Busbars in the additional structure W=400mm and DIN rail apparatus holder fixed on the back plate.

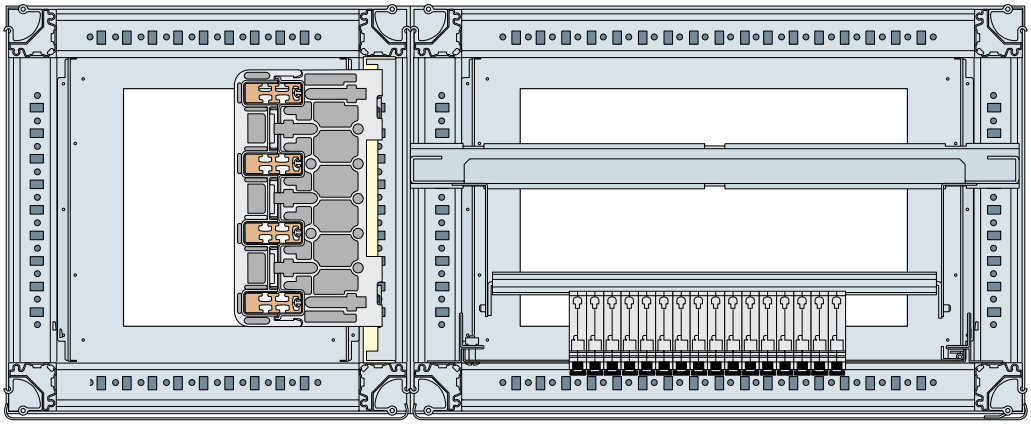

### Linear busbar holder PB1603

**IS2**

Busbars in the additional structure W=400mm and kit for moulded-case apparatus fixed on the back plate.

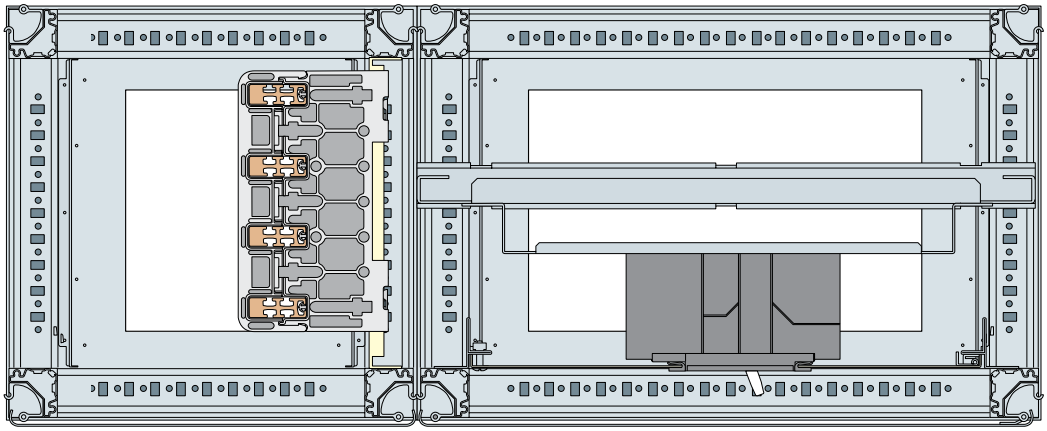

# In-depth technical information
## Ventilation and air conditioning



**General characteristics and applications**
CHeat, dust and humidity are the major causes of incorrect operation of controls and settings in electrical equipment, especially considering the high sensitivity of electronic components which have to record the input of signals and working of logical parts.
There are several methods and products for cooling the electrical enclosures:

- air condensed air conditioners
- water condensed air conditioners
- air-air heat exchangers
- gas pipe heat exchangers
- air-water heat exchangers
- fans with or without filters.

Each of these systems is able to cool in a different way and with different application limits, and consequently with advantages and disadvantages depending on the type of application they are destined for.
To maintain the ideal climatic conditions inside a enclosure, ABB has the following solutions:

**Ventilation**
Natural ventilation together with forced ventilation is used when the temperature inside the electrical enclosure exceeds the ambient temperature. Fans are economical and efficient, making it possible to keep degrees of protection up to IP54, in the case of use of a filter, or IP21 without the latter.
The only precaution needed is periodic cleaning of the filtering elements.

**Air conditioners**
These systems are able to keep temperatures inside the electrical enclosure lower than the ambient, ensuring a high degree of protection against dust and water (IP54). According to the position of the air conditioner (on the door, wall, roof or side of the enclosure) and to the type of installation (outdoor, indoor, or semi-embedded), ABB proposes a wide range of types based on the refrigeration yield required.

**Air-air heat exchangers**
These systems are suitable when temperatures inside the electrical enclosure can be kept higher than ambient temperature, guaranteeing an IP54 degree of protection. The yield of heat e changers is indicated in W/K (Watt/Kelvin) – a value which expresses the capacity of removing heat for each centigrade degree of difference between the ambient temperature and the temperature inside the electrical enclosure. In some cases heat exchangers can be more expensive than air conditioners. Under the same conditions air conditioners obtain the same results with lower costs and overall dimensions.

**Heaters for enclosures**
Formation of condensation inside the electrical enclosures is the cause of oxidation of the apparatus contained in it and the consequent loss of insulation and dielectric strength.
By keeping the optimal temperature for operation of the components, anti-condensation heaters eliminate the risk of oxidation.ossidazione.

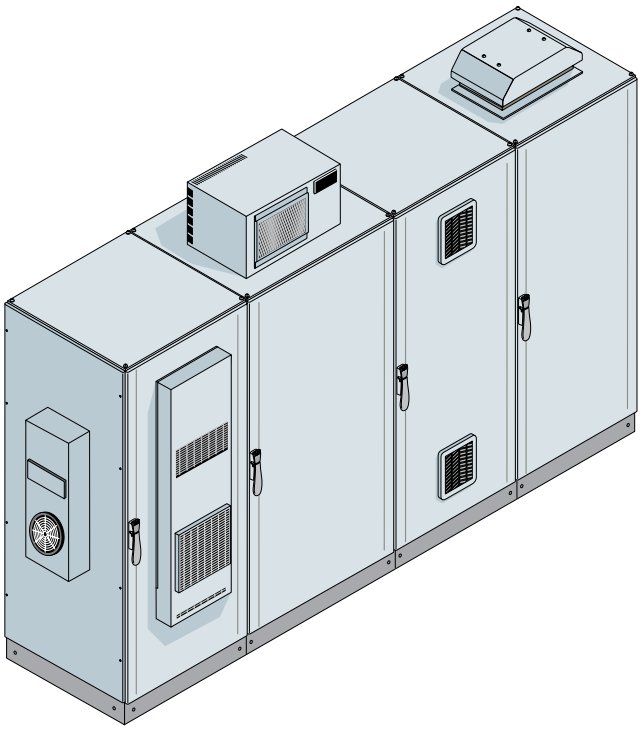

# In-depth technical information
## Ventilation and air conditioning



— 01 Natural aeration with gratings (IP54 with filter or IP21 without filter).

— 02 Natural aeration with hood (IP43) and grating.

— 03 Natural aeration with roof lifting kit (IP20) and grating.

### Operation and selection of components

**Natural ventilation**
Enclosure cooling can be obtained by means of simple natural convection.

In fact, it is sufficient to the install aeration kit (in the different ways shown in the diagram) to obtain a fair improvement in enclosure cooling.

The following table indicatively provides the increase in percentage of the thermal power value dissipated by the enclosure in relation to the aeration kits used.
The result is obtained by multiplying the dissipation power value of the selected cabinet (page 6-13) by the coefficient indicated in the table corresponding with the size of the aeration grating selected.

**Multiplication coefficient of the dissipated power from the enclosure according to the dimensions of the aeration gratings.**

| | | | Dimensions of the aeration grating WxW (mm) | | | |
|---|---|---|---|---|---|---|
| | | | 105x105 | 150x150 | 204x204 | 250x250 |
| H (mm) | W (mm) | D (mm) | Multiplication coefficient | | | |
| 1800<br>2000 | 600-800-1000-1200 | 400-500-600-800-1000 | 1,2 | 1,5 | 2,1 | 3 |
| 2200 | 1600 | 400-500-600-800 | - | 1,3 | 1,7 | 2,2 |

—
01



—
02



—
03

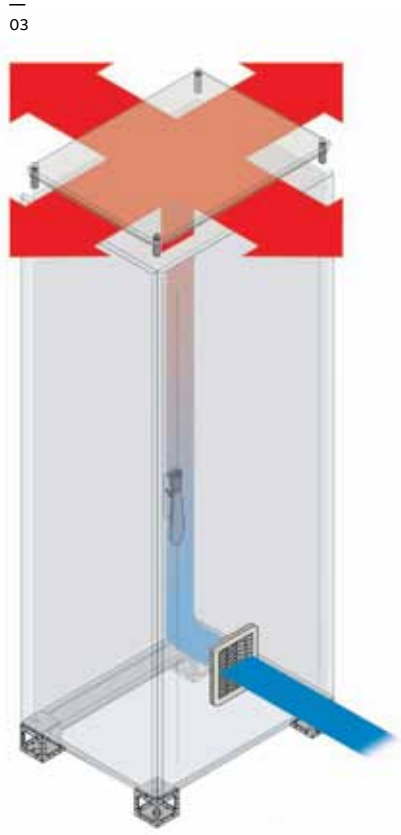

# In-depth technical information

## Ventilation and air conditioning

**Forced ventilation**

Operation of the ventilation kit is simple: the ambient air - in this case colder than the air inside the enclosure - is sucked up from below, filtered of impurities and conveyed inside. It grazes the apparatus cooling it, whilst the warmer air flows towards the upper part and exits through the special air passage.

In this way a slight overpressure is created inside, which prevents dust from entering.

Even when the fan is not working, there is no formation of condensation and humidity, since the entry and exit fans are a guarantee of quick heat exchange.

For correct operation, it is good practice to periodically clean the filtering part by shaking, compressed air or washing in water, or to replace it with a new cloth.

**How to calculate the capacities of the fans**

Once the value of the power to be dissipated has been calculated, given by the sum of the dissipating power of each device, and by the conductors (taking into account the contemporaneity coefficient as well) and once the maximum temperature inside the enclosure has been defined – compatibly with correct operation of the apparatus it contains – the following formula must be applied:

$$Q = \frac{P}{\Delta T} \cdot f$$

where:

Q = fan capacity (m3/h)
P = power to be dissipated (W)
ΔT = difference in the ambient temperature Te and the temperature inside the enclosure Ti
f = coefficient of thermal exchange

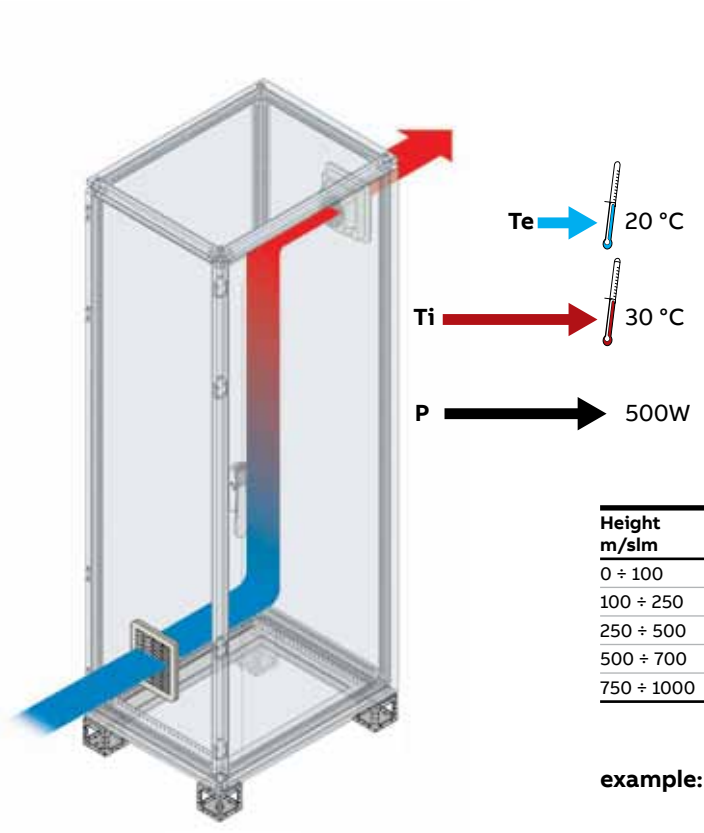


| Height m/slm | f m³ °C/Wh |
|---|---|
| 0 ÷ 100 | 3.1 |
| 100 ÷ 250 | 3.2 |
| 250 ÷ 500 | 3.3 |
| 500 ÷ 700 | 3.4 |
| 750 ÷ 1000 | 3.5 |

**example:** $Q = \frac{500}{10} \cdot 3.2 = \mathbf{160}\ \frac{m^3}{h}$

# In-depth technical information

## Ventilation and air conditioning

**How to install the ventilation kit**
Use of a ventilator as a means for extracting heat from a cabinet is recommended when an internal temperature higher than the ambient temperature is acceptable.
In both cases (A and B), to improve the thermal performances of the system, it is advisable to use the filter without a fan one size larger than the one with a fan.
The best thermal situations are obtained by istalling the aeration kit in the following ways:

**Ventilation kit at the top and filter at the bottom on the opposite wall - Fig.1**
The fan sucks in hot air from the top area of the cabinet towards the outside, whilst fresh air enters through the filter placed at the bottom. This configuration is recommended for cabinets fitted with gaskets as it is the condition which offers better temperature distribution.

**Ventilation kit at the bottom and filter at the top on the opposite wall - Fig.2**
The fan sucks in fresh air from the outside towards the bottom area inside the cabinet, whilst hot air exits through the filter placed at the top. This solution is particularly recommended when you want to avoid entry of dust as far as possible, using the delivery fan, so as to put the cabinet under pressure and prevent entry of dust through the gaps between the panels. Entry of dust is prevented by the fan filter.

**Hood with fan mounted on the cabinet roof and filter placed at the bottom on a wall - Fig.3**
In this configuration, the air flow moves from the bottom towards the top: fresh air enters the cabinet through the filter placed at the bottom and hot air exits to the room through the hood. When the hood is used, what has already been said in the previous cases is valid with regard to selecting to mount the fan on delivery or on suction.

**Air flow**

Fig. 1

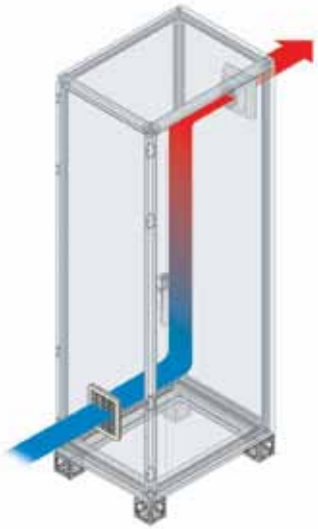

Fig. 2

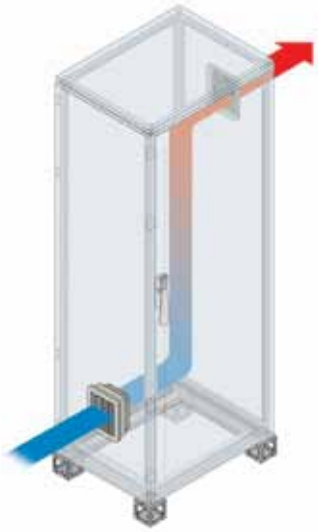

Fig. 3



# In-depth technical information

## Ventilation and air conditioning

**Air conditioners**

Air conditioners allow the temperature inside the enclosure to be kept within an established range and are available in the versions for mounting on a wall or on the enclosure roof. There are also four super thin versions available to be mounted on the wall with a thickness of 105mm.
To size the air conditioner, the following data are required:

- **power to be dissipated**
  (this depends on the type and number of pieces of apparatus and conductors contained in the enclosure);

- **maximum internal temperature;**

- **ambient temperature**
  (referring to the place where the enclosure is installed);

- **equivalent cooling surface**
  (sum of the external surfaces able to transmit heat from/towards the outside). To calculate this, the calculation method of the IEC 60890 Standard can be used;

| Disposition of the cabinet | Calculating the enclosure surface S (mm²) | Dimensions (m) |
|---|---|---|
| Detached, exposed on all sides | Ae = 1,8 x H x (L+P) + 1,4 x L x P | L = width<br>H = height<br>P = depth |
| For closed to a wall structures | Ae = 1,4 x L x (H+P) + 1,8 x P x H | |
| Left or right exposed structure | Ae = 1,4 x P x (H+L) + 1,8 x L x H | |
| Left or right closed to a wall structure | Ae = 1,4 x H x (P+L) + 1,4 x L x P | |
| Central exposed structure | Ae = 1,8 x L x H + 1,4 x L x P + P x H | |
| Central closed to a wall structure | Ae = 1,4 x L x (H+P) + P x H | |
| Central closed to a wall structure, with covered roof | Ae = 1,4 x L x H + 0,7 x L x P + P x H | |

- **thermal power**
  absorbed or dissipated by the surface of the cabinet, according to the difference in the existing internal/external temperature (if the external temperature is lower than the internal one, the heat flows towards the outside and vice versa);

- **nominal characteristics**
  of the air conditioner and refrigerating yield: in our case, the ABB air conditioners work with outside temperatures between 20 and 55 °C, keeping temperature values between 25 and 45 °C inside the enclosure. The nominal
- reference condition is 35 °C inside and outside the enclosure: as this condition varies, the yielded refrigerating capacity of the air conditioner undergoes modifications which must be taken into account to size the air conditioner correctly (refer to the “Refrigerating capacity correction factor” table given here).vice versa);

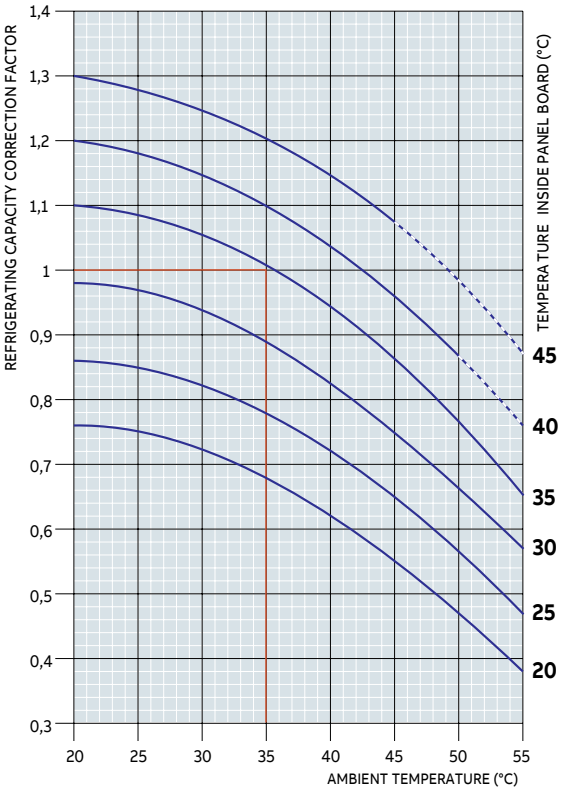

# In-depth technical information
## Ventilation and air conditioning

**Example of selection of an air conditioner**
Data:
Internal power to be dissipated 400 W
Internal temperature 35°C Foreseen ambient temperature 40°C Equivalent cooling surface (Ae) (e.g. ES2086K 2000x800x600mm) 5,7 $m^2$.

Note: in this case the cooling surface was considered in the hypothesis of installation exposed on all sides. For other types of installation, theeffective cooling surface must be calculated using the method illustrated in the IEC 60890 Standard.

| Disposition of the cabinet | Calculating the enclosure surface S ($mm^2$) | Dimensions (m) |
|---|---|---|
| Detached, exposed on all sides | Ae = 1,8 x H x (L+P) + 1,4 x L x P | L = width<br>H = height<br>P = depth |
| For closed to a wall structures | Ae = 1,4 x L x (H+P) + 1,8 x P x H | |
| Left or right exposed structure | Ae = 1,4 x P x (H+L) + 1,8 x L x H | |
| Left or right closed to a wall structure | Ae = 1,4 x H x (P+L) + 1,4 x L x P | |
| Central exposed structure | Ae = 1,8 x L x H + 1,4 x L x P + P x H | |
| Central closed to a wall structure | Ae = 1,4 x L x (H+P) + P x H | |
| Central closed to a wall structure, with covered roof | Ae = 1,4 x L x H + 0,7 x L x P + P x H | |



Since the internal temperature is lower than the external temperature, the heat is transmitted from the outside towards the inside of the enclosure. To size the air conditioner, the total power to be dissipated derives from the sum of two components: power generated by the apparatus, including that of the copper conductors, (400 W in our example) and the power transmitted by the ambient towards the inside of the enclosure through the external sheet steel surfaces, given by the following formula:

$P = K \cdot Ae \cdot \Delta T = 5,5 \cdot 5,7 \cdot 5 = 156,75W$

The total power to be dissipated is therefore:

$P_{tot} = 400 + 156,75 = 556,75W$

At this point the total power value obtained in this way could be used to select the air conditioner. However, correct sizing must also take into consideration the environmental effects where the conditioner is going to operate. In our example (Tint= 35 °C and Text=40 °C) the correction coefficient of the refrigerating capacity (0.94) is taken from table 1.
The power to be used for sizing the air conditioner is therefore:

$Presa = P_{tot} : 0,94 = 556,75 : 0,94 = 592,3 W$

It should be noted how, in the case of an internal temperature higher than the external temperature, to calculate the total power to be dissipated, the heat naturally transmitted to the outside by the walls of the cabinet must be deducted from the power value deriving from the apparatus contained in the enclosure, due to the condition of the internal temperature being higher than the external temperature.

# In-depth technical information

## Ventilation and air conditioning

**Air-air heat exchangers**
Heat exchangers cool the hot air taken up inside the cabinet causing thermal exchange with the colder air coming from the outside, but keeping the two air flows isolated from each other.
For this reason, heat exchangers can only be used when the condition Tint > Text exists and their use is recommended in the case of enclosure installation in industrial environments with presence of dust.

In fact, heat exchangers allow the air inside the enclosure to be cooled without mixing it with the air coming from the outside, keeping an IP54 degree of protection and therefore preventing penetration of impurities into the electrical enclosure. The $T_{int} > T_{ext}$ condition still being valid, the power generated by the apparatus installed inside the enclosure is dissipated by the heat exchanger and by the surface of the cabinet.

The heat exchanger is sized by means of its specific power W/K Watt/Kelvin) which expresses the power which can be exchanged for every degree of difference between the external and internal temperature.

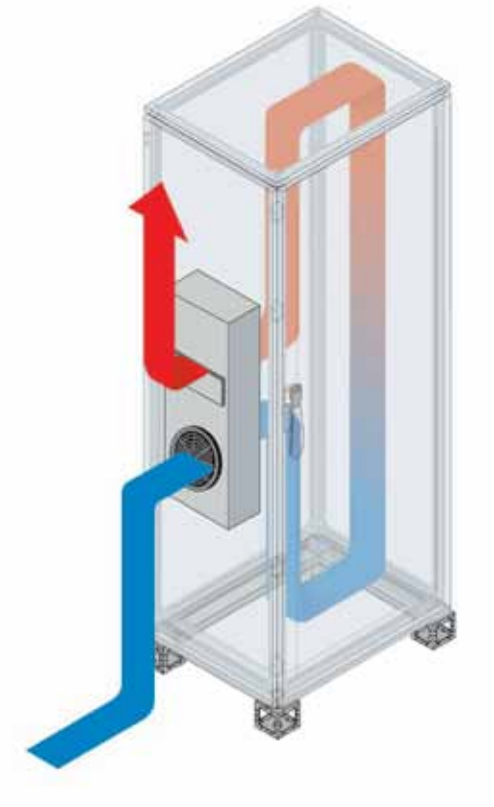

**Example of selection of a heat exchanger**
Data:
Internal power to be dissipated 640 W
Internal temperature 35 °C
Foreseen ambient temperature 25 °C
Equivalent cooling surface (Ae)
(e.g. ES2086K 2000x800x600mm) 5.7 $m^2$
Note: in this case the cooling surface was considered in the hypothesis of installation exposed on all sides. For other types of installation, the effective cooling surface must be calculated using the method illustrated in the IEC 60890 Standard.
Since the internal temperature is higher than the external temperature, the heat is transmitted from the inside towards

| Disposition of the cabinet | Calculating the enclosure surface S ($mm^2$) | Dimensions (m) |
|---|---|---|
| Detached, exposed on all sides | Ae = 1,8 x H x (L+P) + 1,4 x L x P | L = width<br>H = height<br>P = depth |
| For closed to a wall structures | Ae = 1,4 x L x (H+P) + 1,8 x P x H | |
| Left or right exposed structure | Ae = 1,4 x P x (H+L) + 1,8 x L x H | |
| Left or right closed to a wall structure | Ae = 1,4 x H x (P+L) + 1,4 x L x P | |
| Central exposed structure | Ae = 1,8 x L x H + 1,4 x L x P + P x H | |
| Central closed to a wall structure | Ae = 1,4 x L x (H+P) + P x H | |
| Central closed to a wall structure, with covered roof | Ae = 1,4 x L x H + 0,7 x L x P + P x H | |

the outside of the enclosure and therefore naturally contributes towards a part of the necessary dissipation. The power transmitted to the ambient through the external sheet surfaces of the enclosure is calculated with the following formula:
$P = K \cdot Ae \cdot \Delta T = 5,5 \cdot 5,7 \cdot 10 = 313,5W$
The total power to be dissipated is therefore:
$P_{to}t = 640 - 313,5 = 326,5W$

The heat exchanger must dissipate:
$P_{spec} = P_{tot} : \Delta T = 326,5 : 10 = 32,65W/K$
In this case, the heat exchanger suitable for the purpose is the one with 35W/K specific power (code VS 4233).

Formula for calculating the power transmitted towards the ambient:

$P = K \cdot Ae \cdot \Delta T$

where:
P = power transmitted from the ambient (W)
K = coefficient of thermal exchange for painted sheet
K = 5,5 W/m2 . K
Ae = free surface of the cabinet (m2)
ΔT = (Ti - Te)
$T_i$ = internal temperature
$T_e$ = external temperature

# In-depth technical information
## Ventilation and air conditioning

**Heater for enclosures**
Heater prevent condensation of the atmospheric humidity inside the electrical enclosure – a phenomenon which can cause slow but progressive alteration of the of the surface of the materials, jeopardising the insulation.
The temperature that can create condensation may depends on different factors, including atmospheric pressure and air humidity.
Generally, if the temperature inside the switchgear is kept over the 15°C limit, the condensation risk is null. In tropical countries, instead, the limit can be risen up to 30-35°C.
The anti- condensation heaters ABB are made of a PTC heating element positioned in an aluminum alloy sink. The use of the PTC heating element guarantees an excellent heater thermal stability and allows the use of it in a wide break of supply voltage (between 110 and 240 V).
The combination of the heater with EN0102K thermostat with NC contact (set at 20°C) is suggested in order to avoid energy waste.
Furthermore, it's suggested to position the heaters in the bottom part of the cabinet, keeping the distances advised in the section 8-48, to help the air convection inside the switchgear.

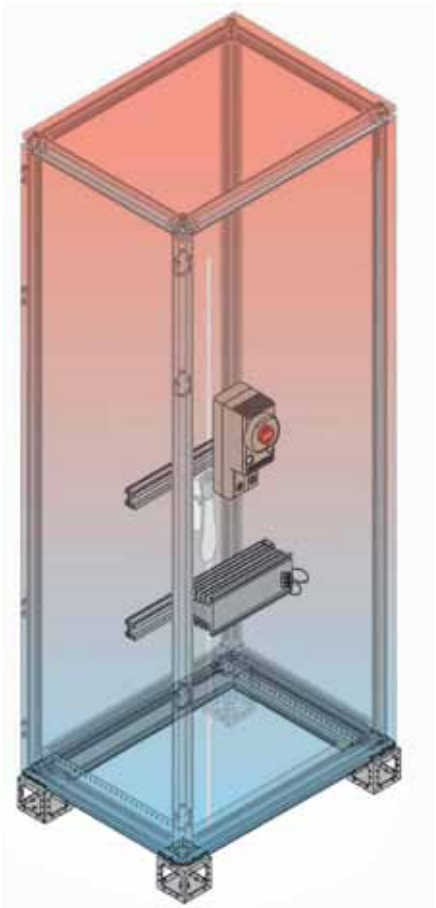

**Thermostats for regulating the temperature**
The thermostat is used to control operation of the fans. It has a temperature adjustment range from 10 ÷ 60 °C, with intervention sensitivity of about 1 °C and can be snap-on mounted on DIN EN 50022 rails.
Inside the regulation knob of the thermostat there is a manual device which limits the setting scale (min-max) of the temperature.
For correct installation, mount the apparatus so that the ventilation passes from the bottom to the top, but never sideways.

Furthermore, avoid the thermostat being close to direct heat sources and draughts of air.
Conforming to the IEC 60730-1, IEC 60730-2-9 Standards and UL approved, they have IP20 degree of protection. Grey RAL 7035, capacity of the 10 A contact and electrical life of 100000 cycles with resistive load.
The version with NO (normally open) contact allows closure of a circuit activating ventilation, air conditioning or alarms.
The version with NC (normally closed) contact allows opening of a circuit, disconnecting any anti-condensation heaters.

# In-depth technical information

## Ventilation and air conditioning

Air conditioner for mounting on wall or on door

| Model | | | VZ1550K | | VZ1850K | | VZ1400K | | VZ2000K | |
|---|---|---|---|---|---|---|---|---|---|---|
| Standard electrical power supply | V~(single-phase) | | 230 | | 230 | | 230 | | 230 | |
| Frequency | | Hz | 50 | 60 | 50 | 60 | 50 | 60 | 50 | 60 |
| Refrigerating yield | | W | 605 | 670 | 810 | 900 | 1300 | 1480 | 1926 | 2200 |
| Total power consumption | | W | 330 | 360 | 400 | 450 | 650 | 720 | 800 | 920 |
| Absorbed current | on inrush | A | 8 | | 12,5 | | 21 | | 22 | |
| | operating | A | 2 | | 2,5 | | 4 | | 4,5 | |
| Current protection | | A | 4,9 | | 5,9 | | 8 | | 10 | |
| Air evaporator capacity | | $m^3/h$ | 380 | | 350 | | 350 | | 500 | |
| Air condenser capacity | | $m^3/h$ | 400 | | 400 | | 600 | | 950 | |
| Degree of protection on enclosure side | | IP | 54 | | 54 | | 54 | | 54 | |
| Refrigerating gas (standard) | | | R 134 A | | R 134 A | | R 134 A | | R 134 A | |
| Permissible external temperature | | °C | 55 | | 55 | | 55 | | 55 | |
| Noise | | dB(A) | 64 | | 64 | | 66 | | 66 | |
| Dimensions HxWxD | | mm | 1025x380x198 | | 1025x380x198 | | 1025x380x198 | | 1100x380x230 | |
| Approximate weight | | kg | 33 | | 33 | | 36 | | 42 | |
| Standard painting | | RAL | 7035 orange peel | | 7035 orange peel | | 7035 orange peel | | 7035 orange peel | |



**Basic cooling circuit diagram**

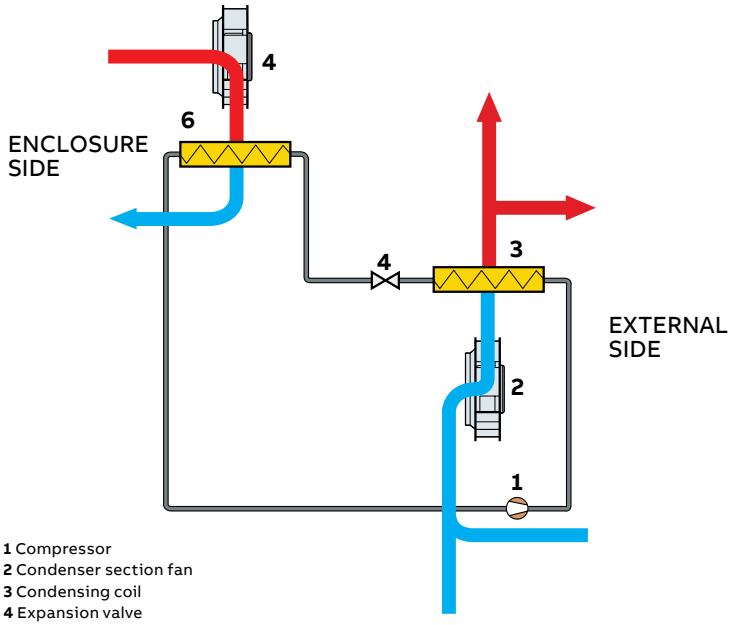


**1** Compressor
**2** Condenser section fan
**3** Condensing coil
**4** Expansion valve
**5** Treatment section fan
**6** Evaporating coil

# In-depth technical information

## Ventilation and air conditioning

Air conditioner for mounting on roof

CE

| Model | | | VZ8501K | | VZ1401K | |
|---|---|---|---|---|---|---|
| Standard electrical power supply | V~(single-phase) | | 230 | | 230 | |
| Frequency | | Hz | 50 | 60 | 50 | 60 |
| Refrigerating yield | | W | 810 | 900 | 1300 | 1480 |
| Total power consumption | | W | 400 | 450 | 650 | 720 |
| Absorbed current | on inrush | A | 12,5 | | 21 | |
| | operating | A | 2,5 | | 4 | |
| Current protection | | A | 5,9 | | 8 | |
| Air evaporator capacity | | m³/h | 350 | | 350 | |
| Air condenser capacity | | m³/h | 400 | | 600 | |
| Degree of protection on enclosure side | | IP | 54 | | 54 | |
| Refrigerating gas (standard) | | | R 134 A | | R 134 A | |
| Permissible external temperature | | °C | 55 | | 55 | |
| Noise | | dB(A) | 64 | | 66 | |
| Dimensions HxWxD | | mm | 350x600x400 | | 350x600x400 | |
| Approximate weight | | kg | 33 | | 34 | |
| Standard painting | | RAL | 7035 orange peel | | 7035 orange peel | |



**Basic cooling circuit diagram**

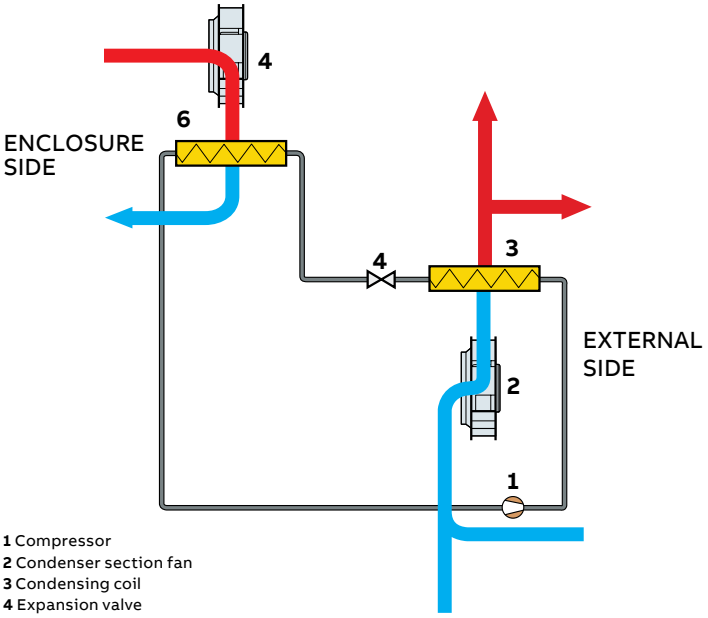


**1** Compressor
**2** Condenser section fan
**3** Condensing coil
**4** Expansion valve
**5** Treatment section fan
**6** Evaporating coil

# In-depth technical information

## Ventilation and air conditioning

Air conditioner for mounting on roof

CE

| Model | | VZ8501K | VZ1401K |
|---|---|---|---|
| Specific thermal yield | W/K | 35 | 85 |
| Total power consumption | W | 117/150 | 170/180 |
| Power supply standard | V~(monofase) | 230 | 230 |
| Frequency | Hz | 50/60 | 50/60 |
| Absorbed current | A | 0,52/0,68 | 0,77/0,80 |
| Internal circuit fan air capacity | $m^3/h$ | 200 | 200 |
| External circuit fan air capacity | $m^3/h$ | 200 | 300 |
| Degree of protection on enclosure side | | IP 54 | IP 54 |
| Permissible external temperature | °C | 55 | 55 |
| Dimensions HxWxD | mm | 735x370x155 | 845x475x195 |
| Approximate weight | kg | 15 | 21 |
| Standard painting | RAL | 7035 orange peel | 7035 orange peel |



**Basic cooling circuit diagram**

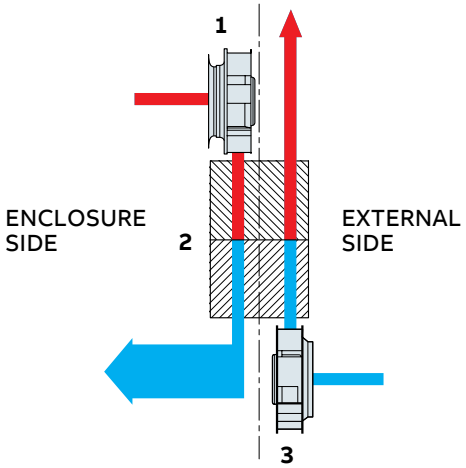

# In-depth technical information

## Ventilation and air conditioning

Air conditioner for mounting on roof

| Characteristic | U.m. | EN1105K | EN2105K | EN1150K | EN2150K | EN1204K |
|---|---|---|---|---|---|---|
| Capacity air | $m^3/h$ | 23/30 | 23/30 | 57/61 | 57/61 | 120/135 |
| Standard power supply (single-phase) | V a.c. | 230 | 115 | 230 | 115 | 230 |
| Frequency | Hz | 50/60 | 50/60 | 50/60 | 50/60 | 50/60 |
| Total power consumption | W | 10/8 | 9/7 | 20/19 | 20/19 | 17/15 |
| Rated current | A | 0.07/0.055 | 0.115/0.092 | 0.125/0.110 | 0.210/0.180 | 0.100/0.090 |
| Rotation speed | rpm | 2700 | 2700 | 2650 | 2650 | 2700 |
| Noise | dB(A) | 33/38 | 33/38 | 46/49 | 46/49 | 46/50 |
| Operating temperature | °C | -10+50 | -10+50 | -10+50 | -10+50 | -10+50 |
| Electrical life | h | 45.000 | 45.000 | 45.000 | 45.000 | 45.000 |
| Degree of protection | IP | 54 | 54 | 54 | 54 | 54 |
| Class | | I | I | I | I | I |
| Weight | Kg | 0,5 | 0,5 | 0,8 | 0,8 | 1,1 |
| Protection | | Impedance | Impedance | Impedance | Impedance | Impedance |
| Electric connection | | Wires | Wires | 2-pole term. | 2-pole term. | 3-pole term. |
| Mounting | | No screws | No screws | No screws | No screws | No screws |
| Flow direction | | Reversible | Reversible | Reversible | Reversible | Reversible |
| Bearing | | Bearings | Bearings | Bearings | Bearings | Bearings |
| Dimensions | mm (lxhxp) | 105x105x67 | 105x105x67 | 150x150x71 | 150x150x71 | 204x204x98 |
| Colour | RAL | 7035 | 7035 | 7035 | 7035 | 7035 |
| Approvals | | CE, UL | CE, UL | CE, UL | CE, UL | CE, UL |

| Characteristic | U.m. | EN2204K | EN1250K | EN2250K | EN2325K | EN3325K |
|---|---|---|---|---|---|---|
| Capacity air | $m^3/h$ | 120/135 | 240/270 | 240/270 | 520/580 | 520/580 |
| Standard power supply (single-phase) | V a.c. | 115 | 230 | 115 | 230 | 115 |
| Frequency | Hz | 50/60 | 50/60 | 50/60 | 50/60 | 50/60 |
| Total power consumption | W | 17/15 | 29/29 | 30/30 | 67/87 | 50/64 |
| Rated current | A | 0.200/0.160 | 0.132/0.130 | 0.265/0.274 | 0.300/0.382 | 0.540/0.650 |
| Rotation speed | giri/min | 2700 | 2800 | 2800 | 2770 | 3120 |
| Noise | dB(A) | 46/50 | 50/55 | 50/55 | 65/68 | 66/69 |
| Operating temperature | °C | -10+50 | -10+50 | -10+50 | -10+50 | -10+55 |
| Electrical life | h | 45.000 | 45.000 | 45.000 | 50.000 | 53.000 |
| Degree of protection | IP | 54 | 54 | 54 | 54 | 54 |
| Class | | I | I | I | I | I |
| Weight | Kg | 1,1 | 1,7 | 1,7 | 3,7 | 3,7 |
| Protection | | Impedance | Thermal | Thermal | Thermal | Thermal |
| Electric connection | | 3-pole term. | 3-pole term. | 3-pole term. | 3-pole term. | 3-pole term. |
| Mounting | | No screws | No screws | No screws | No screws | No screws |
| Flow direction | | Reversible | Reversible | Reversible | Reversible | Reversible |
| Bearing | | Bearings | Bearings | Bearings | Bearings | Bearings |
| Dimensions | mm (lxhxp) | 204x204x98 | 250x250x121 | 250x250x121 | 325x325x161 | 325x325x161 |
| Colour | RAL | 7035 | 7035 | 7035 | 7035 | 7035 |
| Approvals | | CE, UL | CE, UL | CE, UL | CE | CE |

In any forced ventilation kit, the fan wheel is balanced.
In the larger sizes ( cod. EN2325K and cod. EN3325K ) there is the balancing clip.
The balanced fan wheel ensures less noise and absorption.



# In-depth technical information

## Ventilation and air conditioning

### Ventilation towers

CE

| Characteristic | U.m. | EN0480K | EN0482K | EN0484K | EN0485K |
|---|---|---|---|---|---|
| Capacity air | $m^3/h$ | 550/590 | 550/590 | *420/490 | *420/490 |
| Standard power supply (single-phase) | V a.c. | 230 | 115 | 115 | 230 |
| Frequency | Hz | 50/60 | 50/60 | 50/60 | 50/60 |
| Total power consumption | W | 62/78 | 58/71 | 66/74 | 70/83 |
| Absorbed current | A | 0.290/0.340 | 0.530/0.620 | 0.620/0.640 | 0.309/0.360 |
| Rotation speed | rpm | 2535 | 2500 | 2470 | 2510 |
| Noise | dB(A) | 68/71 | 61 | 68/71 | 68/71 |
| Operating temperature | °C | -20+60 | -20+60 | -10+60 | -10+60 |
| Electrical life | h | 50.000 | 50.000 | 75.000 | 59.000 |
| Degree of protection | IP | 23 | 23 | 54 | 54 |
| Class | | I | I | I | I |
| Weight | Kg | 5,29 | 5,29 | 2,1 | 2,1 |
| Protection | | Thermal | Thermal | Thermal | Thermal |
| Electric connection | | Wires | Wires | 3-pole term. | 3-pole term. |
| Mounting | | Screws | Screws | Screws | Screws |
| Flow direction | | Inside-out | Inside-out | Inside-out | Inside-out |
| Bearing | | Bearings | Bearings | Bearings | Bearings |
| Dimensions | mm (lxhxp) | 375x295x119 | 375x295x119 | 324x324x94 | 324x324x94 |
| Colour | RAL | 7035 | 7035 | 7035 | 7035 |
| Approvals | | CE | CE | CE | CE |



*** Sample air flow $m^3/h$**

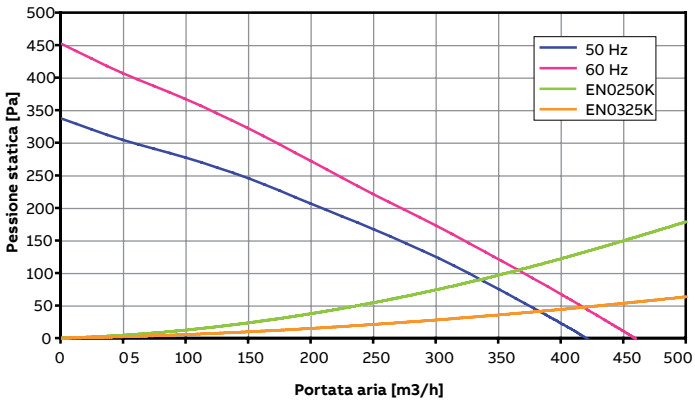

# In-depth technical information
## Ventilation and air conditioning

### Declaration of conformity

**Air conditioners and heat exchanges**
Under their full and exclusive responsibility, ABB declares that the air conditioners and heat exchangers they market comply with the provisions of the following directives 89/392/CEE, 89/337/CEE, 91/368/CEE, 93/47/CEE.
Reference Standards: UNI EN 292, UNI EN 294, CEI 50081-2, IEC 50082-2, IEC 55011, IEC 60204-1.

**Thermostats**
Under their full and exclusive responsibility, ABB declares that the thermostats for temperature regulation they market comply with the provisions of the following directives 2006/95/CE (which replaces the 73/23/EEC and subsequent amendments).
Reference Standards: IEC 60730, 60730-1 “Automatic electrical controls for household and similar use”.

**Anti-condensation heaters**
ABB declares that anti-condensation heaters are in accordance with what expected by the following EU directives, including all the applicable changes:

- Low Voltage Directive 73/23/CEE (replaced by 2006/95/CEE)
- EMC Directive 2004/108/CEE

And that all the following requirements and/or technical specifics were applied:

- CEI EN 60335-1, Ed. 04/2004 “Safety of household and similar electrical appliances –part 1: General requirements”
- CEI EN 60335-1/A1/A11, Ed. 01/2006 “Safety of household and similar electrical appliances – Part 1: General requirements” A1:2004-12, A11:2004-02, IEC 60335-1:2002 variants.

## Chapter 5
Overall dimensions

**5**–2 **IS2 - IS2 EMC enclosures**

**5**–21 **Busbars**

**5**–23 **Single plinth**

**5**–24 **Wiring ducts**

**5**–28 **Aeration/ventilation**

**5**–30 **Air conditioners**

**5**–33 **Drillings**

**5**–34 **Accessorieses**

# Overall dimensions
## IS2-IS2 EMC enclosures

### Basic structure/External cable container

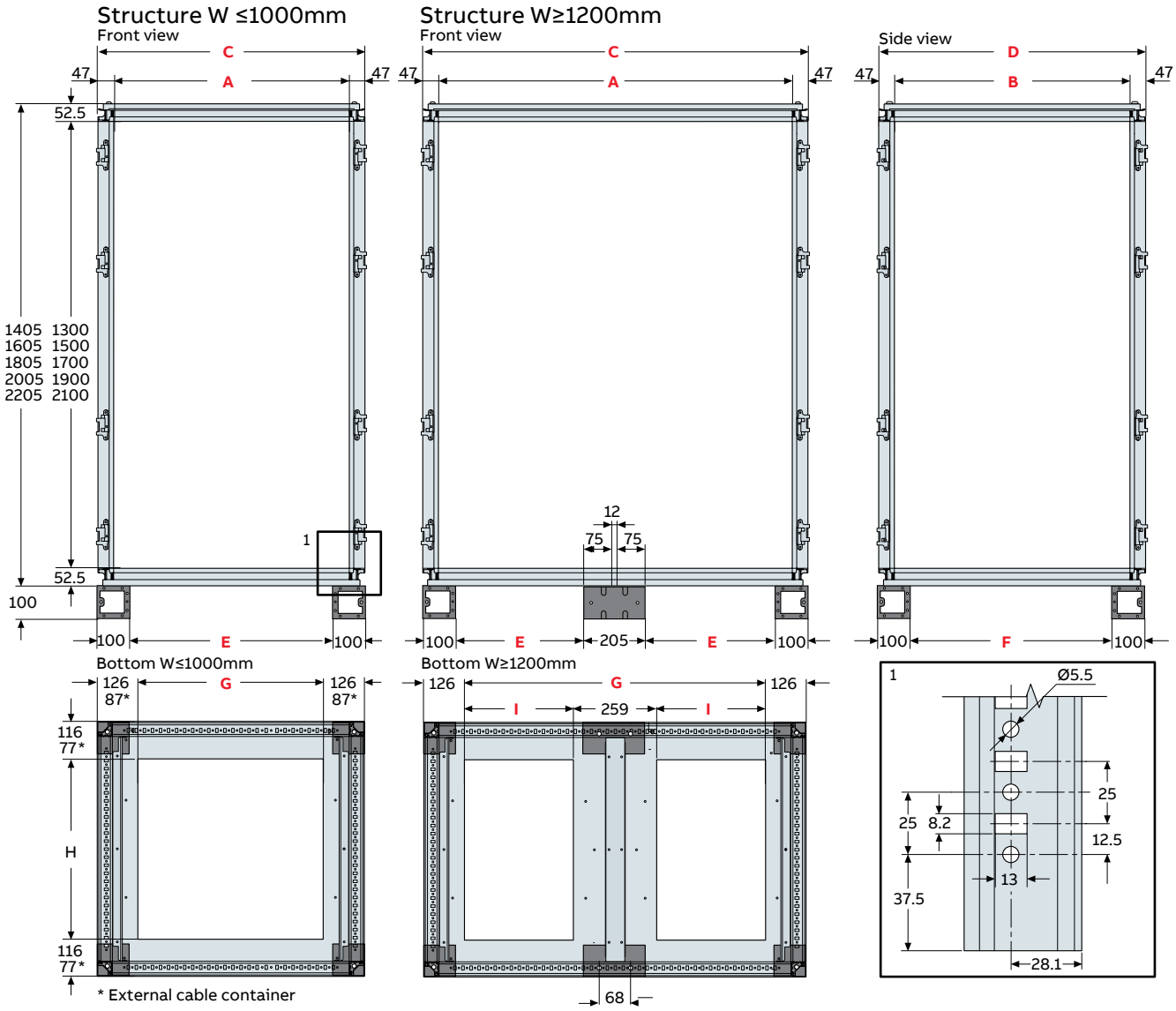


* External cable container

| A | B | C | D | E | F | G | H |
|---|---|---|---|---|---|---|---|
| 200 | 300 | 294 | 394 | 88 | 238 | 120 | 239 |
| | 400 | | 494 | | 338 | | 339 |
| | 500 | | 594 | | 438 | | 439 |
| | 700 | | 794 | | 638 | | 639 |
| | 900 | | 994 | | 838 | | 839 |
| 300 | 300 | 394 | 394 | 188 | 238 | 142 | 162 |
| | 400 | | 494 | | 338 | | 262 |
| | 500 | | 594 | | 438 | | 362 |
| | 700 | | 794 | | 638 | | 562 |
| | 900 | | 994 | | 838 | | 762 |
| 500 | 300 | 594 | 394 | 388 | 238 | 342 | 162 |
| | 400 | | 494 | | 338 | | 262 |
| | 500 | | 594 | | 438 | | 362 |
| | 700 | | 794 | | 638 | | 562 |
| | 900 | | 994 | | 838 | | 762 |
| 700 | 300 | 794 | 394 | 588 | 238 | 542 | 162 |
| | 400 | | 494 | | 338 | | 262 |
| | 500 | | 594 | | 438 | | 362 |
| | 700 | | 794 | | 638 | | 562 |
| | 900 | | 994 | | 838 | | 762 |

| A | B | C | D | E | F | G | H | I |
|---|---|---|---|---|---|---|---|---|
| 900 | 300 | 994 | 394 | 788 | 188 | 742 | 162 | 341.5 |
| | 400 | | 494 | | 288 | | 262 | |
| | 500 | | 594 | | 388 | | 362 | |
| | 700 | | 794 | | 588 | | 562 | |
| | 900 | | 994 | | 788 | | 762 | |
| 1100 | 300 | 1194 | 394 | 391,5 | 188 | 942 | 162 | |
| | 400 | | 494 | | 288 | | 262 | |
| | 500 | | 594 | | 388 | | 362 | |
| | 700 | | 794 | | 588 | | 562 | |
| 1500 | 300 | 1594 | 394 | 591,5 | 188 | 1342 | 162 | |
| | 400 | | 494 | | 288 | | 262 | |
| | 500 | | 594 | | 388 | | 362 | |
| | 700 | | 794 | | 588 | | 562 | |

Measurements are in millimetres

# Overall dimensions

IS2-IS2 EMC enclosures

## Placing structures side by side and fixing to the floor

Overall dimensions of several structures side by side

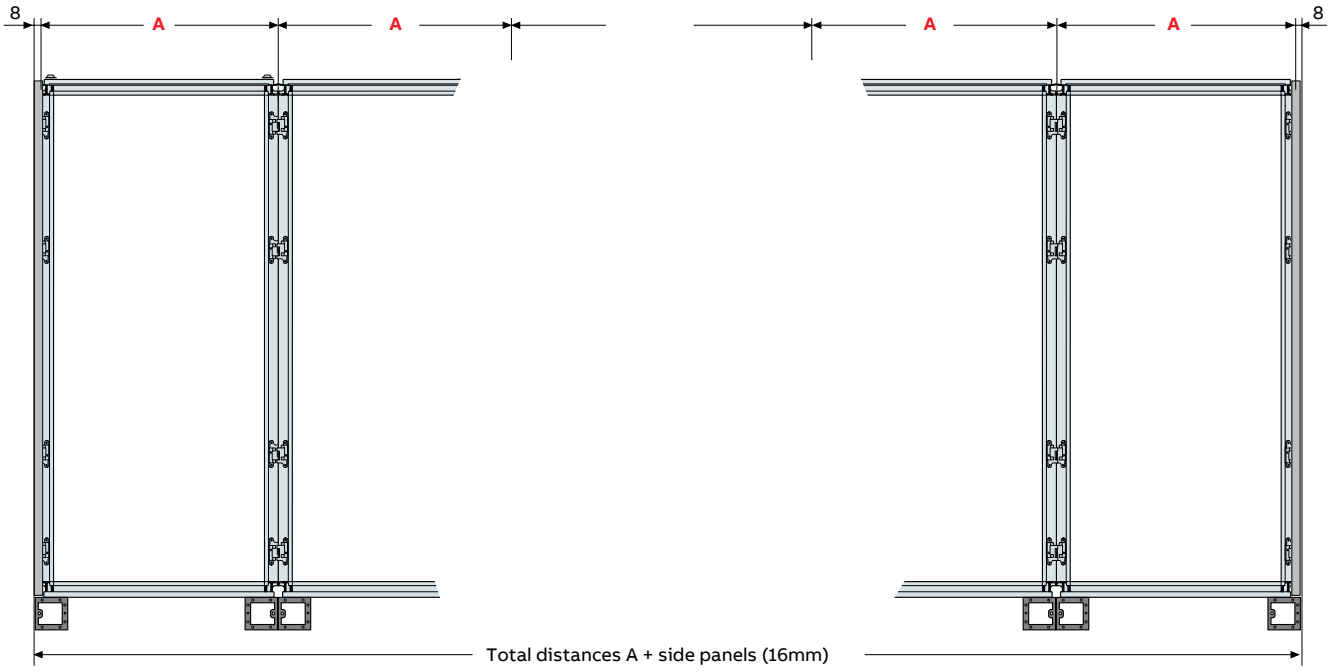


Fixing by means of plinth

For fixing, use M12 nut + dolly block

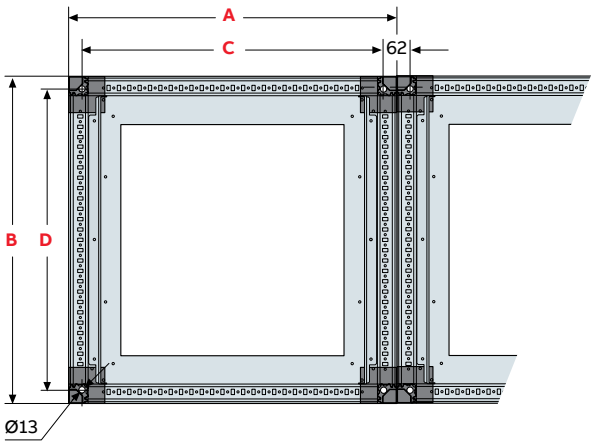


| A | B | C | D |
|---|---|---|---|
| 394 | 394 | 332 | 332 |
| | 494 | | 432 |
| | 594 | | 532 |
| | 794 | | 732 |
| | 994 | | 932 |
| 594 | 394 | 532 | 332 |
| | 494 | | 432 |
| | 594 | | 532 |
| | 794 | | 732 |
| | 994 | | 932 |
| 794 | 394 | 732 | 332 |
| | 494 | | 432 |
| | 594 | | 532 |
| | 794 | | 732 |
| | 994 | | 932 |
| 994 | 394 | 932 | 332 |
| | 494 | | 432 |
| | 594 | | 532 |
| | 794 | | 732 |
| | 994 | | 932 |
| 1194 | 394 | 1132 | 332 |
| | 494 | | 432 |
| | 594 | | 532 |
| | 794 | | 732 |
| 1594 | 394 | 1532 | 332 |
| | 494 | | 432 |
| | 594 | | 532 |
| | 794 | | 732 |

Measurements are in millimetres

# Overall dimensions

IS2-IS2 EMC enclosures

## Version with blind or glazed door

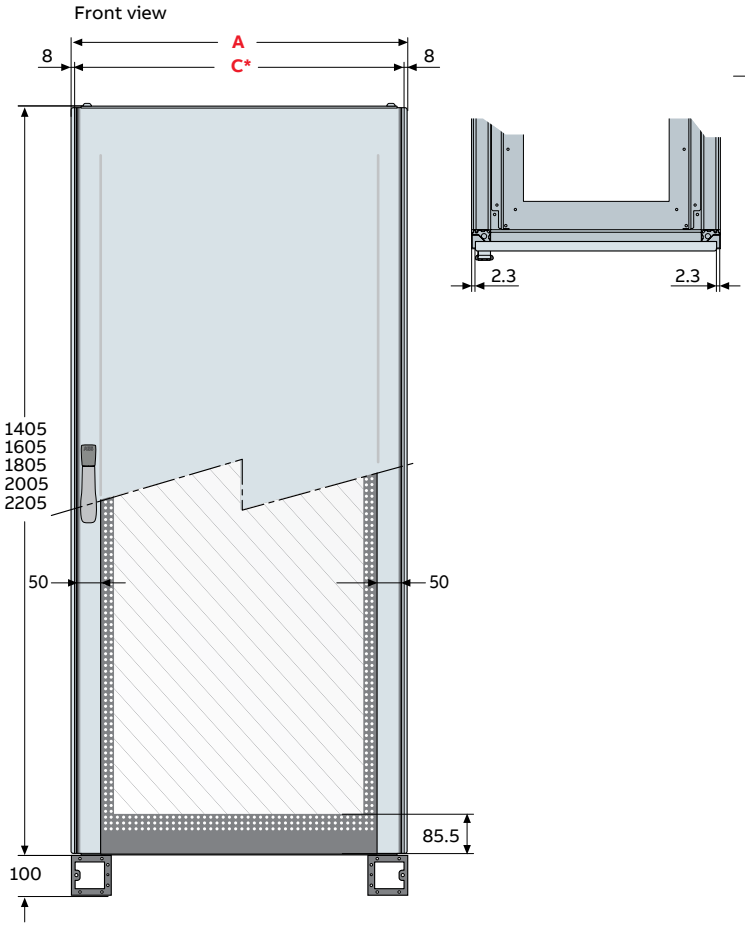





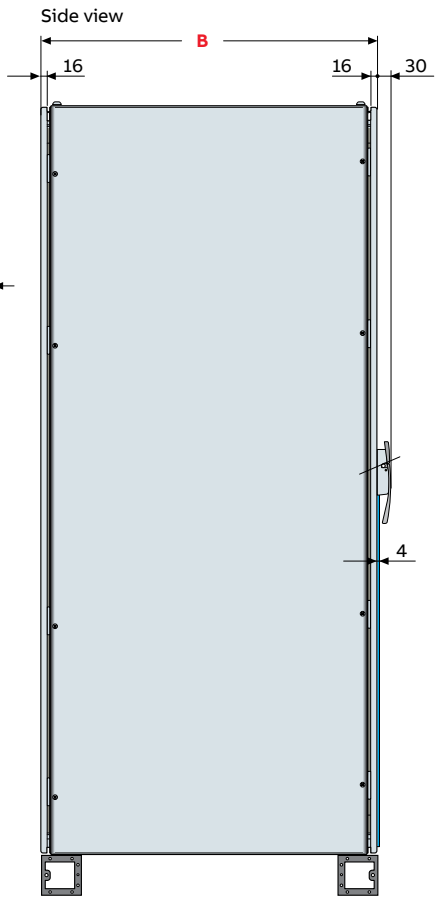


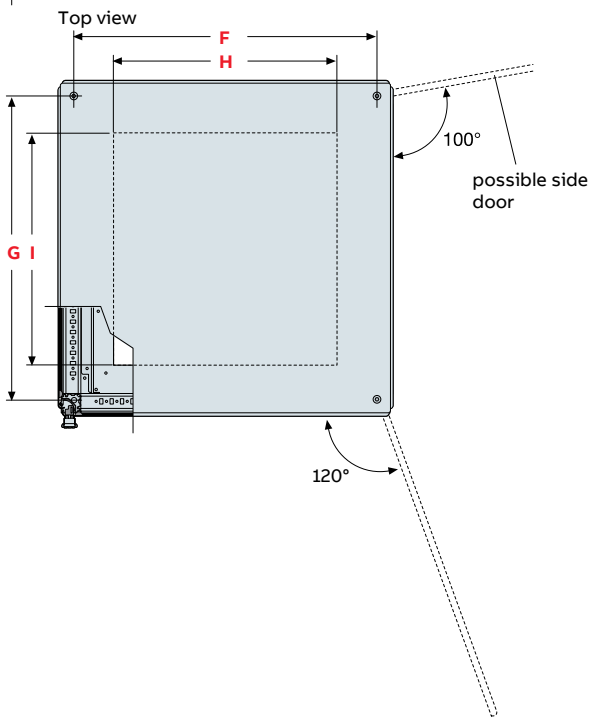


| A | B | C* | F | G | H | I |
|---|---|---|---|---|---|---|
| 410 | 410 | 394 | 332 | 332 | 142 | 162 |
| | 510 | | | 432 | | 262 |
| | 610 | | | 532 | | 362 |
| | 810 | | | 732 | | 562 |
| | 1010 | | | 932 | | 762 |
| 610 | 410 | 594 | 532 | 332 | 342 | 162 |
| | 510 | | | 432 | | 262 |
| | 610 | | | 532 | | 362 |
| | 810 | | | 732 | | 562 |
| | 1010 | | | 932 | | 762 |
| 810 | 410 | 794 | 732 | 332 | 542 | 162 |
| | 510 | | | 432 | | 262 |
| | 610 | | | 532 | | 362 |
| | 810 | | | 732 | | 562 |
| | 1010 | | | 932 | | 762 |
| 1010 | 410 | 994 | 932 | 332 | 742 | 162 |
| | 510 | | | 432 | | 262 |
| | 610 | | | 532 | | 362 |
| | 810 | | | 732 | | 562 |
| | 1010 | | | 932 | | 762 |

* External dimension without side panels

Measurements are in millimetres

# Overall dimensions

IS2-IS2 EMC enclosures

## Version with double blind door

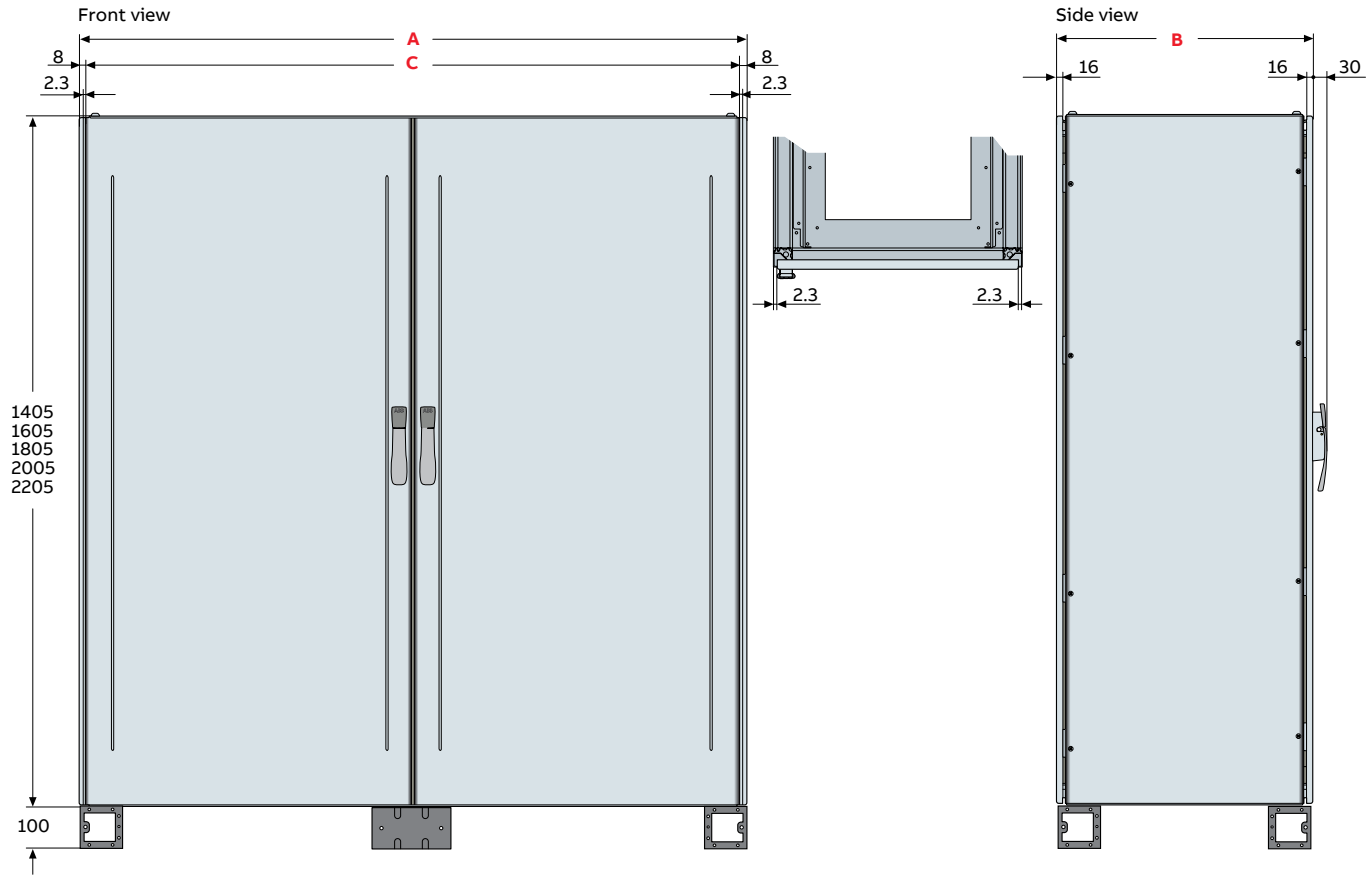


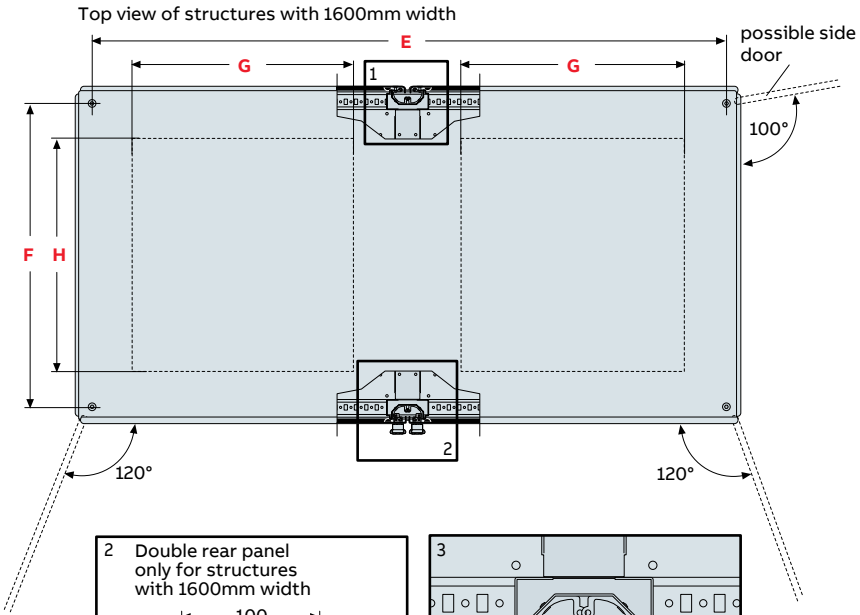


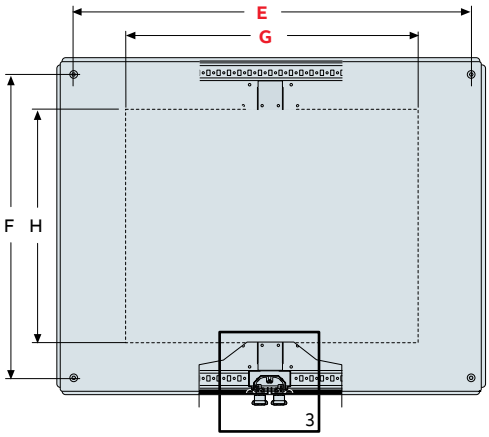


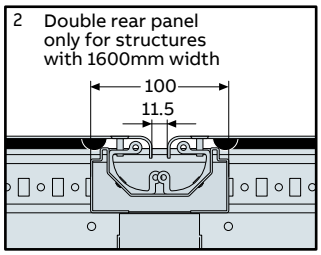


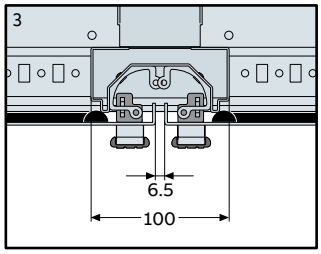


| A | B | C | E | F | G | H |
|---|---|---|---|---|---|---|
| 1010 | 410 | 994 | 932 | 332 | 742 | 162 |
| | 510 | | | 432 | | 262 |
| | 610 | | | 532 | | 362 |
| | 810 | | | 732 | | 562 |
| | 1010 | | | 932 | | 762 |
| 1210 | 410 | 1194 | 1132 | 332 | 942 | 162 |
| | 510 | | | 432 | | 262 |
| | 610 | | | 532 | | 362 |
| | 810 | | | 732 | | 562 |
| 1610 | 410 | 1594 | 1532 | 332 | 1342 | 162 |
| | 510 | | | 432 | | 262 |
| | 620 | | | 532 | | 362 |
| | 810 | | | 732 | | 562 |

Measurements are in millimetres

# Overall dimensions

IS2-IS2 EMC enclosures

## Version with cable container

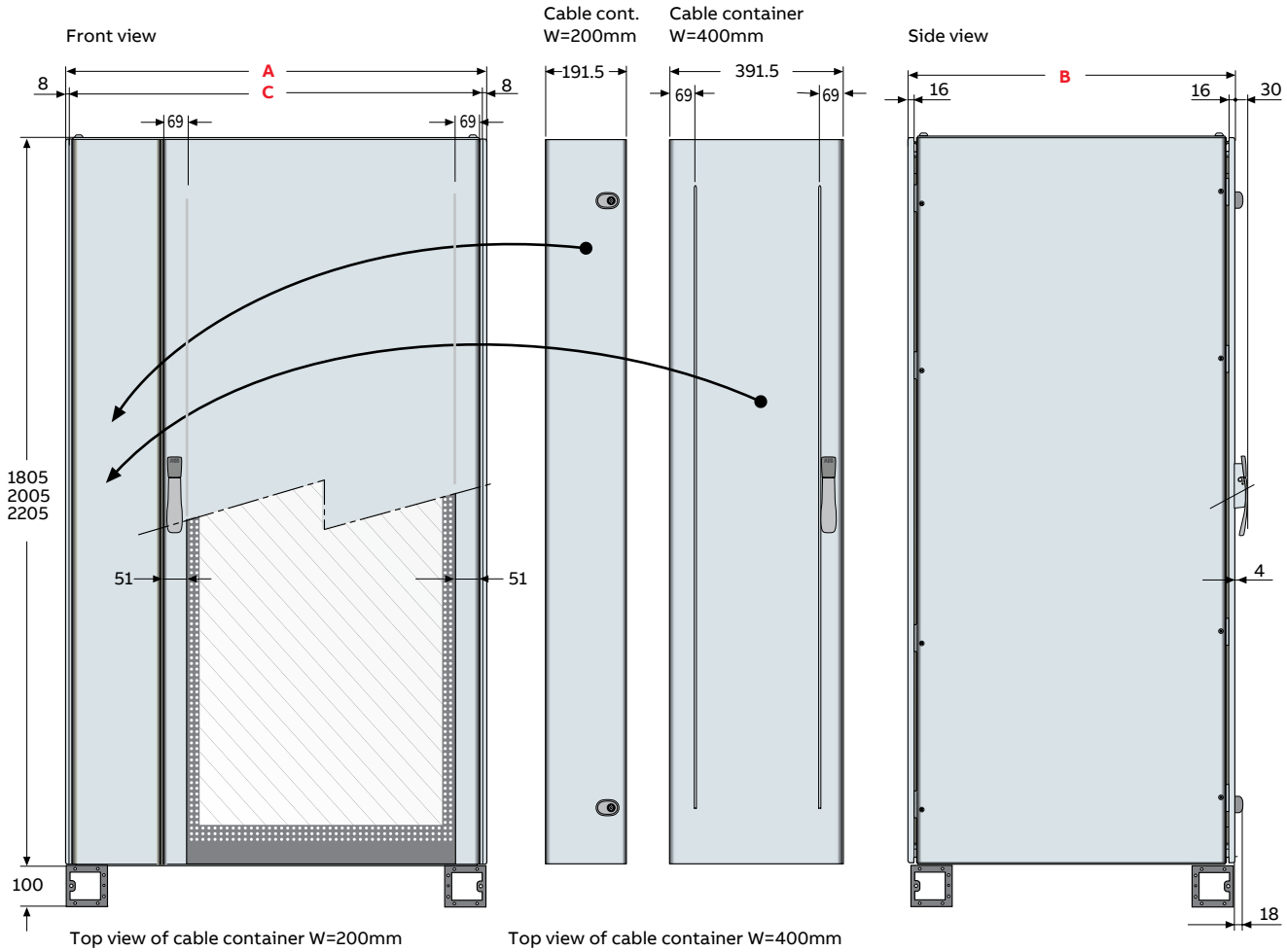


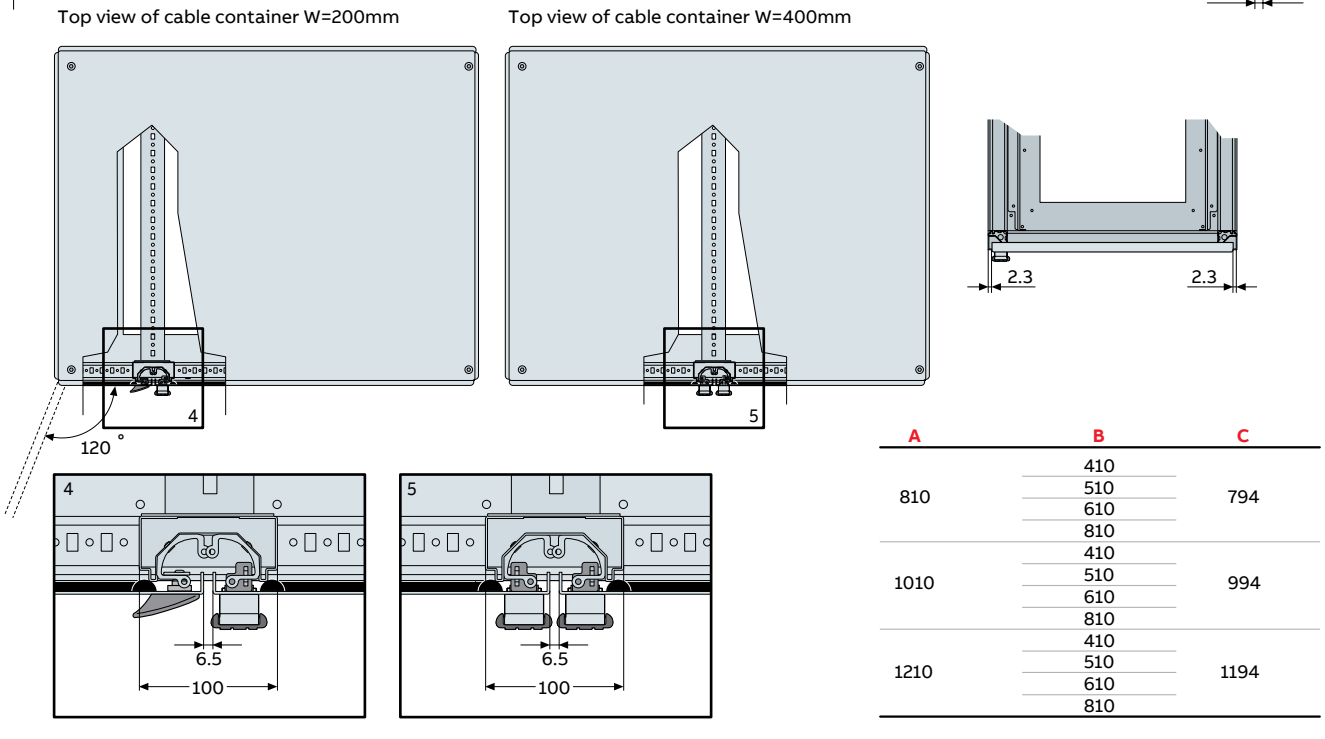


| A | B | C |
|---|---|---|
| 810 | 410 | 794 |
| | 510 | |
| | 610 | |
| | 810 | |
| 1010 | 410 | 994 |
| | 510 | |
| | 610 | |
| | 810 | |
| 1210 | 410 | 1194 |
| | 510 | |
| | 610 | |
| | 810 | |

Measurements are in millimetres

# Overall dimensions

IS2-IS2 EMC enclosures

## Cabinet with console

Note: for glass dimensions, please refer to the table below.

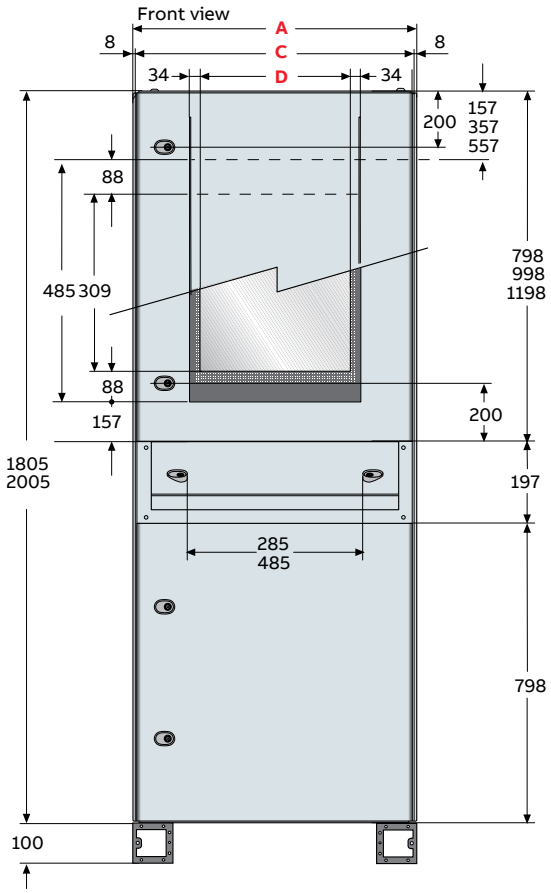


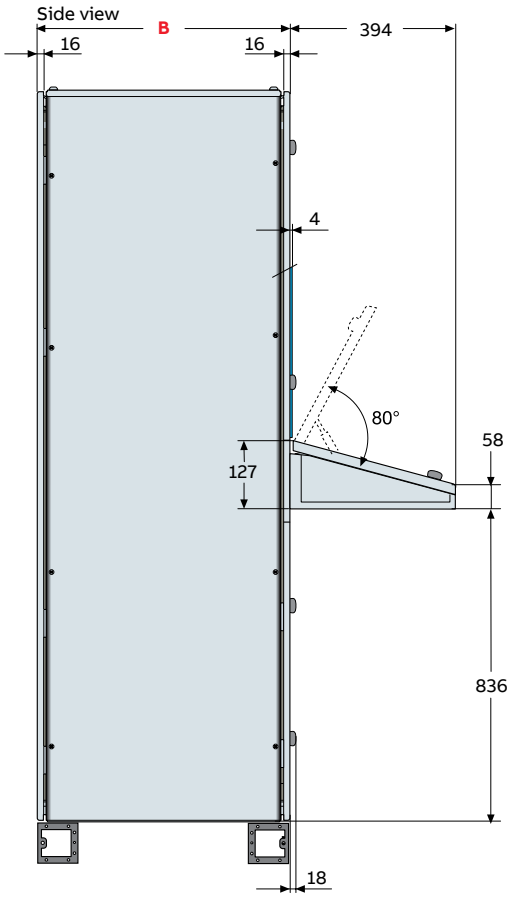


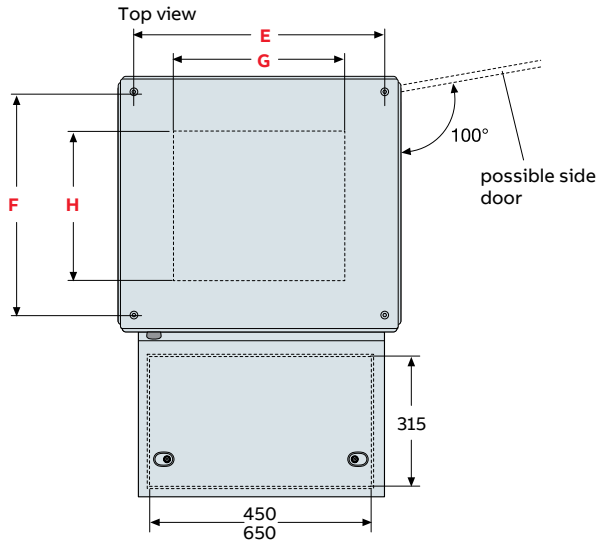


| A | B | C | D | E | F | G | H |
|---|---|---|---|---|---|---|---|
| 605.5 | 410 | 589.5 | 342 | 532 | 332 | 342 | 162 |
| | 510 | | | | 432 | | 262 |
| | 610 | | | | 532 | | 362 |
| | 810 | | | | 732 | | 562 |
| 805.5 | 410 | 789.5 | 542 | 732 | 332 | 542 | 162 |
| | 510 | | | | 432 | | 262 |
| | 610 | | | | 532 | | 362 |
| | 810 | | | | 732 | | 562 |

Measurements are in millimetres

## Cabinet with console drillings

Maximum useful overall dimensions for the drillings

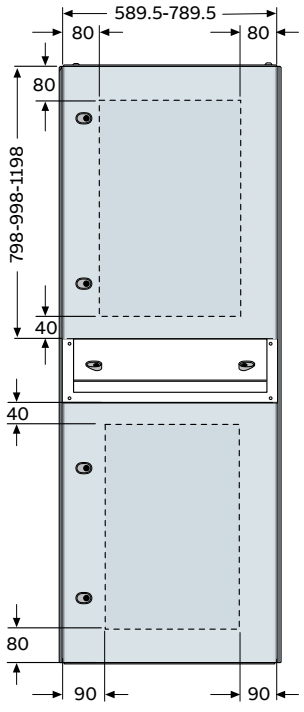


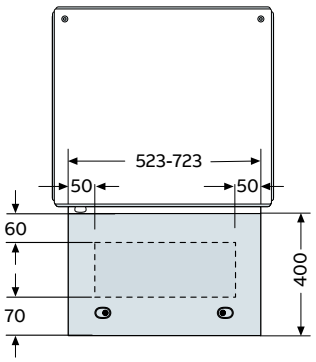

# Overall dimensions

IS2-IS2 EMC enclosures

## PC cabinet

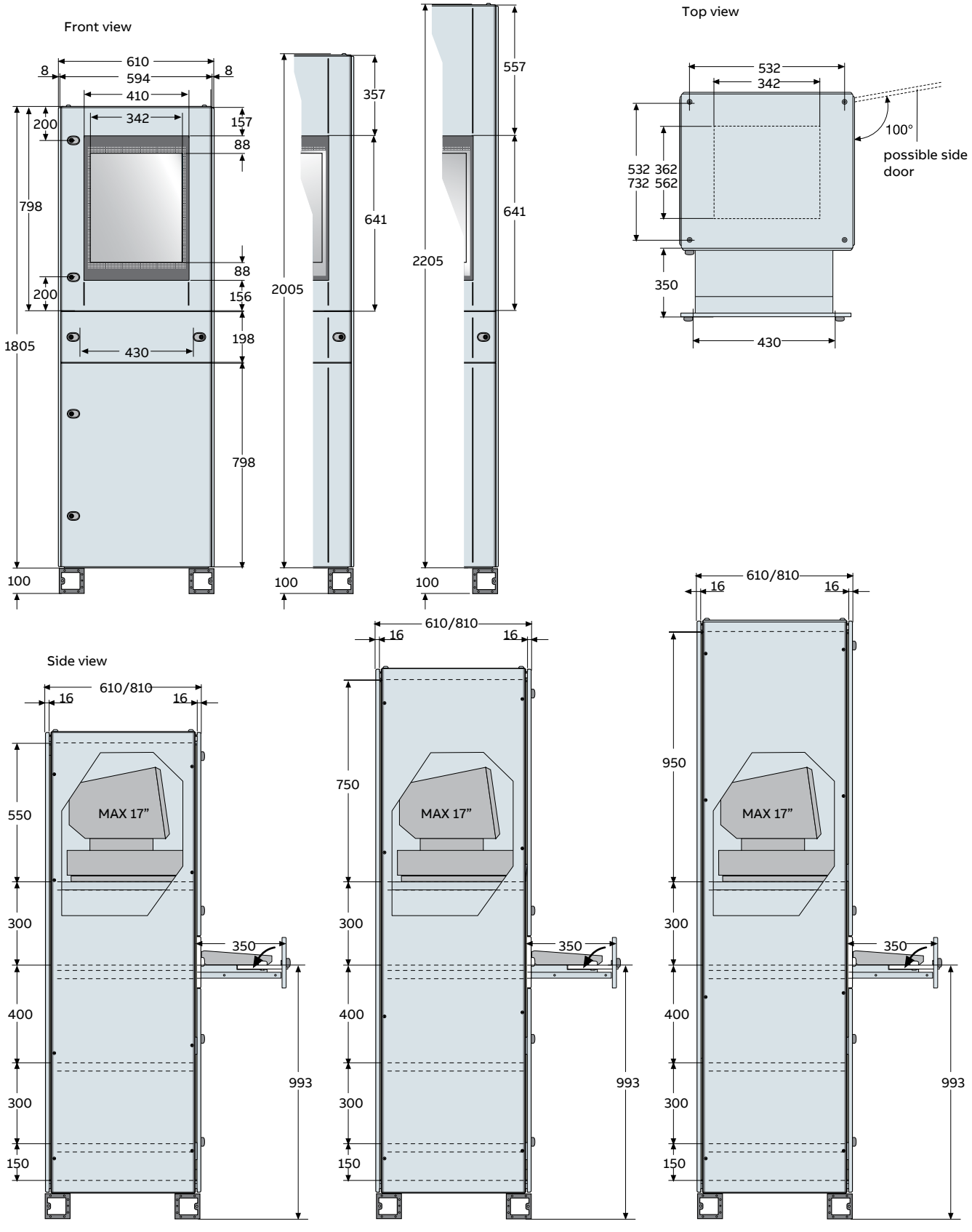


Measurements are in millimetres

# Overall dimensions

IS2-IS2 EMC enclosures

## Compartment Configuration

Front view

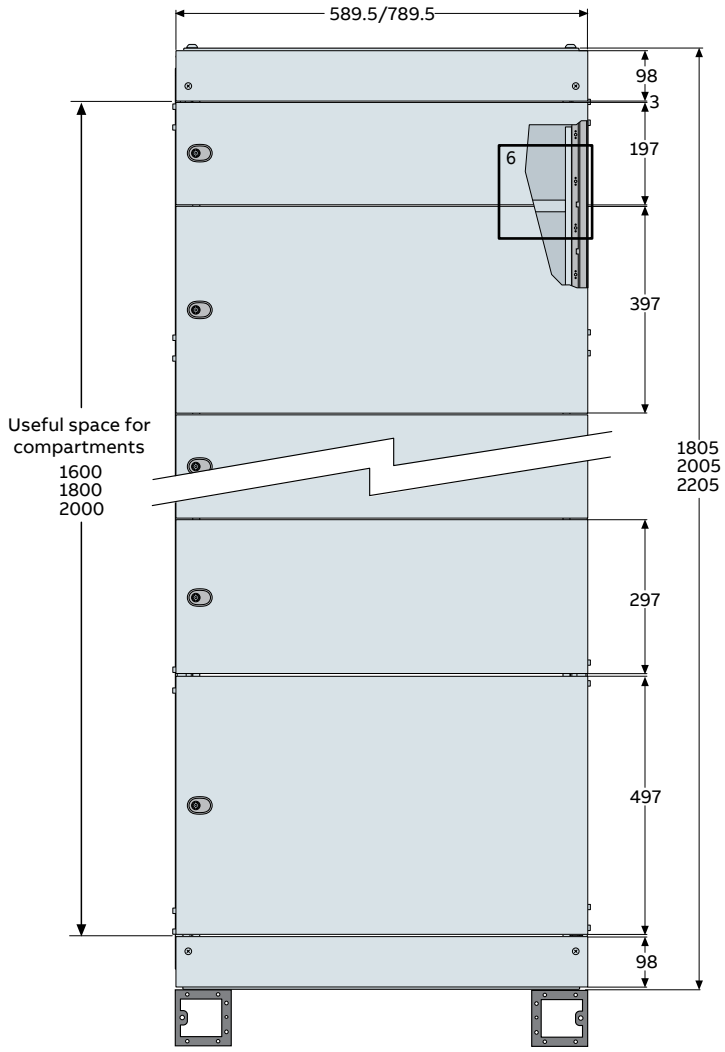


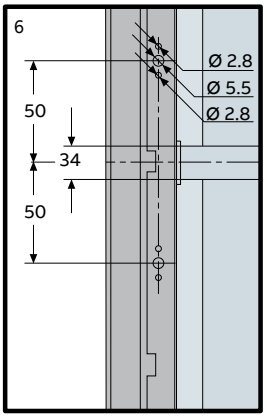


Base

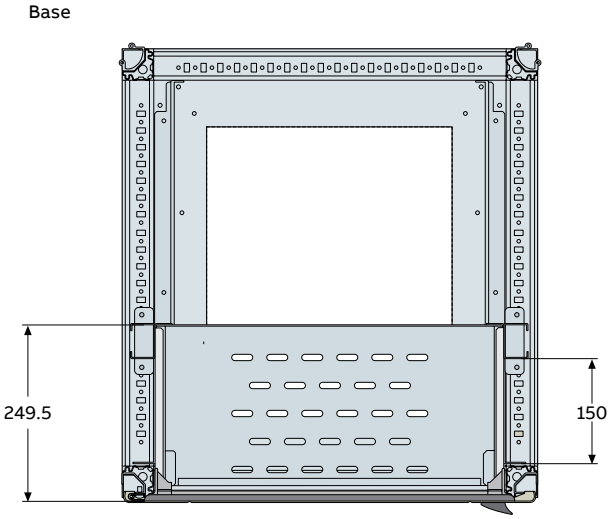


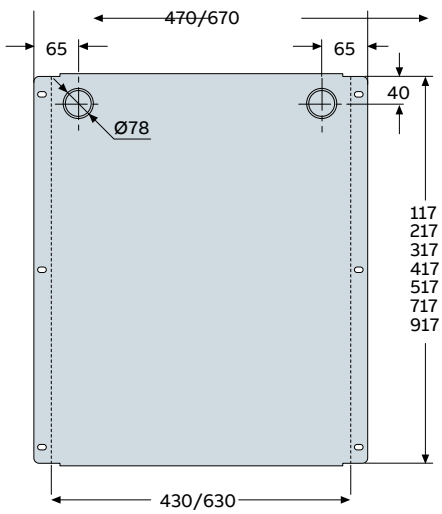


Measurements are in millimetres

# Overall dimensions

IS2-IS2 EMC enclosures

## 19” Rack frames

### Fixed rack frame

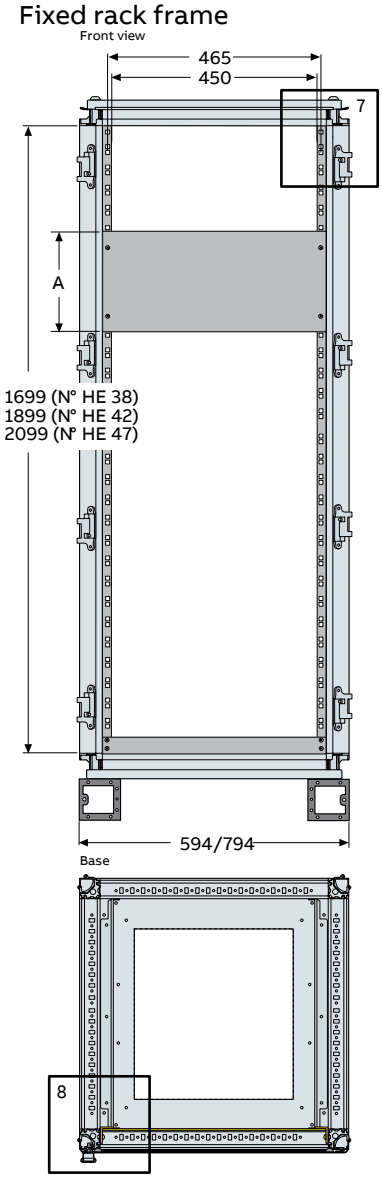


### Swing rack frame fixed rack frame

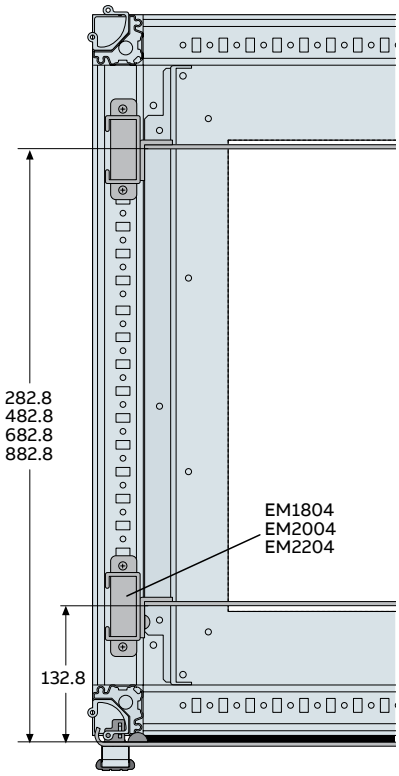


### Swing rack frame W=600mm

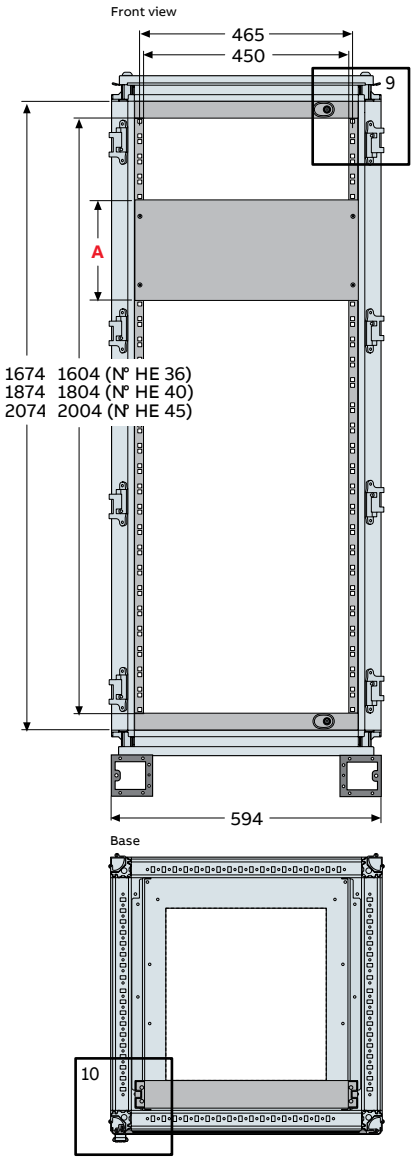


## Panels for 19” rack frames

| Code | A | No. HE |
|---|---|---|
| EG1991 | 44.45 | 1 |
| EG1902 | 89 | 2 |
| EG1903 | 133 | 3 |
| EG1904 | 177.5 | 4 |
| EG1905 | 222 | 5 |
| EG1906 | 266.5 | 6 |
| EG1907 | 311 | 7 |
| EG1908 | 355.5 | 8 |
| EG1909 | 400 | 9 |
| EG1910 | 444.5 | 10 |
| EG1911 | 488 | 11 |
| EG1912 | 533 | 12 |
| EG1913 | 577.5 | 13 |
| EG1914 | 622 | 14 |
| EG1915 | 666 | 15 |
| EG1916 | 711 | 16 |
| EG1917 | 755.5 | 17 |
| EG1918 | 800 | 18 |
| EG1999 | 844.5 | 19 |
| EG1920 | 889 | 20 |

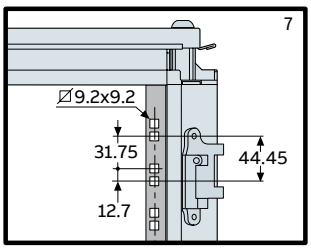


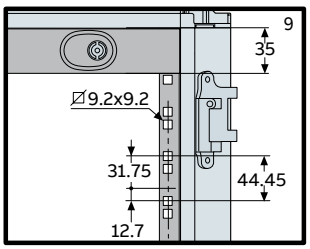


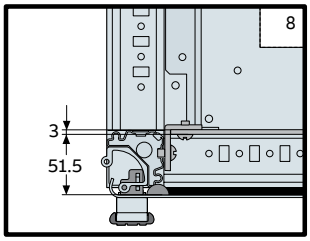


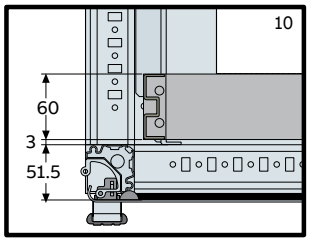


Measurements are in millimetres

# Overall dimensions

IS2-IS2 EMC enclosures

## 19” Rack frames

### Rack frame in structure W=800mm

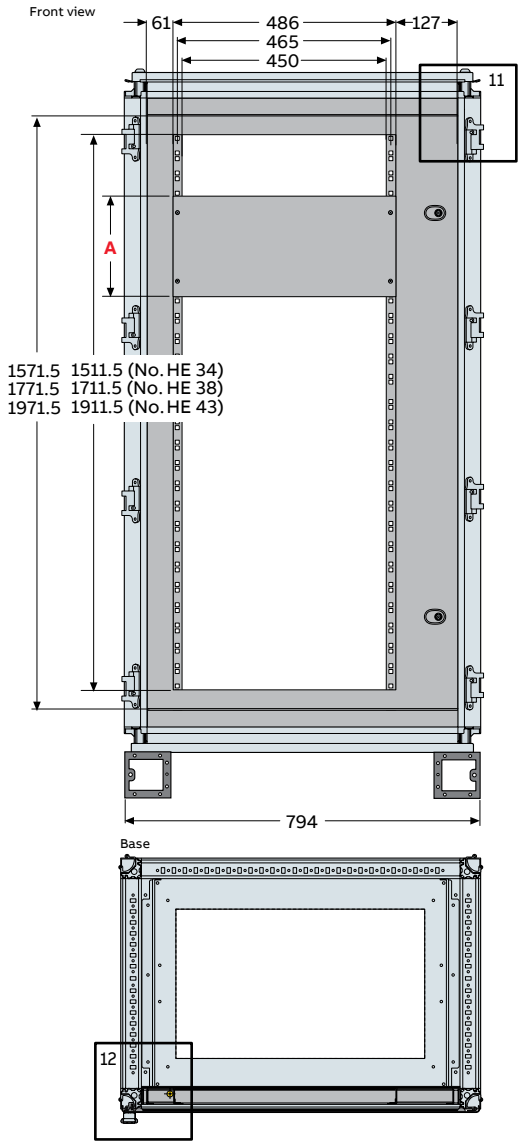


### Partial swing rack frame

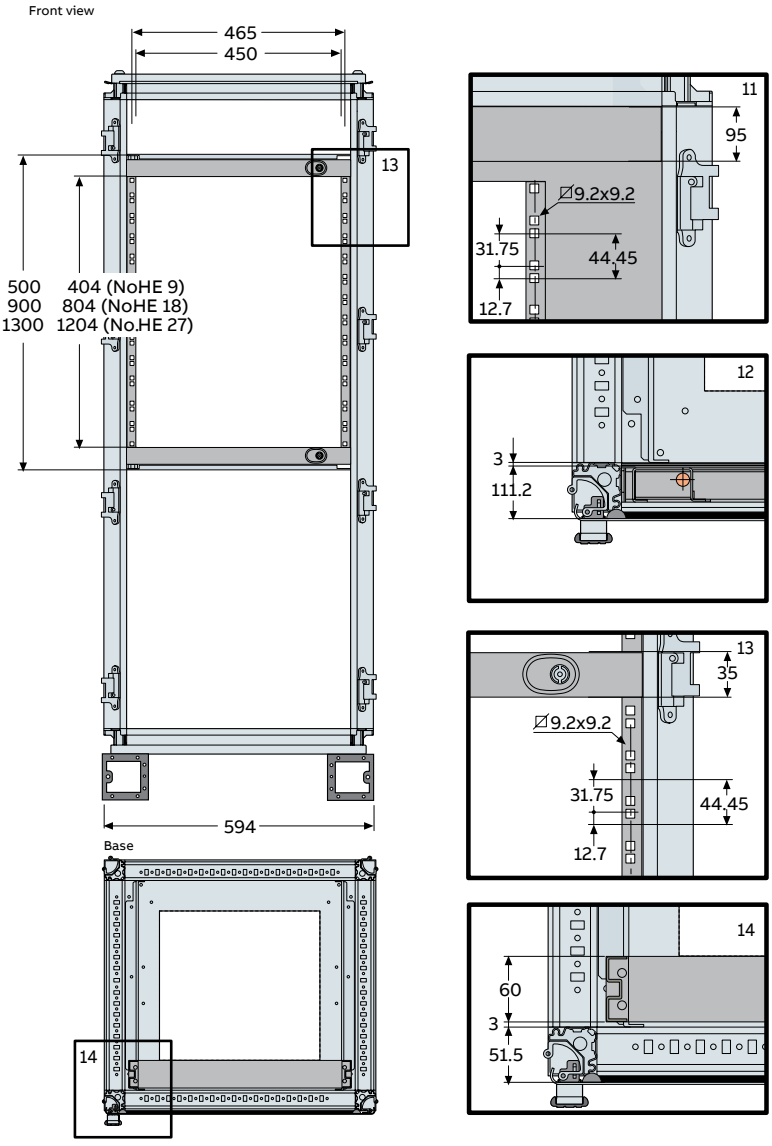


## Panels for 19” rack frames

| Code | A | No. HE |
|---|---|---|
| EG1991 | 44.45 | 1 |
| EG1902 | 89 | 2 |
| EG1903 | 133 | 3 |
| EG1904 | 177.5 | 4 |
| EG1905 | 222 | 5 |
| EG1906 | 266.5 | 6 |
| EG1907 | 311 | 7 |
| EG1908 | 355.5 | 8 |
| EG1909 | 400 | 9 |
| EG1910 | 444.5 | 10 |
| EG1911 | 488 | 11 |
| EG1912 | 533 | 12 |
| EG1913 | 577.5 | 13 |
| EG1914 | 622 | 14 |
| EG1915 | 666 | 15 |
| EG1916 | 711 | 16 |
| EG1917 | 755.5 | 17 |
| EG1918 | 800 | 18 |
| EG1999 | 844.5 | 19 |
| EG1920 | 889 | 20 |

Measurements are in millimetres

## Maximum overall apparatus installation dimensions in 19” swing rack frames

Swing rack frame with 90° opening

Rack frame in structure W=600mm

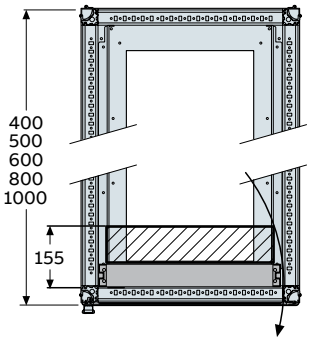


Swing rack frame with 150° opening

TRack frame eccentric in structure W=800mm

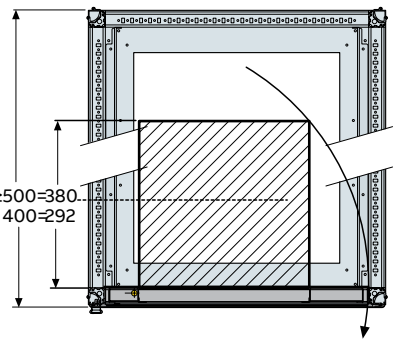

# Overall dimensions

IS2-IS2 EMC enclosures

## Version with kit for modular apparatus

Front view

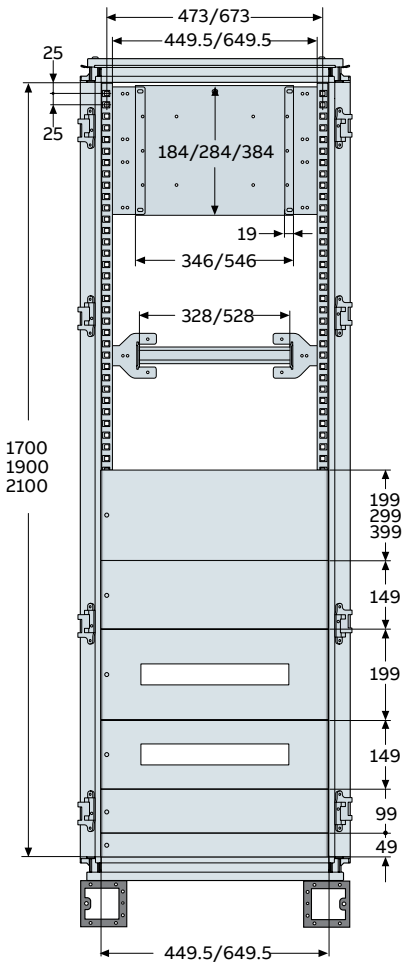


Base

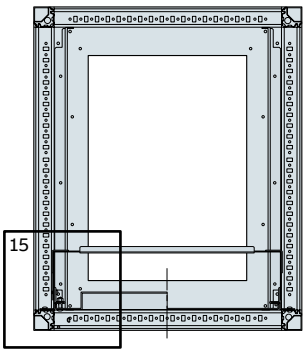


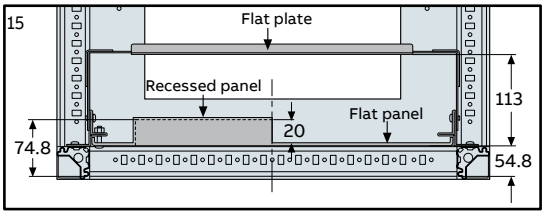


Panels

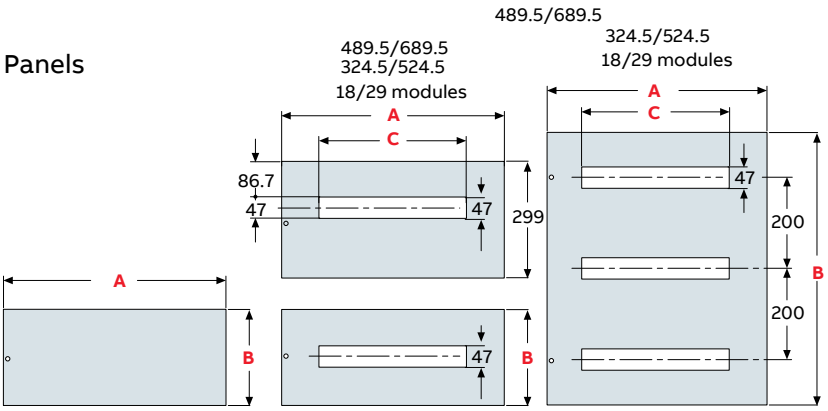


Blind panels

| Code | A | B |
|---|---|---|
| EH0562K | 489.5 | 49 |
| EH1062K | 489.5 | 99 |
| EH1562K | 489.5 | 149 |
| EH2062K | 489.5 | 199 |
| EH3063K | 489.5 | 299 |
| EH4062K | 489.5 | 399 |
| EH5062K | 489.5 | 499 |
| EH6062K | 489.5 | 599 |
| EH0582K | 689.5 | 49 |
| EH1082K | 689.5 | 99 |
| EH1582K | 689.5 | 149 |
| EH2082K | 689.5 | 199 |
| EH3082K | 689.5 | 299 |
| EH4082K | 689.5 | 399 |
| EH5082K | 689.5 | 499 |
| EH6082K | 689.5 | 599 |

Panel for modular instruments

1 DIN row

| Code | A | B | C | No. mod. |
|---|---|---|---|---|
| EH1518K | 489.5 | 149 | 324.5 | 18 |
| EH2018K | 489.5 | 199 | 324.5 | 18 |
| EH3018K | 489.5 | 299 | 324.5 | 18 |
| EH1529K | 689.5 | 149 | 524.5 | 29 |
| EH2029K | 689.5 | 199 | 524.5 | 29 |
| EH3029K | 689.5 | 299 | 524.5 | 29 |
| EH1524K | 489.5 | 149 | 432 | 24 |
| EH2024K | 489.5 | 199 | 432 | 24 |
| EH1536K | 689.5 | 149 | 634 | 36 |
| EH2036K | 689.5 | 199 | 634 | 36 |

3 DIN rows

| | | | | |
|---|---|---|---|---|
| EH6018K | 489.5 | 599 | 324.5 | 18 |
| EH6029K | 689.5 | 599 | 524.5 | 29 |
| EH6025K | 489.5 | 599 | 432 | 24 |
| EH6036K | 689.5 | 599 | 634 | 36 |

Instruments panels

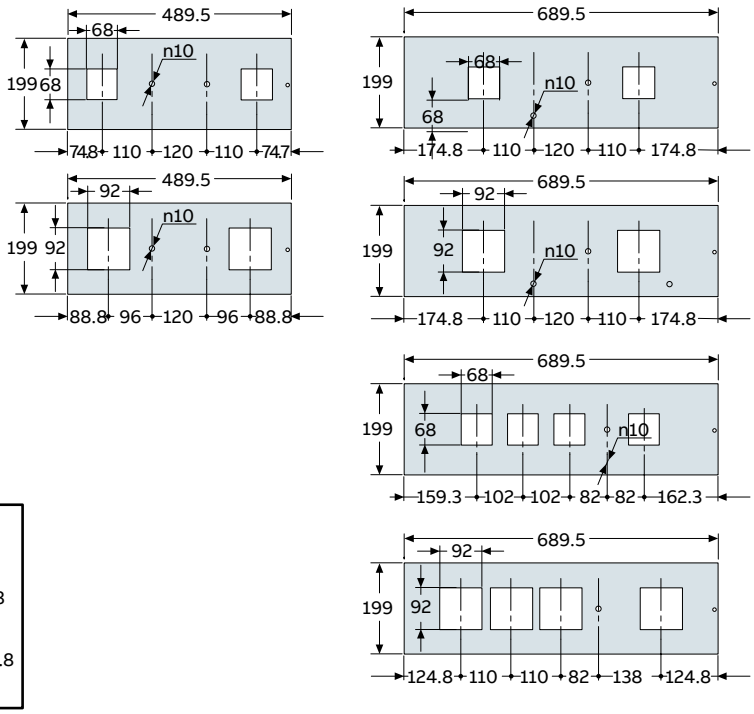


Measurements are in millimetres

# Overall dimensions

IS2-IS2 EMC enclosures

## Back plates

Standard

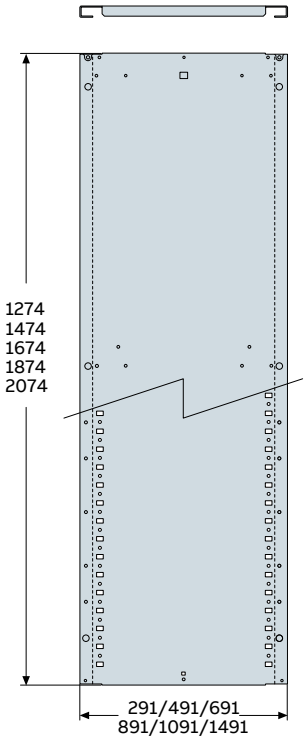


Oversized

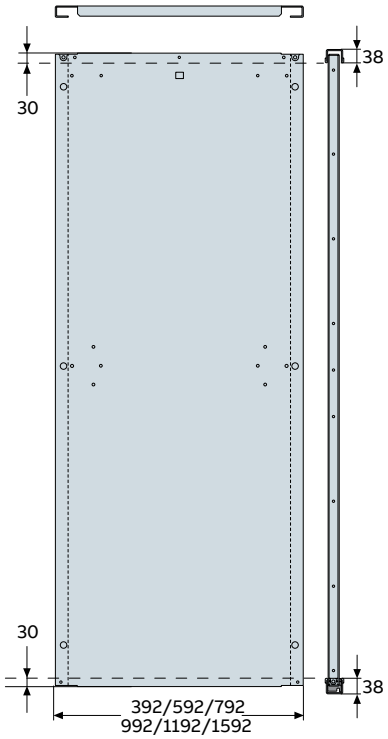


Back to back kit

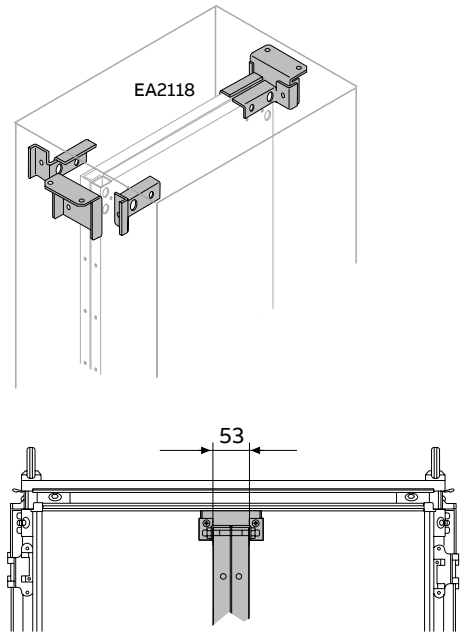


Standard plate

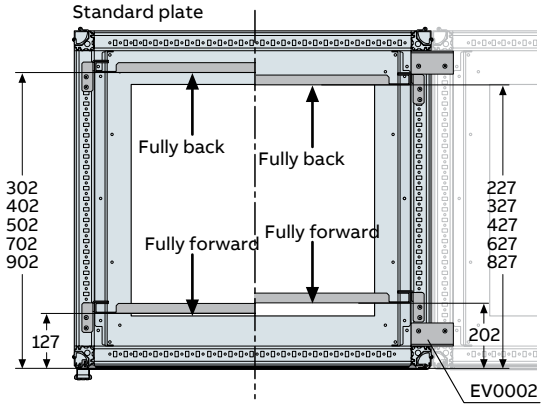


Oversized plate

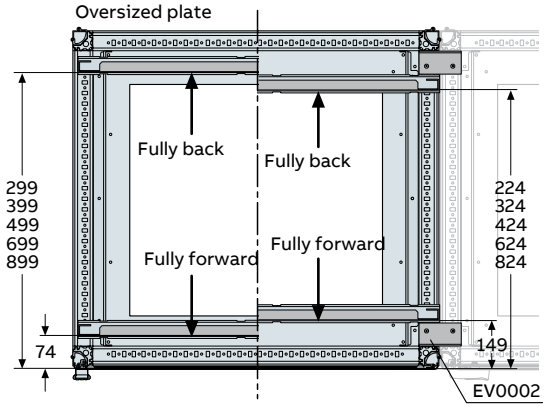


Oversized plate with apparatus holder uprights

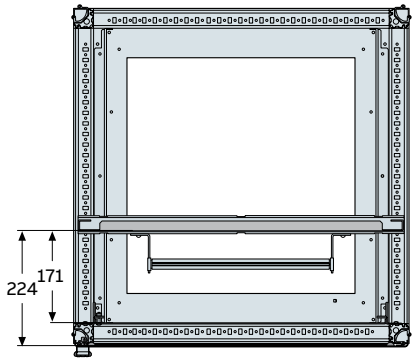


Kit for moving standard plate backwards

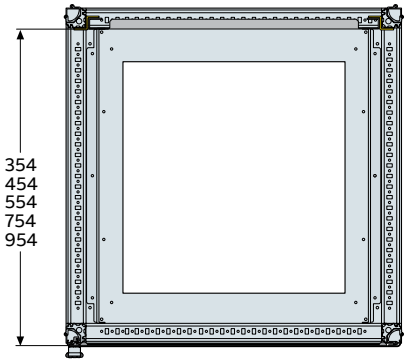


Measurements are in millimetres

# Overall dimensions

IS2-IS2 EMC enclosures

## Back plates

### Partial back plates

Do not require the depthwise upright

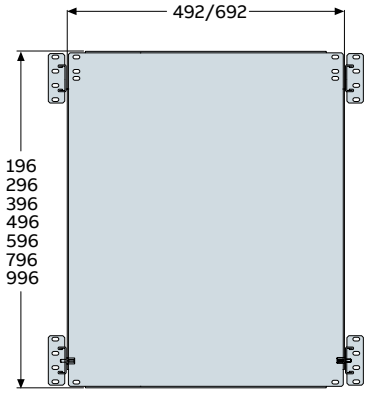


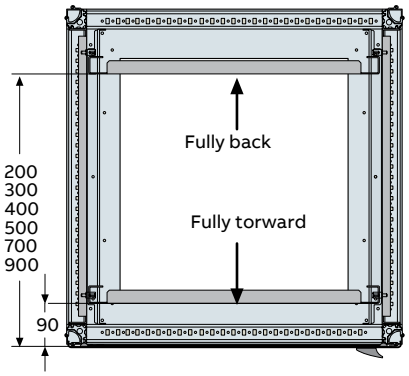


### Back plates for condensers

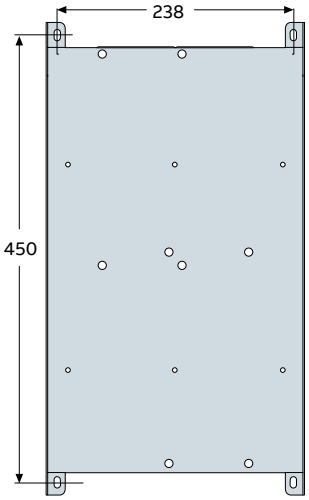


## Selection of partial back plate and panels according to the apparatus to be installed

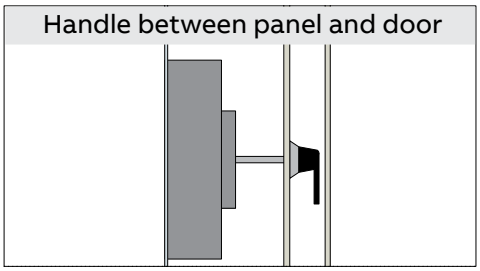


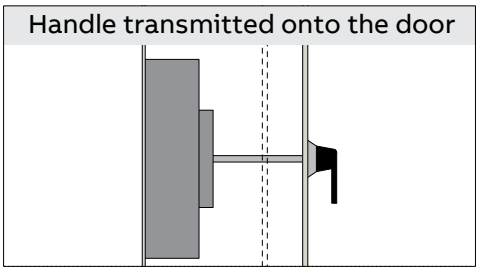


| Switch-disconnectors | Structures W=600mm Partial back plate | Panel | H (mm) | Structures W=800mm Partial back plate | Panel | H (mm) | Structures W=600mm Partial back plate | Panel | H (mm) | Structures W=800mm Partial back plate | Panel | H (mm) |
|---|---|---|---|---|---|---|---|---|---|---|---|---|
| OT200/250 | EA2062 | EH2062K | 200 | EA2081 | EH2082K | 200 | EH2065[2] | EH2062K | 200 | EH2085[2] | EH2082K | 200 |
| OT315/400 | EA3061 | EH3063K | 300 | EA3081 | EH3082K | 300 | EA3061 | EH3063K | 300 | EA3081 | EH3082K | 300 |
| OT630/800 | EA4061 | EH4062K | 400 | EA4081 | EH4082K | 400 | EA4061 | EH4062K | 400 | EA4081 | EH4082K | 400 |
| **Circuit-breakers** | | | | | | | | | | | | |
| Tmax T1-T2 -T 3 | EA2062 | EH2063K[1] | 200 | EA2083[1] | EH2083K | 200 | EH2065[2] | EH2062K | 200 | EH2085[2] | EH2082K | 200 |
| Tmax XT1-XT2-XT3-XT4 | EA2062 | EH2062K | 200 | EA2081 | EH2082K | 200 | | | | | | |
| Tmax T4-T5 | EA4061 | EH4062K | 400 | EA4081 | EH4082K | 200 | EA4061 | EH4062K | 400 | EA4081 | EH4082K | 200 |
| Tmax T6 | EA5061 | EH5062K | 500 | EA5081 | EH5082K | 500 | EA5061 | EH5062K | 500 | EA5081 | EH5082K | 500 |

[1] Blind recessed panel

[2] Blind apparatus-holder back plate

### Crosspieces for fixing accessories

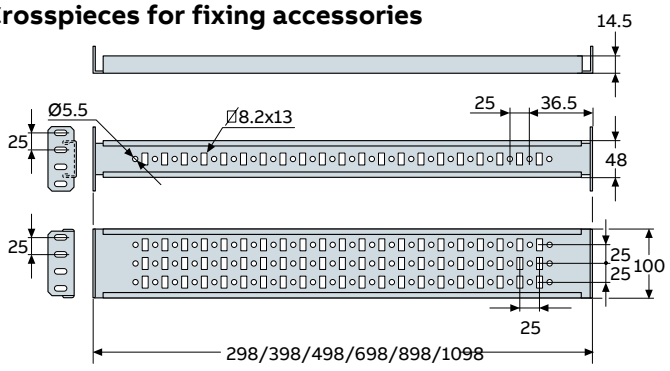


### Section for accessories

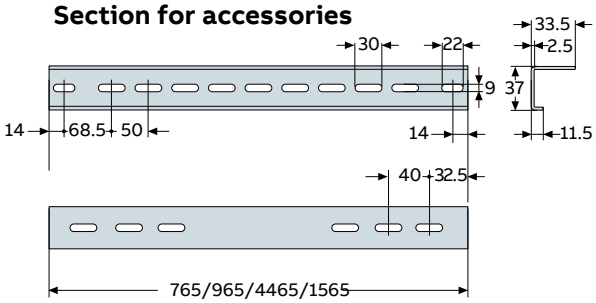


Measurements are in millimetres

# Overall dimensions

IS2-IS2 EMC enclosures

## Front or rear doors

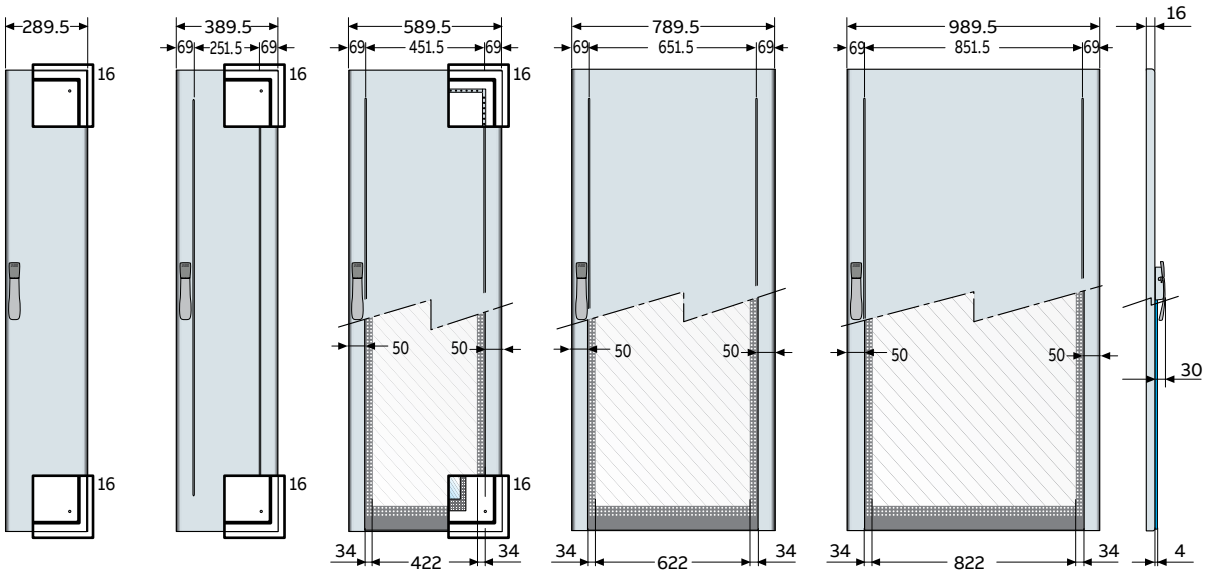


Inside of blind door (W≥600mm)

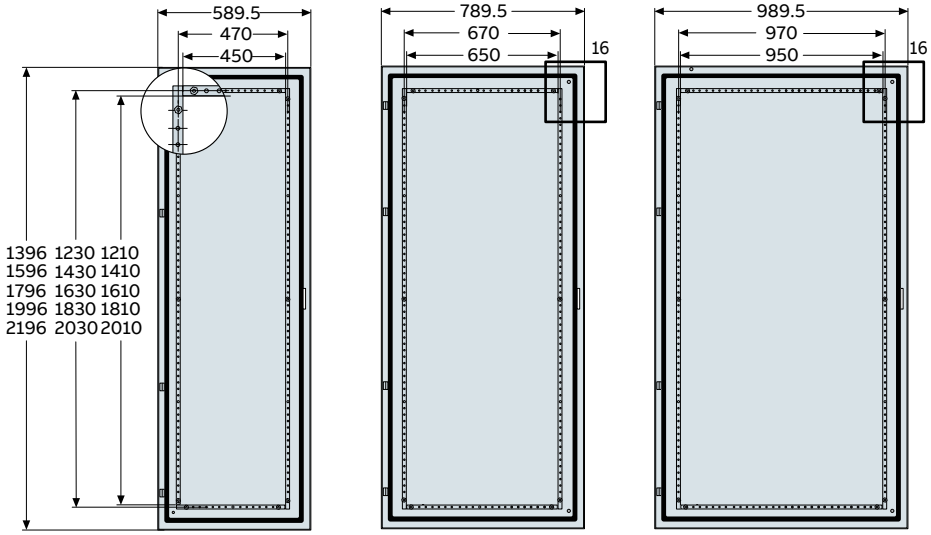


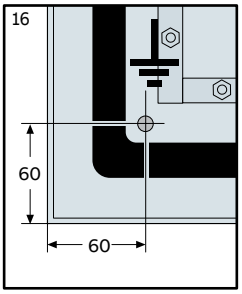


Measurements are in millimetres

# Overall dimensions

IS2-IS2 EMC enclosures

## Side covers

Side panels

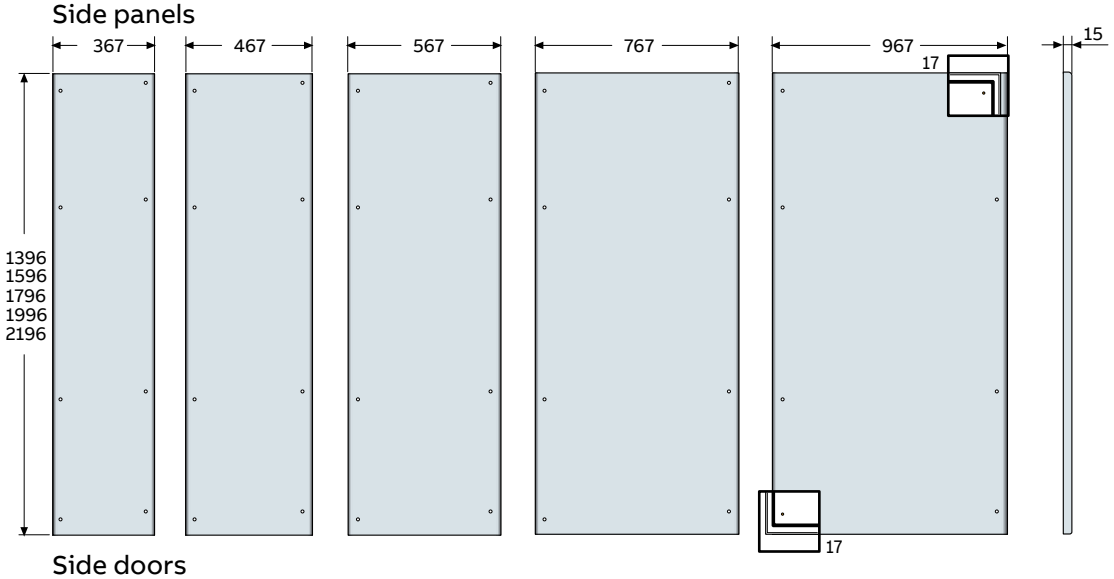


Side doors

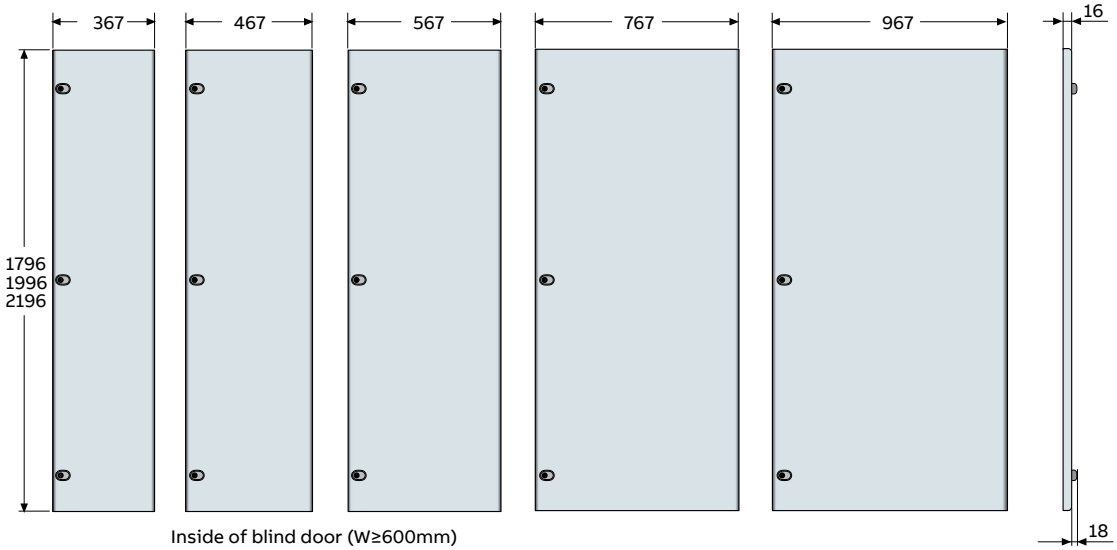


Inside of blind door (W≥600mm)

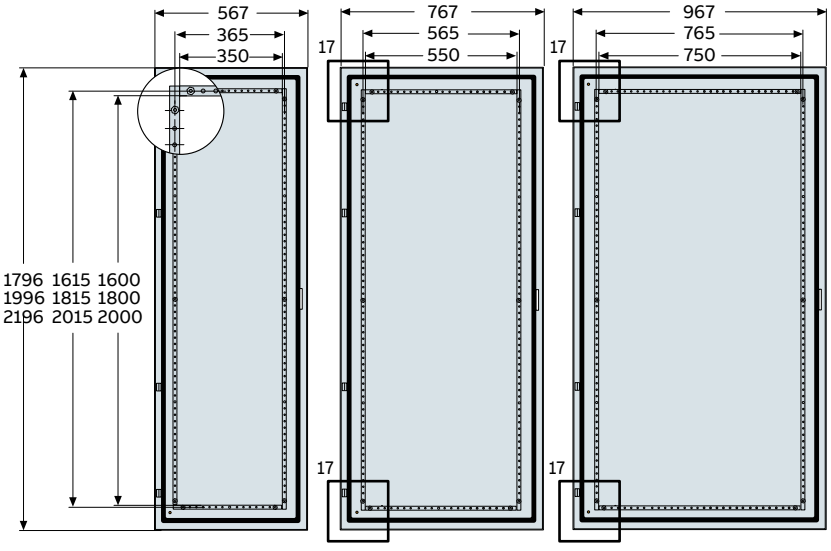


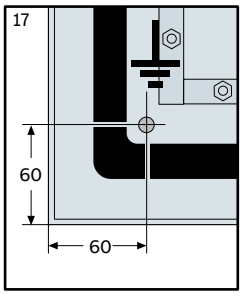


Measurements are in millimetres

# Overall dimensions

IS2-IS2 EMC enclosures

## Double front or rear doors

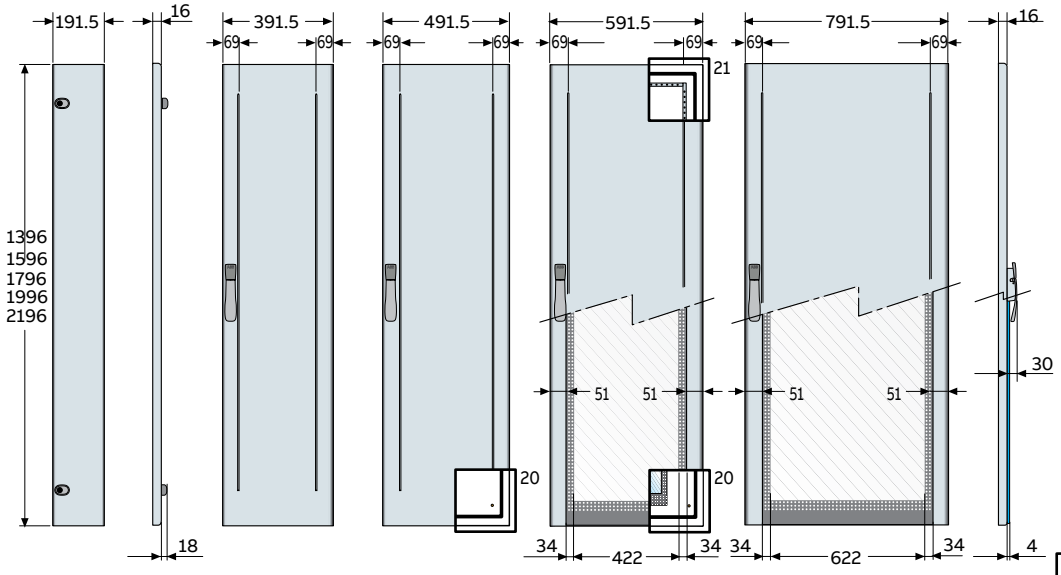


Inside of double blind door (W≥600mm)

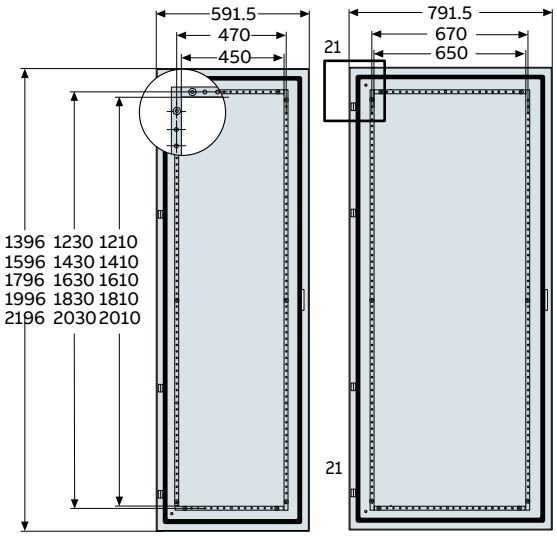


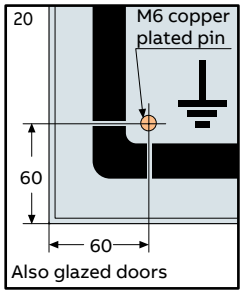


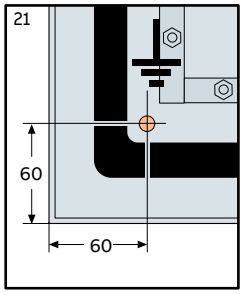


## Example of use of double doors

Mounting with intermediate upright and crosspieces in depth

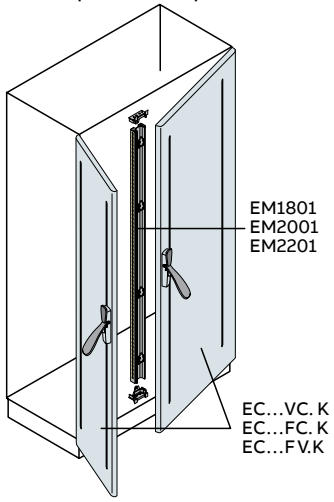


Mounting with blind doors with overlapping cosure (without interrmediate upright and crosspieces in depth)

ED1412S K
ED1612S K
ED1802S K
ED1804SK
ED1810S K
ED1812S K
ED1816S K
ED2002SK
ED2004SK
ED2010S K
ED2012S K
ED2016S K
ED2202S K
ED2204SK
ED2210S K
ED2212S K
ED2216S K

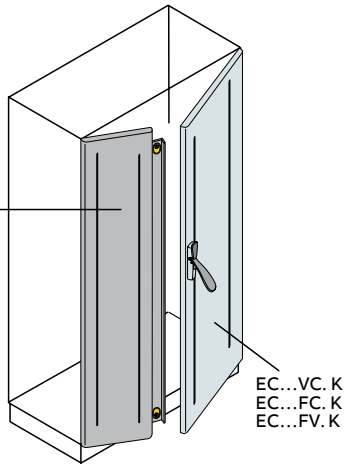


Measurements are in millimetres

# Overall dimensions

IS2-IS2 EMC enclosures

## Blind doors with overlapping closure

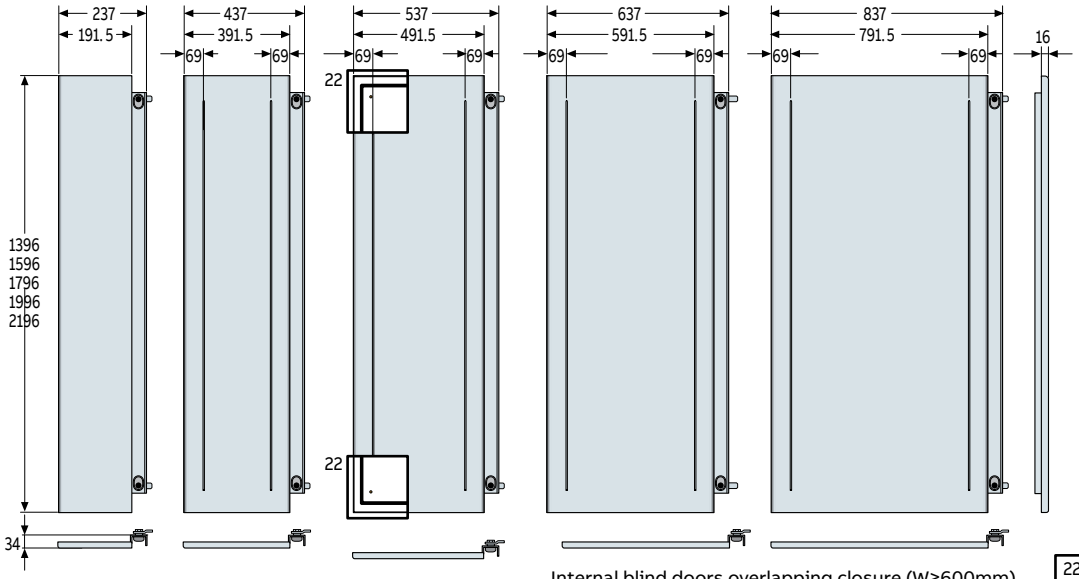


Internal blind doors overlapping closure (W≥600mm)

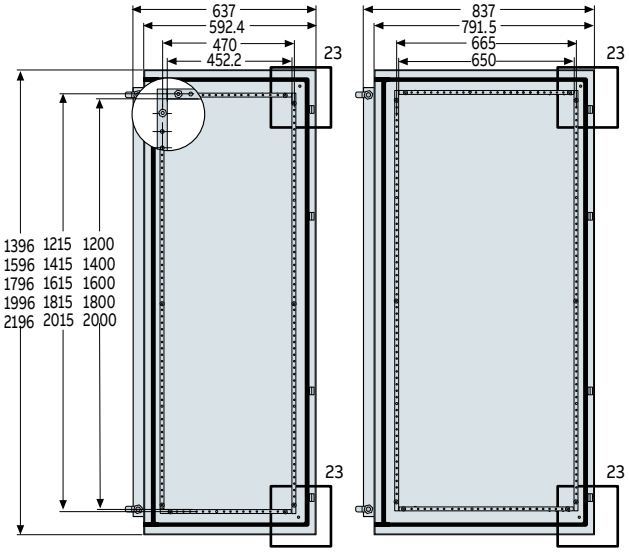


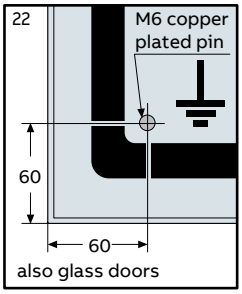


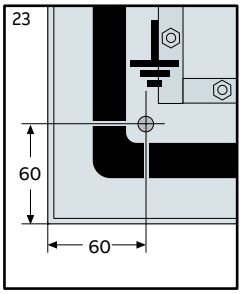


## Rear panels

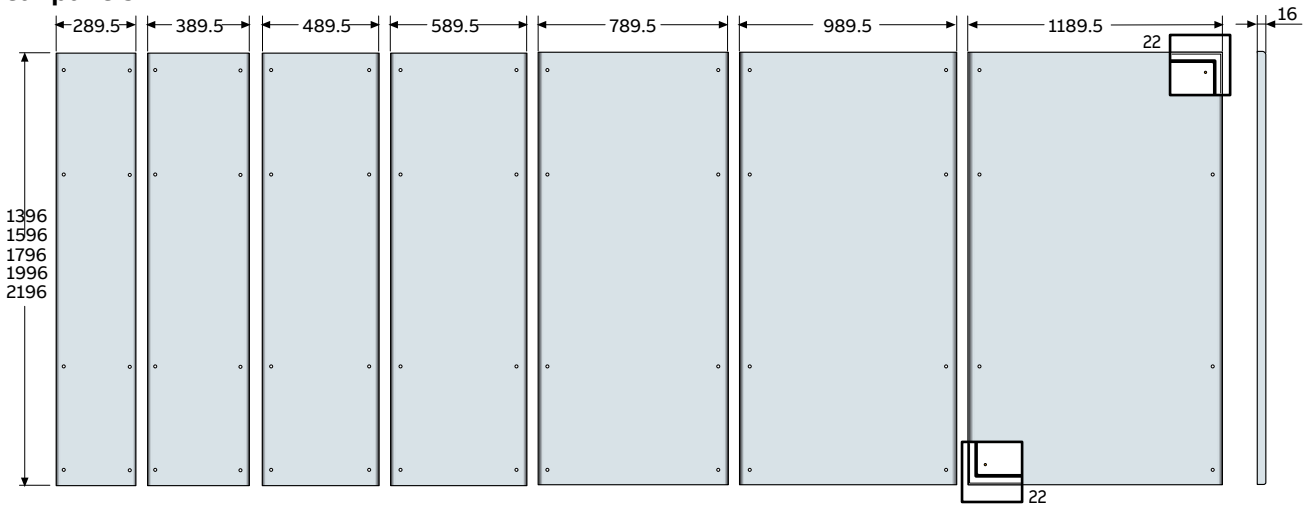


Measurements are in millimetres

# Overall dimensions

IS2-IS2 EMC enclosures

## Internal counterdoor

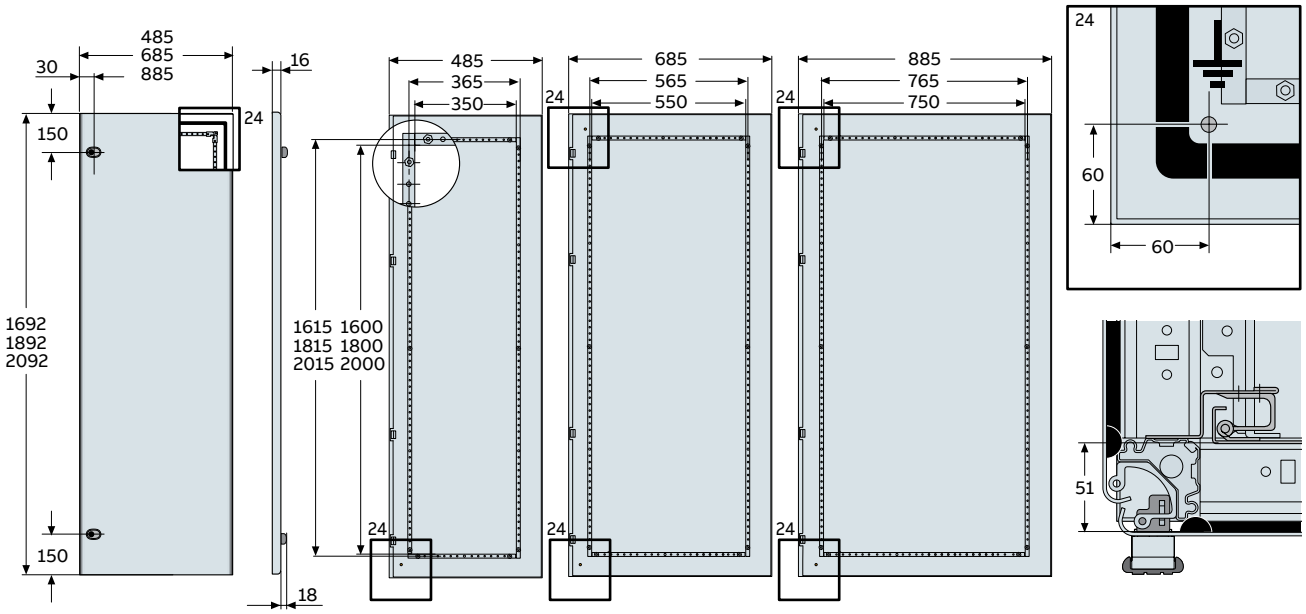


## Internal edged counterdoor

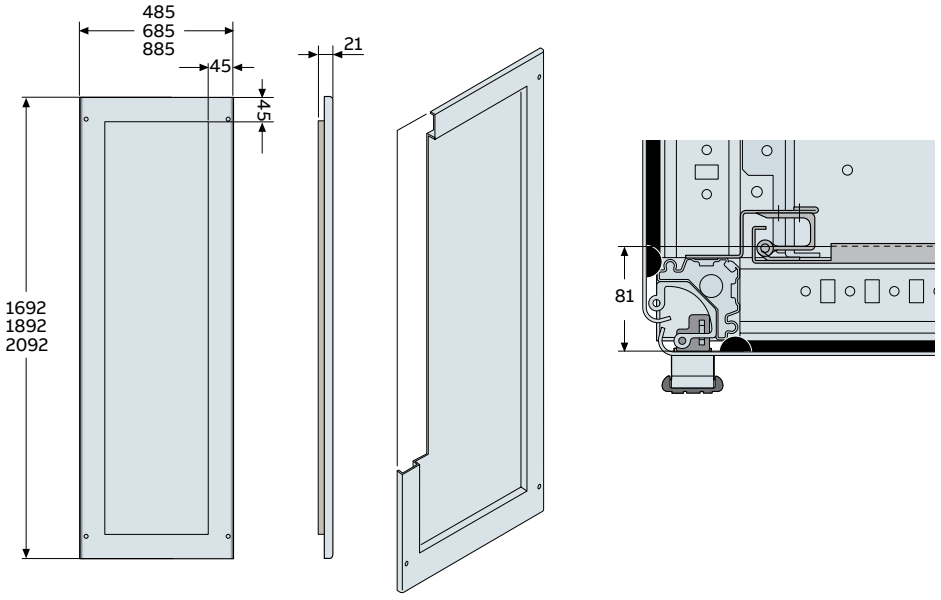


Measurements are in millimetres

# Overall dimensions

IS2-IS2 EMC enclosures

## Flanges for cable passage

Fixed flange

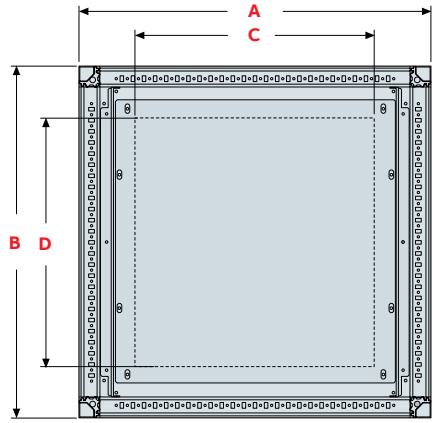


Sliding flanges

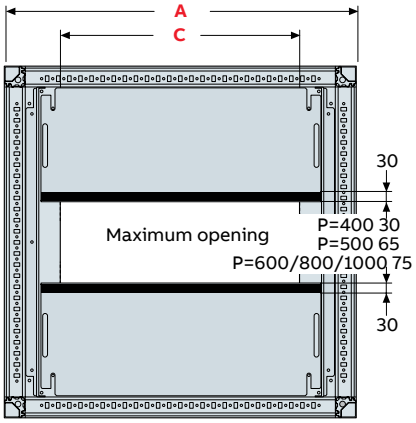


Built-up flanges

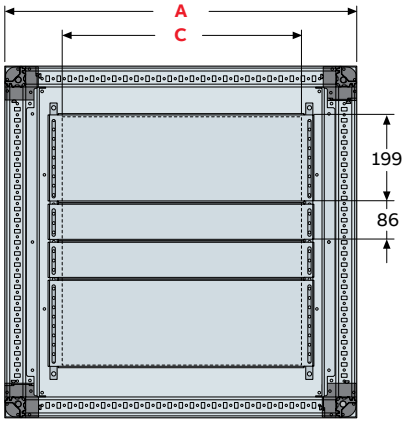


| A | B | C | D | Built-up flanges No. flanges H=199mm | Built-up flanges No. flanges H=86mm |
|---|---|---|---|---|---|
| 394 | 394 | 142 | 162 | - | 2 |
| | 494 | | 262 | 1 | 1 |
| | 594 | | 362 | 1 | 2 |
| | 794 | | 562 | 2 | 2 |
| | 994 | | 762 | 3 | 2 |
| 594 | 394 | 342 | 162 | - | 2 |
| | 494 | | 262 | 1 | 1 |
| | 594 | | 362 | 1 | 2 |
| | 794 | | 562 | 2 | 2 |
| | 994 | | 762 | 3 | 2 |
| 794 | 394 | 542 | 162 | - | 2 |
| | 494 | | 262 | 1 | 1 |
| | 594 | | 362 | 1 | 2 |
| | 794 | | 562 | 2 | 2 |
| | 994 | | 762 | 3 | 2 |

| A | B | C | D | Built-up flanges No. flanges H=199mm | Built-up flanges No. flanges H=86mm |
|---|---|---|---|---|---|
| 994 | 394 | 742 | 162 | - | 2 |
| | 494 | | 262 | 1 | 1 |
| | 594 | | 362 | 1 | 2 |
| | 794 | | 562 | 2 | 2 |
| | 994 | | 762 | 3 | 2 |
| 1194 | 394 | 942 | 162 | - | 2 |
| | 494 | | 262 | 1 | 1 |
| | 594 | | 362 | 1 | 2 |
| | 794 | | 562 | 2 | 2 |
| 1594 | 394 | 1342 | 162 | - | 2 |
| | 494 | | 262 | 1 | 1 |
| | 594 | | 362 | 1 | 2 |
| | 794 | | 562 | 2 | 2 |

## Top container for cable connection

Front view

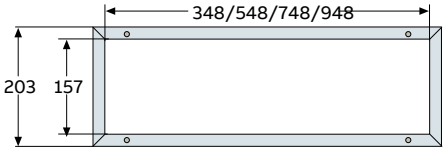


Side view

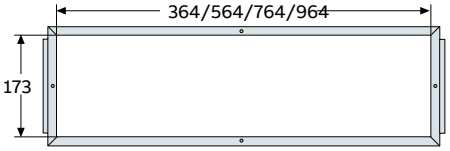


Top view

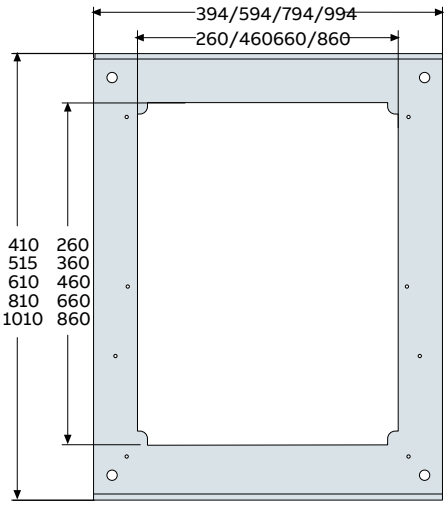


Measurements are in millimetres

# Overall dimensions
## Busbars

### Busbars with shaped section

#### Busbar

BA0400

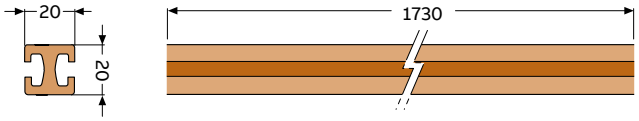


BA0800

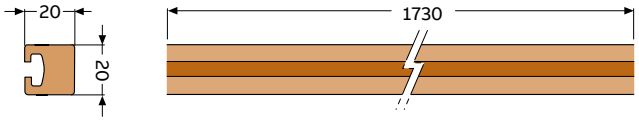


BA1250

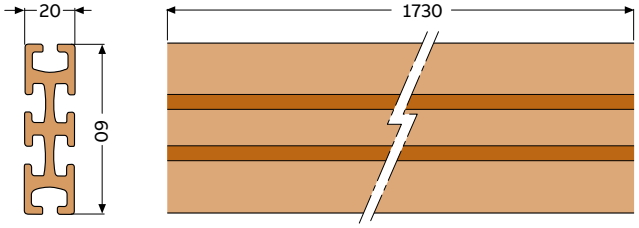


BA1600

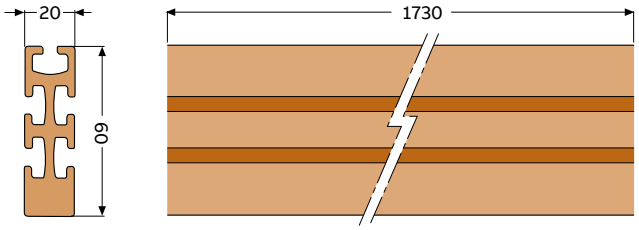


#### Insulator

PB 0803

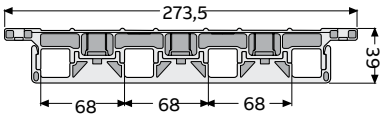


PB 1603

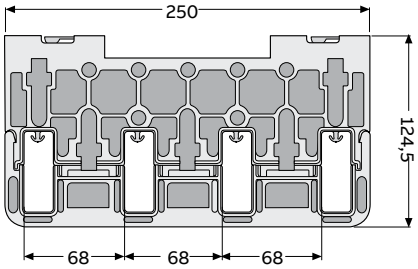


#### Accessories

AD1077

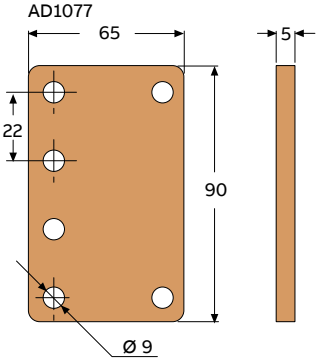


Measurements are in millimetres

# Overall dimensions

## Busbars

### Flat busbars

#### Busbar up to 630A

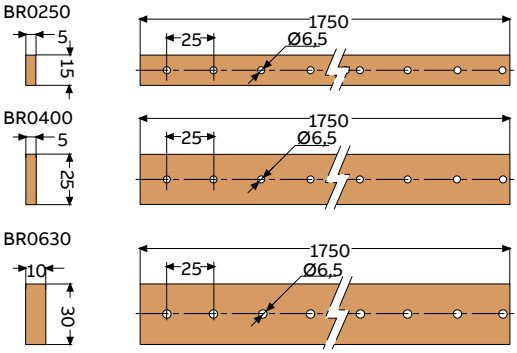


#### Insulators for busbars up to 630A

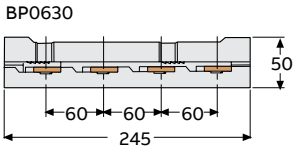


#### Busbar up to 1600A

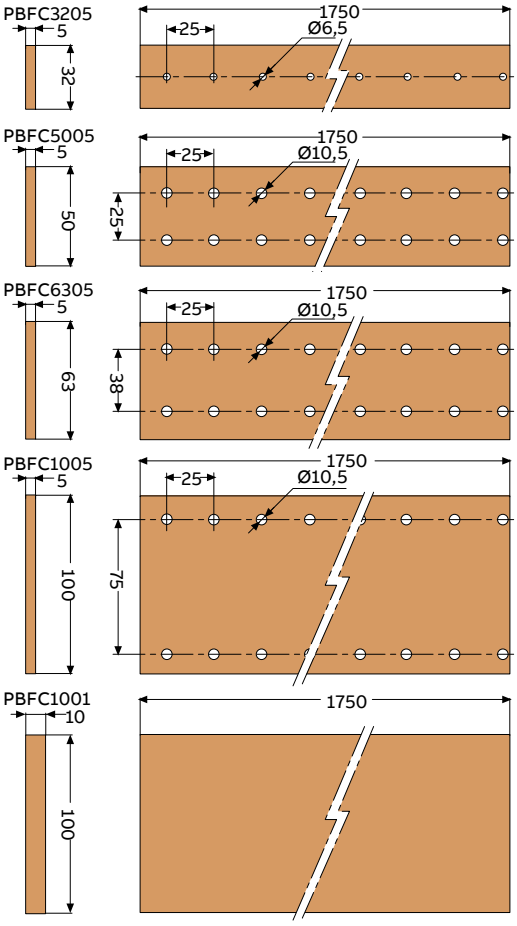


#### Insulators for busbars up to 1600A

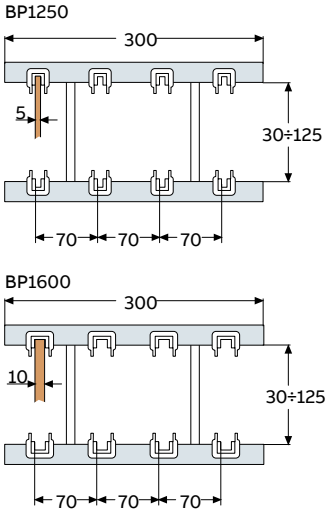


Measurements are in millimetres

# Overall dimensions
## Single plinth

### Single plinth

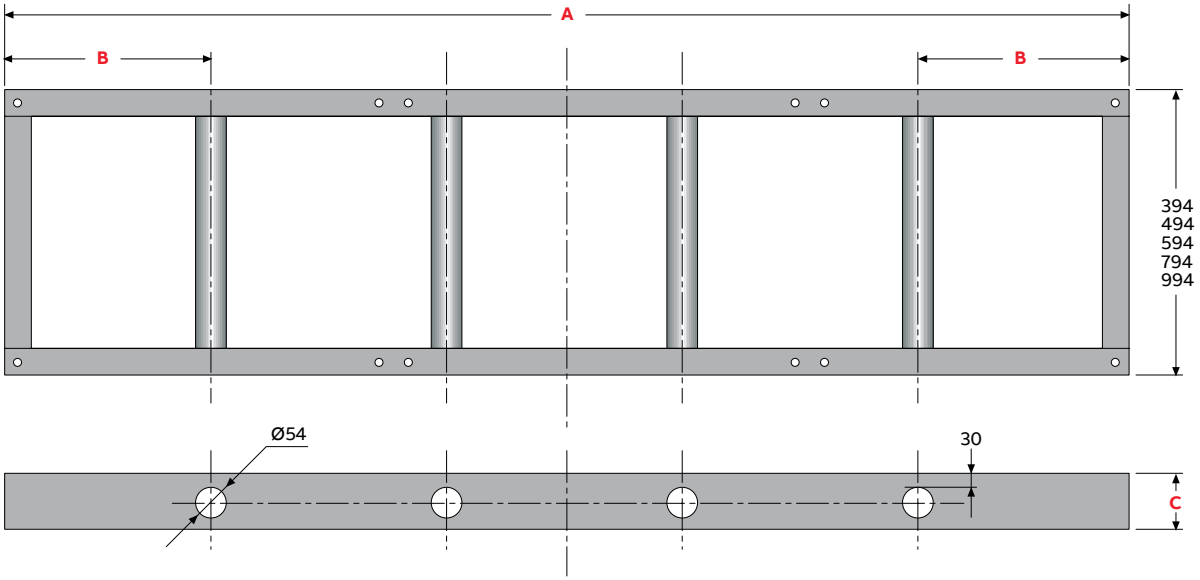


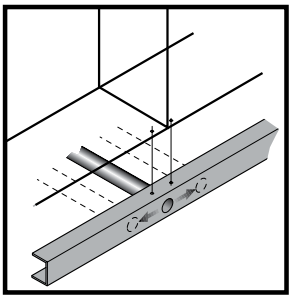

Should the reinforcement tube be in correspondence with switchgear fixing to the plinth, it will be moved at the execution stage.

| Reinforcement tube [No.] | A [metres] | B [mm] | C [mm] |
|---|---|---|---|
| 2 | 1.78 ÷ 2.78 | 665 | 100/200 |
| 2 | 2.78,1 ÷ 3.78 | 865 | 100/200 |
| 3 | 3.78,1 ÷ 4.78 | 950 | 100/200 |
| 4 | 4.78,1 ÷ 5.78 | 1195 | 100/200 |

Unit of measurement for the order: metre

### Lifting beams

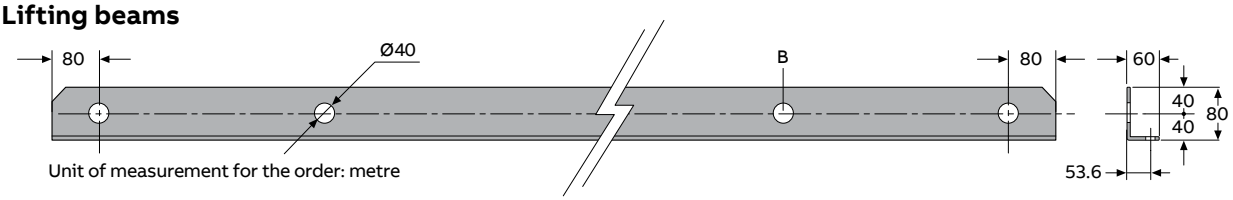


Unit of measurement for the order: metre

The holes for lifting are positioned in correspondence with the side-by-side position of the switchgear.
The amount of B holes in the beam is equal to the number of structures + 1.

Example: No. 5 structures side by side = No. 6 holes for lifting.

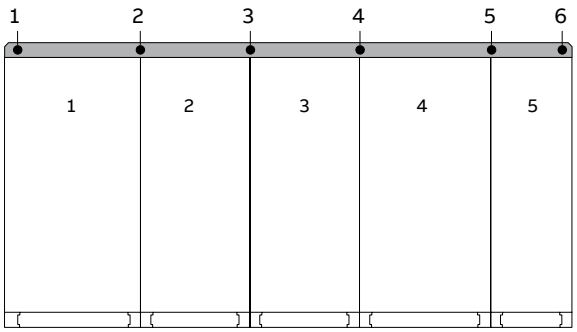


Measurements are in millimetres

# Overall dimensions
## Wiring ducts

### Thermoplastic and halogen free wiring ducts with 4/6 mm slots

CEI 23-22 Standard applies to plastic wiring ducts and their accessories to be used in the mechanical protection and support of cables in switchboards, in applications with a maximum rated voltage of 1000 V in alternating current and 1500 V in direct current.
Thermoplastic wiring ducts have obtained the IMQ certification.

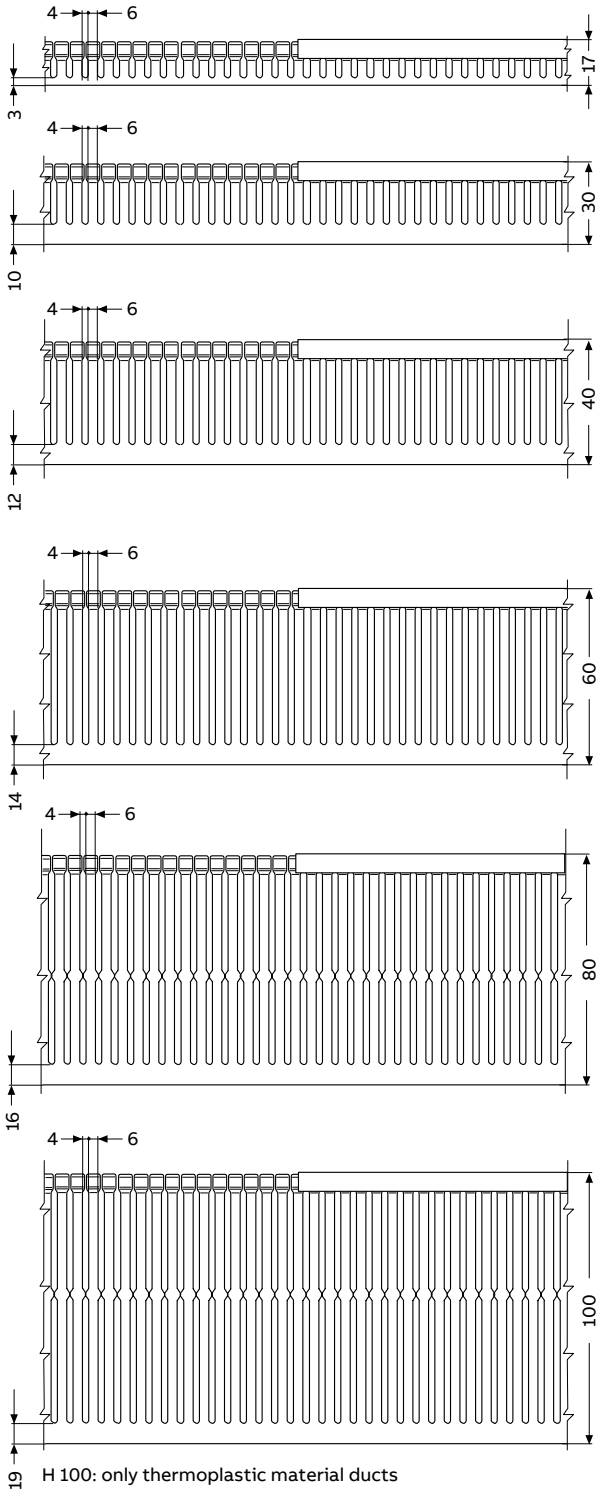


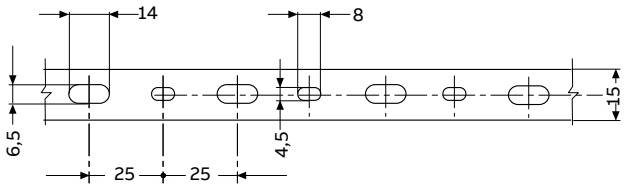


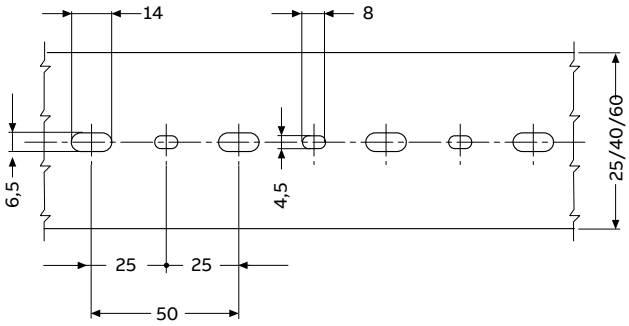


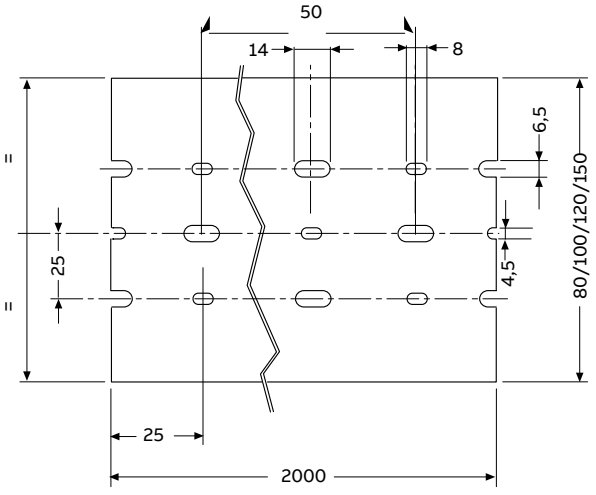


H 100: only thermoplastic material ducts

Measurements are in millimetres

# Overall dimensions

## Wiring ducts

### Thermoplastic and halogen free wiring duct with 8/12 mm slot

CEI 23-22 Standard applies to plastic wiring ducts and their accessories to be used in the mechanical protection and support of cables in switchboards, in applications with a maximum rated voltage of 1000 V in alternating current and 1500 V in direct current.
Thermoplastic wiring ducts have obtained the IMQ certification.

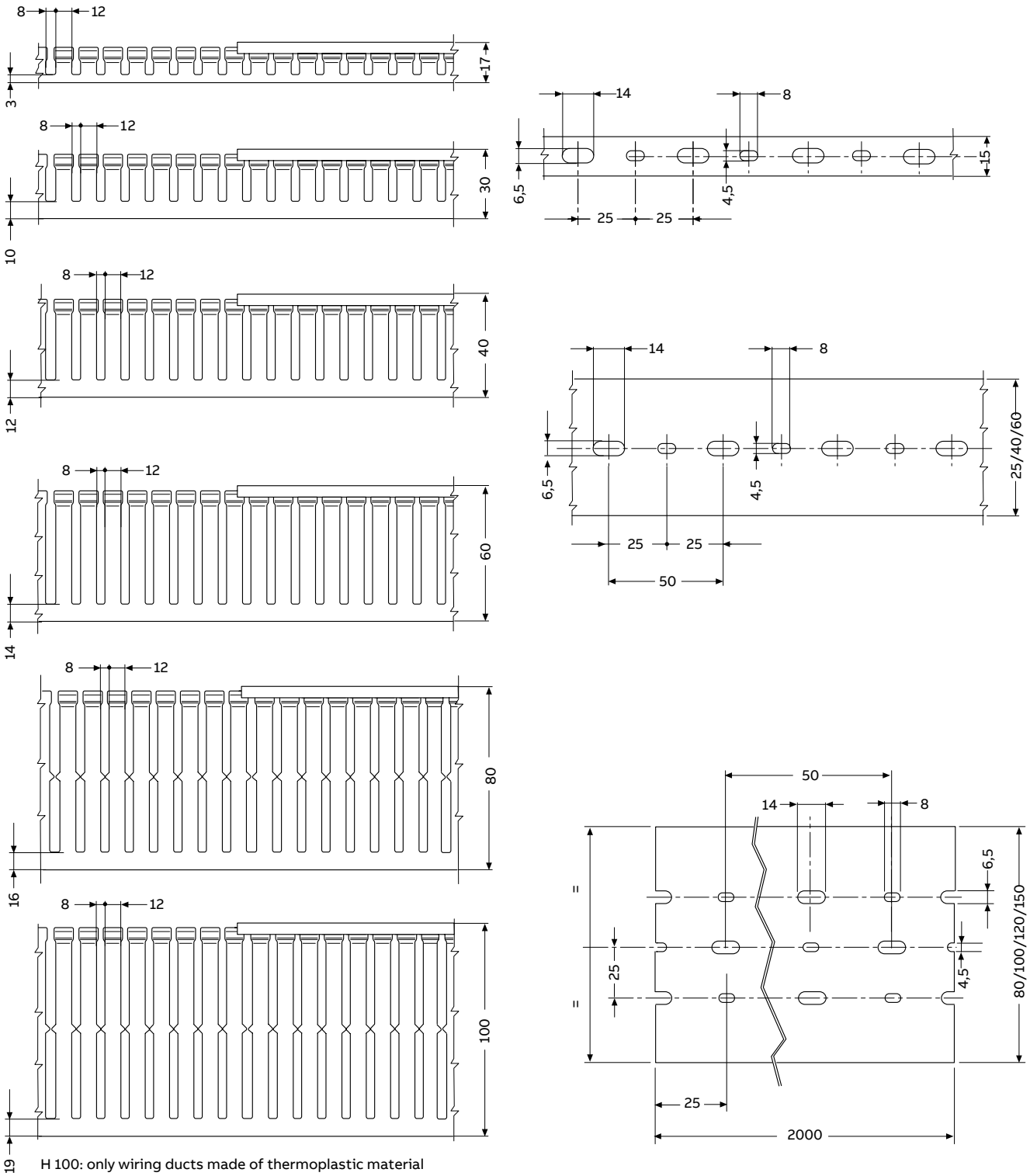


H 100: only wiring ducts made of thermoplastic material

Measurements are in millimetres

# Overall dimensions
Wiring ducts

## Ducts with round holes

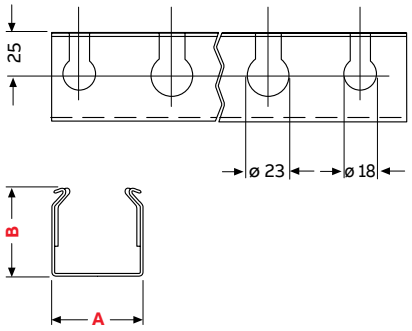


| Code | A | B |
|---|---|---|
| 05 330 | 50 | 50 |
| 05 331 | 100 | 60 |

## Plastic rivets and wiring duct bases

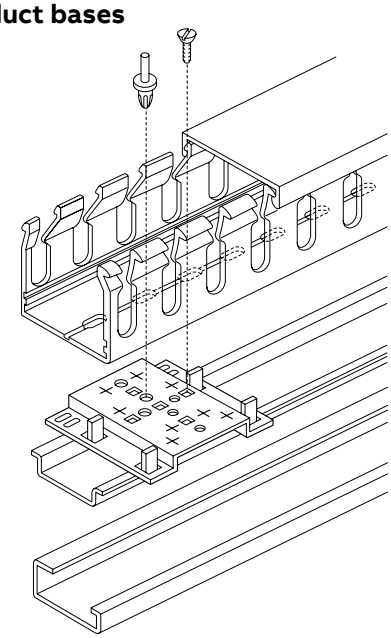

Code
05 214 - 05 216 - 05 210

## Plastic cable retainers

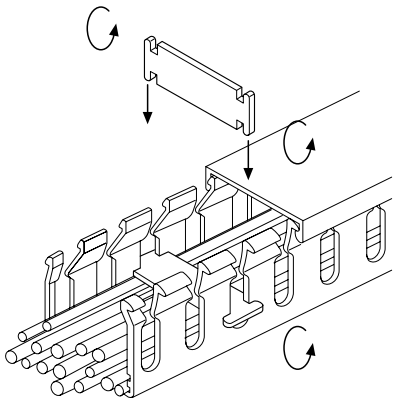

Code
05 224 - 05 226 - 05 228 - 05 230

## Plastic label tag

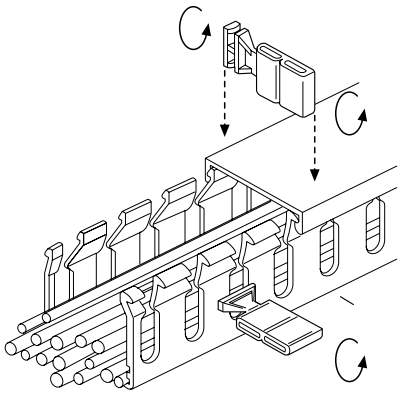

Code
05 240

Measurements are in millimetres

# Overall dimensions

## Wiring ducts

### Clip for wiring ducts
base 25

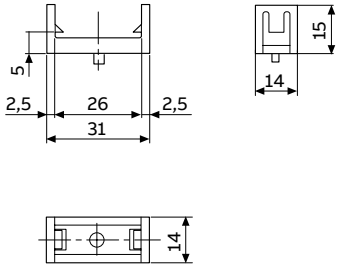


| Code |
|---|
| 05 250 |

### Clip for wiring ducts
base 40

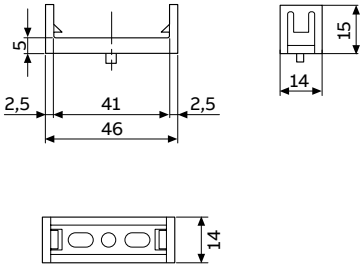


| Code |
|---|
| 05 252 |

### Clip for wiring ducts
base 60

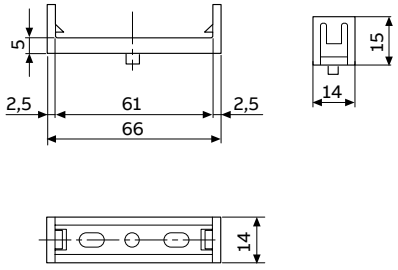


| Code |
|---|
| 05 254 |

### Clip for wiring ducts
base 80

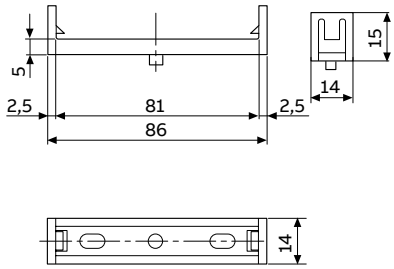


| Code |
|---|
| 05 256 |

### Clip for wiring ducts
base 100

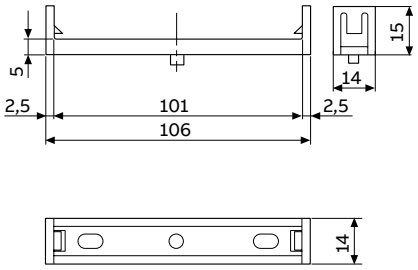


| Code |
|---|
| 05 258 |

### Clip for wiring ducts
base 120

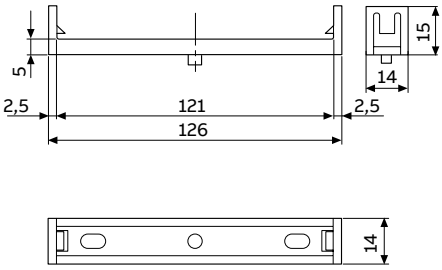


| Code |
|---|
| 05 260 |

### Clip for wiring ducts
base 150

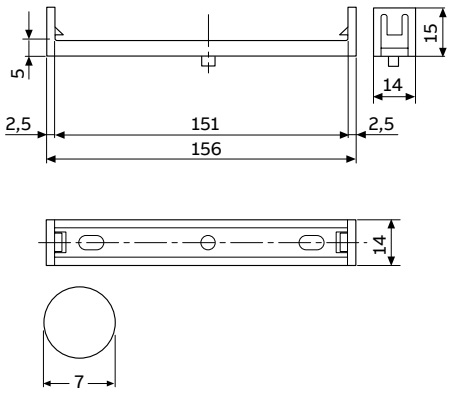


| Code |
|---|
| 05 262 |

Measurements are in millimetres

# Overall dimensions
## Aeration/ventilation

### Gratings

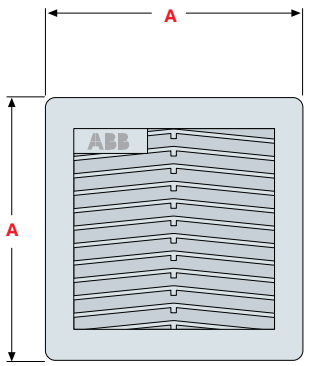


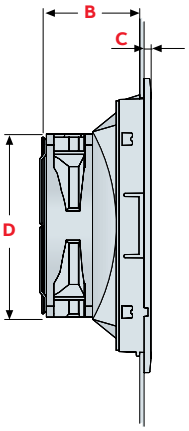


| Code | A | B | C | D | E | F |
|---|---|---|---|---|---|---|
| EN0105K<br>EN1105K<br>EN2105K | 105 | 60 | 7 | 80 | 95 | 92 |
| EN0150K<br>EN1150K<br>EN2150K | 150 | 64 | 7 | 124 | 131 | 125 |
| EN0204K<br>EN1204K<br>EN2204K | 204 | 90 | 8 | 127 | 185 | 177 |
| EN0250K<br>EN1250K<br>EN2250K | 250 | 113 | 8 | 172 | 230 | 223 |
| EN0325K | 325 | 24 | 9 | 255 | 302 | 291 |
| EN2325K<br>EN3325K | 325 | 152 | 9 | 218 | 302 | 291 |

Drilling template

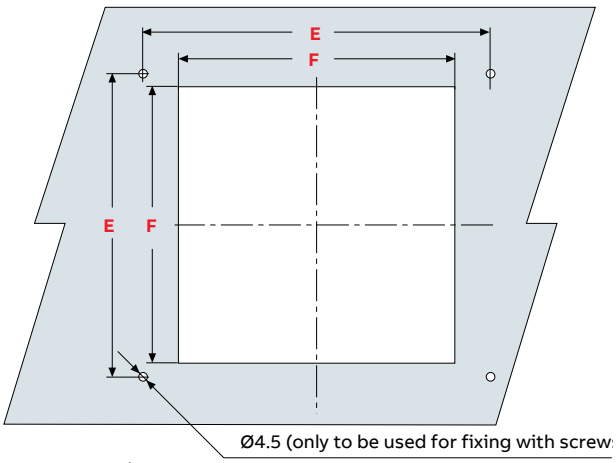


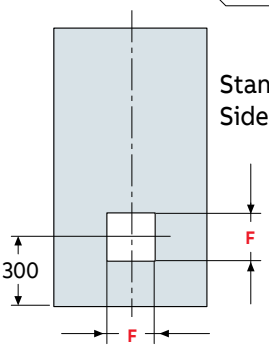


Standard position of drillings
Side panel/Door

### Hood

EN0480K-EN0481K-EN0482K

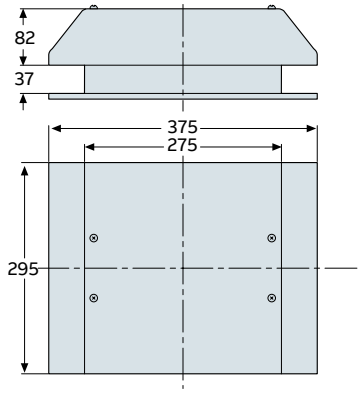


Drilling template

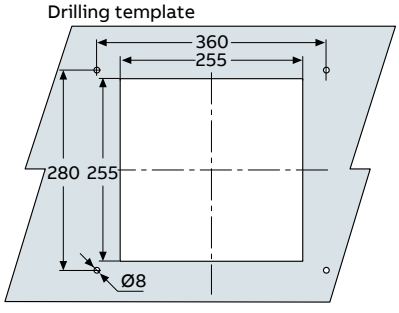


EN0483K-EN0484K-EN0485K

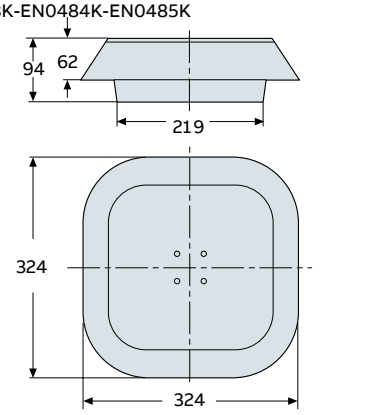


Drilling template

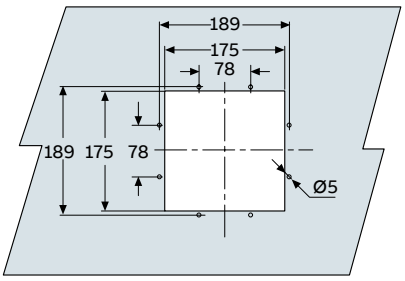


Measurements are in millimetres

# Overall dimensions

## Aeration/ventilation

### Ventilation roof module

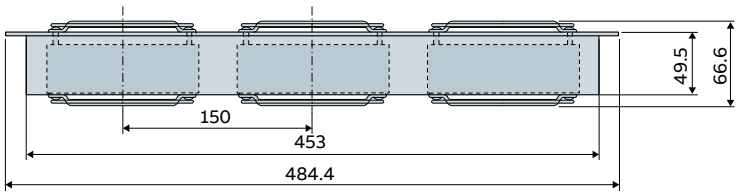


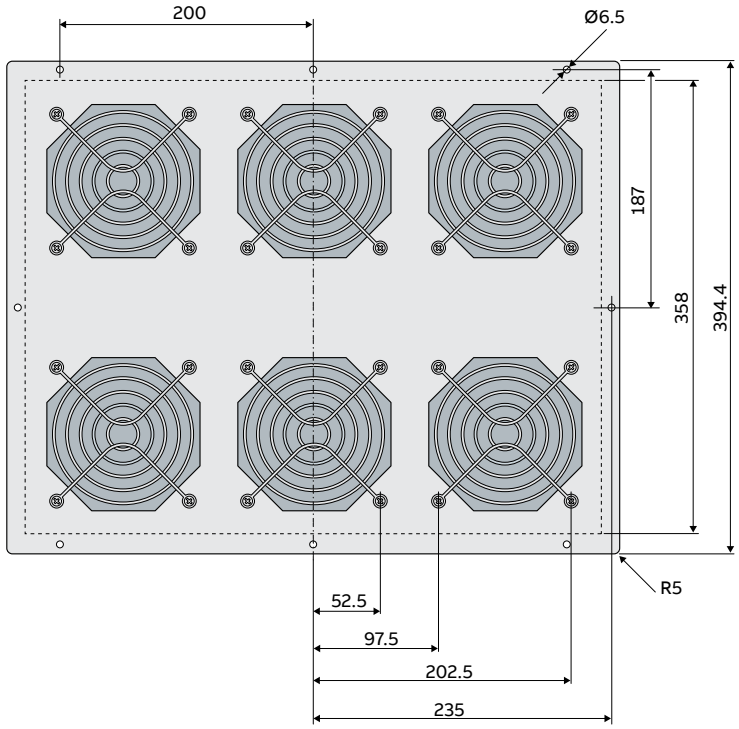


Drilling template

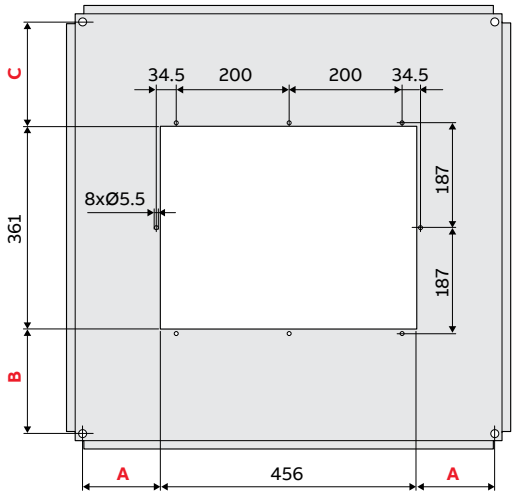


| Roof WxDmm | Fix rack frame | Swing rack frame | A | B | C |
|---|---|---|---|---|---|
| 600X600 | ■ | - | 38 | 85.5 | 85.5 |
| 600X800 | ■ | - | 38 | 185.5 | 185.5 |
| 600X1000 | ■ | - | 38 | 285.5 | 285.5 |
| 800X600 | ■ | ■ | 138 | 32 | 139 |
| 800X600 | ■ | - | 138 | 85.5 | 85.5 |
| 800X800 | ■ | ■ | 138 | 185.5 | 185.5 |
| 800X1000 | ■ | ■ | 138 | 285.5 | 285.5 |



Measurements are in millimetres

# Overall dimensions
## Air conditioner

### Air conditioners for wall or door mounting VZ1550K - VZ1850K - VZ1400K

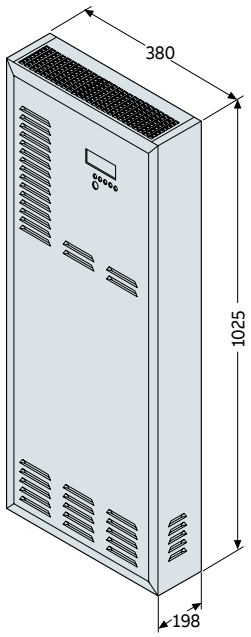


Drilling template

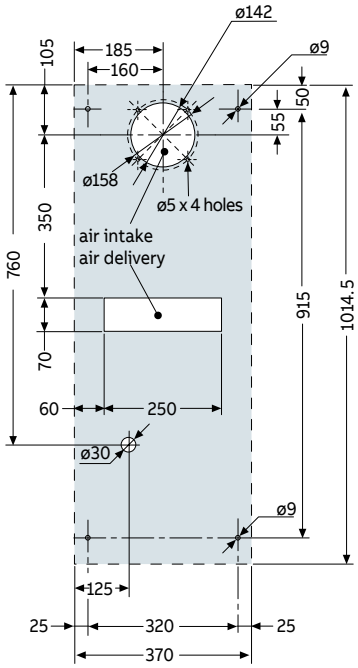


### Air conditioners for wall or door mounting VZ2000K

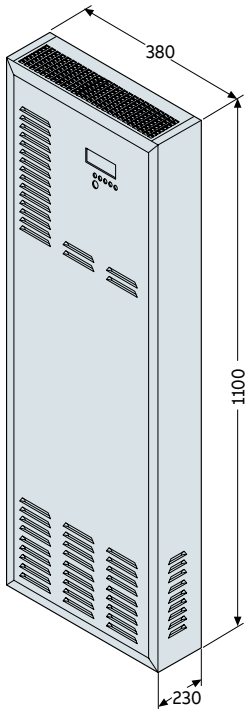


Drilling template

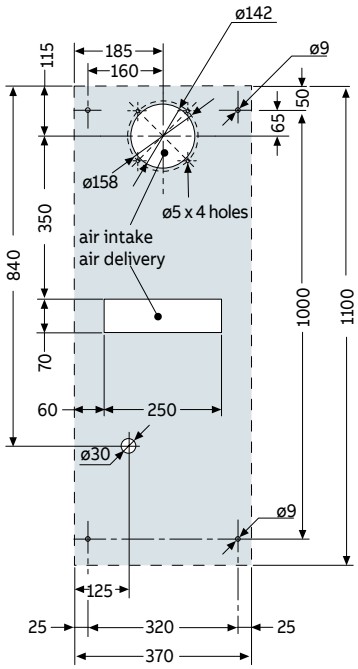


Measurements are in millimetres

# Overall dimensions

Air conditioner

## Heat exchangers for wall or door mounting VS4235K

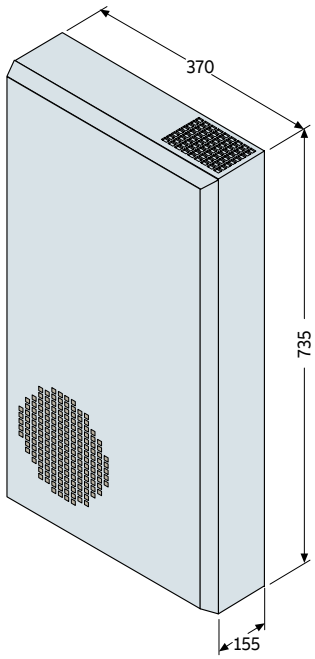


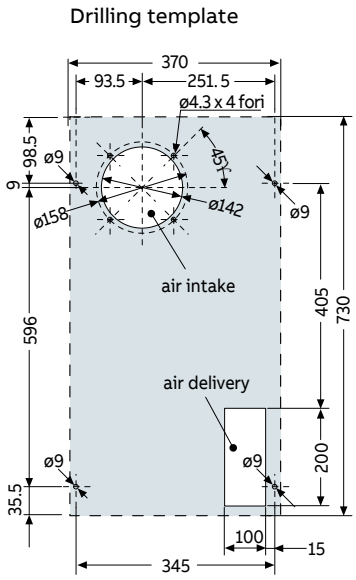


## Heat exchangers for wall or door mounting VS6285K

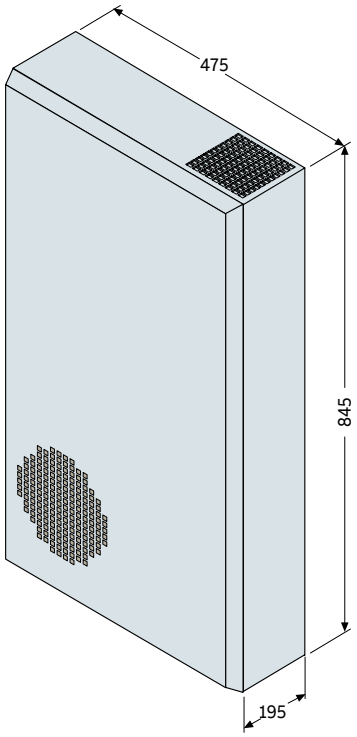


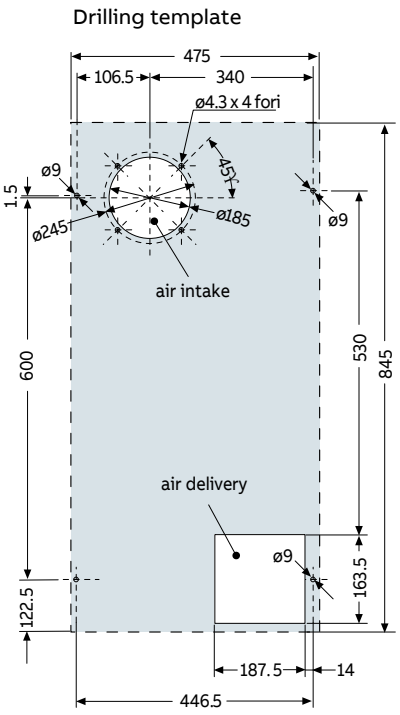


Measurements are in millimetres

# Overall dimensions

Air conditioner

## Air conditioners for mounting on roof VZ8501K-VZ1401K

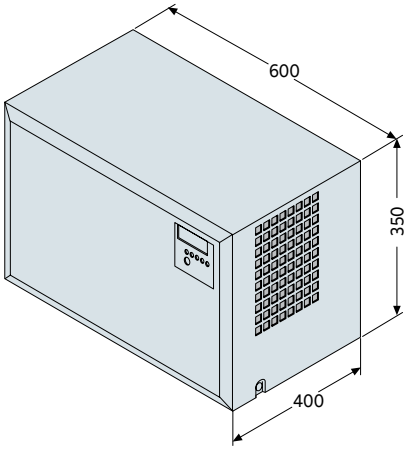


Drilling template

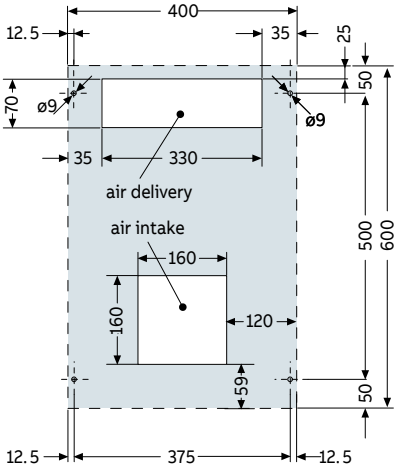


## IP20 heaters

VA7930 / VA7950 / VA7975

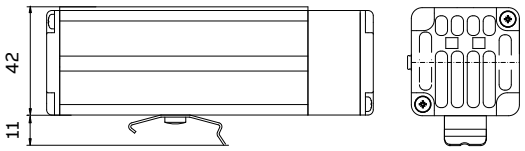


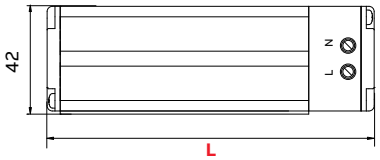


| | L (mm) |
|---|---|
| VA7930 | 125 |
| VA7950 | 150 |
| VA7975 | 150 |

VA7910

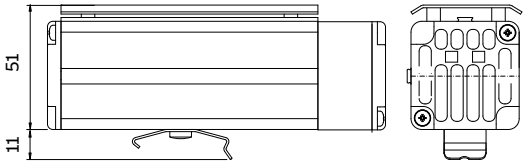


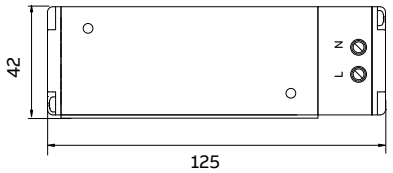


VA7915

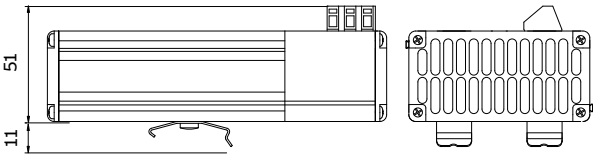


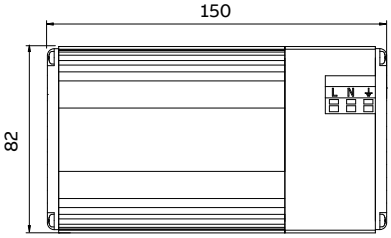


VA8300

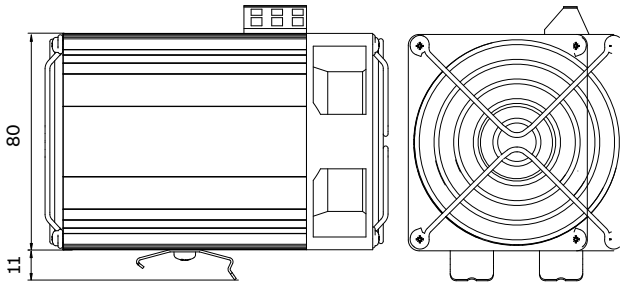


Minimum mounting distances

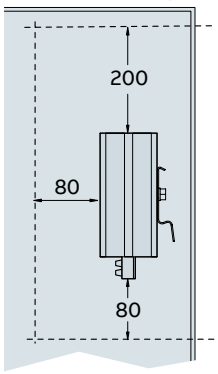


Measurements are in millimetres

# Overall dimensions
## Drillings

### Drillings SR2

Custom Made Service

Maximum useful overall dimensions for the drillings

Flanges

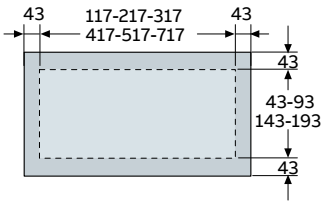


Side

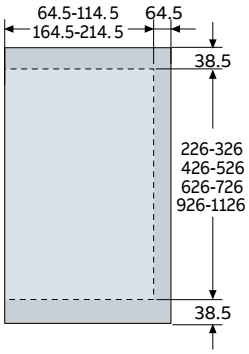


Doors H=300-400-500

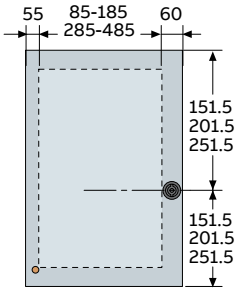


Doors H=600-700-800

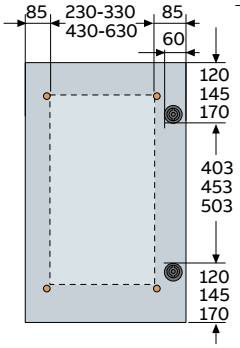


Doors H=1000-1200

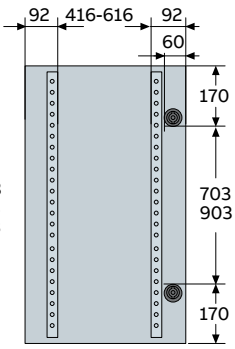


### IS2 Enclosure drillings

Custom Made Service

Maximum useful overall dimensions for the drillings

Roof

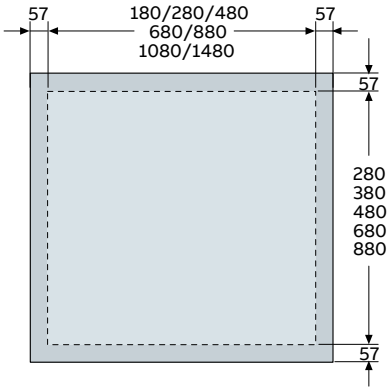


Doors W ≤ 500mm / panels

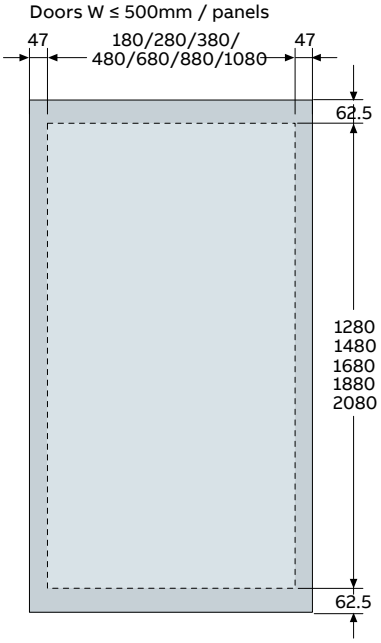


Doors W ≥ 600mm

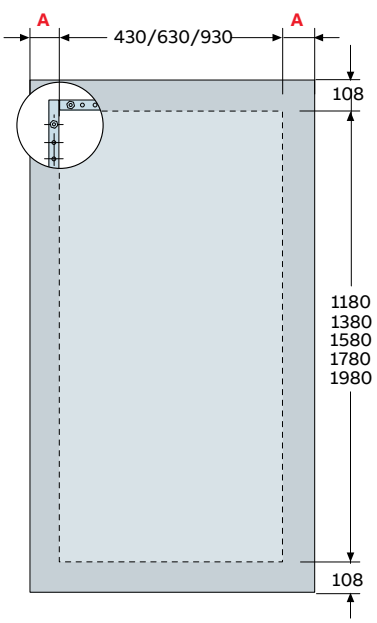


| | A |
|---|---|
| Front door | 75 |
| Side door | 118.5 |

### Roof/door/panel finning

Attach the drawing with No. rows and No. of fins per row to the order.

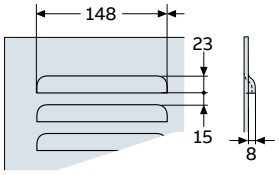


Aeration surface for 8 $cm^2$ fin.
For request of finning it's necessary manage it with special offer

Measurements are in millimetres

# Overall dimensions
## Accessories

### Aluminium section EV1050

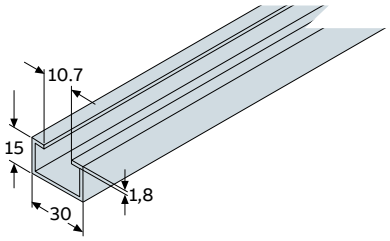


### Aluminium nuts for EV1050

EV1056

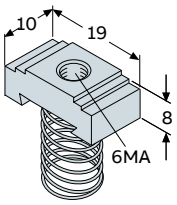


EV1058

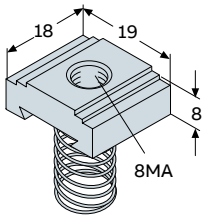


### Angles for busbars EV1051

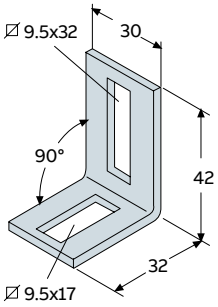


### Brackets for cables EV1090 / EV1091

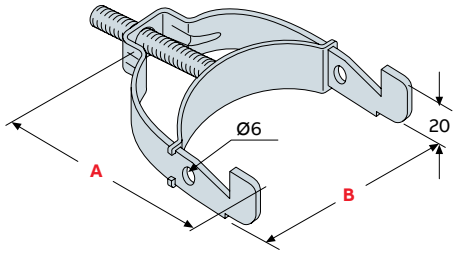


| | A | B |
|---|---|---|
| EV1090 | 49 | 20 |
| EV1091 | 65 | 36 |
| EV1092 | 85 | 51 |
| EV1093 | 106 | 80 |

### Terminal box supports

EV1110-EV2110-EV1113

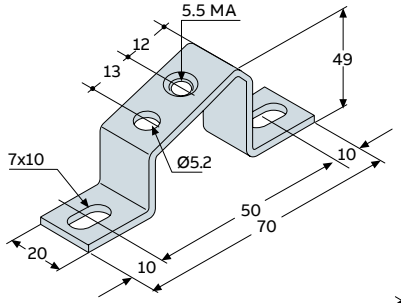


EV1111

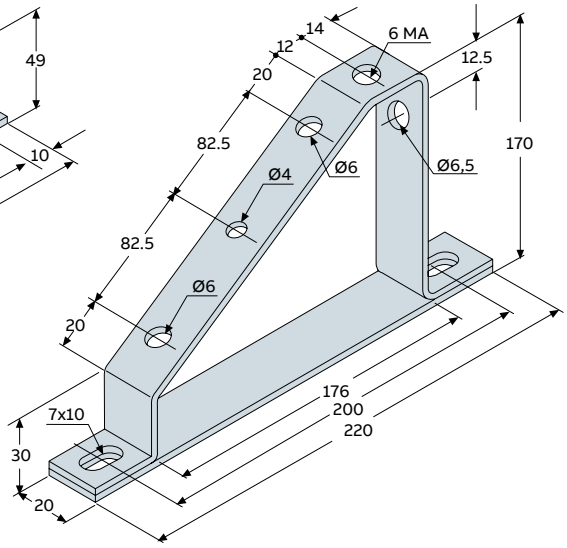


EV1112-EV2112

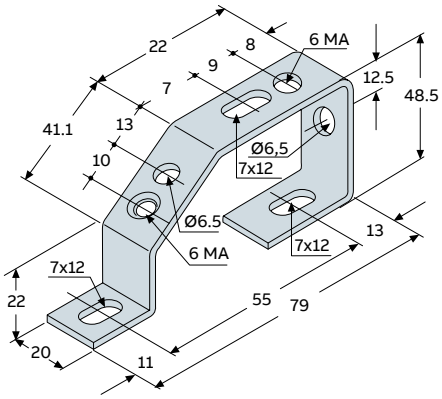


Measurements are in millimetres

# Overall dimensions

Accessories

## Voltage indicator

EV1147

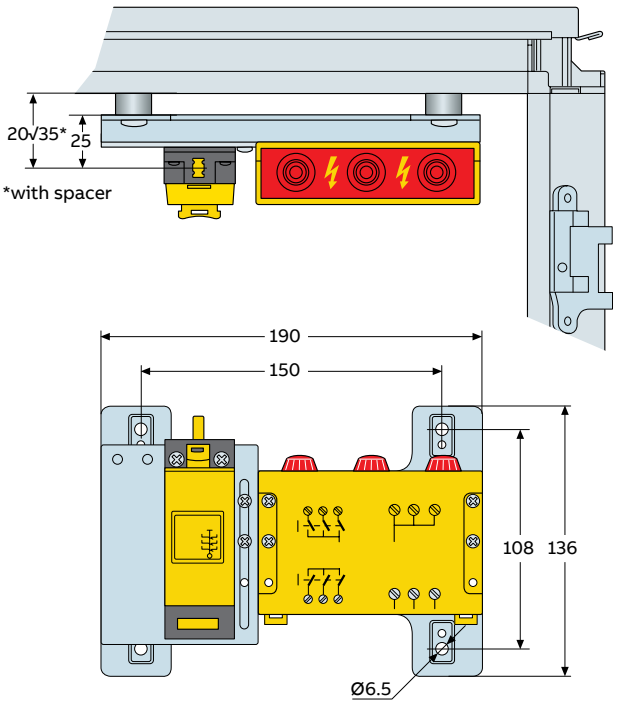


EV1148

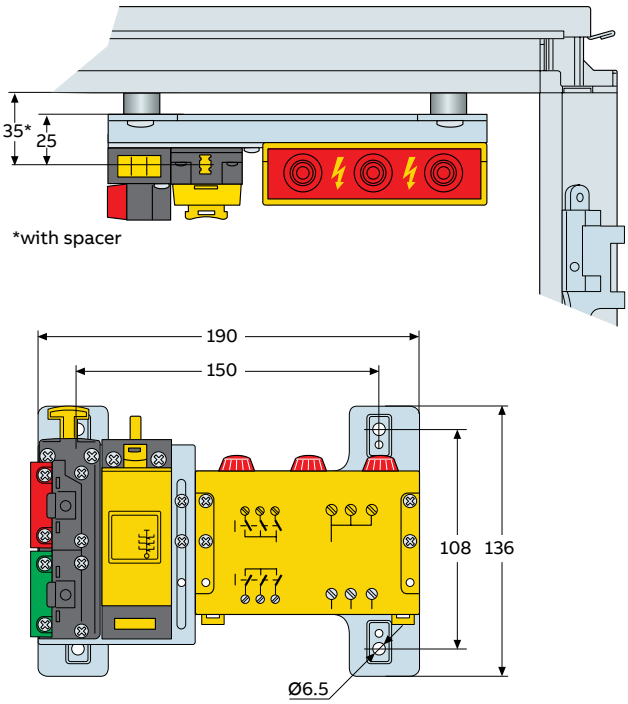


## Fluorescent lights

EV1040 - EV1001

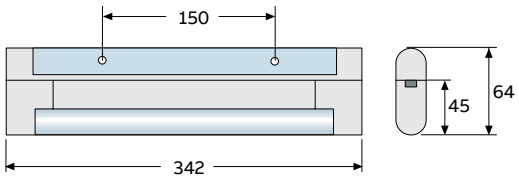


EV1043

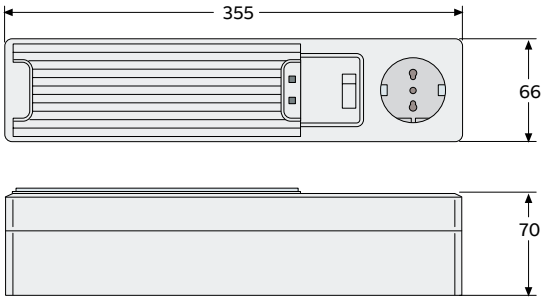


EV1041 - EV1002

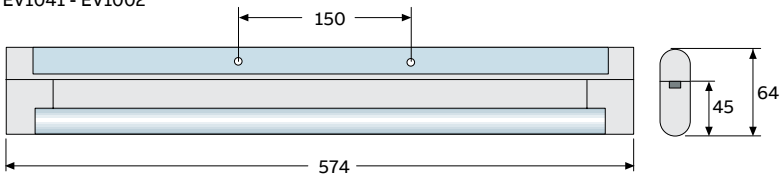


EV1048

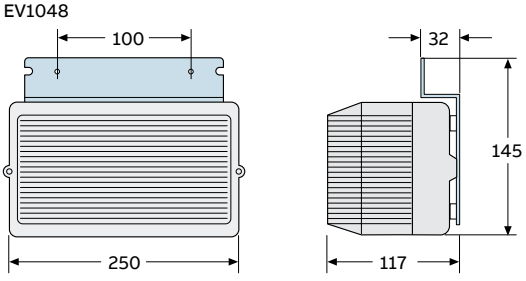


Measurements are in millimetres

# Overall dimensions

## Accessories

### IP20 protective window with frame

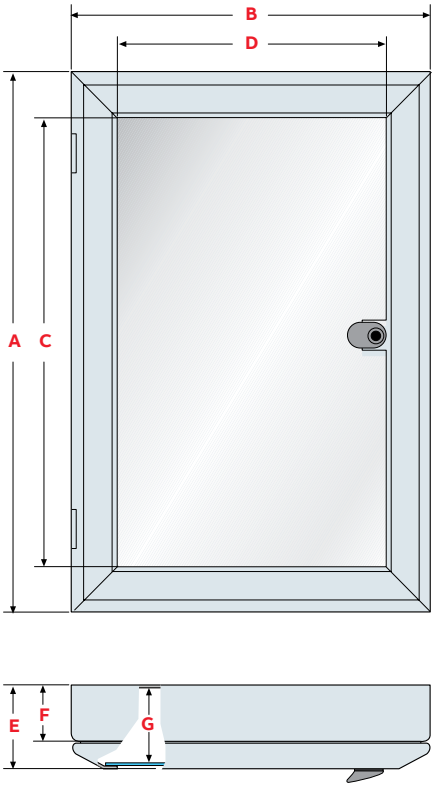


| | A | B | C | D | E | F | G |
|---|---|---|---|---|---|---|---|
| EV1081 | 400 | 400 | 330 | 330 | 79 | 61 | 70 |
| EV1082 | 600 | 200 | 530 | 130 | 48 | 30 | 40 |
| EV1083 | 600 | 200 | 530 | 130 | 79 | 61 | 70 |
| EV1085 | 600 | 400 | 530 | 330 | 79 | 61 | 70 |
| EV1087 | 600 | 600 | 530 | 530 | 79 | 61 | 70 |

### IP54 protective window without frame

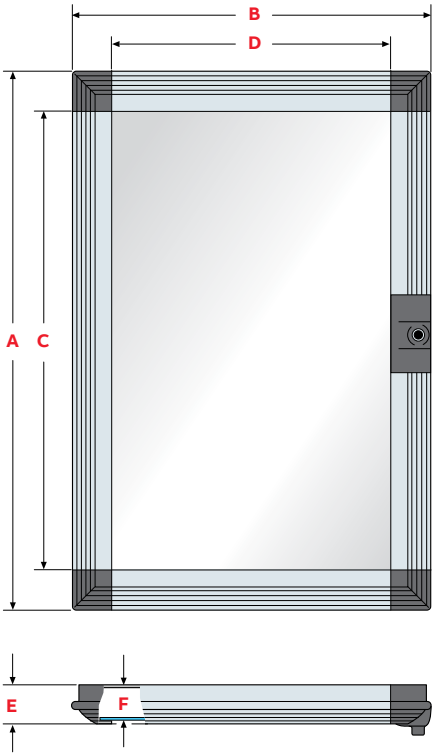


| | A | B | C | D | E | F |
|---|---|---|---|---|---|---|
| EV8880 | 400 | 400 | 303 | 303 | 26 | 15 |
| EV8881 | 600 | 600 | 503 | 503 | 26 | 15 |
| EV8882 | 600 | 400 | 503 | 303 | 26 | 15 |

Measurements are in millimetres

# Chapter 6
List of codes

**6**–2 **IS2 - IS2 EMC enclosures**

**6**–15 **Wiring ducts**

# List of codes

## IS2 - IS2 EMC enclosures

| Oder code | Page | Weight Kg |
|---|---|---|
| 06652 | 2-95 | 12,00 |
| 07241 | 2-94 | 27,36 |
| 07242 | 2-94 | 33,46 |
| 07243 | 2-94 | 44,16 |
| 07244 | 2-94 | 41,76 |
| 07245 | 2-94 | 61,00 |
| 07246 | 2-94 | 83,70 |
| 07247 | 2-94 | 81,84 |
| 07855 | 2-95 | 14,00 |
| 1SL9037A00 | 2-94 | 19,39 |
| 1SL9816A00 | 2-94 | 18,12 |
| 1SL9817A00 | 2-94 | 18,84 |
| 1SL9818A00 | 2-94 | 23,28 |
| 1SL9819A00 | 2-94 | 13,80 |
| 1SL9820A00 | 2-94 | 18,19 |
| 1SL9836A00 | 2-94 | 24,79 |
| 1SL9838A00 | 2-94 | 30,00 |
| 1SL9839A00 | 2-94 | 17,16 |
| 1SL9840A00 | 2-94 | 21,54 |
| 1SL9841A00 | 2-94 | 14,64 |
| 1SL9842A00 | 2-94 | 17,10 |
| 1SL9860A00 | 2-94 | 26,26 |
| 1SL9861A00 | 2-94 | 27,02 |
| 1SL9862A00 | 2-94 | 15,72 |
| 1SL9863A00 | 2-94 | 17,88 |
| 1SL9864A00 | 2-94 | 11,14 |
| 1SL9865A00 | 2-94 | 15,00 |
| 1SL9866A00 | 2-94 | 17,46 |
| 1SL9880A00 | 2-95 | 48,60 |
| 1SL9886A00 | 2-95 | 2,20 |
| 1SL9887A00 | 2-95 | 2,80 |
| 1SL9893A00 | 2-95 | 0,50 |
| 1SL9904A00 | 2-95 | 6,18 |
| 1SL9907A00 | 2-95 | 0,19 |
| 1SL9910A00 | 2-95 | 2,27 |
| 1SL9911A00 | 2-95 | 3,03 |
| 1SL9912A00 | 2-95 | 3,79 |
| 1SL9913A00 | 2-95 | 5,31 |
| 1SL9914A00 | 2-95 | 6,82 |
| 1SL9915A00 | 2-95 | 8,34 |
| 1STQ005317B0000 | 2-46 | |
| 1STQ005318B0000 | 2-46 | |
| 1STQ005319B0000 | 2-46 | |
| 1STQ005320B0000 | 2-52 | |
| 1STQ005321B0000 | 2-51 | |
| 1STQ005322B0000 | 2-53 | |
| 1STQ005323B0000 | 2-53 | |
| 1STQ005324B0000 | 2-53 | |
| 1STQ005325B0000 | 2-53 | |
| 1STQ005328B0000 | 2-49 | 13,25 |

| Oder code | Page | Weight Kg |
|---|---|---|
| 1STQ005329B0000 | 2-49 | 16,25 |
| 1STQ005329B0000 | 2-49 | 16,25 |
| 1STQ005330B0000 | 2-49 | 14,25 |
| 1STQ005331B0000 | 2-49 | 17,25 |
| 1STQ005332B0000 | 2-84 | 5,38 |
| 1STQ005333B0000 | 2-84 | 6,38 |
| 1STQ005334B0000 | 2-111 | |
| 1STQ005346B0000 | 2-32 | 56,00 |
| 1STQ005347B0000 | 2-32 | 66,00 |
| 1STQ005348B0000 | 2-32 | 72,00 |
| 1STQ005349B0000 | 2-32 | 55,00 |
| 1STQ005350B0000 | 2-32 | 53,00 |
| 1STQ005351B0000 | 2-32 | 69,00 |
| 1STQ005352B0000 | 2-32 | 75,00 |
| 1STQ005353B0000 | 2-34 | 81,02 |
| 1STQ005354B0000 | 2-37 | 57,97 |
| 1STQ005355B0000 | 2-37 | 54,06 |
| 1STQ005356B0000 | 2-37 | 63,57 |
| 1STQ005357B0000 | 2-32 | 58,16 |
| 1STQ005358B0000 | 2-32 | 67,77 |
| 1STQ005359B0000 | 2-32 | 77,93 |
| 1STQ005360B0000 | 2-34 | 87,49 |
| 1STQ005361B0000 | 2-32 | 56,00 |
| 1STQ005362B0000 | 2-32 | 62,16 |
| 1STQ005363B0000 | 2-32 | 69,77 |
| 1STQ005364B0000 | 2-34 | 93,49 |
| 1STQ005365B0000 | 2-32 | 58,00 |
| 1STQ005366B0000 | 2-32 | 68,16 |
| 1STQ005367B0000 | 2-32 | 72,77 |
| 1STQ005368B0000 | 2-34 | 98,49 |
| 1STQ005369B0000 | 2-32 | 52,98 |
| 1STQ005370B0000 | 2-32 | 74,00 |
| 1STQ005371B0000 | 2-32 | 69,00 |
| 1STQ005372B0000 | 2-32 | 77,00 |
| 1STQ005373B0000 | 2-32 | 86,00 |
| 1STQ005374B0000 | 2-34 | 89,53 |
| 1STQ005375B0000 | 2-37 | 59,82 |
| 1STQ005376B0000 | 2-37 | 70,32 |
| 1STQ005377B0000 | 2-32 | 75,00 |
| 1STQ005378B0000 | 2-32 | 64,25 |
| 1STQ005379B0000 | 2-32 | 81,00 |
| 1STQ005380B0000 | 2-32 | 85,98 |
| 1STQ005381B0000 | 2-34 | 96,47 |
| 1STQ005382B0000 | 2-32 | 82,00 |
| 1STQ005383B0000 | 2-32 | 74,25 |
| 1STQ005384B0000 | 2-32 | 84,25 |
| 1STQ005385B0000 | 2-32 | 92,00 |
| 1STQ005386B0000 | 2-34 | 99,47 |
| 1STQ005387B0000 | 2-32 | 77,00 |
| 1STQ005388B0000 | 2-32 | 84,25 |

| Oder code | Page | Weight Kg |
|---|---|---|
| 1STQ005389B0000 | 2-32 | 87,25 |
| 1STQ005390B0000 | 2-32 | 89,00 |
| 1STQ005391B0000 | 2-34 | 100,47 |
| 1STQ005392B0000 | 2-32 | 86,00 |
| 1STQ005393B0000 | 2-32 | 92,00 |
| 1STQ005394B0000 | 2-32 | 89,00 |
| 1STQ005395B0000 | 2-32 | 97,00 |
| 1STQ005426B0000 | 2-56 | |
| 1STQ005427B0000 | 2-56 | |
| 1STQ005428B0000 | 2-56 | |
| 1STQ006248B0000 | | 28,2 |
| 1STQ006249B0000 | | 31,5 |
| 1STQ006250B0000 | | 34,8 |
| 1STQ006251B0000 | | 6,8 |
| AA1560 | 2-106 | 0,02 |
| AA1570 | 2-106 | 0,03 |
| AA6100 | 2-106 | 0,01 |
| AA6100 | 2-113 | 0,01 |
| AA6120 | 2-106 | 0,01 |
| AA6140 | 2-106 | 0,01 |
| AA6141 | 2-106 | 0,02 |
| AA6160 | 2-106 | 0,02 |
| AA6180 | 2-106 | 0,02 |
| AA6190 | 2-106 | 0,02 |
| AA6200 | 2-106 | 0,02 |
| AA6840 | 2-92 | 0,01 |
| AA6850 | 2-92 | 0,01 |
| AA6880 | 2-92 | 0,01 |
| AA6890 | 2-92 | 0,01 |
| AA8004 | 2-106 | 0,01 |
| AA9610 | 2-111 | 0,67 |
| AD1009 | 2-78 | 0,09 |
| AD1033 | 2-92 | 0,22 |
| AD1033 | 2-115 | 0,22 |
| AD1036 | 2-115 | 0,07 |
| AD1037 | 2-78 | 0,35 |
| AD1056 | 2-90 | 0,30 |
| AD1058 | 2-106 | 0,01 |
| AD1058 | 2-113 | 0,01 |
| AD1064 | 2-90 | 0,26 |
| AD1065 | 2-90 | 0,20 |
| AD1066 | 2-90 | 0,10 |
| AD1067 | 2-90 | 0,20 |
| AD1068 | 2-90 | 1,07 |
| AD1069 | 2-90 | 2,40 |
| AD1077 | 2-90 | 1,05 |
| AD1086 | 2-82 | 3,51 |
| AD1088 | 2-82 | 1,41 |
| AD1089 | 2-82 | 2,08 |
| AD1101 | 2-82 | 0,05 |

# List of codes

## IS2 - IS2 EMC enclosures

| Oder code | Page | Weight Kg |
|---|---|---|
| AD1102 | 2-82 | 0,02 |
| AD1103 | 2-82 | 0,02 |
| AD1104 | 2-82 | 0,02 |
| AD1600 | 2-82 | 0,24 |
| AD1800 | 2-82 | 0,36 |
| AD3301 | 2-81 | 0,15 |
| AD3302 | 2-81 | 0,15 |
| AD3303 | 2-81 | 0,15 |
| AD3304 | 2-81 | 0,15 |
| AE1015 | 2-103 | 0,25 |
| AP6000 | 2-78 | 0,01 |
| AS0001 | 2-109 | 2,50 |
| BA0400 | 2-90 | 3,30 |
| BA0800 | 2-90 | 4,50 |
| BA1250 | 2-90 | 9,16 |
| BA1600 | 2-90 | 10,72 |
| BF1602 | 2-91 | 2,70 |
| BF2502 | 2-91 | 4,20 |
| BF4002 | 2-91 | 3,00 |
| BF4012 | 2-91 | 6,50 |
| BF6302 | 2-91 | 12,50 |
| BF8002 | 2-91 | 19,10 |
| BP0630 | 2-91 | 0,40 |
| BP0632 | 2-91 | 0,55 |
| BP1250 | 2-91 | 2,80 |
| BP1600 | 2-91 | 2,60 |
| BR0250 | 2-91 | - |
| BR0400 | 2-91 | 2,80 |
| BR0630 | 2-91 | 6,20 |
| CR0180M | 2-111 | 1,10 |
| CR0181 | 2-111 | 1,10 |
| EA0018 | 2-64 | 20,00 |
| EA0020 | 2-64 | 2,78 |
| EA0022 | 2-64 | 3,01 |
| EA0400 | 2-62 | 1,78 |
| EA0401 | 2-115 | 1,12 |
| EA0501 | 2-115 | 1,52 |
| EA0600 | 2-62 | 2,60 |
| EA0601 | 2-115 | 1,91 |
| EA0801 | 2-115 | 2,71 |
| EA0802 | 2-62 | 3,39 |
| EA1000 | 2-62 | 4,20 |
| EA1001 | 2-115 | 3,38 |
| EA1002 | 2-65 | 2,82 |
| EA1003 | 2-63 | 2,53 |
| EA1061 | 2-66 | 11,60 |
| EA1081 | 2-66 | 20,79 |
| EA1200 | 2-62 | 4,99 |
| EA1202 | 2-65 | 3,41 |
| EA1203 | 2-63 | 3,12 |
| EA1411 | 2-61 | |
| EA1412 | 2-61 | 31,81 |
| EA1440 | 2-61 | 9,14 |
| EA1460 | 2-61 | 16,36 |
| EA1480 | 2-61 | 21,51 |
| EA1512 | 2-65 | 31,34 |
| EA1540 | 2-65 | 18,84 |
| EA1560 | 2-65 | 23,99 |
| EA1580 | 2-65 | 29,14 |
| EA1602 | 2-62 | 6,66 |
| EA1603 | 2-63 | 4,27 |
| EA1610 | 2-61 | 30,54 |
| EA1612 | 2-61 | 36,47 |
| EA1616 | 2-61 | 18,67 |
| EA1619 | 2-61 | 24,60 |
| EA1640 | 2-61 | 6,99 |
| EA1710 | 2-65 | 38,57 |
| EA1712 | 2-65 | 45,68 |
| EA1740 | 2-65 | 17,20 |
| EA1760 | 2-65 | 22,02 |
| EA1780 | 2-65 | 31,44 |
| EA1800 | 2-61 | 7,17 |
| EA1810 | 2-61 | 35,75 |
| EA1812 | 2-61 | 42,99 |
| EA1817 | 2-61 | 57,32 |
| EA1841 | 2-61 | 13,91 |
| EA1860 | 2-61 | 20,40 |
| EA1860 | 2-126 | 20,40 |
| EA1860 | 2-126 | 20,40 |
| EA1880 | 2-61 | 26,00 |
| EA1910 | 2-65 | 44,24 |
| EA1912 | 2-65 | 52,40 |
| EA1916 | 2-65 | 77,74 |
| EA1940 | 2-65 | 19,32 |
| EA1960 | 2-65 | 27,90 |
| EA1981 | 2-65 | 35,34 |
| EA2000 | 2-61 | 7,97 |
| EA2000 | 2-127 | 7,97 |
| EA2000 | 2-128 | 7,97 |
| EA2010 | 2-61 | 39,72 |
| EA2010 | 2-133 | 39,72 |
| EA2013 | 2-61 | 47,77 |
| EA2013 | 2-128 | 47,77 |
| EA2013 | 2-133 | 47,77 |
| EA2016 | 2-61 | 63,69 |
| EA2016 | 2-128 | 63,69 |
| EA2040 | 2-61 | 15,45 |
| EA2060 | 2-61 | 22,60 |
| EA2060 | 2-126 | 22,60 |
| EA2060 | 2-127 | 22,60 |
| EA2060 | 2-132 | 22,60 |
| EA2062 | 2-66 | 2,97 |
| EA2080 | 2-61 | 30,80 |
| EA2080 | 2-127 | 30,80 |
| EA2080 | 2-128 | 30,80 |
| EA2080 | 2-132 | 30,80 |
| EA2081 | 2-66 | 3,96 |
| EA2100 | 2-61 | 1,06 |
| EA2101 | 2-66 | 0,28 |
| EA2102 | 2-61 | 0,09 |
| EA2110 | 2-65 | 48,17 |
| EA2110 | 2-132 | 48,17 |
| EA2112 | 2-65 | 57,06 |
| EA2113 | 2-65 | 0,15 |
| EA2115 | 2-63 | 0,13 |
| EA2116 | 2-65 | 86,38 |
| EA2117 | 2-61 | 0,48 |
| EA2117 | 2-63 | 0,48 |
| EA2118 | 2-62 | 0,48 |
| EA2140 | 2-65 | 21,90 |
| EA2161 | 2-65 | 31,00 |
| EA2180 | 2-65 | 39,26 |
| EA2200 | 2-61 | 8,76 |
| EA2210 | 2-61 | 43,69 |
| EA2212 | 2-61 | 52,54 |
| EA2216 | 2-61 | 70,06 |
| EA2240 | 2-61 | 17,00 |
| EA2260 | 2-61 | 25,82 |
| EA2280 | 2-61 | 34,84 |
| EA2280 | 2-133 | 34,84 |
| EA2310 | 2-65 | 54,07 |
| EA2312 | 2-65 | 62,77 |
| EA2316 | 2-65 | 95,02 |
| EA2340 | 2-65 | 23,61 |
| EA2360 | 2-65 | 33,41 |
| EA2380 | 2-65 | 43,19 |
| EA3061 | 2-66 | 4,46 |
| EA3081 | 2-66 | 5,94 |
| EA4061 | 2-66 | 5,94 |
| EA4081 | 2-66 | 7,92 |
| EA5011 | 2-64 | 31,11 |
| EA5022 | 2-64 | 37,33 |
| EA5061 | 2-66 | 7,43 |
| EA5063 | 2-64 | 19,28 |
| EA5081 | 2-66 | 9,92 |
| EA5083 | 2-64 | 25,99 |
| EA5310 | 2-64 | 32,54 |
| EA5322 | 2-64 | 38,48 |
| EA5360 | 2-64 | 25,00 |
| EA5380 | 2-64 | 27,94 |

# List of codes

## IS2 - IS2 EMC enclosures

| Oder code | Page | Weight Kg |
|---|---|---|
| EA5413 | 2-64 | |
| EA5461 | 2-64 | |
| EA5480 | 2-64 | |
| EA5610 | 2-64 | |
| EA5616 | 2-64 | |
| EA5620 | 2-64 | |
| EA5811 | 2-64 | 28,57 |
| EA5822 | 2-64 | 25,00 |
| EA5861 | 2-64 | 17,36 |
| EA5883 | 2-64 | 23,19 |
| EA6002 | 2-65 | 1,67 |
| EA6003 | 2-63 | 1,39 |
| EA6061 | 2-66 | 8,91 |
| EA6081 | 2-66 | 11,88 |
| EA8002 | 2-65 | 2,27 |
| EA8003 | 2-63 | 1,96 |
| EA8061 | 2-66 | 11,88 |
| EA8081 | 2-66 | 15,84 |
| EB0400 | 2-67 | 0,97 |
| EB0440 | 2-67 | 1,57 |
| EB0500 | 2-67 | 1,20 |
| EB0550 | 2-67 | 2,07 |
| EB0600 | 2-67 | 1,41 |
| EB0660 | 2-67 | 2,04 |
| EB0800 | 2-67 | 1,91 |
| EB0880 | 2-67 | 2,74 |
| EB1000 | 2-67 | 2,55 |
| EB1004 | 2-84 | 5,08 |
| EB1006 | 2-84 | 4,10 |
| EB1010 | 2-67 | 4,25 |
| EB1011 | 2-67 | 5,12 |
| EB1020 | 2-67 | 2,58 |
| EB1041 | 2-107 | 0,54 |
| EB1042 | 2-107 | 0,86 |
| EB1043 | 2-107 | 1,21 |
| EB1060 | 2-67 | 3,07 |
| EB1080 | 2-67 | 4,15 |
| EB1100 | 2-51 | 4,84 |
| EB1100 | 2-68 | 4,84 |
| EB1100 | 2-75 | 4,84 |
| EB1101 | 2-66 | 6,45 |
| EB1102 | 2-68 | 6,67 |
| EB1200 | 2-67 | 3,86 |
| EB4100 | 2-51 | 1,72 |
| EB4100 | 2-68 | 1,72 |
| EB4100 | 2-75 | 1,72 |
| EB4101 | 2-66 | 1,94 |
| EB4101 | 2-130 | 1,94 |
| EB4810 | 2-67 | 3,65 |
| EB4860 | 2-67 | 2,26 |

| Oder code | Page | Weight Kg |
|---|---|---|
| EB4880 | 2-67 | 2,90 |
| EB5100 | 2-51 | 2,16 |
| EB5100 | 2-68 | 2,16 |
| EB5100 | 2-75 | 2,16 |
| EB5101 | 2-66 | 2,58 |
| EB6000 | 2-84 | 0,83 |
| EB6100 | 2-51 | 2,80 |
| EB6100 | 2-68 | 2,80 |
| EB6100 | 2-75 | 2,80 |
| EB6100 | 2-133 | 2,80 |
| EB6101 | 2-66 | 3,87 |
| EB6102 | 2-68 | 3,89 |
| EB6104 | 2-84 | 3,66 |
| EB6106 | 2-84 | 3,02 |
| EB8000 | 2-84 | 0,81 |
| EB8001 | 2-84 | 1,20 |
| EB8001 | 2-86 | 1,20 |
| EB8100 | 2-51 | 3,67 |
| EB8100 | 2-68 | 3,67 |
| EB8100 | 2-75 | 3,67 |
| EB8101 | 2-66 | 5,16 |
| EB8102 | 2-68 | 5,28 |
| EB8104 | 2-84 | 4,38 |
| EB8106 | 2-84 | 3,56 |
| EC1440K | 2-48 | 9,87 |
| EC1460K | 2-48 | 14,95 |
| EC1480FC6K | 2-50 | 14,92 |
| EC1480K | 2-48 | 19,93 |
| EC1610K | 2-48 | 28,40 |
| EC1640K | 2-48 | 11,36 |
| EC1660K | 2-48 | 17,08 |
| EC1680FC6K | 2-50 | 17,08 |
| EC1680K | 2-48 | 22,78 |
| EC1810K | 2-48 | 31,79 |
| EC1811K | 2-54 | 22,98 |
| EC1831K | 2-48 | 9,69 |
| EC1840K | 2-48 | 12,93 |
| EC1841K | 2-54 | 9,19 |
| EC1851K | 2-54 | 11,49 |
| EC1860K | 2-48 | 19,22 |
| EC1861K | 2-54 | 13,79 |
| EC1880FC5K | 2-50 | 16,01 |
| EC1880FC6K | 2-50 | 19,22 |
| EC1880FC8K | 2-50 | 25,51 |
| EC1880FV6K | 2-50 | 16,33 |
| EC1880FV8K | 2-50 | 21,68 |
| EC1880K | 2-48 | 25,51 |
| EC1880VC2K | 2-50 | 7,23 |
| EC1880VC4K | 2-50 | 12,93 |
| EC1881K | 2-54 | 18,39 |

| Oder code | Page | Weight Kg |
|---|---|---|
| EC1882 | 2-49 | 19,37 |
| EC1882 | 2-86 | 19,37 |
| EC1884 | 2-49 | 19,37 |
| EC1884 | 2-86 | 19,37 |
| EC2011K | 2-54 | 25,54 |
| EC2012K | 2-48 | 35,29 |
| EC2012K | 2-132 | 35,29 |
| EC2031K | 2-48 | 10,77 |
| EC2040K | 2-48 | 14,34 |
| EC2041K | 2-54 | 10,22 |
| EC2051K | 2-54 | 12,77 |
| EC2060EMCKM | 2-140 | 26,60 |
| EC2060K | 2-48 | 26,60 |
| EC2060K | 2-132 | 26,60 |
| EC2061K | 2-54 | 15,32 |
| EC2080EMCKM | 2-140 | 28,31 |
| EC2080FC5K | 2-133 | 17,79 |
| EC2080FC5K | 2-50 | 17,79 |
| EC2080FC6K | 2-50 | 21,33 |
| EC2080FC8K | 2-50 | 28,31 |
| EC2080FV6K | 2-50 | 18,13 |
| EC2080FV6K | 2-133 | 18,13 |
| EC2080FV8K | 2-50 | 24,06 |
| EC2080K | 2-48 | 28,31 |
| EC2080K | 2-132 | 28,31 |
| EC2080VC2K | 2-50 | 8,04 |
| EC2080VC4K | 2-50 | 14,34 |
| EC2081K | 2-54 | 20,43 |
| EC2082 | 2-49 | 21,28 |
| EC2082 | 2-86 | 21,28 |
| EC2084 | 2-49 | 21,28 |
| EC2084 | 2-86 | 21,28 |
| EC2210K | 2-48 | 38,78 |
| EC2211K | 2-54 | 28,09 |
| EC2232K | 2-48 | 11,85 |
| EC2240K | 2-48 | 15,76 |
| EC2241K | 2-54 | 11,24 |
| EC2251K | 2-54 | 14,05 |
| EC2260K | 2-48 | 23,43 |
| EC2261K | 2-54 | 16,86 |
| EC2280FC5K | 2-50 | 19,57 |
| EC2280FC6K | 2-50 | 23,43 |
| EC2280FC8K | 2-50 | 31,11 |
| EC2280FV6K | 2-50 | 19,92 |
| EC2280FV8K | 2-50 | 26,44 |
| EC2280K | 2-48 | 31,11 |
| EC2280VC2K | 2-50 | 8,84 |
| EC2280VC4K | 2-50 | 15,76 |
| EC2281K | 2-54 | 22,47 |
| EC2282 | 2-49 | 23,18 |

# List of codes

## IS2 - IS2 EMC enclosures

| Oder code | Page | Weight Kg |
|---|---|---|
| EC2282 | 2-86 | 23,18 |
| EC2284 | 2-49 | 23,18 |
| EC2284 | 2-86 | 23,18 |
| ED1412SK | 2-51 | 13,61 |
| ED1612SK | 2-51 | 15,54 |
| ED1802SK | 2-51 | 7,25 |
| ED1804SK | 2-51 | 12,81 |
| ED1810SK | 2-51 | 16,01 |
| ED1812SK | 2-51 | 19,22 |
| ED1816SK | 2-51 | 25,62 |
| ED2002SK | 2-51 | 8,03 |
| ED2004SK | 2-51 | 14,23 |
| ED2010SK | 2-133 | 17,79 |
| ED2010SK | 2-51 | 17,79 |
| ED2012SK | 2-51 | 27,00 |
| ED2016SK | 2-51 | 28,47 |
| ED2202SK | 2-51 | 8,83 |
| ED2204SK | 2-51 | 15,66 |
| ED2210SK | 2-51 | 19,57 |
| ED2212SK | 2-51 | 23,49 |
| ED2216SK | 2-51 | 31,32 |
| EE0024 | 2-110 | 1,32 |
| EE0240 | 2-70 | 2,16 |
| EE0250 | 2-70 | 2,32 |
| EE0260 | 2-70 | 2,58 |
| EE0280 | 2-70 | 3,59 |
| EE0340 | 2-70 | 2,16 |
| EE0355 | 2-70 | 2,86 |
| EE0360 | 2-70 | 3,56 |
| EE0380 | 2-70 | 4,95 |
| EE0440 | 2-70 | 3,24 |
| EE0450 | 2-70 | 3,81 |
| EE0460 | 2-70 | 4,30 |
| EE0480 | 2-70 | 7,17 |
| EE0640 | 2-70 | 4,32 |
| EE0650 | 2-70 | 5,22 |
| EE0660 | 2-70 | 6,03 |
| EE0680 | 2-70 | 8,34 |
| EE0840 | 2-70 | 5,61 |
| EE0850 | 2-70 | 6,68 |
| EE0860 | 2-70 | 7,75 |
| EE0880 | 2-70 | 11,04 |
| EE1001K | 2-69 | 6,98 |
| EE1002K | 2-69 | 9,31 |
| EE1003K | 2-69 | 5,32 |
| EE1004K | 2-69 | 6,52 |
| EE1011 | 2-69 | 12,28 |
| EE1040 | 2-70 | 7,53 |
| EE1041 | 2-69 | 5,13 |
| EE1050 | 2-70 | 9,48 |

| Oder code | Page | Weight Kg |
|---|---|---|
| EE1051 | 2-69 | 6,32 |
| EE1060 | 2-70 | 11,09 |
| EE1061 | 2-69 | 7,51 |
| EE1080 | 2-70 | 16,42 |
| EE1081 | 2-69 | 9,90 |
| EE1810K | 2-71 | 26,55 |
| EE1811 | 2-68 | 17,30 |
| EE1841 | 2-68 | 6,31 |
| EE1851 | 2-68 | 8,14 |
| EE1852 | 2-110 | 13,20 |
| EE1860K | 2-71 | 17,61 |
| EE1861 | 2-68 | 9,98 |
| EE1862 | 2-110 | 15,84 |
| EE1880K | 2-71 | 22,08 |
| EE1881 | 2-68 | 16,64 |
| EE1906K | 2-71 | 17,61 |
| EE1908K | 2-71 | 22,08 |
| EE1910K | 2-71 | 26,55 |
| EE2010K | 2-71 | 29,50 |
| EE2011 | 2-68 | 19,26 |
| EE2020 | 2-70 | 0,87 |
| EE2030 | 2-70 | 1,37 |
| EE2040 | 2-70 | 2,05 |
| EE2041 | 2-68 | 7,03 |
| EE2051 | 2-68 | 9,07 |
| EE2052 | 2-110 | 14,75 |
| EE2060K | 2-71 | 19,57 |
| EE2061 | 2-68 | 11,11 |
| EE2062 | 2-110 | 17,70 |
| EE2080K | 2-71 | 24,54 |
| EE2081 | 2-68 | 15,18 |
| EE2100 | 2-70 | 5,52 |
| EE2106K | 2-71 | 19,57 |
| EE2108K | 2-71 | 24,54 |
| EE2110K | 2-71 | 29,50 |
| EE2210K | 2-71 | 32,45 |
| EE2211 | 2-68 | 21,22 |
| EE2241 | 2-68 | 7,76 |
| EE2251 | 2-68 | 9,99 |
| EE2252 | 2-110 | 16,31 |
| EE2260K | 2-71 | 21,53 |
| EE2261 | 2-68 | 12,24 |
| EE2262 | 2-110 | 19,57 |
| EE2280K | 2-71 | 26,99 |
| EE2280K | 2-133 | 26,99 |
| EE2281 | 2-68 | 16,73 |
| EE2306K | 2-71 | 21,53 |
| EE2308K | 2-71 | 26,99 |
| EE2310K | 2-71 | 32,45 |
| EE2406 | 2-110 | 0,62 |

| Oder code | Page | Weight Kg |
|---|---|---|
| EE2410 | 2-110 | 0,62 |
| EE2416 | 2-110 | 0,62 |
| EE2600 | 2-70 | 3,20 |
| EE2800 | 2-70 | 4,39 |
| EE4041 | 2-69 | 2,21 |
| EE4051 | 2-69 | 2,69 |
| EE6041 | 2-69 | 3,18 |
| EE6051 | 2-69 | 3,90 |
| EE6061 | 2-69 | 4,62 |
| EE8041 | 2-69 | 4,15 |
| EE8051 | 2-69 | 5,11 |
| EE8061 | 2-69 | 6,07 |
| EE8081 | 2-69 | 7,98 |
| EF1010 | 2-55 | 10,93 |
| EF1011 | 2-55 | 8,93 |
| EF1012 | 2-56 | 11,28 |
| EF1040 | 2-55 | 3,10 |
| EF1041 | 2-55 | 2,47 |
| EF1042 | 2-56 | 3,38 |
| EF1051 | 2-55 | 3,58 |
| EF1052 | 2-56 | 4,79 |
| EF1053 | 2-55 | 4,51 |
| EF1060 | 2-55 | 5,92 |
| EF1060 | 2-127 | 5,92 |
| EF1060 | 2-132 | 5,92 |
| EF1061 | 2-55 | 4,81 |
| EF1061 | 2-133 | 4,81 |
| EF1062 | 2-56 | 6,20 |
| EF1080 | 2-55 | 8,74 |
| EF1081 | 2-55 | 7,15 |
| EF1082 | 2-56 | 9,02 |
| EF2610 | 2-57 | 0,85 |
| EF2620 | 2-57 | 1,25 |
| EF2810 | 2-57 | 1,10 |
| EF2820 | 2-57 | 1,68 |
| EF3610 | 2-57 | 0,75 |
| EF3810 | 2-57 | 1,00 |
| EF4010 | 2-55 | 3,12 |
| EF4011 | 2-55 | 3,19 |
| EF4012 | 2-56 | 3,91 |
| EF4040 | 2-55 | 0,87 |
| EF4041 | 2-55 | 0,75 |
| EF4042 | 2-56 | 0,95 |
| EF4050 | 2-55 | 1,26 |
| EF4051 | 2-55 | 1,10 |
| EF4052 | 2-56 | 1,34 |
| EF4060 | 2-55 | 1,66 |
| EF4061 | 2-55 | 1,33 |
| EF4063 | 2-56 | 1,74 |
| EF4080 | 2-55 | 2,45 |

# List of codes

## IS2 - IS2 EMC enclosures

| Oder code | Page | Weight Kg |
|---|---|---|
| EF4081 | 2-55 | 2,18 |
| EF4082 | 2-56 | 2,52 |
| EF4610 | 2-57 | 0,75 |
| EF4810 | 2-57 | 0,90 |
| EF6010 | 2-55 | 5,68 |
| EF6010 | 2-55 | 5,68 |
| EF6011 | 2-55 | 4,79 |
| EF6011 | 2-55 | 4,79 |
| EF6012 | 2-56 | 5,86 |
| EF6012 | 2-56 | 5,86 |
| EF6040 | 2-55 | 1,61 |
| EF6040 | 2-55 | 1,61 |
| EF6041 | 2-55 | 1,33 |
| EF6041 | 2-55 | 1,33 |
| EF6043 | 2-56 | 1,76 |
| EF6043 | 2-56 | 1,76 |
| EF6050 | 2-55 | 2,35 |
| EF6050 | 2-126 | 2,35 |
| EF6050 | 2-55 | 2,35 |
| EF6051 | 2-55 | 1,93 |
| EF6051 | 2-55 | 1,93 |
| EF6052 | 2-56 | 2,49 |
| EF6052 | 2-56 | 2,49 |
| EF6060 | 2-55 | 3,08 |
| EF6060 | 2-55 | 3,08 |
| EF6060 | 2-127 | 3,08 |
| EF6060 | 2-128 | 3,08 |
| EF6061 | 2-55 | 2,58 |
| EF6061 | 2-55 | 2,58 |
| EF6061 | 2-133 | 2,58 |
| EF6062 | 2-56 | 3,22 |
| EF6062 | 2-56 | 3,22 |
| EF6080 | 2-55 | 4,54 |
| EF6080 | 2-55 | 4,54 |
| EF6081 | 2-55 | 3,83 |
| EF6081 | 2-55 | 3,83 |
| EF6082 | 2-56 | 4,69 |
| EF6082 | 2-56 | 4,69 |
| EF6610 | 2-57 | 0,55 |
| EF6810 | 2-57 | 0,75 |
| EF8010 | 2-55 | 8,30 |
| EF8010 | 2-55 | 8,30 |
| EF8011 | 2-55 | 6,88 |
| EF8011 | 2-55 | 6,88 |
| EF8012 | 2-56 | 8,57 |
| EF8012 | 2-56 | 8,57 |
| EF8040 | 2-55 | 2,36 |
| EF8040 | 2-55 | 2,36 |
| EF8041 | 2-55 | 1,92 |
| EF8041 | 2-55 | 1,92 |

| Oder code | Page | Weight Kg |
|---|---|---|
| EF8042 | 2-56 | 2,57 |
| EF8042 | 2-56 | 2,57 |
| EF8050 | 2-55 | 3,43 |
| EF8050 | 2-55 | 3,43 |
| EF8051 | 2-55 | 2,76 |
| EF8051 | 2-55 | 2,76 |
| EF8052 | 2-56 | 3,64 |
| EF8052 | 2-56 | 3,64 |
| EF8060 | 2-55 | 4,50 |
| EF8060 | 2-55 | 4,50 |
| EF8060 | 2-128 | 4,50 |
| EF8060 | 2-128 | 4,50 |
| EF8061 | 2-55 | 3,71 |
| EF8061 | 2-55 | 3,71 |
| EF8061 | 2-133 | 3,71 |
| EF8062 | 2-56 | 4,71 |
| EF8062 | 2-56 | 4,71 |
| EF8080 | 2-55 | 6,64 |
| EF8080 | 2-55 | 6,64 |
| EF8081 | 2-55 | 5,50 |
| EF8081 | 2-55 | 5,50 |
| EF8082 | 2-56 | 6,86 |
| EF8082 | 2-56 | 6,86 |
| EF9620 | 2-57 | 0,83 |
| EF9820 | 2-57 | 0,83 |
| EG0119 | 2-87 | 0,48 |
| EG0219 | 2-87 | 0,75 |
| EG0319 | 2-87 | 0,98 |
| EG0419 | 2-87 | 1,06 |
| EG0500K | 2-83 | 4,00 |
| EG0519 | 2-87 | 1,55 |
| EG0619 | 2-87 | 1,75 |
| EG0719 | 2-87 | 1,86 |
| EG0900K | 2-83 | 4,80 |
| EG0919 | 2-87 | 2,69 |
| EG1019 | 2-87 | 3,02 |
| EG1130K | 2-86 | 2,80 |
| EG1219 | 2-87 | 3,59 |
| EG1300K | 2-83 | 6,93 |
| EG1419 | 2-87 | 4,20 |
| EG1500K | 2-86 | 1,32 |
| EG1519 | 2-87 | 4,53 |
| EG1619 | 2-87 | 4,84 |
| EG1800 | 2-83 | 3,38 |
| EG1801K | 2-83 | 13,59 |
| EG1803K | 2-83 | 16,65 |
| EG1804K | 2-85 | 18,65 |
| EG1805 | 2-84 | 7,38 |
| EG1819 | 2-87 | 5,39 |
| EG1880 | 2-83 | 9,50 |

| Oder code | Page | Weight Kg |
|---|---|---|
| EG1900K | 2-86 | 2,44 |
| EG1902 | 2-87 | 0,42 |
| EG1903 | 2-87 | 0,62 |
| EG1904 | 2-87 | 0,83 |
| EG1905 | 2-87 | 1,04 |
| EG1906 | 2-87 | 1,25 |
| EG1907 | 2-87 | 1,46 |
| EG1908 | 2-87 | 1,67 |
| EG1909 | 2-87 | 1,87 |
| EG1910 | 2-87 | 2,08 |
| EG1911 | 2-87 | 2,29 |
| EG1912 | 2-87 | 2,50 |
| EG1913 | 2-87 | 2,71 |
| EG1914 | 2-87 | 2,91 |
| EG1915 | 2-87 | 3,12 |
| EG1916 | 2-87 | 3,33 |
| EG1917 | 2-87 | 3,54 |
| EG1918 | 2-87 | 3,75 |
| EG1920 | 2-87 | 4,16 |
| EG1991 | 2-87 | 0,21 |
| EG1999 | 2-87 | 3,96 |
| EG2000 | 2-83 | 3,76 |
| EG2000 | 2-131 | 3,76 |
| EG2001K | 2-83 | 15,10 |
| EG2003K | 2-83 | 18,50 |
| EG2003K | 2-131 | 18,50 |
| EG2004K | 2-85 | 20,50 |
| EG2005 | 2-84 | 8,12 |
| EG2019 | 2-87 | 6,05 |
| EG2080 | 2-83 | 10,62 |
| EG2200 | 2-83 | 4,13 |
| EG2201K | 2-83 | 16,61 |
| EG2203K | 2-83 | 20,35 |
| EG2204K | 2-85 | 22,30 |
| EG2205 | 2-84 | 9,04 |
| EG2280 | 2-83 | 11,73 |
| EH0003 | 2-89 | 0,98 |
| EH0004 | 2-89 | 1,24 |
| EH0018 | 2-78 | 0,85 |
| EH0018 | 2-129 | 0,85 |
| EH0018 | 2-130 | 0,85 |
| EH0024 | 2-78 | 0,77 |
| EH0029 | 2-78 | 1,23 |
| EH0036 | 2-78 | 0,97 |
| EH0562K | 2-80 | 0,37 |
| EH0582K | 2-80 | 0,54 |
| EH1060 | 2-76 | 20,30 |
| EH1061K | 2-77 | 14,19 |
| EH1062K | 2-80 | 0,63 |
| EH1080 | 2-76 | 65,51 |

# List of codes

## IS2 - IS2 EMC enclosures

| Oder code | Page | Weight Kg |
|---|---|---|
| EH1081K | 2-77 | 18,92 |
| EH1082K | 2-80 | 0,87 |
| EH1518K | 2-80 | 0,89 |
| EH1524K | 2-80 | 0,89 |
| EH1529K | 2-80 | 1,23 |
| EH1536K | 2-80 | 1,23 |
| EH1562K | 2-80 | 0,89 |
| EH1582K | 2-80 | 1,23 |
| EH1800 | 2-78 | 4,00 |
| EH1800 | 2-129 | 4,00 |
| EH1800 | 2-130 | 4,00 |
| EH1800 | 2-130 | 4,00 |
| EH1889 | 2-82 | 0,21 |
| EH1890 | 2-82 | 0,13 |
| EH1925 | 2-89 | 0,80 |
| EH1991 | 2-87 | 0,53 |
| EH1992 | 2-87 | 0,78 |
| EH1993 | 2-87 | 1,03 |
| EH2000 | 2-78 | 4,80 |
| EH2018K | 2-80 | 1,14 |
| EH2024K | 2-80 | 1,14 |
| EH2029K | 2-80 | 1,59 |
| EH2036K | 2-80 | 1,59 |
| EH2060 | 2-76 | 10,57 |
| EH2060 | 2-129 | 10,57 |
| EH2060 | 2-130 | 10,57 |
| EH2061K | 2-77 | 2,84 |
| EH2061K | 2-129 | 2,84 |
| EH2061K | 2-130 | 2,84 |
| EH2062K | 2-80 | 1,14 |
| EH2063K | 2-81 | 1,66 |
| EH2065 | 2-79 | 2,00 |
| EH2066 | 2-76 | 6,56 |
| EH2067K | 2-77 | 2,84 |
| EH2081K | 2-77 | 3,78 |
| EH2082K | 2-80 | 1,59 |
| EH2083K | 2-81 | 2,21 |
| EH2085 | 2-79 | 4,50 |
| EH2086 | 2-76 | 8,75 |
| EH2087K | 2-77 | 3,78 |
| EH2118 | 2-82 | 0,07 |
| EH2129 | 2-82 | 0,08 |
| EH2180 | 2-76 | 14,10 |
| EH2200 | 2-78 | 8,19 |
| EH2272K | 2-81 | 1,17 |
| EH2272K | 2-129 | 1,17 |
| EH2272K | 2-130 | 1,17 |
| EH2297K | 2-81 | 1,17 |
| EH2472K | 2-81 | 1,17 |
| EH3018K | 2-80 | 1,66 |

| Oder code | Page | Weight Kg |
|---|---|---|
| EH3029K | 2-80 | 2,22 |
| EH3060 | 2-76 | 8,00 |
| EH3060 | 2-129 | 8,00 |
| EH3060 | 2-130 | 8,00 |
| EH3061K | 2-77 | 4,26 |
| EH3061K | 2-129 | 4,26 |
| EH3061K | 2-130 | 4,26 |
| EH3063K | 2-80 | 1,66 |
| EH3063K | 2-129 | 1,66 |
| EH3063K | 2-130 | 1,66 |
| EH3064K | 2-81 | 2,49 |
| EH3065 | 2-79 | 5,06 |
| EH3080 | 2-76 | 19,65 |
| EH3081K | 2-77 | 5,68 |
| EH3082K | 2-80 | 2,31 |
| EH3082K | 2-130 | 2,31 |
| EH3083K | 2-81 | 3,32 |
| EH3085 | 2-79 | 6,74 |
| EH3272K | 2-81 | 1,63 |
| EH3272K | 2-130 | 1,63 |
| EH3296K | 2-81 | 1,63 |
| EH3472K | 2-81 | 1,63 |
| EH3496K | 2-81 | 1,63 |
| EH4061K | 2-77 | 5,68 |
| EH4061K | 2-129 | 5,68 |
| EH4061K | 2-130 | 5,68 |
| EH4062K | 2-80 | 2,18 |
| EH4063 | 2-76 | 19,65 |
| EH4063 | 2-129 | 19,65 |
| EH4063 | 2-130 | 19,65 |
| EH4064K | 2-81 | 3,32 |
| EH4065 | 2-79 | 6,74 |
| EH4080 | 2-76 | 26,20 |
| EH4081K | 2-77 | 7,57 |
| EH4082K | 2-80 | 3,04 |
| EH4083K | 2-81 | 4,42 |
| EH4085 | 2-79 | 8,99 |
| EH5060 | 2-76 | 24,57 |
| EH5061K | 2-77 | 7,09 |
| EH5062K | 2-80 | 2,70 |
| EH5063K | 2-81 | 4,15 |
| EH5080 | 2-76 | 32,75 |
| EH5081K | 2-77 | 9,46 |
| EH5082K | 2-80 | 3,76 |
| EH5084K | 2-81 | 5,53 |
| EH6010K | 2-77 | 2,94 |
| EH6018K | 2-80 | 3,22 |
| EH6018K | 2-129 | 3,22 |
| EH6018K | 2-130 | 3,22 |
| EH6025K | 2-80 | 3,22 |

| Oder code | Page | Weight Kg |
|---|---|---|
| EH6029K | 2-80 | 4,48 |
| EH6029K | 2-130 | 4,48 |
| EH6036K | 2-80 | 4,48 |
| EH6060 | 2-76 | 29,48 |
| EH6061K | 2-77 | 8,51 |
| EH6062K | 2-80 | 3,22 |
| EH6063K | 2-81 | 4,97 |
| EH6080 | 2-76 | 39,31 |
| EH6082K | 2-80 | 4,48 |
| EH6083K | 2-77 | 11,35 |
| EH6084K | 2-81 | 6,63 |
| EH7262K | 2-77 | 2,84 |
| EH7262K | 2-129 | 2,84 |
| EH7262K | 2-130 | 2,84 |
| EH7282K | 2-77 | 3,78 |
| EH7284K | 2-77 | 3,78 |
| EH8010K | 2-77 | 3,92 |
| EH8060 | 2-76 | 39,31 |
| EH8062K | 2-77 | 11,35 |
| EH8080 | 2-76 | 20,00 |
| EH8081K | 2-77 | 15,13 |
| EK1010KN | 2-46 | 68,84 |
| EK1010RK | 2-113 | 12,30 |
| EK1040KN | 2-46 | 31,39 |
| EK1050KN | 2-46 | 35,08 |
| EK1050RK | 2-113 | 6,28 |
| EK1060KN | 2-46 | 38,77 |
| EK1060KN | 2-132 | 38,77 |
| EK1060KN | 2-133 | 38,77 |
| EK1080KN | 2-46 | 46,12 |
| EK1240KN | 2-46 | 37,35 |
| EK1240RK | 2-113 | 6,07 |
| EK1250KN | 2-46 | 41,52 |
| EK1250RK | 2-113 | 7,51 |
| EK1260KN | 2-46 | 45,73 |
| EK1260KN | 2-133 | 45,73 |
| EK1260RK | 2-113 | 8,54 |
| EK1280KN | 2-46 | 54,08 |
| EK1280RK | 2-113 | 11,83 |
| EK3040KN | 2-46 | 15,31 |
| EK3050KN | 2-46 | 16,94 |
| EK3060KN | 2-46 | 18,57 |
| EK3080KN | 2-46 | 21,81 |
| EK4010KN | 2-46 | 36,35 |
| EK4010RK | 2-113 | 5,08 |
| EK4040KN | 2-46 | 20,41 |
| EK4040RK | 2-113 | 2,10 |
| EK4050KN | 2-46 | 22,59 |
| EK4050RK | 2-113 | 2,59 |
| EK4060KN | 2-46 | 24,76 |

# List of codes

## IS2 - IS2 EMC enclosures

| Oder code | Page | Weight Kg |
|---|---|---|
| EK4060RK | 2-113 | 3,09 |
| EK4080KN | 2-46 | 29,08 |
| EK4080RK | 2-113 | 4,08 |
| EK6010KN | 2-46 | 51,52 |
| EK6010RK | 2-113 | 7,49 |
| EK6040KN | 2-46 | 18,40 |
| EK6050KN | 2-46 | 26,75 |
| EK6050KN | 2-132 | 26,75 |
| EK6050RK | 2-113 | 3,62 |
| EK6060KN | 2-46 | 29,43 |
| EK6060RK | 2-113 | 4,56 |
| EK6080KN | 2-46 | 34,76 |
| EK6080RK | 2-113 | 6,02 |
| EK8010KN | 2-46 | 37,00 |
| EK8010RK | 2-113 | 9,69 |
| EK8040KN | 2-46 | 27,73 |
| EK8050KN | 2-46 | 30,92 |
| EK8050RK | 2-113 | 5,05 |
| EK8060KN | 2-46 | 27,40 |
| EK8060KN | 2-132 | 27,40 |
| EK8060KN | 2-133 | 27,40 |
| EK8080KN | 2-46 | 40,44 |
| EK8080RK | 2-113 | 7,96 |
| EL1440K | 2-53 | 16,41 |
| EL1460K | 2-53 | 25,16 |
| EL1480K | 2-53 | 29,29 |
| EL1610K | 2-53 | 36,85 |
| EL1650K | 2-53 | 23,51 |
| EL1660K | 2-53 | 28,46 |
| EL1680K | 2-53 | 33,48 |
| EL1810K | 2-53 | 47,19 |
| EL1811K | 2-53 | 23,59 |
| EL1811K | 2-114 | 23,59 |
| EL1840K | 2-53 | 18,62 |
| EL1840K | 2-130 | 18,62 |
| EL1841K | 2-53 | 9,31 |
| EL1841K | 2-114 | 9,31 |
| EL1850K | 2-53 | 23,38 |
| EL1850K | 2-126 | 23,38 |
| EL1851K | 2-53 | 11,69 |
| EL1851K | 2-114 | 11,69 |
| EL1860K | 2-53 | 28,14 |
| EL1861K | 2-53 | 14,07 |
| EL1861K | 2-114 | 14,07 |
| EL1880K | 2-53 | 37,66 |
| EL1881K | 2-53 | 18,83 |
| EL1881K | 2-114 | 18,83 |
| EL2011K | 2-53 | 26,21 |
| EL2011K | 2-114 | 26,21 |
| EL2012K | 2-53 | 52,43 |

| Oder code | Page | Weight Kg |
|---|---|---|
| EL2040K | 2-53 | 20,69 |
| EL2041K | 2-53 | 10,34 |
| EL2041K | 2-114 | 10,34 |
| EL2050K | 2-53 | 25,98 |
| EL2050K | 2-126 | 25,98 |
| EL2050K | 2-131 | 25,98 |
| EL2050K | 2-131 | 25,98 |
| EL2050K | 2-132 | 25,98 |
| EL2051K | 2-53 | 12,99 |
| EL2051K | 2-114 | 12,99 |
| EL2060EMCK | 2-140 | 15,63 |
| EL2060K | 2-53 | 31,27 |
| EL2060K | 2-127 | 31,27 |
| EL2060K | 2-127 | 31,27 |
| EL2060K | 2-128 | 31,27 |
| EL2060K | 2-128 | 31,27 |
| EL2060K | 2-128 | 31,27 |
| EL2060K | 2-129 | 31,27 |
| EL2060K | 2-132 | 31,27 |
| EL2060K | 2-133 | 31,27 |
| EL2060K | 2-133 | 31,27 |
| EL2061K | 2-53 | 15,63 |
| EL2061K | 2-114 | 15,63 |
| EL2080EMCK | 2-140 | 20,92 |
| EL2080K | 2-53 | 41,85 |
| EL2081K | 2-53 | 20,92 |
| EL2081K | 2-114 | 20,92 |
| EL2210K | 2-53 | 57,67 |
| EL2211K | 2-53 | 28,84 |
| EL2211K | 2-114 | 28,84 |
| EL2240K | 2-53 | 22,76 |
| EL2241K | 2-53 | 11,38 |
| EL2241K | 2-114 | 11,38 |
| EL2250K | 2-53 | 28,57 |
| EL2251K | 2-53 | 14,29 |
| EL2251K | 2-114 | 14,29 |
| EL2260K | 2-53 | 34,39 |
| EL2260K | 2-133 | 34,39 |
| EL2261K | 2-53 | 17,20 |
| EL2261K | 2-114 | 17,20 |
| EL2280K | 2-53 | 46,03 |
| EL2281K | 2-53 | 23,02 |
| EL2281K | 2-114 | 23,02 |
| EM1400 | 2-47 | 11,40 |
| EM1600 | 2-47 | 13,98 |
| EM1800 | 2-47 | 14,40 |
| EM1801 | 2-51 | 7,95 |
| EM1802 | 2-75 | 23,54 |
| EM1803 | 2-75 | 31,43 |
| EM1804 | 2-75 | 5,98 |

| Oder code | Page | Weight Kg |
|---|---|---|
| EM1804 | 2-83 | 5,98 |
| EM1805 | 2-47 | 15,85 |
| EM1811 | 2-51 | 3,06 |
| EM2000 | 2-47 | 15,80 |
| EM2000 | 2-132 | 15,80 |
| EM2000 | 2-132 | 15,80 |
| EM2000 | 2-132 | 15,80 |
| EM2000 | 2-133 | 15,80 |
| EM2000 | 2-133 | 15,80 |
| EM2001 | 2-51 | 8,74 |
| EM2001 | 2-133 | 8,74 |
| EM2002 | 2-75 | 26,16 |
| EM2003 | 2-75 | 34,93 |
| EM2004 | 2-75 | 6,68 |
| EM2004 | 2-83 | 6,68 |
| EM2005 | 2-47 | 17,85 |
| EM2011 | 2-51 | 3,40 |
| EM2200 | 2-47 | 18,97 |
| EM2200 | 2-133 | 18,97 |
| EM2201 | 2-51 | 9,54 |
| EM2202 | 2-75 | 28,78 |
| EM2203 | 2-75 | 38,42 |
| EM2204 | 2-75 | 7,39 |
| EM2204 | 2-83 | 7,39 |
| EM2205 | 2-47 | 19,15 |
| EM2211 | 2-51 | 3,74 |
| EN0105K | 2-102 | 0,09 |
| EN0150EMCK | 2-141 | 0,18 |
| EN0150K | 2-102 | 0,18 |
| EN0204K | 2-102 | 0,30 |
| EN0250EMCK | 2-141 | 0,52 |
| EN0250K | 2-102 | 0,52 |
| EN0325K | 2-102 | 1,00 |
| EN0480K | 2-104 | 5,41 |
| EN0481K | 2-102 | 3,64 |
| EN0482K | 2-104 | 5,41 |
| EN0483K | 2-102 | 1,10 |
| EN0484K | 2-104 | 2,30 |
| EN0485K | 2-104 | 2,30 |
| EN1105K | 2-103 | 0,43 |
| EN1150EMCK | 2-141 | 0,88 |
| EN1150K | 2-103 | 0,88 |
| EN1204K | 2-103 | 1,02 |
| EN1250EMCK | 2-141 | 1,65 |
| EN1250K | 2-103 | 1,65 |
| EN2105K | 2-103 | 0,43 |
| EN2150EMCK | 2-141 | 0,88 |
| EN2150K | 2-103 | 0,88 |
| EN2204K | 2-103 | 1,02 |
| EN2250EMCK | 2-141 | 1,65 |

# List of codes

## IS2 - IS2 EMC enclosures

| Oder code | Page | Weight Kg |
|---|---|---|
| EN2250K | 2-103 | 1,65 |
| EN2325K | 2-103 | 3,70 |
| EN3105 | 2-115 | 0,04 |
| EN3150 | 2-115 | 0,08 |
| EN3204 | 2-115 | 0,13 |
| EN3250 | 2-115 | 0,17 |
| EN3325K | 2-103 | 3,70 |
| EN3326 | 2-115 | 0,44 |
| EP0400H | 2-48 | 1,24 |
| EP0600H | 2-48 | 1,95 |
| EP0800H | 2-48 | 2,66 |
| EP1000H | 2-48 | 3,37 |
| EP1800V | 2-48 | 5,75 |
| EP1811K | 2-52 | 24,06 |
| EP1812K | 2-52 | 28,82 |
| EP1830K | 2-52 | 7,33 |
| EP1830K | 2-52 | 7,33 |
| EP1840K | 2-52 | 9,77 |
| EP1860K | 2-52 | 14,53 |
| EP1880K | 2-52 | 19,29 |
| EP2000V | 2-48 | 6,38 |
| EP2010K | 2-52 | 26,73 |
| EP2010K | 2-132 | 26,73 |
| EP2010K | 2-133 | 26,73 |
| EP2012K | 2-52 | 32,02 |
| EP2012K | 2-133 | 32,02 |
| EP2030K | 2-52 | 8,14 |
| EP2030K | 2-52 | 8,14 |
| EP2041K | 2-52 | 10,85 |
| EP2060K | 2-52 | 16,14 |
| EP2060K | 2-132 | 16,14 |
| EP2080K | 2-52 | 21,44 |
| EP2080K | 2-132 | 21,44 |
| EP2200V | 2-48 | 7,02 |
| EP2210K | 2-52 | 29,40 |
| EP2212K | 2-52 | 35,23 |
| EP2231K | 2-52 | 8,95 |
| EP2231K | 2-52 | 8,95 |
| EP2240K | 2-52 | 11,94 |
| EP2260K | 2-52 | 17,76 |
| EP2280K | 2-52 | 23,58 |
| EP2280K | 2-133 | 23,58 |
| ER1000 | 2-72 | 0,31 |
| ER1010K | 2-72 | 53,16 |
| ER1041K | 2-72 | 24,28 |
| ER1050K | 2-72 | 29,09 |
| ER1060K | 2-72 | 33,90 |
| ER1080K | 2-72 | 43,53 |
| ER3010K | 2-73 | 40,00 |
| ER3011K | 2-73 | 41,43 |
| ER3012K | 2-73 | 42,85 |
| ER3040K | 2-73 | 29,81 |
| ER3041K | 2-73 | 31,24 |
| ER3042K | 2-73 | 32,66 |
| ER3050K | 2-73 | 31,51 |
| ER3051K | 2-73 | 32,93 |
| ER3052K | 2-73 | 34,36 |
| ER3060K | 2-73 | 33,21 |
| ER3061K | 2-73 | 34,63 |
| ER3062K | 2-73 | 36,06 |
| ER3080K | 2-73 | 36,61 |
| ER3081K | 2-73 | 38,03 |
| ER3082K | 2-73 | 39,45 |
| ER4011K | 2-72 | 23,53 |
| ER4040K | 2-72 | 10,90 |
| ER4050K | 2-72 | 13,00 |
| ER4060K | 2-72 | 15,11 |
| ER4080K | 2-72 | 19,32 |
| ER6010K | 2-72 | 33,40 |
| ER6040K | 2-72 | 15,36 |
| ER6050K | 2-72 | 18,36 |
| ER6060K | 2-72 | 21,37 |
| ER6080K | 2-72 | 27,39 |
| ER8010K | 2-72 | 43,28 |
| ER8040K | 2-72 | 19,82 |
| ER8050K | 2-72 | 23,73 |
| ER8061K | 2-72 | 27,64 |
| ER8080K | 2-72 | 35,46 |
| ES1800K | 2-33 | 128,80 |
| ES1800MF2K | 2-42 | 116,86 |
| ES1800MF4K | 2-42 | 122,55 |
| ES1800VK | 2-37 | 125,43 |
| ES1804FV2K | 2-38 | 111,87 |
| ES1804FV4K | 2-38 | 112,74 |
| ES1804K | 2-32 | 102,98 |
| ES1804MF2K | 2-42 | 94,18 |
| ES1804MF4K | 2-42 | 99,87 |
| ES1804MF4K | 2-130 | 99,87 |
| ES1804VC2K | 2-40 | 108,04 |
| ES1804VC4K | 2-40 | 108,39 |
| ES1804VK | 2-37 | 98,21 |
| ES1805FV2K | 2-38 | 115,56 |
| ES1805FV4K | 2-38 | 116,20 |
| ES1805K | 2-32 | 106,67 |
| ES1805MF2K | 2-42 | 97,86 |
| ES1805MF4K | 2-42 | 103,56 |
| ES1805VC2K | 2-40 | 111,73 |
| ES1805VC4K | 2-40 | 112,08 |
| ES1805VK | 2-37 | 101,90 |
| ES1806FV2K | 2-38 | 119,25 |
| ES1806FV4K | 2-38 | 121,20 |
| ES1806K | 2-33 | 110,36 |
| ES1806MF2K | 2-42 | 101,55 |
| ES1806MF4K | 2-42 | 107,22 |
| ES1806VC2K | 2-40 | 115,42 |
| ES1806VC4K | 2-40 | 115,77 |
| ES1806VK | 2-37 | 105,59 |
| ES1808FV2K | 2-38 | 126,60 |
| ES1808FV4K | 2-38 | 128,40 |
| ES1808K | 2-33 | 117,71 |
| ES1808MF2K | 2-42 | 117,71 |
| ES1808MF4K | 2-42 | 114,60 |
| ES1808VC2K | 2-40 | 122,77 |
| ES1808VC4K | 2-40 | 123,12 |
| ES1808VK | 2-37 | 102,83 |
| ES1810BK | 2-34 | 125,66 |
| ES1810K | 2-35 | 125,66 |
| ES1814BK | 2-34 | 112,27 |
| ES1814K | 2-35 | 112,27 |
| ES1815BK | 2-34 | 114,75 |
| ES1815K | 2-35 | 114,75 |
| ES1816BK | 2-34 | 115,20 |
| ES1816K | 2-35 | 115,20 |
| ES1818BK | 2-34 | 117,30 |
| ES1818K | 2-35 | 117,30 |
| ES1824BK | 2-34 | 130,66 |
| ES1824FV4K | 2-38 | 128,28 |
| ES1824K | 2-35 | 130,66 |
| ES1824MF4K | 2-42 | 110,59 |
| ES1824VC4K | 2-40 | 124,46 |
| ES1824VC4K | 2-130 | 124,46 |
| ES1824VK | 2-38 | 124,89 |
| ES1825FV4K | 2-38 | 132,45 |
| ES1825MF4K | 2-42 | 114,76 |
| ES1825VC4K | 2-40 | 128,63 |
| ES1825VK | 2-38 | 129,06 |
| ES1826BK | 2-34 | 139,04 |
| ES1826FV4K | 2-38 | 136,67 |
| ES1826K | 2-35 | 139,04 |
| ES1826MF4K | 2-42 | 118,97 |
| ES1826VC4K | 2-40 | 132,84 |
| ES1826VK | 2-38 | 133,28 |
| ES1827BK | 2-34 | 134,83 |
| ES1827K | 2-35 | 134,83 |
| ES1828BK | 2-34 | 147,39 |
| ES1828FV4K | 2-38 | 131,37 |
| ES1828K | 2-35 | 147,39 |
| ES1828MF4K | 2-42 | 127,31 |
| ES1828VC4K | 2-40 | 141,18 |
| ES1828VK | 2-38 | 141,62 |

# List of codes

## IS2 - IS2 EMC enclosures

| Oder code | Page | Weight Kg |
|---|---|---|
| ES1840K | 2-33 | 69,82 |
| ES1844K | 2-32 | 58,84 |
| ES1845K | 2-32 | 61,01 |
| ES1846K | 2-32 | 63,18 |
| ES1848K | 2-33 | 67,50 |
| ES1860K | 2-33 | 88,25 |
| ES1860MFK | 2-42 | 92,15 |
| ES1860VK | 2-37 | 85,37 |
| ES1864CK | 2-44 | 80,82 |
| ES1864K | 2-32 | 68,00 |
| ES1864K | 2-126 | 68,00 |
| ES1864LK | 2-44 | 79,62 |
| ES1864MFK | 2-42 | 62,15 |
| ES1864SPK | 2-36 | 58,55 |
| ES1864VK | 2-37 | 70,67 |
| ES1864VK | 2-129 | 70,67 |
| ES1864VK | 2-130 | 70,67 |
| ES1865CK | 2-44 | 90,43 |
| ES1865K | 2-32 | 73,00 |
| ES1865K | 2-126 | 73,00 |
| ES1865LK | 2-44 | 89,23 |
| ES1865MFK | 2-42 | 64,83 |
| ES1865SPK | 2-36 | 61,23 |
| ES1865VK | 2-37 | 68,00 |
| ES1866CK | 2-44 | 93,11 |
| ES1866K | 2-32 | 71,00 |
| ES1866LK | 2-44 | 91,91 |
| ES1866MFK | 2-42 | 67,50 |
| ES1866PCK | 2-45 | 92,00 |
| ES1866SPK | 2-36 | 63,91 |
| ES1866VK | 2-37 | 70,00 |
| ES1868CK | 2-44 | 98,44 |
| ES1868K | 2-33 | 84,24 |
| ES1868LK | 2-44 | 97,24 |
| ES1868MFK | 2-42 | 72,83 |
| ES1868PCK | 2-45 | 98,00 |
| ES1868VK | 2-37 | 81,36 |
| ES1875BK | 2-34 | 161,78 |
| ES1875K | 2-35 | 161,78 |
| ES1876BK | 2-34 | 169,73 |
| ES1876K | 2-35 | 169,73 |
| ES1878BK | 2-34 | 175,65 |
| ES1878K | 2-35 | 175,65 |
| ES1880K | 2-33 | 106,66 |
| ES1880MF2K | 2-42 | 104,14 |
| ES1880MFK | 2-42 | 96,92 |
| ES1880VK | 2-37 | 102,83 |
| ES1884CK | 2-44 | 102,47 |
| ES1884FV2K | 2-38 | 97,16 |
| ES1884K | 2-32 | 82,00 |
| ES1884LK | 2-44 | 101,27 |
| ES1884MF2K | 2-42 | 85,75 |
| ES1884MF2K | 2-129 | 85,75 |
| ES1884MFK | 2-42 | 70,57 |
| ES1884SPK | 2-36 | 73,27 |
| ES1884VC2K | 2-40 | 94,27 |
| ES1884VK | 2-37 | 84,44 |
| ES1885CK | 2-44 | 105,65 |
| ES1885FV2K | 2-38 | 100,34 |
| ES1885K | 2-32 | 91,45 |
| ES1885LK | 2-44 | 104,45 |
| ES1885MF2K | 2-42 | 88,93 |
| ES1885MFK | 2-42 | 73,76 |
| ES1885VC2K | 2-40 | 97,46 |
| ES1885VK | 2-37 | 80,00 |
| ES1886CK | 2-44 | 108,83 |
| ES1886FV2K | 2-38 | 103,52 |
| ES1886K | 2-33 | 84,00 |
| ES1886LK | 2-44 | 107,63 |
| ES1886MF2K | 2-42 | 76,94 |
| ES1886MFK | 2-42 | 76,94 |
| ES1886SPK | 2-36 | 79,63 |
| ES1886VC2K | 2-40 | 100,64 |
| ES1886VK | 2-37 | 83,00 |
| ES1888CK | 2-44 | 115,18 |
| ES1888FV2K | 2-38 | 109,86 |
| ES1888K | 2-33 | 100,98 |
| ES1888LK | 2-44 | 113,98 |
| ES1888MF2K | 2-42 | 98,46 |
| ES1888MFK | 2-42 | 83,28 |
| ES1888VC2K | 2-40 | 106,98 |
| ES1888VK | 2-37 | 87,04 |
| ES2000K | 2-33 | 132,74 |
| ES2000MF2K | 2-43 | 128,54 |
| ES2000MF4K | 2-43 | 134,81 |
| ES2000VK | 2-37 | 129,71 |
| ES2004FV2K | 2-39 | 123,06 |
| ES2004FV4K | 2-39 | 124,07 |
| ES2004K | 2-33 | 110,76 |
| ES2004MF2K | 2-42 | 103,59 |
| ES2004MF4K | 2-42 | 109,85 |
| ES2004VC2K | 2-40 | 118,85 |
| ES2004VC4K | 2-40 | 119,23 |
| ES2004VK | 2-37 | 108,03 |
| ES2005FV2K | 2-39 | 127,11 |
| ES2005FV4K | 2-39 | 128,08 |
| ES2005MF2K | 2-42 | 107,65 |
| ES2005MF4K | 2-42 | 113,91 |
| ES2005VC2K | 2-40 | 122,91 |
| ES2005VC4K | 2-40 | 123,29 |
| ES2005VK | 2-37 | 112,09 |
| ES2006FV2K | 2-39 | 131,17 |
| ES2006FV4K | 2-39 | 122,78 |
| ES2006K | 2-33 | 118,14 |
| ES2006K | 2-127 | 118,14 |
| ES2006MF2K | 2-43 | 111,71 |
| ES2006MF4K | 2-43 | 117,97 |
| ES2006VC2K | 2-40 | 126,96 |
| ES2006VC4K | 2-40 | 127,34 |
| ES2006VK | 2-37 | 116,15 |
| ES2007K | 2-33 | 114,45 |
| ES2008FV2K | 2-39 | 123,82 |
| ES2008FV4K | 2-39 | 124,72 |
| ES2008K | 2-33 | 125,49 |
| ES2008MF2K | 2-43 | 119,80 |
| ES2008MF4K | 2-43 | 126,06 |
| ES2008VC2K | 2-40 | 135,05 |
| ES2008VC4K | 2-40 | 135,43 |
| ES2008VK | 2-37 | 113,11 |
| ES2010BK | 2-34 | 135,37 |
| ES2010K | 2-35 | 135,37 |
| ES2014BK | 2-34 | 112,87 |
| ES2014K | 2-35 | 112,87 |
| ES2015BK | 2-34 | 115,28 |
| ES2015K | 2-35 | 115,28 |
| ES2016BK | 2-34 | 120,07 |
| ES2016K | 2-35 | 120,07 |
| ES2018BK | 2-34 | 126,30 |
| ES2018K | 2-35 | 126,30 |
| ES2024BK | 2-34 | 140,49 |
| ES2024FV4K | 2-39 | 141,11 |
| ES2024K | 2-35 | 140,49 |
| ES2024MF4K | 2-42 | 121,65 |
| ES2024VC4K | 2-40 | 136,90 |
| ES2024VK | 2-38 | 137,38 |
| ES2025BK | 2-34 | 144,66 |
| ES2025FV4K | 2-39 | 145,70 |
| ES2025K | 2-35 | 144,66 |
| ES2025MF4K | 2-43 | 126,23 |
| ES2025VC4K | 2-40 | 141,49 |
| ES2025VK | 2-38 | 141,97 |
| ES2026BK | 2-34 | 148,88 |
| ES2026FV4K | 2-39 | 150,33 |
| ES2026K | 2-35 | 148,88 |
| ES2026K | 2-128 | 148,88 |
| ES2026MF4K | 2-43 | 130,87 |
| ES2026VC4K | 2-40 | 146,12 |
| ES2026VK | 2-38 | 146,60 |
| ES2028BK | 2-34 | 157,22 |
| ES2028FV4K | 2-39 | 144,51 |

# List of codes

## IS2 - IS2 EMC enclosures

| Oder code | Page | Weight Kg |
|---|---|---|
| ES2028K | 2-35 | 157,22 |
| ES2028MF4K | 2-43 | 140,05 |
| ES2028VC4K | 2-40 | 155,30 |
| ES2028VK | 2-38 | 155,78 |
| ES2040K | 2-33 | 73,94 |
| ES2044K | 2-33 | 62,96 |
| ES2045K | 2-33 | 65,13 |
| ES2046K | 2-33 | 67,30 |
| ES2048K | 2-33 | 71,62 |
| ES2060K | 2-33 | 93,59 |
| ES2060MFK | 2-43 | 91,20 |
| ES2060VK | 2-37 | 96,70 |
| ES2064CK | 2-45 | 88,90 |
| ES2064K | 2-33 | 78,89 |
| ES2064LK | 2-44 | 87,58 |
| ES2064MFK | 2-42 | 68,36 |
| ES2064SPK | 2-36 | 73,89 |
| ES2064VK | 2-37 | 77,74 |
| ES2065CK | 2-45 | 99,47 |
| ES2065K | 2-33 | 81,57 |
| ES2065K | 2-126 | 81,57 |
| ES2065LK | 2-44 | 98,15 |
| ES2065MFK | 2-42 | 71,31 |
| ES2065SPK | 2-36 | 66,57 |
| ES2065VK | 2-37 | 80,68 |
| ES2065VK | 2-131 | 80,68 |
| ES2066CK | 2-45 | 102,42 |
| ES2066EMCK | 2-140 | 85,10 |
| ES2066K | 2-33 | 84,25 |
| ES2066K | 2-127 | 84,25 |
| ES2066LK | 2-44 | 101,10 |
| ES2066MFK | 2-43 | 74,25 |
| ES2066PCK | 2-45 | 101,20 |
| ES2066PCK | 2-129 | 101,20 |
| ES2066SPK | 2-36 | 79,25 |
| ES2066VEMCK | 2-140 | 85,10 |
| ES2066VK | 2-37 | 83,63 |
| ES2068CK | 2-45 | 108,28 |
| ES2068EMCK | 2-140 | 89,58 |
| ES2068K | 2-33 | 89,58 |
| ES2068LK | 2-44 | 106,96 |
| ES2068MFK | 2-43 | 93,20 |
| ES2068PCK | 2-45 | 107,80 |
| ES2068VEMCK | 2-140 | 89,58 |
| ES2068VK | 2-37 | 89,49 |
| ES2075BK | 2-34 | 161,38 |
| ES2075K | 2-35 | 161,38 |
| ES2076BK | 2-34 | 169,33 |
| ES2076K | 2-35 | 169,33 |
| ES2076K | 2-128 | 169,33 |
| ES2078BK | 2-34 | 175,26 |
| ES2078K | 2-35 | 175,26 |
| ES2080K | 2-33 | 113,22 |
| ES2080MF2K | 2-43 | 114,56 |
| ES2080MFK | 2-43 | 106,61 |
| ES2080VK | 2-37 | 113,11 |
| ES2084CK | 2-45 | 112,71 |
| ES2084FV2K | 2-39 | 106,87 |
| ES2084K | 2-33 | 94,83 |
| ES2084LK | 2-44 | 111,39 |
| ES2084MF2K | 2-42 | 94,33 |
| ES2084MFK | 2-42 | 77,63 |
| ES2084SPK | 2-36 | 89,83 |
| ES2084VC2K | 2-40 | 103,70 |
| ES2084VK | 2-37 | 92,88 |
| ES2085CK | 2-45 | 116,22 |
| ES2085FV2K | 2-39 | 110,37 |
| ES2085K | 2-33 | 98,01 |
| ES2085LK | 2-44 | 114,90 |
| ES2085MF2K | 2-42 | 97,83 |
| ES2085MFK | 2-42 | 81,13 |
| ES2085SPK | 2-36 | 83,01 |
| ES2085VC2K | 2-40 | 107,20 |
| ES2085VK | 2-37 | 96,39 |
| ES2085VK | 2-131 | 96,39 |
| ES2086CK | 2-45 | 119,72 |
| ES2086EMCK | 2-140 | 101,19 |
| ES2086FV2K | 2-39 | 113,87 |
| ES2086K | 2-33 | 101,19 |
| ES2086K | 2-127 | 101,19 |
| ES2086K | 2-128 | 101,19 |
| ES2086LK | 2-44 | 118,40 |
| ES2086MF2K | 2-43 | 101,33 |
| ES2086MFK | 2-43 | 84,63 |
| ES2086SPK | 2-36 | 86,19 |
| ES2086VC2K | 2-40 | 110,70 |
| ES2086VEMCK | 2-140 | 101,19 |
| ES2086VK | 2-37 | 99,89 |
| ES2088CK | 2-45 | 126,69 |
| ES2088FV2K | 2-39 | 120,85 |
| ES2088LK | 2-44 | 125,37 |
| ES2088MF2K | 2-43 | 108,30 |
| ES2088MFK | 2-43 | 91,61 |
| ES2088VC2K | 2-40 | 117,68 |
| ES2088VK | 2-37 | 95,74 |
| ES2089EMCK | 2-140 | 107,54 |
| ES2089K | 2-33 | 107,54 |
| ES2089SPK | 2-36 | 92,54 |
| ES2089VEMCK | 2-140 | 107,54 |
| ES2200K | 2-33 | 145,80 |
| ES2200MF2K | 2-43 | 141,40 |
| ES2200MF4K | 2-43 | 148,29 |
| ES2200VK | 2-37 | 142,20 |
| ES2204FV2K | 2-39 | 135,36 |
| ES2204FV4K | 2-39 | 135,10 |
| ES2204K | 2-33 | 121,84 |
| ES2204MF2K | 2-43 | 113,95 |
| ES2204MF4K | 2-43 | 120,84 |
| ES2204VC2K | 2-41 | 130,73 |
| ES2204VC4K | 2-41 | 131,15 |
| ES2204VK | 2-37 | 118,84 |
| ES2205FV2K | 2-39 | 139,83 |
| ES2205FV4K | 2-39 | 126,61 |
| ES2205K | 2-33 | 125,90 |
| ES2205MF2K | 2-43 | 118,41 |
| ES2205MF4K | 2-43 | 125,30 |
| ES2205VC2K | 2-41 | 135,20 |
| ES2205VC4K | 2-41 | 135,61 |
| ES2205VK | 2-37 | 123,30 |
| ES2206FV2K | 2-39 | 144,29 |
| ES2206FV4K | 2-39 | 145,00 |
| ES2206K | 2-33 | 129,95 |
| ES2206MF2K | 2-43 | 122,88 |
| ES2206MF4K | 2-43 | 129,77 |
| ES2206VC2K | 2-41 | 139,66 |
| ES2206VC4K | 2-41 | 140,08 |
| ES2206VK | 2-37 | 127,76 |
| ES2208FV2K | 2-39 | 139,80 |
| ES2208FV4K | 2-39 | 140,76 |
| ES2208K | 2-33 | 138,04 |
| ES2208MF2K | 2-43 | 131,78 |
| ES2208MF4K | 2-43 | 138,66 |
| ES2208VC2K | 2-41 | 148,56 |
| ES2208VC4K | 2-41 | 148,98 |
| ES2208VK | 2-37 | 124,43 |
| ES2210BK | 2-34 | 148,90 |
| ES2210K | 2-35 | 148,90 |
| ES2214BK | 2-34 | 122,40 |
| ES2214K | 2-35 | 122,40 |
| ES2215BK | 2-34 | 126,70 |
| ES2215K | 2-35 | 126,70 |
| ES2216BK | 2-34 | 131,12 |
| ES2216K | 2-35 | 131,12 |
| ES2218BK | 2-34 | 139,20 |
| ES2218K | 2-35 | 139,20 |
| ES2224BK | 2-34 | 154,54 |
| ES2224FV4K | 2-39 | 155,22 |
| ES2224K | 2-35 | 154,54 |
| ES2224MF4K | 2-43 | 133,81 |
| ES2224VC4K | 2-41 | 150,59 |

# List of codes

## IS2 - IS2 EMC enclosures

| Oder code | Page | Weight Kg |
|---|---|---|
| ES2224VK | 2-38 | 151,12 |
| ES2225BK | 2-34 | 159,13 |
| ES2225FV4K | 2-39 | 160,27 |
| ES2225K | 2-35 | 159,13 |
| ES2225MF4K | 2-43 | 138,85 |
| ES2225VC4K | 2-41 | 155,64 |
| ES2225VK | 2-38 | 156,17 |
| ES2226BK | 2-34 | 163,76 |
| ES2226FV4K | 2-39 | 165,36 |
| ES2226K | 2-35 | 163,76 |
| ES2226MF4K | 2-43 | 143,95 |
| ES2226VC4K | 2-41 | 160,74 |
| ES2226VK | 2-38 | 161,27 |
| ES2228BK | 2-34 | 172,94 |
| ES2228FV4K | 2-39 | 158,96 |
| ES2228K | 2-35 | 172,94 |
| ES2228MF4K | 2-43 | 154,05 |
| ES2228VC4K | 2-41 | 170,83 |
| ES2228VK | 2-38 | 171,36 |
| ES2240K | 2-33 | 81,33 |
| ES2244K | 2-33 | 69,25 |
| ES2245K | 2-33 | 71,64 |
| ES2246K | 2-33 | 74,03 |
| ES2248K | 2-33 | 78,79 |
| ES2260K | 2-33 | 102,95 |
| ES2260MFK | 2-43 | 88,15 |
| ES2260VK | 2-37 | 103,30 |
| ES2264CK | 2-45 | 97,79 |
| ES2264K | 2-33 | 86,78 |
| ES2264LK | 2-44 | 96,34 |
| ES2264MFK | 2-43 | 75,20 |
| ES2264VK | 2-37 | 85,51 |
| ES2265CK | 2-45 | 109,42 |
| ES2265K | 2-33 | 89,73 |
| ES2265LK | 2-44 | 107,97 |
| ES2265MFK | 2-43 | 78,44 |
| ES2265VK | 2-37 | 88,75 |
| ES2266CK | 2-45 | 112,66 |
| ES2266K | 2-33 | 92,67 |
| ES2266LK | 2-44 | 111,21 |
| ES2266MFK | 2-43 | 81,68 |
| ES2266PCK | 2-45 | 111,32 |
| ES2266VK | 2-37 | 91,99 |
| ES2268CK | 2-45 | 119,11 |
| ES2268K | 2-33 | 98,54 |
| ES2268LK | 2-44 | 117,66 |
| ES2268MFK | 2-43 | 93,19 |
| ES2268PCK | 2-45 | 118,58 |
| ES2268VK | 2-37 | 98,44 |
| ES2275BK | 2-34 | 177,52 |
| ES2275K | 2-35 | 177,52 |
| ES2276BK | 2-34 | 186,27 |
| ES2276K | 2-35 | 186,27 |
| ES2279BK | 2-34 | 192,78 |
| ES2279K | 2-35 | 192,78 |
| ES2280K | 2-33 | 124,54 |
| ES2280MFK | 2-43 | 91,73 |
| ES2280VK | 2-37 | 124,43 |
| ES2281MF2K | 2-43 | 135,80 |
| ES2284CK | 2-45 | 123,98 |
| ES2284FV2K | 2-39 | 117,56 |
| ES2284K | 2-33 | 104,31 |
| ES2284LK | 2-44 | 122,53 |
| ES2284MF2K | 2-43 | 103,76 |
| ES2284MFK | 2-43 | 85,39 |
| ES2284VC2K | 2-41 | 114,07 |
| ES2284VK | 2-37 | 102,17 |
| ES2285CK | 2-45 | 127,84 |
| ES2285FV2K | 2-39 | 121,41 |
| ES2285K | 2-33 | 107,81 |
| ES2285LK | 2-44 | 126,38 |
| ES2285MF2K | 2-43 | 107,61 |
| ES2285MFK | 2-43 | 89,24 |
| ES2285VC2K | 2-41 | 117,92 |
| ES2285VK | 2-37 | 106,03 |
| ES2286CK | 2-45 | 131,69 |
| ES2286FV2K | 2-39 | 125,26 |
| ES2286LK | 2-44 | 130,24 |
| ES2286MF2K | 2-43 | 111,46 |
| ES2286MFK | 2-43 | 93,09 |
| ES2286VC2K | 2-41 | 121,77 |
| ES2286VK | 2-37 | 109,88 |
| ES2287K | 2-33 | 111,31 |
| ES2288CK | 2-45 | 139,36 |
| ES2288FV2K | 2-39 | 132,94 |
| ES2288K | 2-33 | 118,29 |
| ES2288LK | 2-44 | 137,91 |
| ES2288MF2K | 2-43 | 119,14 |
| ES2288MFK | 2-43 | 100,77 |
| ES2288VC2K | 2-41 | 129,45 |
| ES2288VK | 2-37 | 105,32 |
| ET1810K | 2-49 | 27,03 |
| ET1860K | 2-49 | 16,33 |
| ET1880K | 2-49 | 21,68 |
| ET2010K | 2-49 | 29,99 |
| ET2060EMCKM | 2-140 | 26,60 |
| ET2060K | 2-49 | 18,13 |
| ET2080EMCKM | 2-140 | 28,31 |
| ET2080K | 2-49 | 24,06 |
| ET2211K | 2-49 | 32,96 |
| ET2260K | 2-49 | 19,92 |
| ET2280K | 2-49 | 26,44 |
| ET2280K | 2-133 | 26,44 |
| EV0001 | 2-115 | 1,89 |
| EV0002 | 2-74 | 1,78 |
| EV0003 | 2-74 | 0,24 |
| EV0003 | 2-127 | 0,24 |
| EV0003 | 2-128 | 0,24 |
| EV0004 | 2-85 | 0,45 |
| EV0005 | 2-108 | 0,23 |
| EV0006 | 2-74 | 1,22 |
| EV0006EMC | 2-141 | 0,74 |
| EV0007 | 2-85 | 2,25 |
| EV0008 | 2-74 | 0,16 |
| EV0020 | 2-88 | 0,62 |
| EV0021 | 2-88 | 0,72 |
| EV0022 | 2-88 | 0,90 |
| EV0024 | 2-89 | 0,50 |
| EV0026 | 2-89 | 0,35 |
| EV0035 | 2-89 | 0,75 |
| EV0036 | 2-89 | 0,20 |
| EV0037 | 2-89 | 0,35 |
| EV0041 | 2-88 | 6,85 |
| EV0042 | 2-89 | 0,25 |
| EV0050 | 2-57 | 0,35 |
| EV0058 | 2-105 | 5,20 |
| EV0061 | 2-105 | 1,20 |
| EV0063 | 2-109 | 1,10 |
| EV0064 | 2-109 | 1,50 |
| EV0068 | 2-93 | 0,92 |
| EV0069 | 2-93 | 0,92 |
| EV0070 | 2-96 | 0,68 |
| EV0071 | 2-96 | 0,83 |
| EV0081 | 2-89 | 0,35 |
| EV0101 | 2-106 | 0,03 |
| EV0102 | 2-85 | 0,30 |
| EV0102 | 2-115 | 0,30 |
| EV0103 | 2-85 | 0,50 |
| EV0103 | 2-115 | 0,50 |
| EV0104 | 2-85 | 0,50 |
| EV0104 | 2-115 | 0,50 |
| EV0108 | 2-93 | 0,55 |
| EV0109 | 2-93 | 0,75 |
| EV0110 | 2-93 | 0,40 |
| EV0111 | 2-93 | 0,35 |
| EV0112 | 2-93 | 0,95 |
| EV0114 | 2-58 | 0,95 |
| EV0116 | 2-58 | 0,95 |
| EV0117 | 2-58 | 0,75 |
| EV0118 | 2-47 | 16,12 |

# List of codes

## IS2 - IS2 EMC enclosures

| Oder code | Page | Weight Kg |
|---|---|---|
| EV0119 | 2-58 | 0,20 |
| EV0120 | 2-47 | 17,87 |
| EV0121 | 2-58 | 0,20 |
| EV0122 | 2-47 | 19,35 |
| EV0123 | 2-58 | 0,20 |
| EV0124 | 2-58 | 0,20 |
| EV0125 | 2-58 | 0,13 |
| EV0126 | 2-58 | 0,13 |
| EV0127 | 2-58 | 0,13 |
| EV0128 | 2-89 | 0,25 |
| EV0132 | 2-57 | 1,33 |
| EV0133 | 2-57 | 1,50 |
| EV0134 | 2-57 | 1,66 |
| EV0135 | 2-57 | 1,58 |
| EV0136 | 2-57 | 1,75 |
| EV0137 | 2-57 | 1,91 |
| EV0400 | 2-88 | 2,75 |
| EV0600 | 2-88 | 3,90 |
| EV0800 | 2-88 | 5,10 |
| EV1000 | 2-107 | 0,48 |
| EV1001 | 2-98 | 0,70 |
| EV1002 | 2-98 | 1,10 |
| EV1004 | 2-111 | 0,29 |
| EV1005 | 2-111 | 0,53 |
| EV1006 | 2-111 | 0,63 |
| EV1007 | 2-111 | 2,75 |
| EV1008 | 2-106 | 0,04 |
| EV1008 | 2-113 | 0,04 |
| EV1030 | 2-106 | 0,30 |
| EV1030 | 2-113 | 0,30 |
| EV1036 | 2-106 | 0,04 |
| EV1037 | 2-106 | 0,04 |
| EV1039 | 2-106 | 0,04 |
| EV1039 | 2-113 | 0,04 |
| EV1040 | 2-98 | 0,37 |
| EV1041 | 2-98 | 1,10 |
| EV1042 | 2-98 | 0,24 |
| EV1043 | 2-98 | 0,75 |
| EV1044 | 2-98 | 0,11 |
| EV1045 | 2-98 | 0,24 |
| EV1047 | 2-98 | 0,48 |
| EV1048 | 2-98 | 0,53 |
| EV1049 | 2-98 | 0,06 |
| EV1050 | 2-110 | 6,88 |
| EV1051 | 2-110 | 1,00 |
| EV1056 | 2-110 | 0,33 |
| EV1057 | 2-115 | 1,25 |
| EV1058 | 2-110 | 0,58 |
| EV1060K | 2-108 | 1,62 |
| EV1061K | 2-108 | 2,39 |
| EV1071K | 2-108 | 1,57 |
| EV1072K | 2-108 | 2,10 |
| EV1073K | 2-108 | 2,62 |
| EV1075K | 2-108 | 0,20 |
| EV1081 | 2-107 | 2,34 |
| EV1082 | 2-107 | 1,96 |
| EV1083 | 2-107 | 2,26 |
| EV1085 | 2-107 | 4,51 |
| EV1087 | 2-107 | 8,68 |
| EV1090 | 2-96 | 0,46 |
| EV1091 | 2-96 | 0,88 |
| EV1092 | 2-96 | 0,55 |
| EV1093 | 2-96 | 0,55 |
| EV1100 | 2-92 | 1,15 |
| EV1100 | 2-115 | 1,15 |
| EV1101 | 2-92 | 1,28 |
| EV1101 | 2-115 | 1,28 |
| EV1102 | 2-115 | 3,10 |
| EV1103 | 2-115 | 1,20 |
| EV1110 | 2-96 | 2,74 |
| EV1111 | 2-96 | 0,68 |
| EV1112 | 2-96 | 2,74 |
| EV1113 | 2-96 | 0,13 |
| EV1115 | 2-92 | 0,65 |
| EV1116 | 2-92 | 0,75 |
| EV1117 | 2-92 | 0,67 |
| EV1118 | 2-92 | 0,96 |
| EV1119 | 2-92 | 3,60 |
| EV1120 | 2-92 | 4,50 |
| EV1121 | 2-92 | 8,85 |
| EV1122 | 2-92 | 2,44 |
| EV1123 | 2-92 | 2,49 |
| EV1124 | 2-92 | 2,77 |
| EV1125 | 2-92 | 2,77 |
| EV1130 | 2-92 | 1,04 |
| EV1131 | 2-92 | 5,89 |
| EV1135 | 2-82 | 0,24 |
| EV1136 | 2-82 | 0,16 |
| EV1137 | 2-82 | 0,24 |
| EV1140 | 2-99 | 0,19 |
| EV1143 | 2-99 | 0,08 |
| EV1144 | 2-99 | 0,08 |
| EV1144 | 2-99 | 0,08 |
| EV1145 | 2-99 | 0,08 |
| EV1145 | 2-99 | 0,08 |
| EV1146 | 2-99 | 0,02 |
| EV1147 | 2-99 | 0,36 |
| EV1148 | 2-99 | 0,36 |
| EV1150 | 2-112 | 0,10 |
| EV1151 | 2-112 | 0,10 |
| EV1152 | 2-112 | 0,10 |
| EV1153 | 2-112 | 0,10 |
| EV1154 | 2-112 | 0,10 |
| EV1155 | 2-112 | 0,01 |
| EV1156 | 2-112 | 0,07 |
| EV1157 | 2-112 | 0,24 |
| EV1160 | 2-108 | 0,85 |
| EV1385 | 2-89 | 2,65 |
| EV1802 | 2-113 | 1,74 |
| EV2002 | 2-113 | 1,93 |
| EV2110 | 2-96 | 0,56 |
| EV2112 | 2-96 | 0,56 |
| EV2202 | 2-113 | 2,12 |
| EV2385 | 2-89 | 4,20 |
| EV3500 | 2-88 | 3,33 |
| EV5000 | 2-88 | 4,52 |
| EV6130 | 2-85 | 0,22 |
| EV6130 | 2-115 | 0,22 |
| EV6131 | 2-85 | 0,22 |
| EV6131 | 2-115 | 0,22 |
| EV8880 | 2-107 | 2,24 |
| EV8881 | 2-107 | 5,78 |
| EV8882 | 2-107 | 6,74 |
| EX1860 | 2-79 | 21,56 |
| EX1880 | 2-79 | 30,18 |
| EX1880 | 2-130 | 30,18 |
| EX2060 | 2-79 | 23,96 |
| EX2080 | 2-79 | 33,54 |
| EX2260 | 2-79 | 26,35 |
| EX2280 | 2-79 | 36,89 |
| EZ1001 | 2-60 | 21,65 |
| EZ1201 | 2-60 | 26,00 |
| EZ1601 | 2-60 | 34,65 |
| EZ4001 | 2-60 | 8,67 |
| EZ6001 | 2-60 | 13,00 |
| EZ8001 | 2-60 | 17,35 |
| GD1520 | 2-79 | 0,80 |
| GD1530 | 2-79 | 1,79 |
| GD1530 | 2-130 | 1,79 |
| PB0803 | 2-90 | 0,40 |
| PB1603 | 2-90 | 1,11 |
| PBFC1001 | 2-91 | 15,50 |
| PBFC1005 | 2-91 | 7,26 |
| PBFC3205 | 2-91 | 2,38 |
| PBFC5005 | 2-91 | 3,50 |
| PBFC6305 | 2-91 | 4,46 |
| PIRH0405 | 2-106 | 1,00 |
| PIRH0455 | 2-106 | 1,00 |
| PIRH1242 | 2-106 | 1,00 |
| PIRH2432 | 2-106 | 1,02 |

# List of codes

## IS2 - IS2 EMC enclosures

| Oder code | Page | Weight Kg |
|---|---|---|
| TS4000 | 2-96 | 1,47 |
| TS4001 | 2-96 | 2,50 |
| TS4002 | 2-96 | 2,00 |
| TS4003 | 2-96 | 2,00 |
| TS4004 | 2-96 | 5,38 |
| TS4011 | 2-96 | 2,00 |
| TS4012 | 2-96 | 2,00 |
| TS4013 | 2-96 | 2,00 |
| TU1000 | 2-111 | 15,17 |
| TU1001 | 2-111 | 15,17 |
| VA7910 | 2-100 | 0,40 |
| VA7915 | 2-100 | 0,55 |
| VA7930 | 2-100 | 0,30 |
| VA7950 | 2-100 | 0,35 |
| VA7975 | 2-100 | 0,45 |
| VA8300 | 2-100 | 0,80 |
| VS4235K | 2-105 | 10,00 |
| VS6285K | 2-105 | 28,00 |
| VZ1400K | 2-104 | 36,00 |
| VZ1401K | 2-105 | 34,00 |
| VZ1550K | 2-104 | 35,00 |
| VZ1850K | 2-104 | 35,00 |
| VZ2000K | 2-104 | 50,20 |
| VZ8501K | 2-105 | 33,00 |
| ZN0006 | 2-59 | 2,08 |
| ZN0006 | 2-59 | 2,08 |
| ZN0008 | 2-59 | 2,78 |
| ZN0008 | 2-59 | 2,78 |
| ZN0010 | 2-59 | 3,48 |
| ZN1000 | 2-59 | 3,48 |
| ZN1000 | 2-127 | 3,48 |
| ZN1000 | 2-130 | 3,48 |
| ZN1000 | 2-132 | 3,48 |
| ZN1000 | 2-133 | 3,48 |
| ZN1001 | 2-59 | 2,45 |
| ZN1002 | 2-60 | 6,06 |
| ZN1010 | 2-59 | 3,83 |
| ZN1020 | 2-59 | 2,38 |
| ZN1040 | 2-60 | 1,04 |
| ZN1041 | 2-60 | 1,50 |
| ZN1200 | 2-59 | 4,18 |
| ZN3000 | 2-59 | 1,04 |
| ZN4000 | 2-59 | 1,39 |
| ZN4000 | 2-129 | 1,39 |
| ZN4000 | 2-129 | 1,39 |
| ZN4000 | 2-130 | 1,39 |
| ZN4000 | 2-130 | 1,39 |
| ZN4000 | 2-130 | 1,39 |
| ZN4001 | 2-59 | 0,66 |
| ZN4002 | 2-60 | 2,41 |

| Oder code | Page | Weight Kg |
|---|---|---|
| ZN5000 | 2-59 | 1,74 |
| ZN5000 | 2-126 | 1,74 |
| ZN5000 | 2-126 | 1,74 |
| ZN5000 | 2-131 | 1,74 |
| ZN5000 | 2-131 | 1,74 |
| ZN5000 | 2-132 | 1,74 |
| ZN5001 | 2-59 | 0,96 |
| ZN5002 | 2-60 | 3,02 |
| ZN6000 | 2-59 | 2,08 |
| ZN6000 | 2-59 | 2,08 |
| ZN6000 | 2-126 | 2,08 |
| ZN6000 | 2-126 | 2,08 |
| ZN6000 | 2-127 | 2,08 |
| ZN6000 | 2-127 | 2,08 |
| ZN6000 | 2-128 | 2,08 |
| ZN6000 | 2-128 | 2,08 |
| ZN6000 | 2-128 | 2,08 |
| ZN6000 | 2-129 | 2,08 |
| ZN6000 | 2-129 | 2,08 |
| ZN6000 | 2-130 | 2,08 |
| ZN6000 | 2-130 | 2,08 |
| ZN6000 | 2-131 | 2,08 |
| ZN6000 | 2-132 | 2,08 |
| ZN6000 | 2-132 | 2,08 |
| ZN6000 | 2-133 | 2,08 |
| ZN6000 | 2-133 | 2,08 |
| ZN6000 | 2-133 | 2,08 |
| ZN6001 | 2-59 | 1,25 |
| ZN6002 | 2-60 | 3,63 |
| ZN6002 | 2-60 | 3,63 |
| ZN8000 | 2-59 | 2,78 |
| ZN8000 | 2-59 | 2,78 |
| ZN8000 | 2-128 | 2,78 |
| ZN8000 | 2-128 | 2,78 |
| ZN8000 | 2-129 | 2,78 |
| ZN8000 | 2-131 | 2,78 |
| ZN8000 | 2-133 | 2,78 |
| ZN8001 | 2-59 | 1,85 |
| ZN8002 | 2-60 | 4,85 |
| ZN8002 | 2-60 | 4,85 |
| ZU1100 | 2-60 | 8,35 |
| ZU1101 | 2-60 | 8,35 |
| ZU2100 | 2-60 | 13,98 |
| ZU2101 | 2-60 | 13,98 |
| ZU1101 | 4–64 | |
| ZU2100 | 4–64 | |
| ZU2101 | 4–64 | |

| Oder code | Page | Weight Kg |
|---|---|---|

# List of codes

## Wiring ducts

| Oder code | Page | Weight Kg |
|---|---|---|
| 05 019 | 3-6 | 0,11 |
| 05 033 | 3-6 | 0,29 |
| 05 035 | 3-6 | 0,33 |
| 05 037 | 3-6 | 0,45 |
| 05 043 | 3-6 | 0,33 |
| 05 045 | 3-6 | 0,40 |
| 05 047 | 3-6 | 0,47 |
| 05 049 | 3-6 | 0,64 |
| 05 051 | 3-6 | 0,88 |
| 05 053 | 3-6 | 0,97 |
| 05 063 | 3-6 | 0,42 |
| 05 065 | 3-6 | 0,49 |
| 05 067 | 3-6 | 0,63 |
| 05 069 | 3-6 | 0,83 |
| 05 071 | 3-6 | 0,94 |
| 05 073 | 3-6 | 1,21 |
| 05 083 | 3-6 | 0,51 |
| 05 085 | 3-6 | 0,57 |
| 05 087 | 3-6 | 0,69 |
| 05 089 | 3-6 | 0,84 |
| 05 091 | 3-6 | 1,04 |
| 05 093 | 3-6 | 1,25 |
| 05 094 | 3-6 | 0,61 |
| 05 095 | 3-6 | 0,66 |
| 05 096 | 3-6 | 0,90 |
| 05 097 | 3-6 | 1,04 |
| 05 098 | 3-6 | 1,10 |
| 05 099 | 3-6 | 1,81 |
| 05 119 | 3-6 | 0,11 |
| 05 133 | 3-6 | 0,29 |
| 05 135 | 3-6 | 0,33 |
| 05 137 | 3-6 | 0,45 |
| 05 143 | 3-6 | 0,33 |
| 05 145 | 3-6 | 0,40 |
| 05 147 | 3-6 | 0,47 |
| 05 149 | 3-6 | 0,64 |
| 05 151 | 3-6 | 0,88 |
| 05 153 | 3-6 | 0,97 |
| 05 163 | 3-6 | 0,42 |
| 05 165 | 3-6 | 0,49 |
| 05 167 | 3-6 | 0,63 |
| 05 169 | 3-6 | 0,83 |
| 05 171 | 3-6 | 0,94 |
| 05 173 | 3-6 | 1,21 |
| 05 183 | 3-6 | 0,51 |
| 05 185 | 3-6 | 0,57 |
| 05 187 | 3-6 | 0,69 |
| 05 189 | 3-6 | 0,84 |
| 05 191 | 3-6 | 1,04 |
| 05 193 | 3-6 | 1,25 |
| 05 194 | 3-6 | 0,61 |
| 05 195 | 3-6 | 0,66 |
| 05 196 | 3-6 | 0,90 |
| 05 197 | 3-6 | 1,04 |
| 05 198 | 3-6 | 1,10 |
| 05 199 | 3-6 | 1,81 |
| 05 214 | 3-9 | 0,01 |
| 05 216 | 3-9 | 0,01 |
| 05 224 | 3-9 | 0,01 |
| 05 226 | 3-9 | 0,01 |
| 05 228 | 3-9 | 0,01 |
| 05 230 | 3-9 | 0,01 |
| 05 240 | 3-9 | 0,00 |
| 05 250 | 3-8 | 0,02 |
| 05 252 | 3-8 | 0,01 |
| 05 254 | 3-8 | 0,01 |
| 05 256 | 3-8 | 0,02 |
| 05 258 | 3-8 | 0,02 |
| 05 260 | 3-8 | 0,02 |
| 05 262 | 3-8 | 0,02 |
| 05 265 | 3-9 | 0,45 |
| 05 266 | 3-9 | 0,45 |
| 05 268 | 3-9 | 0,45 |
| 05 270 | 3-8 | 0,30 |
| 05 272 | 3-8 | 0,20 |
| 05 274 | 3-8 | 0,20 |
| 05 276 | 3-8 | 0,36 |
| 05 278 | 3-8 | 0,36 |
| 05 280 | 3-8 | 0,42 |
| 05 282 | 3-8 | 0,40 |
| 05 300 | 3-6 | 0,03 |
| 05 302 | 3-6 | 0,11 |
| 05 304 | 3-6 | 0,13 |
| 05 306 | 3-6 | 0,24 |
| 05 308 | 3-6 | 0,33 |
| 05 310 | 3-6 | 0,35 |
| 05 312 | 3-6 | 0,42 |
| 05 314 | 3-6 | 0,58 |
| 05 400 | 3-7 | 0,01 |
| 05 402 | 3-7 | 0,01 |
| 05 405 | 3-7 | 0,02 |
| 05 410 | 3-7 | 0,03 |
| 05 415 | 3-7 | 0,04 |
| 05 420 | 3-7 | 0,07 |
| 05 425 | 3-7 | 0,10 |
| 1SL5316A00 | 3-5 | 0,03 |
| 1SL5317A00 | 3-5 | 0,09 |
| 1SL5318A00 | 3-5 | 0,13 |
| 1SL5319A00 | 3-5 | 0,24 |
| 1SL5320A00 | 3-5 | 0,33 |
| 1SL5321A00 | 3-5 | 0,28 |
| 1SL5322A00 | 3-5 | 0,42 |
| 1SL9019A00 | 3-5 | 0,08 |
| 1SL9033A00 | 3-5 | 0,24 |
| 1SL9035A00 | 3-5 | 0,29 |
| 1SL9037A00 | 3-5 | 0,37 |
| 1SL9043A00 | 3-5 | 0,25 |
| 1SL9045A00 | 3-5 | 0,33 |
| 1SL9047A00 | 3-5 | 0,43 |
| 1SL9049A00 | 3-5 | 0,49 |
| 1SL9051A00 | 3-5 | 0,63 |
| 1SL9053A00 | 3-5 | 0,74 |
| 1SL9063A00 | 3-5 | 0,33 |
| 1SL9065A00 | 3-5 | 0,39 |
| 1SL9067A00 | 3-5 | 0,54 |
| 1SL9069A00 | 3-5 | 0,68 |
| 1SL9071A00 | 3-5 | 0,75 |
| 1SL9073A00 | 3-5 | 0,94 |
| 1SL9083A00 | 3-5 | 0,41 |
| 1SL9085A00 | 3-5 | 0,44 |
| 1SL9087A00 | 3-5 | 0,58 |
| 1SL9089A00 | 3-5 | 0,71 |
| 1SL9091A00 | 3-5 | 0,83 |
| 1SL9093A00 | 3-5 | 1,08 |
| 1SL9119A00 | 3-5 | 0,08 |
| 1SL9133A00 | 3-5 | 0,24 |
| 1SL9135A00 | 3-5 | 0,27 |
| 1SL9137A00 | 3-5 | 0,36 |
| 1SL9143A00 | 3-5 | 0,27 |
| 1SL9145A00 | 3-5 | 0,30 |
| 1SL9147A00 | 3-5 | 0,39 |
| 1SL9149A00 | 3-5 | 0,51 |
| 1SL9151A00 | 3-5 | 0,65 |
| 1SL9153A00 | 3-5 | 0,75 |
| 1SL9163A00 | 3-5 | 0,34 |
| 1SL9165A00 | 3-5 | 0,41 |
| 1SL9167A00 | 3-5 | 0,53 |
| 1SL9169A00 | 3-5 | 0,61 |
| 1SL9171A00 | 3-5 | 0,76 |
| 1SL9173A00 | 3-5 | 0,96 |
| 1SL9183A00 | 3-5 | 0,40 |
| 1SL9185A00 | 3-5 | 0,47 |
| 1SL9187A00 | 3-5 | 0,62 |
| 1SL9189A00 | 3-5 | 0,71 |
| 1SL9191A00 | 3-5 | 0,83 |
| 1SL9193A00 | 3-5 | 1,10 |
| AD1009 | 3-9 | 0,08 |
| AD1098 | 3-9 | 0,94 |
| EV1130 | 3-9 | 1,04 |
| EV1131 | 3-9 | 5,77 |

—
**ABB S.p.A**
**Electrification Business - Smart Power**

**ABB SACE Division**
58, Via Italia
I-23846 Garbagnate Monastero (LC)
Phone: +39 031 3570.111
Fax: +39 031 3570.228
**www.abb.com**

Due to possible developments of standards as well as of materials, the characteristics and dimensions specified in this document may only be considered binding after confirmation by ABB SACE.

© Copyright 2019 ABB. All rights reserved.

1STC804013D0208 03/2019