3D Model is the Master Document of Record
Article or Material Must Conform to REACH Procedure S900000 Sec.1b
Article or Material Must Conform to RoHS Procedure S900000 Sec.1
Part Must Conform to S900000 Sec.a Toxicity Procedure
Geometric Dimensioning & Tolerancing per ASME Y14.5-2009

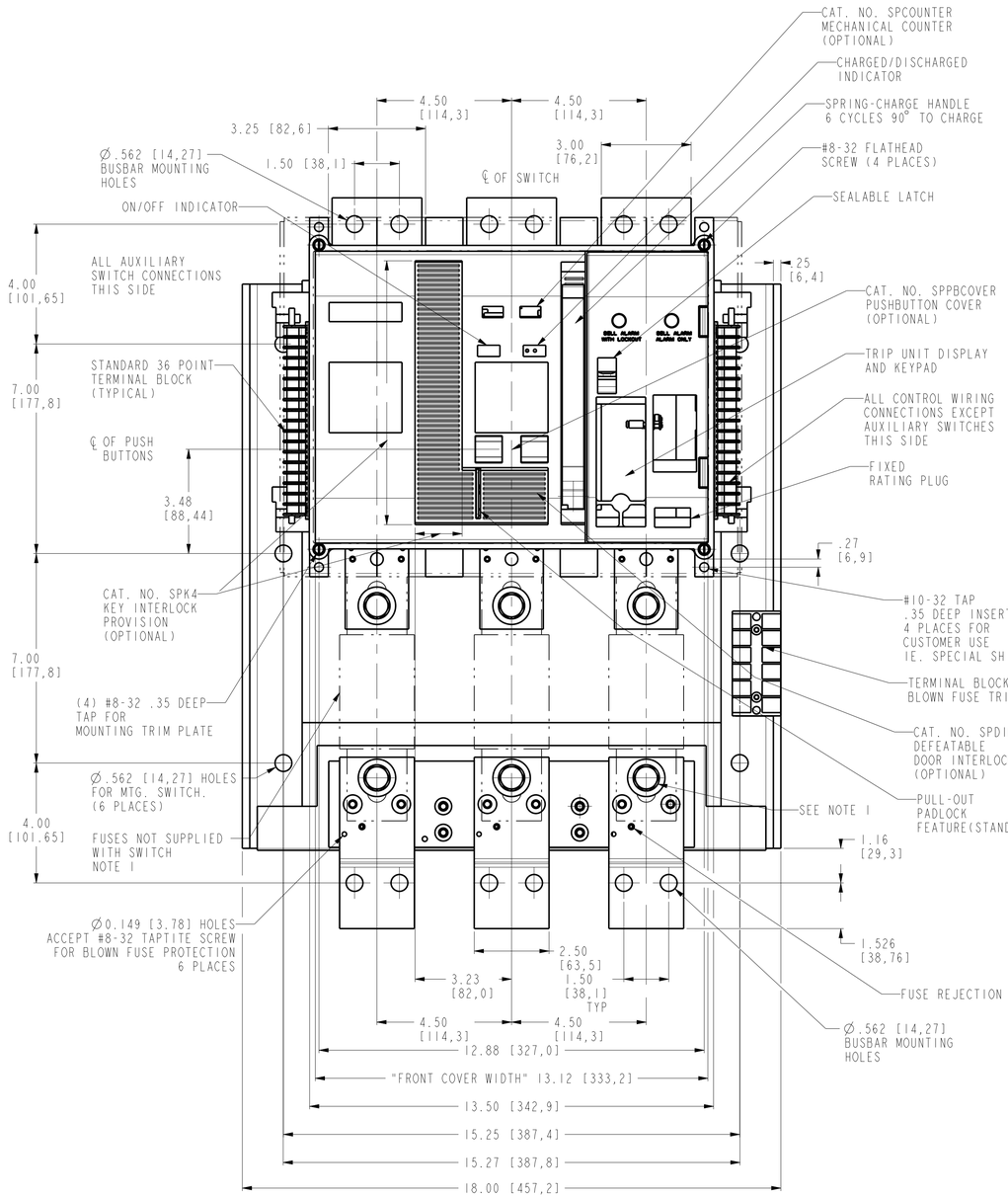

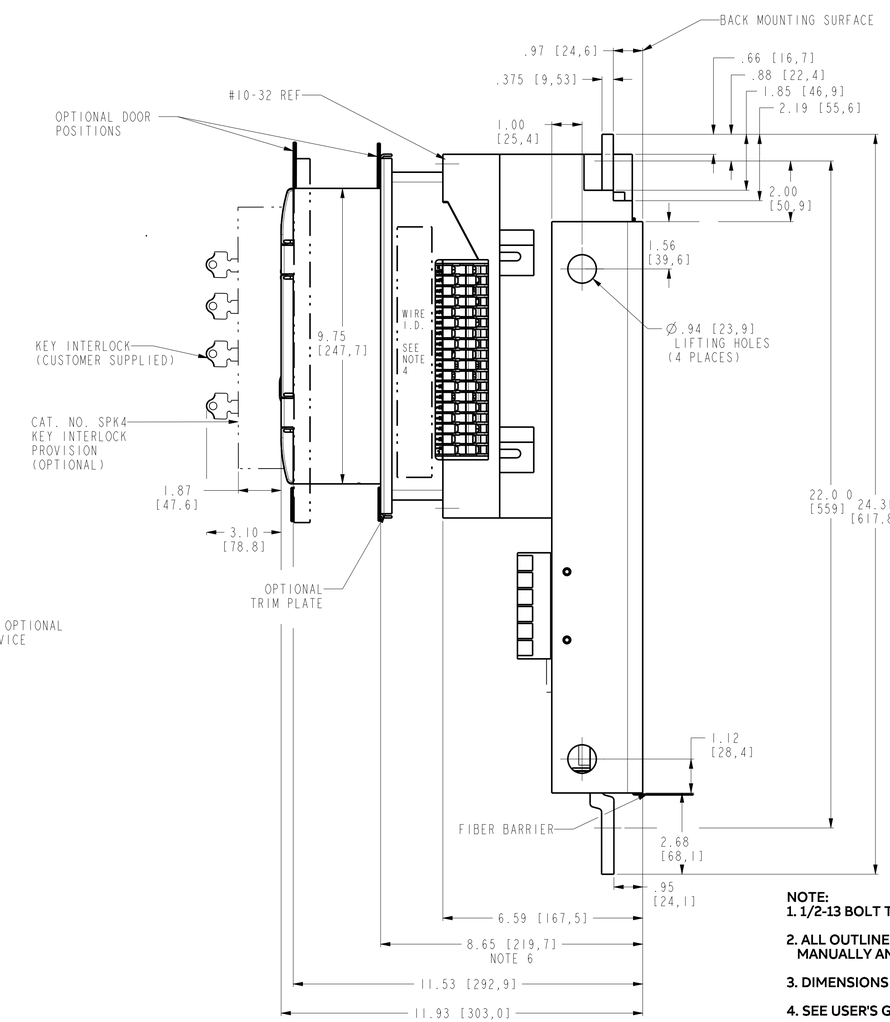

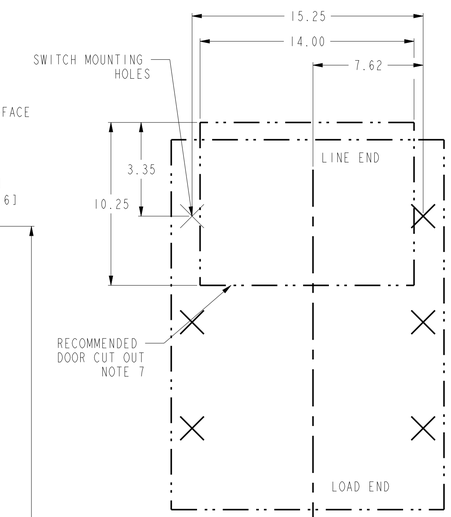

FRONT DETAIL LINE TOP DEVICES.

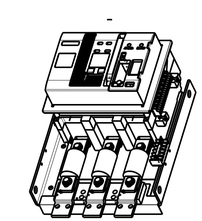

P1

NOTE:
1. 1/2-13 BOLT TYP. FOR FUSE CONNECTIONS SUPPLIED WITH SWITCH.
2. ALL OUTLINE DIMENSIONS ARE SAME FOR MANUALLY AND ELECTRICALLY OPERATED DEVICES.
3. DIMENSIONS ARE IN INCHES[MILLIMETERS].
4. SEE USER'S GUIDE DEH-41689.
5. CROSS REFERENCE TO ROTARY HANDLE THPR SWITCH OUTLINE 139C4219SH1.
6. MATCHES DEPTH OF ROTARY HANDLE THPR SWITCH.
7. CUT-OUT BASED ON USE OF TRIM PLATE

DRAWING FILE 10112083P1	MODEL FILE 10112083G1	ABB	
DATE MODIFIED 01-Oct-20 06:38:39 AM	DESIGNED BY FIROZ		
Calculated for: VOLUME -- --	CN# C095496	APPROVED BY RYAN SPARROW	TITLE OUTLINE- 800A TOP FEED HPC SWITCH THPR23608T
	◇ Critical to Quality Characteristic		
MASS -- --	MATERIAL SPECIFICATION ----	FINISH SPECIFICATION ----	UNITS in / LOCAL TITLE --
UNLESS OTHERWISE SPECIFIED	MATERIAL DESCRIPTION --		SIZE D / ROOT NUMBER 10112083 / REV 3.12 / RELEASE STATE In Work
TOLERANCE ON: 1 PL DECIMALS ± 0.0; 2 PL DECIMALS ± 0.02; 3 PL DECIMALS ± 0.005; ANGLES ± 1.0	FINISH DESCRIPTION --		SCALE 1:10 / PRODUCT LINE HPC / SHEET 1 of 1

ABB PROPRIETARY AND CONFIDENTIAL INFORMATION
The information contained in this document has to be kept strictly confidential.
Unauthorized reproduction, distribution or disclosure to third parties is strictly forbidden.
ABB reserves all rights regarding intellectual Property Rights.
Copyright 2015 ABB. All rights reserved

Third Angle Projection

us_3rd_d.frm