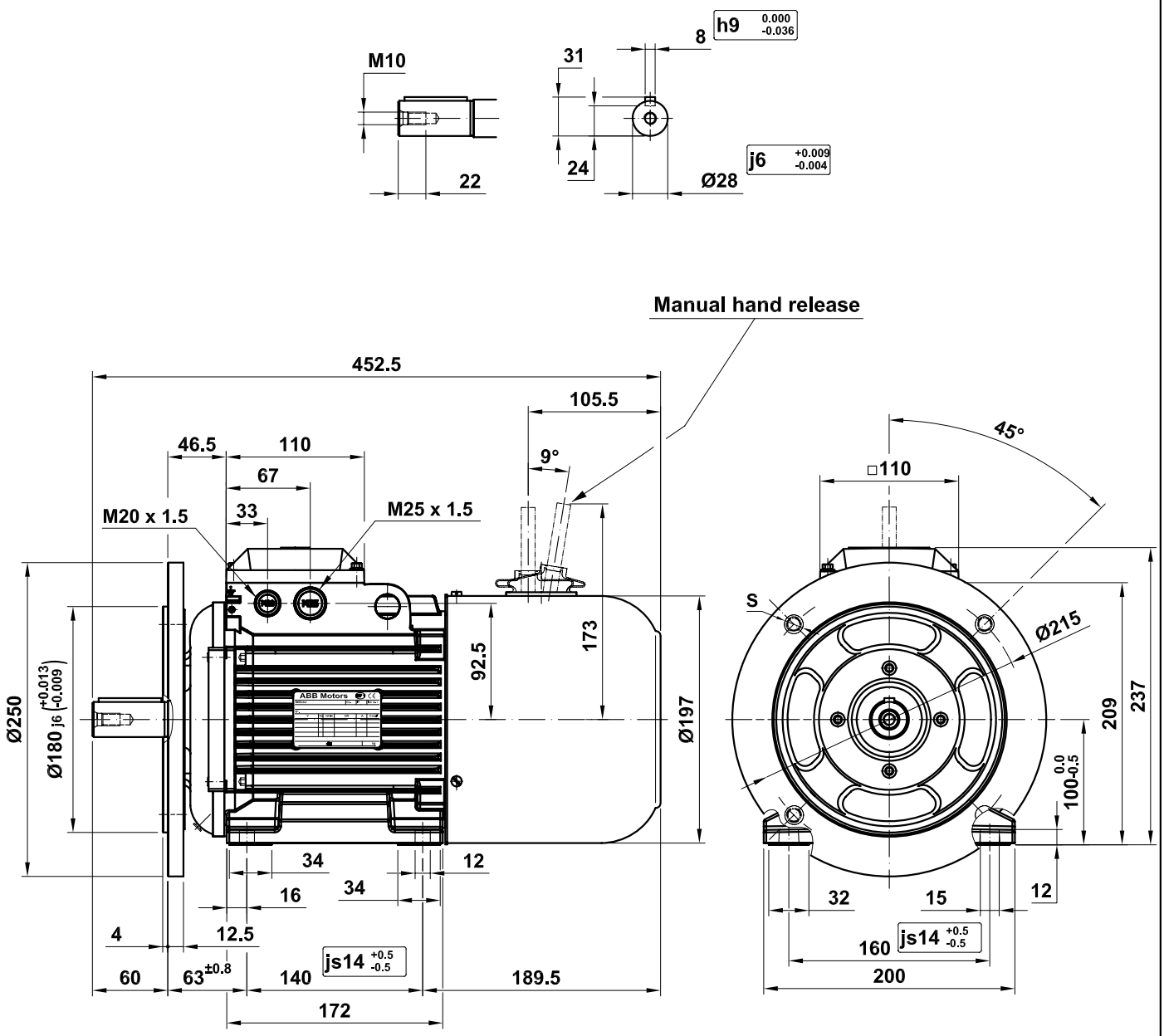

S = { Ø15 – Special IM 2001
M12 – Special IM 2101 }

M3ARF/S 100

(*) Except 100 LD

Motor Dimension Print	Motor Type : M3ARF/S 100 L IM-B35 FF(T)-215 (*)	Document Nº : A1.4935 / 3D: A2.4366

Description :
Brake motor foot and flange mounted special (2-pieces) IM2001 or IM2101

Unit : Discrete Automation&Motion-Fáb. Motores	Issued by : EMD/ G.Gállego	Replaces : To date 2008-05-13
Date : 2010-10-05	Approved by : EMD/ G.Blanes	Replaced by :

Asea Brown Boveri, S.A.

Customer Reference :

ABB