ASEA BROWN BOVERI

FIELD SERVICE
INSTRUCTION BOOKLET
IB 8203

PROCEDURE FOR FIELD TESTING/CALIBRATION
I-T-E K-LINE CIRCUIT BREAKER OVERCURRENT TRIP DEVICES
I-T-E TYPES
OD-3 THROUGH OD-82 (K-225 THROUGH K-2000)
OD-300 THROUGH OD-800 (K-3000 AND K-4000)

ASEA BROWN BOVERI

I. INTRODUCTION

Since the circuit breaker direct acting overcurrent trip device initiates the breaker tripping action that protects both the electrical load and its electrical supply, it is important that this device performs correctly. This procedure should be followed whenever acceptance testing, maintenance testing or calibration is done to check performance. All testing is single phase to insure that each of the overcurrent trip devices operates correctly. Normal variations in ambient temperature (10° - 55°C) have little effect on pickup and short-time delay values. The effect on long-time delay, however, is more noticeable, since the delay is caused by the restriction of oil flow through a predetermined opening. However, over this normal circuit breaker operating temperature range, the long-time delay should still be within the range of the time-current characteristic bands.

Section "III. A." is the recommended field procedure for "non-destructive" TESTING of overcurrent devices. This procedure is to be used normally for ACCEPTANCE TESTING of new equipment as received from the factory. No changes are required to be made in any setting and the Factory Test Certification (if Nuclear Class IE Equipment) remains intact.

How?

(Note that in the factory, the overcurrent devices are calibrated removed from the circuit breaker and in a special fixture. This should be taken into account when field testing the devices installed in a circuit breaker.)

Section "III. C." is the recommended field procedure for CALIBRATION of overcurrent devices. This procedure is to be also used for MAINTENANCE TESTING of older equipment, installed and in use in the field. Each and every element of the device is checked, but in doing so, settings must be changed which temporarily alters (for the test) the device overcurrent characteristics, destroying the Factory Test Certification. The Testing Organization must, therefore, recalibrate the device using its test equipment.

II. GENERAL

FOR SAFETY - MAKE CERTAIN TO KEEP CLEAR WHENEVER THE CIRCUIT BREAKER IS CLOSED AND/OR CLOSING SPRINGS ARE CHARGED.

1. Refer to the appropriate BBC Brown Boveri, Inc. instruction bulletins for general circuit breaker instructions and maintenance.

2. This procedure covers the latest models of overcurrent trip devices. For previous models, the basic procedure may be followed in principal with the knowledge that the calibration nameplate and the method of adjustment may be slightly different.

II. GENERAL

2. con't

OD-3 Through OD-82

The latest models supplied since April 1966 are easily recognized by the shape of the nameplate. (See Fig. 1) The earlier models have nameplates that are rectangular in shape. The OD-3 model, supplied from 1958 to November 1963, has the long-time and instantaneous elements incorporated in one armature with an instantaneous spring arrangement similar to the present OD-5. Also, all the earlier models supplied from 1958 to April 1966, having long-time delay, have a common long-time delay adjustment screw.

OD-300

The OD-300 overcurrent devices supplied before July 1964 also have the long-time and instantaneous elements incorporated in one armature, similar to the OD-500.

3. Calibration Multiplier for OD-300 through OD-800 (K-3000 and K-4000)

All K-3000 and K-4000 circuit breakers shipped after January 1, 1972, have had the overcurrent trip devices calibrated using "single-pole calibration multipliers."A 2½ X 2" decal mounted on the breaker left side of the front cover plate (to the rear of the escutcheon plate), lists these multipliers as being: L. Pole - 1.05; C. Pole - 1.25; and the R. Pole - 1.20. These multipliers are to be used when checking the calibration of these breakers with current flowing only through the pole being tested. This is the usual method and the method used throughout this instruction bulletin. Multipliers are used to compensate for the interphase effect that exists when the breakers are subjected to the normal three phase currents.

The interphase effect on the K-225 through K-2000 breakers is negligible; therefore, calibration multipliers for these breakers are not required.

4. Test Equipment - The test equipment should be a power supply capable of supplying single phase, high current at low voltage, at the same frequency as the overcurrent device is rated, with minimum sine wave distortion. Output current capability should be greater than 50,000 amperes for checking the instantaneous setting of an overcurrent device on a K-4000 breaker as its highest setting. The test equipment should be capable of maintaining the high current output for short-time delay and instantaneous current tests for a minimum of two seconds. It should also be equipped with a "read and hold" electronic ammeter for reading short duration current output.

If the test set does not have the capacity for checking the instantaneous element for pickup or short-time element for time delay, then the armatures of these elements should be pushed toward the magnet with no noticeable burden and then released to see that they reset and seat at the armature

ASEA BROWN BOVERI

II. GENERAL

4. con't

stops. (See Figures 2 and 5.) The equipment should contain a timer which will operate during current flow and be capable of accurately measuring times between .05 and 300 seconds.

5. When removing breaker from switchboard and/or moving to test location, keep in upright position so as not to affect long-time delay results. Generally, to insure proper operation of direct-acting trip devices, whether new or in service, exercise the long-time armature (wide) to insure that there is resistance to motion. This will remove any trapped air which could lead to false operation.

6. Connect the upper and lower breaker terminals of one pole to the test unit. If the breaker and test unit are not equipped with stab adapters, use cable or bus of sufficient size and as short as possible to hold heat rise and voltage drop to a minimum.

7. On transformer trip devices, the overcurrent coil (5 ampere rating) is energized by a current transformer whose primary is the bus that connects to the breaker primary contacts; since it may not be convenient to test the breaker with the current transformers in the circuit, the test current may be applied directly to the overcurrent trip device coil. This coil terminates at a terminal block on the back of the circuit breaker, and it is necessary to connect the test power supply to this block and not to the upper and lower primary breaker terminals. Refer to the basic circuit breaker auxiliary wiring diagram.

8. After each test that results in the breaker tripping, reclosing the breaker is required before proceeding with the next test.

9. Since much of the testing is done with currents exceeding the continuous current rating of the overcurrent devices, care should be exercised in not overheating the overcurrent coil. Allow sufficient cooling time between test. Also, use of an air hose can expedite the cooling.

10. Make all acceptance tests at the factory settings or the settings defined by the customer. For maintenance testing, test at the "as found" settings. Minor changes can be made when recalibrating to bring the overcurrent device into specification.

11. The OD-32 and OD-82 are overcurrent devices with sealed instantaneous and long-time delay elements for fire pump circuit breakers. These seals should not be broken unless sanctioned by authorized personnel.

12. The air gap distance between magnet and armature is set to a fixed dimension at the factory. This air gap should not be changed in the field.

II. GENERAL con't

13. When the breaker is not energized or the current is below the pickup value, the armatures of overcurrent device (see Fig. 2 & 5) should be seated on the stops. After an armature has actuated to trip the breaker, the reset time (time for the armature to seat on the stop) is 4 seconds maximum for the long-time armature and one second maximum for the short-time or instantaneous armatures.

14. To keep the testing time reasonable and to keep the breaker from overheating, test procedures specify the minimum number of tests required to assure proper operation of all elements of the overcurrent device. Therefore, it is usual to test long-time delay at 300% of the long-time delay pickup calibration setting and short-time delay at 150% of the short-time delay pickup calibration setting. For OD-4, -5, -6, -400, -500 and -600, use 300% of the device coil rating for long-time delay test current.

15. Due to extensive equipment required, field testing for resettable delay is not justified and, therefore, not covered by this procedure.

16. Clean contacts - The main contacts may become marked from repeated tests since at the low voltage values, with the arc contact material being high in resistance, the current may interrupt on the mains. Clean with non-metallic material such as "Scotch Brite." Blow residue from the breaker before placing in service.

III. FIELD TEST PROCEDURES

A. Acceptance Testing of New Overcurrent Devices Using an Electrical Test Set

1. Long-Time Delay Test

In order to keep test time to a minimum, it is sufficient to test the overcurrent devices at the calibration point and time band at which they are already set. (Note that the OD-3 and OD-32 and OD-300 have only one time band.)

Set the current through the breaker (one pole at a time) as shown in the chart below. The time for tripping the breaker should be within the limits shown. Test time delay three times, but allow a minimum of four seconds between tests to give the armature time to reset completely. Observe armature to ensure that it is fully reset before retesting.

TABLE I

OD-3, 300	
Test Current	OD-3 - 3 x Long-Time Pickup Setting
	OD-300 - 3 X Long-Time Pickup Setting X Calibration Multiplier
Time Delay	8 to 34 Seconds

OD-4, 5, 6, 400, 500, 600				
Test Current	OD-4, 5, 6 - 3 X Coil Rating OD-400 Thru 600 - 3 X Coil Rating X Calibration Multiplier	Long-Time Delay Limits (Sec.)		
Pickup Setting		Min. Band	Int. Band	Max. Band
1st Point (80% Coil Rating)		9-23	24-43	41- 72
2nd Point (100% Coil Rating)		11-28	30-52	50- 90
3rd Point (120% Coil Rating)		14-37	36-66	60-110
4th Point (140% Coil Rating)		19-48	42-80	69-135
5th Point (160% Coil Rating)		23-63	50-98	86-160

OD-32 (Firepump)	
Test Current	200% of Long-Time Pickup Setting
Time Delay	5 to 19 Seconds

If the first test for long-time delay results in time delay not within the limits, check as follows:

a. Repeat the test two more times. If times for these two tests are within the limits, it is possible the breaker may have been tilted during removal from the switchboard to the test location (re: 11.4.)

b. If the breaker does not trip with the test current applied for several minutes, then, with current removed, push up the long-time armature at Point "A", Figures 2 and 5, with a rod to trip the breaker. Allow time for the dashpot to time out. If the breaker cannot be tripped, then the trip screw should be checked for adjustment. (See circuit breaker instruction bulletin for adjustments.)

c. If there is no long-time delay or low time delay, observe that the long-time armature resets, with current removed, to touch at the stop. Failure to touch the stop will result in reduced or no time delay.

d. Check for oil leaking from the dashpot.

If it is necessary to readjust to obtain the correct time, the long-time delay adjusting screw should be turned to move the long-time delay indicator toward the maximum band (high) to increase the time or toward the minimum band (low) to decrease the time.

2. Instantaneous Pickup Test

On OD's 5, 9, 500 and 900, it is necessary to either block the short-time armature (thin armature) or to change the short-time pickup to the maximum calibration. This must be done to prevent the short-time element from tripping the breaker, since the short-time is normally set to a lower value than the instantaneous. The instantaneous pickup current is the lowest current value that results in the breaker always (approximately 5 times in succession) tripping as soon as the current is instantaneously applied to the breaker. (A setting lower than this will result in no tripping or delayed tripping in at least one of five tries.)

This current should be within ±20% of the calibration point on the nameplate for the OD-3 through 82 and within ±20% of the calibration point on the nameplate X calibration multiplier for the OD-300 through 800.

3. Short-Time Pickup Test

On OD's 5, 9, 500 and 900, the instantaneous/long-time armature (wide armature) should be blocked or the instantaneous should be set to the maximum calibration point. This is to prevent the instantaneous from inadvertently tripping the breaker, since, with the minimum instantaneous pickup of five times coil rating ±20% and minimun short-time pickup of four times coil rating ±15%, there is a possibility that the instantaneous element could trip the breaker.

The short-time pickup current is the lowest current value that results in the breaker always (approximately 5 times in succession) tripping when the current is applied instantaneously to the breaker; however, since there is time delay in the short-time element, it may take as long as one second from inception of current until the breaker trips.

This current should be within ±15% of the calibration point on the nameplate for the OD-3 through 82 and within ±15% of the calibration point on the nameplate X calibration multiplier for the OD-300 through 800.

ASEA BROWN BOVERI

4. Short-Time Delay

On OD's 5, 9, and 500, the long-time armature (wide armature) should be blocked or the instantaneous should be set at the maximum calibration point. The current through the breaker should be set a 1½ times the pickup point for the OD-4 through 82 and 1½ times the pickup point times the calibration multiplier for the OD-400 and 500. In order to set the current trhough the breaker at 150% pickup, it is necessary to keep the OD armatures from moving since this movement may result in the breaker tripping and also as the long-time moves toward the magnet, the current through the breaker will decrease. On OD-3 through OD-82, this movement can be stopped by holding down the armatures at Point "A" (Fig. 2) by using a wire looped around the screw. OD-300 through OD-800 armatures can be stopped from moving by pushing up at Point "B" (Fig. 5) with an appropriate stick. The short-time delay is measured from the inception of current until the breaker trips. The delay time limits are listed in Table II. See Figures 4 and 6 to determine at which short-time delay band the overcurrent device is set.

TABLE II

For OD 400 & 500, Use Test Current X Calibration Multiplier				
OD 4, 5, 9, 10	Short-Time Delay Limits (Sec.)			
Pickup Setting	Test Current	Min. Band	Int. Band	Max. Band
1st Point (400% of coil rating)	600% of	.14-.33	.29-.47	.47-.80
2nd Point (700% of coil rating)	1050% coil	.11-.27	.23-.38	.38-.65
3rd Point (1000% of coil rating)	1500% rating	.09-.18	.18-.30	.30-.50

B. Examples for Testing

Type OD-5)
OD Rating - 400 Amp.)
Long-time pickup set at - 320 Amp.) Information From Overcurrent
Long-time delay band set at - Intermediate) Device Nameplate
Instantaneous Pickup set at - 4000 Amp.)
Short-time pickup set at - 2800 Amp.)

Short-time delay band set at - intermediate - by observing location of pin. See Fig. 4

1. Long-time Delay

Per Section "A", Paragraph 1, the current through the breaker should be 1200 amp = 3 X 400 amp. (coil rating). Time to trip the breaker should be 24-43 seconds for intermediate band per Table I.

2. Instantaneous Pickup

Per Section "A", Paragraph 2, test the instantaneous element where set at 4000 amp. Block the short-time element. The instantaneous element should pick up instantaneously and trip the breaker at 4000 ±20% amp.

3. Short-time Pickup

Per Section "A", Paragraph 3, test the short-time element where set at 2800 amp. Test per Section "A", Paragraph 3. The short-time element should pick up and trip the breaker at 2800 ± 15% amp.

4. Short-Time Delay

Note: For this test, it will be necessary to block the instantaneous element.

Per Section "A", Paragraph 4, the current through the breaker should be 1½ X 2800 = 4200 amp. Time delay should be .23 to .38 seconds per Table II.

5. Long-Time Pickup

Due to the requirement to alter the setting of the long-time delay band to remove all delay in order to check long-time pickup, this is not a recommended ACCEPTANCE TEST.

Instead, three different long-time delay tests should be made to verify the shape of the overcurrent curve. In addition to the 300% test, tests at 150% and 450% should be done.

Alteration of any factory made setting on a new overcurrent device requires recalibration of the effected element.

6. Example for OD-500

Assuming the example of Paragraph III. B., Page 9, to be an OD-500, right pole, the following values would prevail.

a.	L.T. Delay - 3 X 400 X 1.20	=	1440 Amp. Applied
b.	Inst. Pickup - 4000 X 1.20 ±10%	=	4800 Amp. Required
c.	S.T. Pickup - 2800 X 1.20 ±15%	=	3360 Amp. Required
d.	S.T. Delay - 4200 X 1.20	=	5040 Amp. Applied

C. Calibration/Maintenance Testing

Long-time pickup can be checked by the following method as long as it is understood that the testing organization then becomes responsible for (re) calibration of the long-time delay element. After the test, long-time delay must be reset to the "as found" setting and all tests detailed in Section III.B., items 1,2,3 and 4 completed.

The long-time pickup test is done as follows:

1. OD's 3,4,5,6,20,32,61 (See Figures 2 & 3)

Turn the long time delay adjusting screw so that the delay indicator moves up. After the indicator begins to move past the minimum time band, it is necessary, after each quarter turn of the adjustment, to check if time delay has been removed. Time delay is removed when a sudden light push of the long-time armature at Point "A" results in the armature moving toward the magnet, the only resistance being that due to mechanical friction and the long-time calibration spring.

NOTE: On OD-5 and OD-500, a sudden upward push on the armature with time delay still engaged can result in the armature moving. This is due to the instantaneous spring compressing; therefore, on OD-5 and OD-500, do not push at Point "A" hard enough to compress this spring.

2. OD's 300, 400, 500, 600 (See Figure 5)

Loosen the long-time delay lock screw approximately one turn. Turn the long-time delay adjustment to the right until the minimum band lines up with the indicator. Continue to turn the adjustment to the right, but after each 1/6 turn of the adjustment, check to determine if time has been removed. It may be necessary to bend the indicator to permit movement past the minimum band. Time delay is removed when a

sudden light push of the long-time armature at Point "A" results in the armature moving toward the magnet, the only resistance being that due to mechanical friction and the long-time calibration spring. See above note for OD-500.

The current through the breaker should be gradually increased. The pickup current is the lowest current that will cause the armature to move toward the magnet. This pickup current should be within ±10% of the pickup point adjacent to the indicator times the calibration multiplier. After completion of test, move delay indicator to desired setting and retighten the lock screw. Recheck time delay (see Section "A", Paragraph 1).

ABB
ASEA BROWN BOVERI

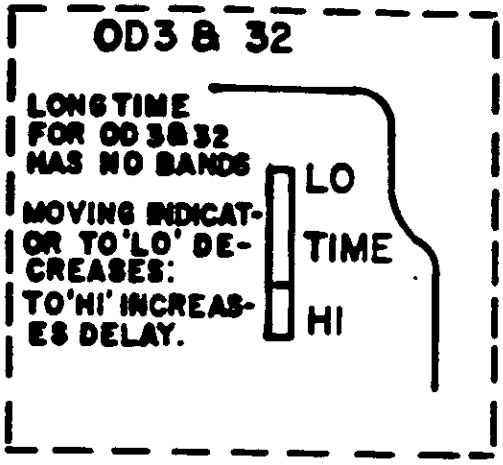

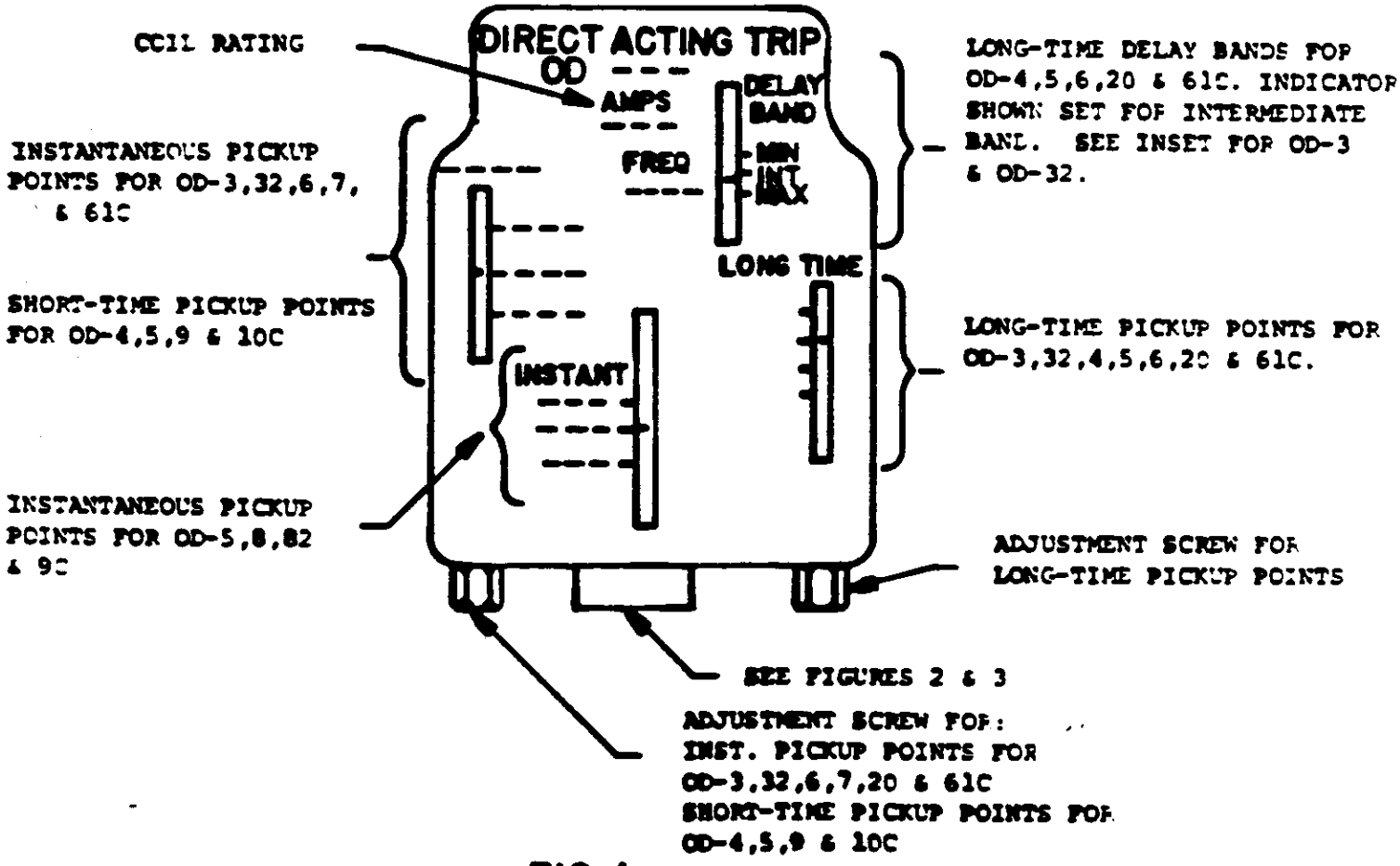

FIG. 1

OVERLOAD DEVICE (OD-3 THROUGH OD-82) USED ON K-225-K-2000

ASEA BROWN BOVERI

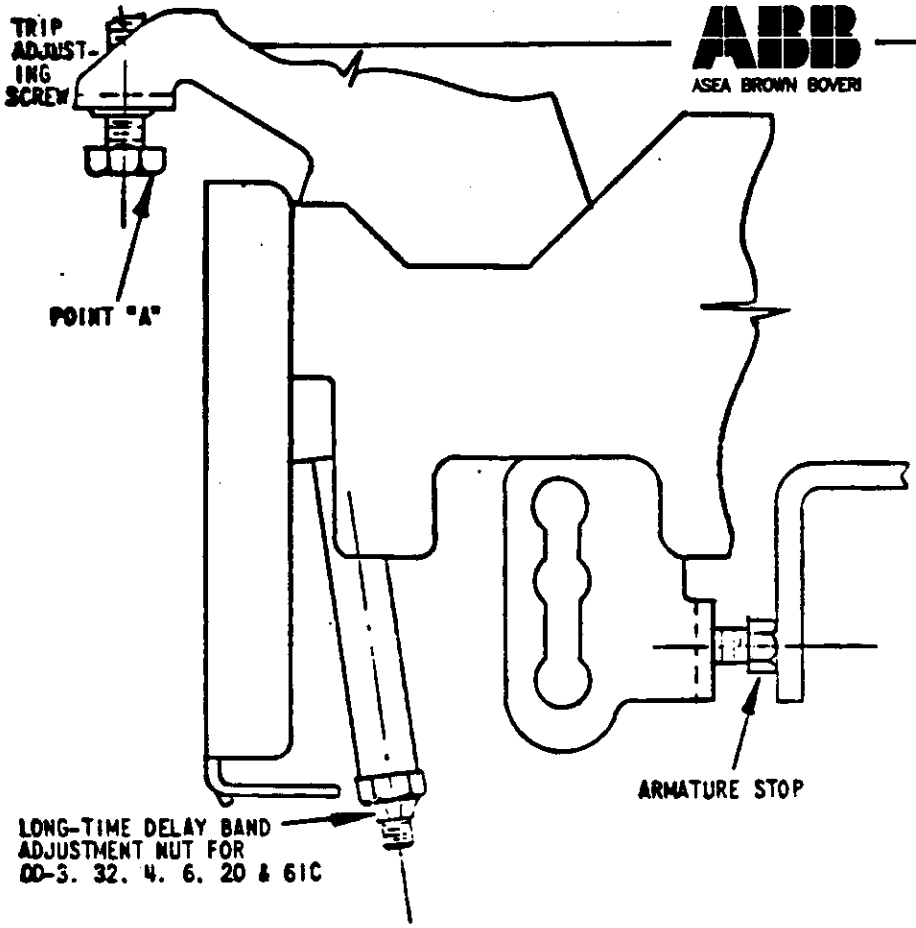

FIG. 2

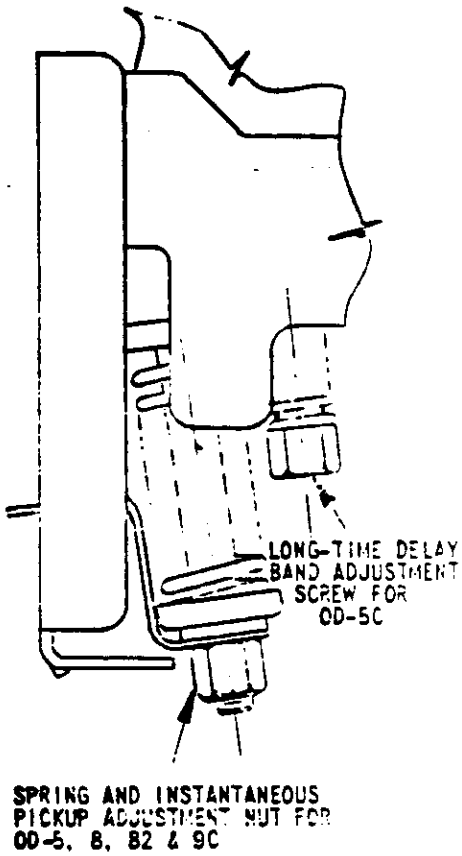

FIG. 3

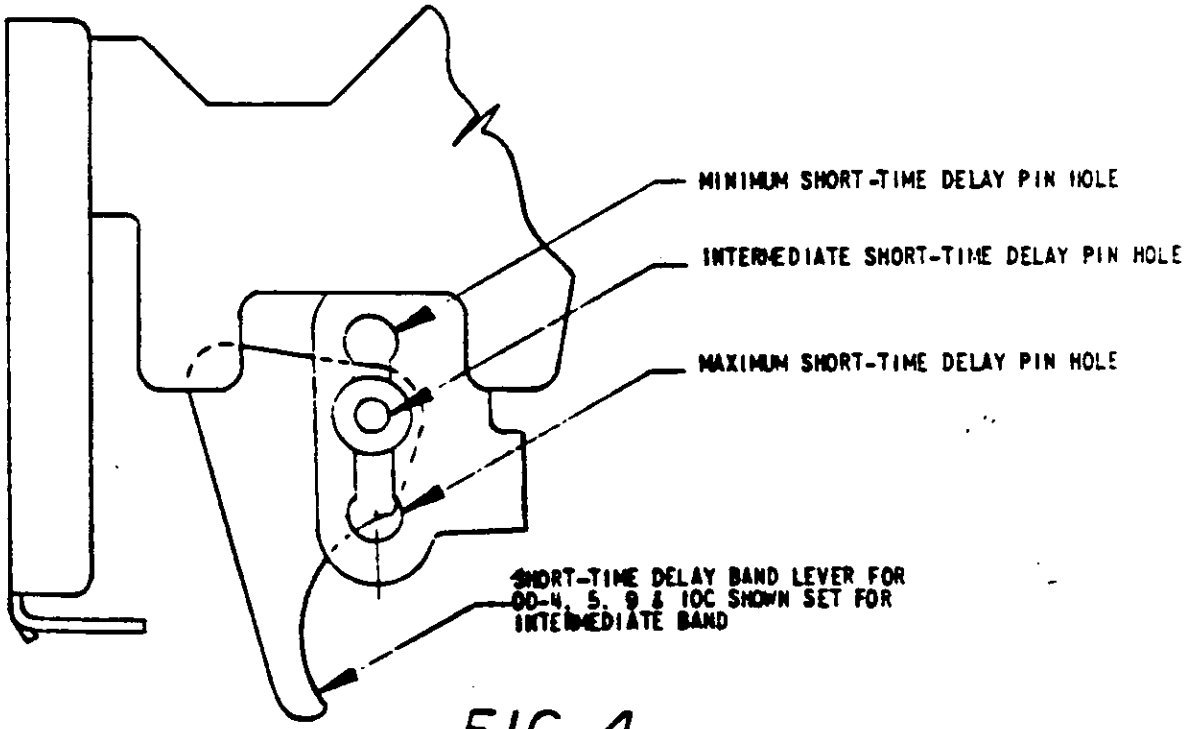

FIG. 4

ASEA BROWN BOVERI

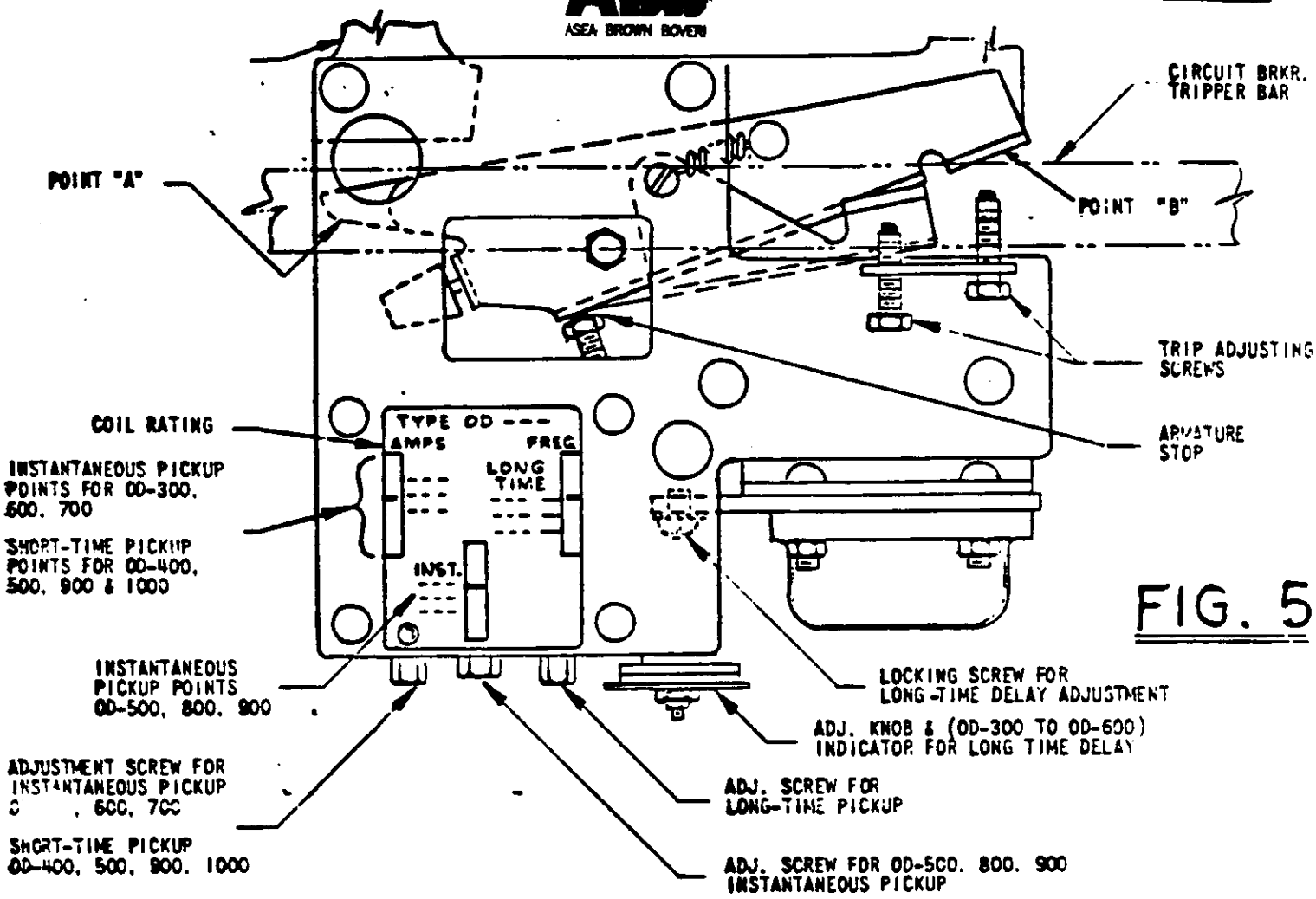

FIG. 5

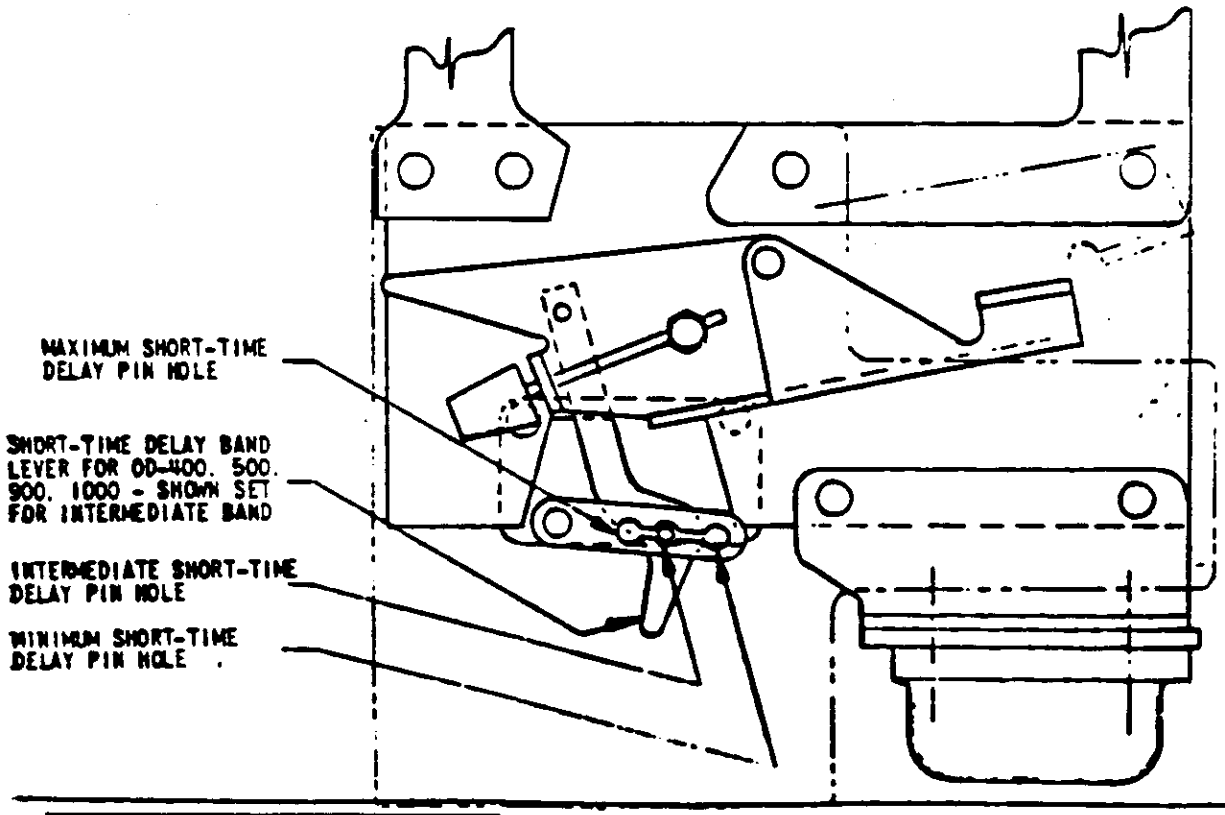

FIG. 6

ASEA BROWN BOVERI

ADJUSTMENT OF OVERCURRENT TRIP DEVICES FOR TYPE K-225, K-600, K-1600, AND K-2000 CIRCUIT BREAKERS

The type OD overcurrent trip devices are calibrated at the factory. The armature trip travel must be adjusted after the overcurrent trip devices are installed on the circuit breaker.

ARMATURE TRIP TRAVEL (refer to dwg. S-14783)

CAUTION: KEEP HANDS CLEAR OF ALL MOVING PARTS. THE CIRCUIT BREAKER WILL TRIP TO THE "OPEN"POSITION WHILE CHECKING OR ADJUSTING THE ARMATURE TRIP TRAVEL.

When checking the armature trip travel adjustment or making final armature trip travel adjustment, insert the feeler gauge at point "A" parallel to the magnet face. The circuit breaker should trip, when the armatures are operated by hand, with a 0.020 gauge inserted at "A". It should not trip when a 0.030 inch gauge is inserted.

If adjustments are not as stated above, turn the trip adjusting screw (4) in or out as may be required. Always recheck the trip travel ajustment after making any changes in the trip screw position.

Refer to drawing S-14783 and,

1. Back-out ajusting screw (4) so that it will not strike the tripper bar (3) when the armature (2) is operated by hand.

2. Clost the circuit breaker.

3. Push up and hold the armature (2) in its tripping position (against the magnet face).

4. Slowly turn in the adjusting screw (4) until the circuit breaker trips.

5. Turn the adjusting screw (4) in (the same direction as in step 4) one additional full turn.

NOTE: Final adjustment must be made by using the feeler gauges as described in the preceding paragraphs for checking the adjustment.

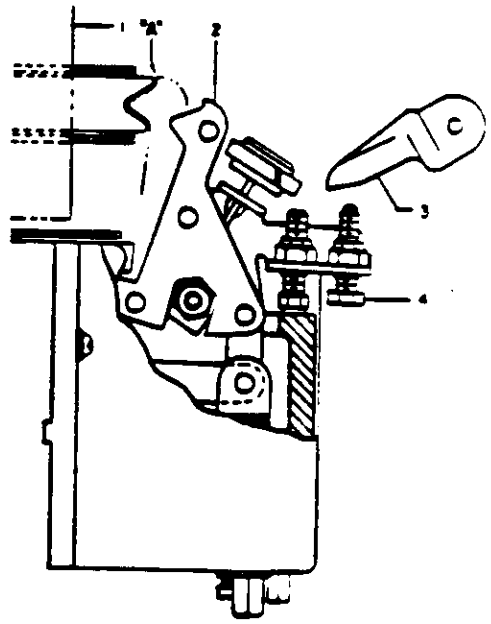

1 COIL
2 ARMATURE
3 TRIPPER BAR
4 ADJUSTING SCREW

Dwg. S-14783

These instructions do not purport to cover all details or variations in equipment nor to provide for every possible contingency to be met in conncetion with installation, operation, or maintenance. Should further information be desired or should particular problems arise which are not covered sufficiently for the purchaser's purposes,the matter should be referred to Brown Boveri Electric, Inc.

RATIO OF ACTUAL CURRENT TO LONG-TIME PICKUP POINT

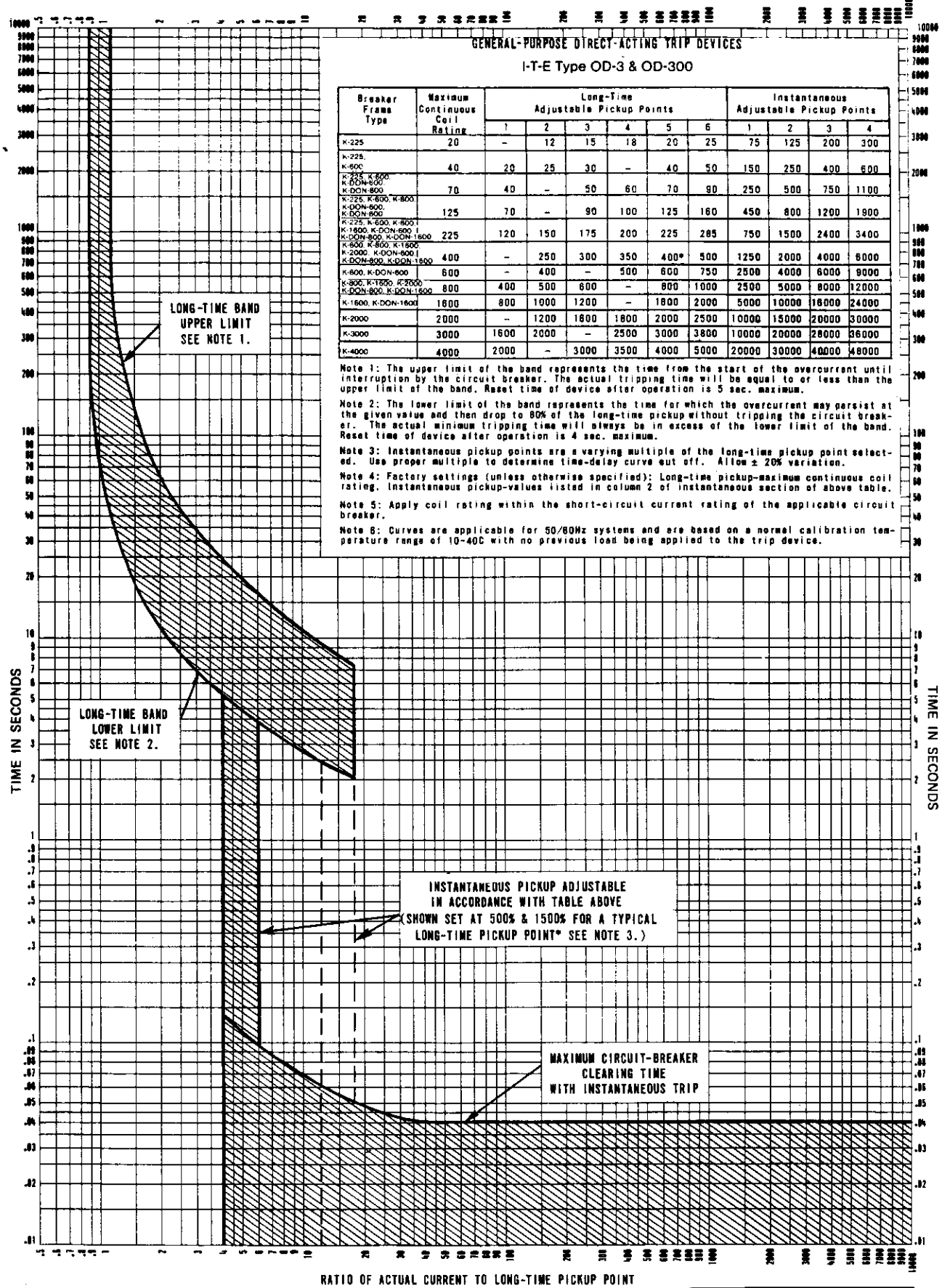

GENERAL-PURPOSE DIRECT-ACTING TRIP DEVICES

I-T-E Type OD-3 & OD-300

Breaker Frame Type	Maximum Continuous Coil Rating	Long-Time Adjustable Pickup Points						Instantaneous Adjustable Pickup Points			
		1	2	3	4	5	6	1	2	3	4
K-225	20	–	12	15	18	20	25	75	125	200	300
K-225, K-600	40	20	25	30	–	40	50	150	250	400	600
K-225, K-600, K-DON-600, K-DON-800	70	40	–	50	60	70	90	250	500	750	1100
K-225, K-600, K-800, K-DON-600, K-DON-800	125	70	–	90	100	125	160	450	800	1200	1900
K-225, K-600, K-800, K-1600, K-DON-600, K-DON-800, K-DON-1600	225	120	150	175	200	225	285	750	1500	2400	3400
K-600, K-800, K-1600, K-2000, K-DON-600, K-DON-800, K-DON-1600	400	–	250	300	350	400*	500	1250	2000	4000	6000
K-600, K-DON-600	600	–	400	–	500	600	750	2500	4000	6000	9000
K-800, K-1600, K-2000, K-DON-800, K-DON-1600	800	400	500	600	–	800	1000	2500	5000	8000	12000
K-1600, K-DON-1600	1600	800	1000	1200	–	1800	2000	5000	10000	16000	24000
K-2000	2000	–	1200	1600	1800	2000	2500	10000	15000	20000	30000
K-3000	3000	1600	2000	–	2500	3000	3800	10000	20000	28000	36000
K-4000	4000	2000	–	3000	3500	4000	5000	20000	30000	40000	48000

Note 1: The upper limit of the band represents the time from the start of the overcurrent until interruption by the circuit breaker. The actual tripping time will be equal to or less than the upper limit of the band. Reset time of device after operation is 5 sec. maximum.

Note 2: The lower limit of the band represents the time for which the overcurrent may persist at the given value and then drop to 80% of the long-time pickup without tripping the circuit breaker. The actual minimum tripping time will always be in excess of the lower limit of the band. Reset time of device after operation is 4 sec. maximum.

Note 3: Instantaneous pickup points are a varying multiple of the long-time pickup point selected. Use proper multiple to determine time-delay curve cut off. Allow ± 20% variation.

Note 4: Factory settings (unless otherwise specified): Long-time pickup-maximum continuous coil rating. Instantaneous pickup-values listed in column 2 of instantaneous section of above table.

Note 5: Apply coil rating within the short-circuit current rating of the applicable circuit breaker.

Note 6: Curves are applicable for 50/60Hz systems and are based on a normal calibration temperature range of 10-40C with no previous load being applied to the trip device.

RATIO OF ACTUAL CURRENT TO LONG-TIME PICKUP POINT

TIME-CURRENT CHARACTERISTIC CURVES FOR K-LINE AND K-DON CIRCUIT BREAKERS

I-T-E TYPES OD-3 AND OD-300; LONG-TIME AND INSTANTANEOUS GENERAL-PURPOSE DIRECT-ACTING TRIP DEVICE

BBC BROWN BOVERI

DWN. BY F. C. Teufel DATE 11-17-78

NO. TD-6693 REV. 8

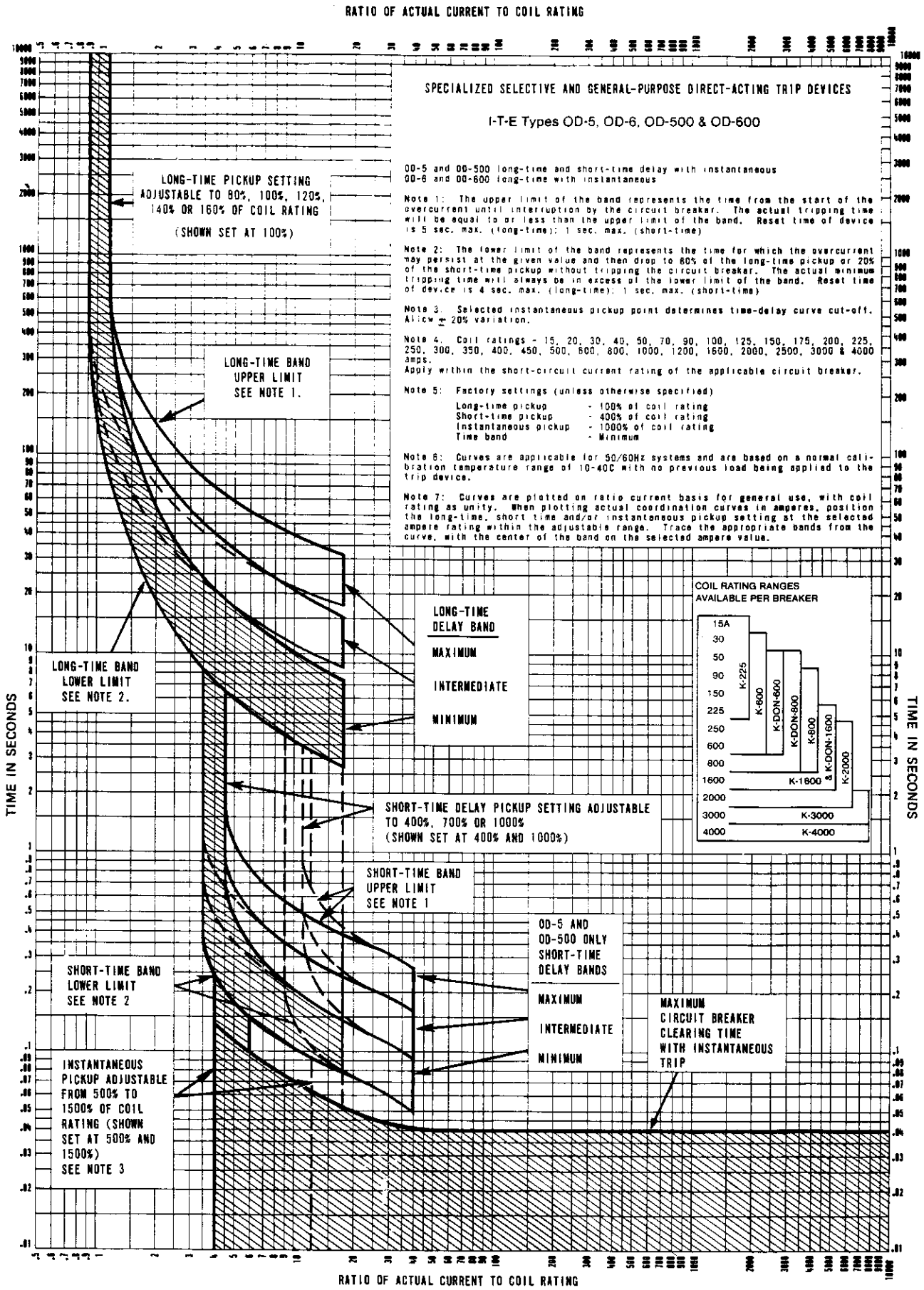

SPECIALIZED SELECTIVE AND GENERAL-PURPOSE DIRECT-ACTING TRIP DEVICES

I-T-E Types OD-5, OD-6, OD-500 & OD-600

OD-5 and OD-500 long-time and short-time delay with instantaneous
OD-6 and OD-600 long-time with instantaneous

Note 1: The upper limit of the band represents the time from the start of the overcurrent until interruption by the circuit breaker. The actual tripping time will be equal to or less than the upper limit of the band. Reset time of device is 5 sec. max. (long-time); 1 sec. max. (short-time)

Note 2: The lower limit of the band represents the time for which the overcurrent may persist at the given value and then drop to 80% of the long-time pickup or 20% of the short-time pickup without tripping the circuit breaker. The actual minimum tripping time will always be in excess of the lower limit of the band. Reset time of device is 4 sec. max. (long-time); 1 sec. max. (short-time)

Note 3. Selected instantaneous pickup point determines time-delay curve cut-off. Allow ± 20% variation.

Note 4. Coil ratings - 15, 20, 30, 40, 50, 70, 90, 100, 125, 150, 175, 200, 225, 250, 300, 350, 400, 450, 500, 600, 800, 1000, 1200, 1600, 2000, 2500, 3000 & 4000 amps.
Apply within the short-circuit current rating of the applicable circuit breaker.

Note 5: Factory settings (unless otherwise specified)

Long-time pickup	- 100% of coil rating
Short-time pickup	- 400% of coil rating
Instantaneous pickup	- 1000% of coil rating
Time band	- Minimum

Note 6: Curves are applicable for 50/60Hz systems and are based on a normal calibration temperature range of 10-40C with no previous load being applied to the trip device.

Note 7: Curves are plotted on ratio current basis for general use, with coil rating as unity. When plotting actual coordination curves in amperes, position the long-time, short time and/or instantaneous pickup setting at the selected ampere rating within the adjustable range. Trace the appropriate bands from the curve, with the center of the band on the selected ampere value.

REFERENCE ONLY

TIME - CURRENT CHARACTERISTIC CURVES FOR K-LINE & K-DON CIRCUIT BREAKERS
I-T-E TYPES OD-5 AND OD-500 - LONG-TIME - SHORT-TIME - INSTANTANEOUS
DIRECT-ACTING TRIP DEVICES, FOR SPECIAL SELECTIVE TRIPPING APPLICATIONS
TYPES OD-6 AND OD-600 - LONG-TIME AND INSTANTANEOUS
DIRECT-ACTING TRIP DEVICES FOR 80-160% CALIBRATION REQUIREMENTS

BBC BROWN BOVERI

DWN. BY F. C. Teufel DATE 11-17-78

NO. TD-6695 REV. 8