ABB Network Partner

REC 200 Series

Microprocessor based substation control and communication equipment

1MRK 511 011-BEN

July 1997
Changed since November 1995
Data subject to change without notice

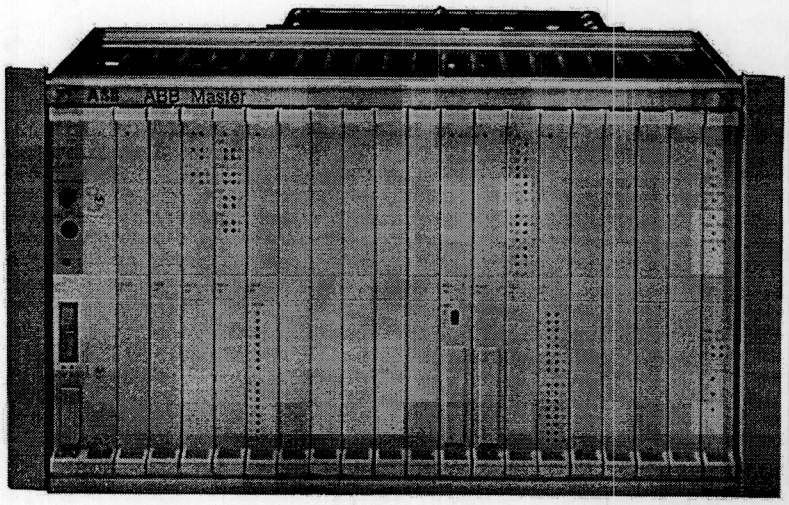

(890383)

Features

- Self-supervision
- High availability
- Time tagging of events with high accuracy
- Great flexibility at extensions
- Built-in configurable data base
- Short installation and commissioning time
- Minimum space requirement
- User-friendly programming language
- Reduced cabling with serial communication
- Disturbance free communication with fibre-optic cables
- Serial fibre-optic communication with protection
- Communication with control centres
- Standardized and type tested software modules, e.g.:
  - Apparatus control
  - Bay control
  - Interlocking
  - Sequences
  - Autoreclosing
  - Automatic Voltage Control
  - Parallel control of transformers
  - Serial communication with protection

Application

The programmable control unit, REC 200, is used as bay, station and section computer or gateway.

When the requirements for security, dependability and fault tolerance are lower, the functions of more than one bay can be placed in the same REC 200. Digital process signals (DI/DO) are connected to REC 200 via dedicated connection units (RTDA 100, RTDB 100 and DSTD 108) which fulfils the same EMC standards as applicable for high-voltage protections. Analog process signals are also connected via dedicated connection units, but for these the barrier is handled by transducers.

If required the REC 200 can be equipped with a control panel for local control. This panel has a switch for selection of the operator mode; station/remote, local or back-up. In station/remote mode the station is controlled from the local MMI or the control centre, depending on the selection from a VDU or station switch. Control from the control panel can only take place in local or back-up mode. The local mode ensures that the interlocking requirements are considered during all manoeuvres, while the back-up mode is used in emergency situations without interlocking. Hence, the back-up mode bypasses the interlocking, i.e. the REC 200.

Basic and optional functions
The REC 200 units are available with a set of different program modules. Each program module supports a specific set of functions as shown in table 2 below. In addition to the functions specified in table 2 the following applications are supported regardless of selected program modules:

- Interlocking
- Sequences
- Automatic restoration
- Autoreclosing
- Pulse counter measuring

REC 200
REC 200 is used for an incorning/outgoing feeder, transformer bay or a $1^1/_2$ breaker diameter. When the requirements for security, dependability, fault tolerance and functions are lower, the supervision and control of several bays (high voltage section) can be placed in the same REC 200. It is the number of apparatuses and functions that limits the high voltage section size.
For station wide applications a REC 200 control unit can be used as station computer.

REC 245
When the requirements for independence between power system units are limited, the control and supervision of several bays can be placed in the same control unit.

REC 245 is a section computer used mainly on medium voltage levels, to control several bays via SPACOM control units utilizing the object bus. Up to approximately 40 bays can be controlled with one REC 245, depending on the number of signals and switchgear apparatuses.

For station wide applications the REC 245 can be used as a station computer whenever a large memory is needed for the required station wide functions.

REC 250
REC 250 is used as a gateway or station computer for connection to control centre(s) or local operator station(s) if all units on the Ethernet based LAN are equipped with software package QMP 2x0 version 6.0 or later.

One REC 250 can communicate with one or several control centres in point-point, multi-drop, star and loop network configurations.

The ABB protocols ADLP180 and RP570 are default for REC 250. However when other protocols are required these can be implemented on an additional communication board mounted in the same rack.

When the requirements for independence between local control and remote control are limited, the control and supervision of several bays and the remote control communication can be placed in the same control unit, REC 250. A typical configuration is when one REC 250 is used as station computer with interfaces to both an operator station and one or several control centres.

Available protocols are:

- ADLP 180
- RP 570
- Sinaut 8
- TG 809
- GI 74
- WISP+

Many RTU protocols come in several versions why it's recommended to always verify that correct version is available.

REC 280
REC 280 is used as gateway for connection to control centres in configurations with REC 200 units based on software packages XMV 800 or QMV 800 and QMP 2x0 version 5.x or older, or whenever the station bus is based on MB200.
The REC 280 can communicate with one or several control centres in point-point, multi-drop and loop network configurations.
REC 280 can work with any standard REC 200 unit, i.e. no additional software is required in these units. Hence, the cross reference table between substation control and network control addresses is defined in the REC 280.

Available protocols are:

- ADLP 80 (version 802)
- Indactic 33/41
- USCOM
- FW 537
- EFD 300
- SEAB-1F

Many RTU protocols come in several versions why it's recommended to always verify that correct version is available.

Design

REC 200 is a standard MP200/1 unit from the ABB Master family, equipped with specific substation control functions. ABB Master is a general purpose microcomputer system designed for process monitoring and control within the power industry environments. The REC 200 includes plug-in units, such as processor-, memory-, input- and output boards, all mounted in 19" racks of standard European size. The REC 200 is delivered either in an apparatus cubicle or as loose equipment.

REC 200 can be ordered with 1, $1^1/_2$ or 4 MB RAM. Selection of memory size depends on application. Typical configuration for a 1 MB RAM control unit is as; pure gateway, gateway with control of additional 1-3 bays, control unit for 1-4 bays or 1-2 diameters ($1^1/_2$ breaker). In larger applications an additional 0,5 MB memory can be added. A 4 MB RAM control unit is typically used for medium voltage section computers, however 1/1,5 MB is often sufficient. The exact memory requirement and CPU load has to be calculated with respect to selected applications and signal amount.

The information in the RAM equipped controlled units are retained by means of a built-in battery back-up unit.

The REC 200 software library consists of a number of standardized and type tested functional block elements and sub programs, which can be used in various types of stations. Each apparatus (breaker, disconnector, earthing switch) has its own sub program based on some few SCS dedicated functional block elements that handles the interaction and status of each process object. This object-oriented approach ensures consistency in the process information used by higher level control functions. Adaptation to e.g. customer specific interlocking requirements can be supported by use of predefined general inputs to the interlocking modules. Thereby it's not necessary to change the type tested software why no re-test is required which ensures quick and correct application programming.

Programming and service aid:

Advant Station 100 is a powerful aid for the programming, testing, commissioning and modification of programs.

Technical Data

General technical data:

Table 1: REC 200 product series

REC 200 unit	Memory size (MB)	Local I/O	Station bus	Object bus	External synchr.	Remote comm.	Local oper. stn.
REC 200	1,0/1,5 [1]	yes [2]	yes [3]	option [4]	option [5]	option [6]	option [7]
REC 245	4,0	option [8]	option [9]	option [4]	option [5]	option [6]	option [7]
REC 250	1,0/1,5 [1]	yes [2]	yes [3]	option [4]	option [5]	option [10]	option [7]
REC 280	4,0	no	option [9]	no	no	yes [11]	yes [12]

1) Default is 1.0 MB, additional 0.5 MB is optional
2) Equipped as default with 1 DSAI 130 (12 bit, 16 ch), 1 DSDI 110A (32 ch) and 1 DSDO 110 (32 ch)
3) Equipped with one station bus interface as default (redundant is optional)
4) Object bus handling require additional option module (see table 2) and communication board RTNC 100
5) External clock synchronisation require additional option module (see table 2) and communication board DSCA 114
6) If REC 250 is used as gateway see table 2 for correct selection of option module
7) See table 2 for selection of correct option module
8) No I/O in basic version
9) No station bus interface in basic version
10) REC 250 is used as either gateway or station computer (MMI interface)
11) REC 280 can only be used as a stand alone gateway
12) REC 280 is not recommended to be used with full graphic MMI based on MicroSCADA

Table 2: Option modules

Function	YS200	YS201	YS202	YS203	YS204	YC560	YC561	QMV800
Full graphic operator station [1]						X[10]	X[11]	
Semi graphic operator station [2]								X[12]
Switchgear control and supervision [3]		X	X		X			
External clock synchronisation [4]	X	X	X	X				
Extra ref types (Tap changer control) [5]	X	X	X	X				
Object bus event handling [6]	X	X						
Efficient protection handling [7]	X	X	X	X				
Remote contr./MMI interf. (REC 250) [8]						X[10]		
Remote contr./MMI interf. (REC 200/245) [9]							X[11]	

1) Local operator station based on full graphic MicroSCADA (require YC560/561)
2) Local operator station based on semi graphic MV800 (require QMV800)
3) Control and supervision based on SCS dedicated functional block elements
4) Only required in the REC 200 unit linked to the external clock (DSCA 114 is required).
NB! Not recommended with full graphic operator station.
5) If semi graphic operator station is used then this feature is required for tap changer control
(12-bit AI board is required, DSAI 130)
6) This function is required for SPA-bus event handling
7) Functional block elements for efficient accessing of protection parameters
8) This feature is only available for REC 250
9) This feature is available for REC 200 with one or more REC 250 in the same LAN
10) This option module require Ethernet based LAN and QMP 2x0 version 6.0 or later (see also note [8,9])
11) This option module require Ethernet based LAN and QMP 2x0 version 6.0 or later (see also note [8,9])
12) NB! Not all functions are supported with MV800

Table 3: Energising quantities, rated values and limit

Quantity	Rated voltage	Nominal range	Operative range
Auxiliary dc voltage	U_r = (24-48)V	±20%	±20%
	U_r = (110-250)V	±20%	±20%
Digital input circuits	U_r = (48-60)V	±20%	±20%
RTDA 100	U_r = (110-125)V	±20%	±20%
dc voltage	U_r = (220-250)V	±20%	±20%
Ripple in dc auxiliary voltage	0%	12%	12%

Table 4: Influencing factors, Permissible influence

Dependence on:	Within nominal range	Within operative range
Ripple in auxiliary dc voltage	–	–
Interruption in auxiliary dc voltage without resetting	<50 ms	unlimited

Table 5: Electromagnetic compatibility test

Test	Type test values	Reference standards
1 MHz burst disturbance	Class III, 2.5 kV	IEC 255-22-1, ANSI C37.90a
Electrostatic discharge	Class III, 8 kV	IEC 255-22-2
HF electromagnetic fields	26 -1000 MHz	IEC 801-3 draft 5, second edition
HF voltage/current injection	0,15 - 26 MHz	IEC 801-6 IEC65 (secr)144 15 may 1990
Radio frequency test	class III clause 4.2 method C 10 V/m, 420 - 470 MHz	IEC 255-22-3
Fast transient disturbance power supply and I/O	Class IV, 4 kV	255-22-4

Table 6: Insulation tests

Test	Type test values	Routine test values	Reference standards
Dielectric test	2,0 kV ac 1 min[1)]	2,2 kV, 1 sec	IEC 255-5
Impulse voltage test	5 kV, 1,2/50 µs, 0,5 J	–	IEC 255-5
[1)] REC 200 has been tested with 2.5 kV applied on connected transducers by CEWE			

Table 7: Contact data

	RTDB 100	DSTD 108
Max. system voltage	250 V ac, 250 V dc	250 kV ac, dc
Test voltage across open contact, 1 min	1,0 kV ac, 1 min	1,0 kV ac, 1 min
Current carrying capacity	3 A continuous	3 A continuous
Making capacity at inductive load with L/R > 10 ms	10 A, 1 sec	–
Breaking capacity for ac	10 A, 2000 VA (resistive)	720 VA at cos ϕ > 0,4
Breaking capacity for dc with L/R < 40 ms	100 W	44 W

Table 8: Additional general data

Dimensions	Width: 60C = 483 mm (19") Height: 6U = 266 mm (347 with cable duct) Depth: 335 mm
Storage temperature	-40°C to 70°C

Diagrams

Typical REC 200 configurations

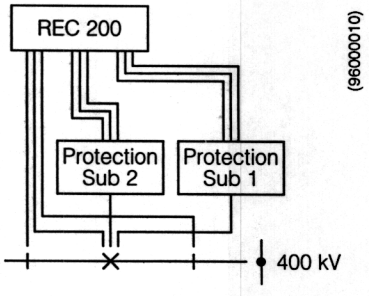

REC 200 in EHV bay application

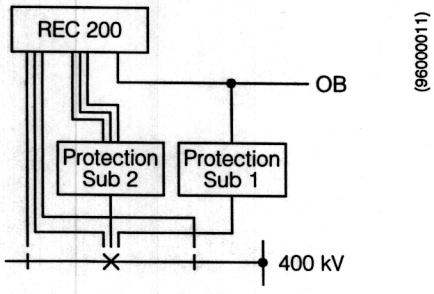

REC 200 in EHV bay application

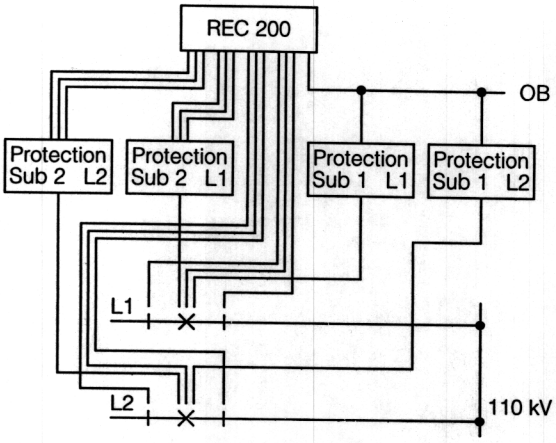

REC 200 in HV section application

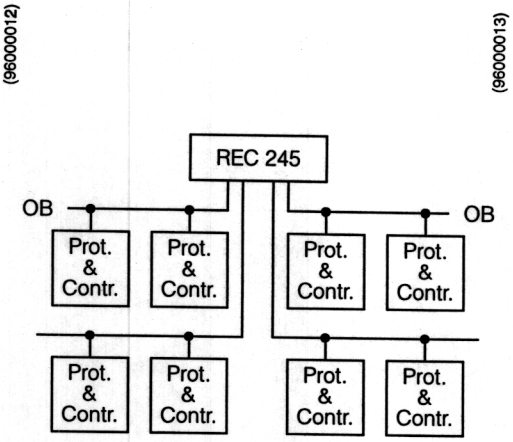

REC 245 in MV section application

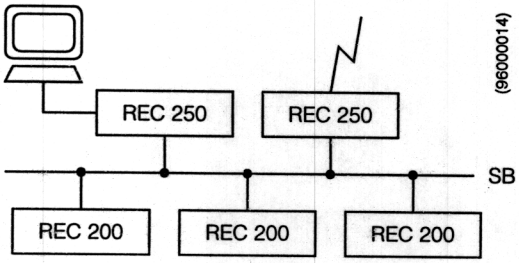

REC 200 as gateway

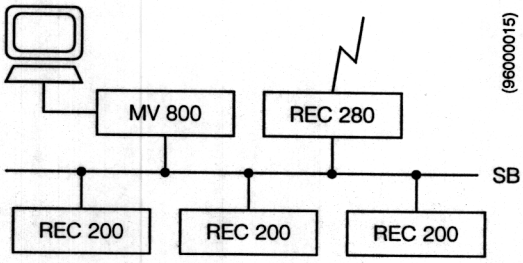

REC 280 as gateway

Ordering

Specify:

- Single-line diagram
- Back-up panel required
- Auxiliary voltage rate
- Voltage levels
- Type of protective relays
- Number of controlled and supervised objects
- Measurements
- Automatic sequences
- Event and alarm handling
- Automatic Voltage Control
- Communication with control centres
- Number of bays per control unit
- Reports
- Trends
- Parallel control of transformers
- Other functions required

Sample specification

The REC 200 series consists of a versatile basic software and hardware platform. Out of which various soft- and hardware combinations are supported, which ensure a possibility to meet various customer requirements.

The REC 200 software library consists of a number of standardized and type tested functional block elements and sub programs, which can be used in various types of stations. Each apparatus (breaker, disconnector, earthing switch) has its own sub program based on some few SCS dedicated functional block elements that handles the interaction and status of each process object. This object-oriented approach ensures consistency in the process information used by higher level control functions. Adaptation to e.g. customer specific interlocking requirements can be supported by use of predefined general inputs to the interlocking modules.

The REC 200 includes plug-in units, such as processor-, memory-, input- and output boards, all mounted in 19" racks of standard European size. The REC 200 is delivered either in an apparatus cubicle or as loose equipment.

References

Pyramid	1MRK 500 016-BEN
S.P.I.D.E.R. MicroSCADA	1MRK 500 017-BEN