ABB

ABB Inc.
Substation Automation and Protection Division
Coral Springs, FL
Allentown, PA

Descriptive Bulletin
41-440M

September 2001

Multi-Zoned Distance

Device Number: 21/21N, 21B, 21P/21NP, 25, 27, 50/50N, 50BF, 51/51N, 50Q/51Q, 59/59N, 67/67N, 79

REL 512 Numerical Transmission Line Protection System

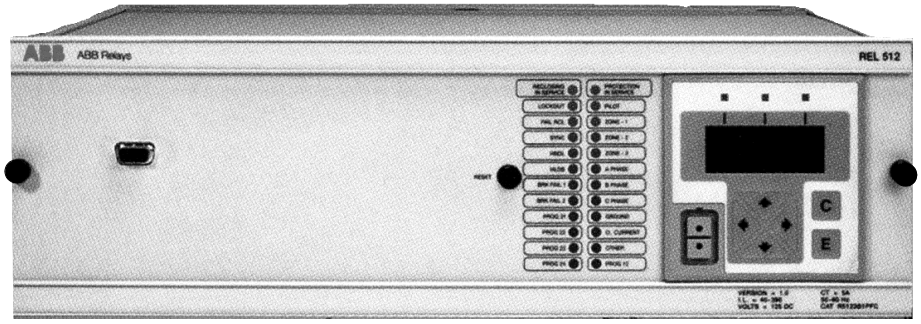

INTRODUCING THE REL 512

REL 512 is a fully integrated numerical transmission line distance protection system and breaker control terminal. Expanding on ABB's proven numerical protection experience, REL 512 offers revolutionary protection concepts which result in true one cycle tripping. High speed operation with transient overreach immunity, advanced logic functions, and application and configuration flexibility are combined to meet your transmission line protection application requirements, pilot and non pilot.

REL 512 additionally offers comprehensive, user configurable pilot system logic which is based on ABB's extensive relay system experience. The system is further enhanced with user defined programmable inputs and outputs with combinational logic control. Highly accurate fault location with compensation for fault resistance and prefault load is a part of the complete protection system. Maintenance requirements are reduced by the inclusion of advanced, patented self testing techniques.

REL 512 optionally includes multi-shot reclosing logic. The logic is combined with synchronism and voltage logic for control of reclosing and manual closing functions. Reclosing/synchcheck option includes 8 'transducer' outputs to indicate voltage, current, watts, vars and fault location, synchronism angle and slip frequency.

REL 512 provides capabilities in multiple communication styles from a simple and intuitive ASCII terminal emulation interface to advanced automation (SCADA) interfaces like DNP 3.0 and Modbus Plus.

REL 512 is also supported by the RELTOOLS, which is an advanced set of configuration, application and analysis software.

NEW PROTECTION CONCEPTS

The REL 512 utilizes a combination of time and frequency domain algorithms and multiple microprocessors to provide comprehensive high-performance protection and control with secure one cycle operating speed and high reach accuracy. The impedance and directional operating units are time-domain based algorithms which follow closely the dynamic operation of the power system, responding rapidly to maintain stability during system disturbances. Overcurrent and other backup and support functions are handled in the frequency domain using conventional Fourier notch filter methods.

APPLICATION

REL 512 is designed to be used in transmission and sub transmission applications where distance (impedance) based line protection is desired. Other functions included are overcurrent protection and supervision, overvoltage protection, selectable directional polarization, breaker failure logic, fault location and fault recording. The power of the two REL 512 microprocessors provides the following functions in one integrated package:

Distance Protection

Three forward zones (Z_1, Z_2 and Z_3) for non-pilot step-distance applications including zone-1 acceleration and loss-of-load tripping.

Combined zone-1 mho (Z_1) and quadrilateral (Z_{1Q}) characteristic to provide coverage of high resistance ground faults for non-pilot applications.

One forward (Z_{PF}) and one reverse zone (Z_{PR}) for pilot applications or other non-pilot time-delayed tripping applications such as [reverse] backup bus protection.

Two three-phase, one phase-to-phase and three phase-to-ground operating units per zone with independent settings.

Three phase-to-ground zone-1quadrilateral units.

Independent phase and ground timers.

Cross-polarized dynamic mho characteristics.

Pilot options include Blocking, Unblocking, POTT and PUTT.

Two or three terminal line protection, current reversal blocking, weak feed key and/or trip, and open breaker echo keying.

Coordinate with any existing high-speed remote DCB terminals (KDAR, Uniflex, SKDU, etc.) with high-speed carrier starting, blocking coordination timer and carrier continuation logic.

Carrier receive pulse stretcher to provide security against momentary dropout of blocking carrier signal.

Pilot reclose blocking for delayed remote clearing.

One cycle operation for zone 1 and pilot faults to 80% of set reach.

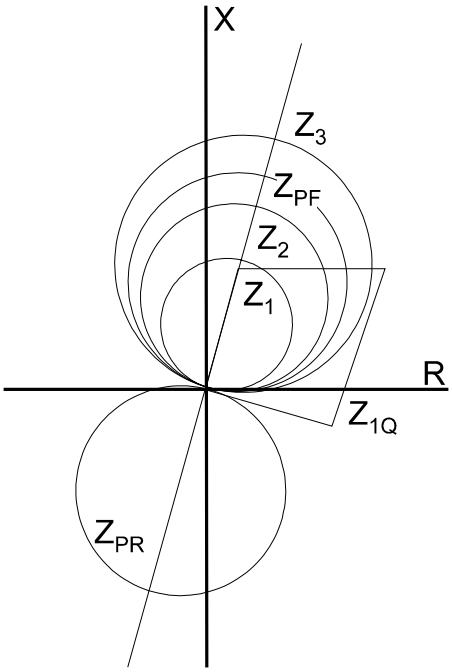

REL 512 Impedance Zones of Protection

ABB

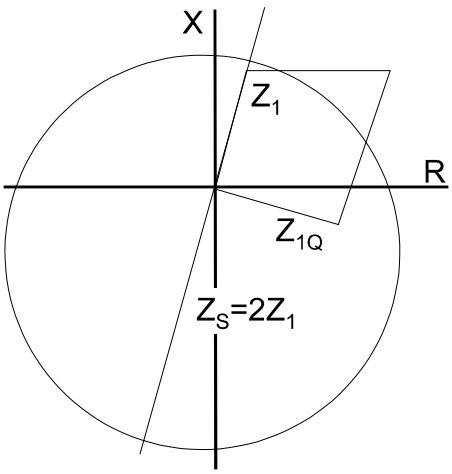

Cross-polarized Mho characteristic for Source Impedance to Zone Impedance Reach Setting Ratio (SIR) = 2

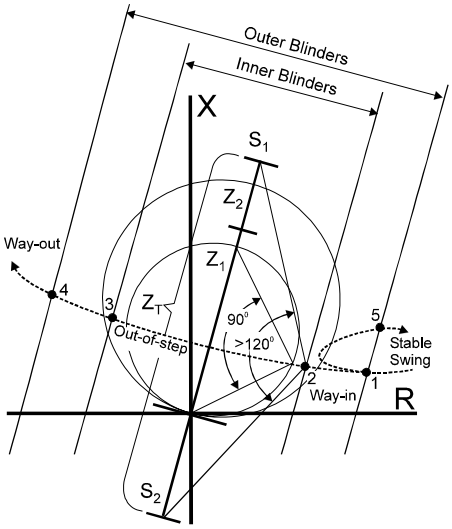

Dual Blinder Out-of-step Logic

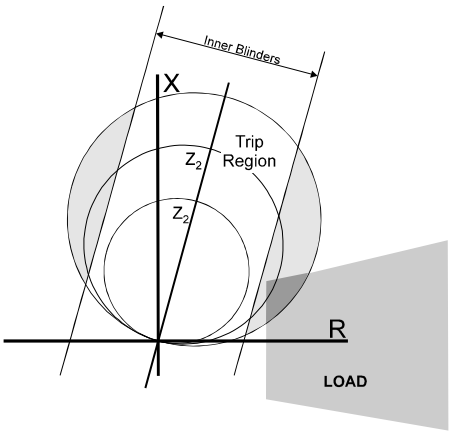

Load Restriction Logic

Out of Step Detection Logic

Dual blinder detection logic.

Choice of block or trip for out-of-step.

Selectable trip on way-in or way-out of characteristic.

Load restriction (encroachment) logic

Overcurrent Functions

High set directional or non-directional phase, ground and negative sequence overcurrent tripping.

Directional or non-directional supervision or zone-2 control of phase, ground and negative-sequence inverse-time overcurrent tripping.

All inverse-time overcurrent functions offer choice of instantaneous or time-delayed reset.

Overcurrent supervision of distance units provides secure operation for loss of potential conditions, during 3 phase faults, and bus-transfer operations.

Medium set ground directional overcurrent for high speed pilot operation on high resistance ground faults.

Medium set ground and negative sequence overcurrent tripping.

Voltage Units

Two three-phase overvoltage tripping units that operate on any sustained phase overvoltage.

Ground overvoltage and phase undervoltage for LOP and other logic functions.

Programmable Inputs and Outputs

Eighteen trip rated outputs (30A for 1 sec.)

One fixed outputs for failure alarm, three for tripping, and two for pilot channel start and stop.

Twelve additional user programmable outputs.

All outputs can be set normally open or closed.

Optional high-speed output board that provides 4-6 ms improvement in output relay operating time.

Twelve programmable binary inputs that can be set on (logical 1) or off (logical 0) with no voltage applied and inverts with applied voltage.

The voltage rating of each binary input is jumper selectable.

Programmable logic with on/off timers or latch set/reset functions.

Breaker Failure Protection (Optional)

Breaker re-trip function.

Separate, independent phase and ground overcurrent settings.

Separate, independent phase and ground breaker failure time delays.

Trip Logic

Three pole trip logic.

Single pole trip with 62T timer logic.

Reclosing (Optional)

Optional automatic reclosing that operates independently of the line protection, and can be internally or externally initiated.

Suitable for single breaker or ring bus applications (one relay per breaker).

Four programmable reclosing shots can be set for initiation type (52b, RI, external), closing permissions, voltage/sync-check, desired and time delays.

Accurate synchronism checking offers a choice of bus and line voltage angle measurement or phasing voltage across open breaker.

HLDB, HBDL OR DLDB voltage check.

Hold timing, skip shot, drive to lockout, and single pole reclosing features are included.

Manual or SCADA breaker closing supervision.

Breaker operation limit function.

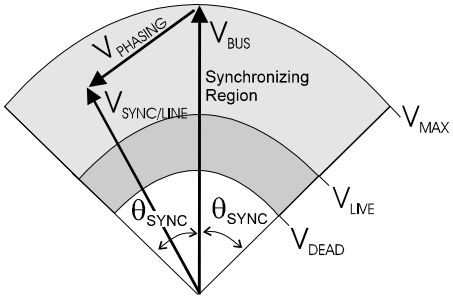

Line and Bus Angle Comparison

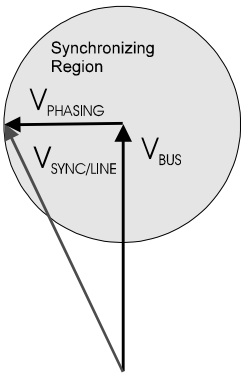

Breaker Phasing Voltage

Synchronism Check Methods

Settings

Eight protection setting groups are provided for adaptive flexibility.

Active protection settings group can be selected via external binary input [via control switch] or communication ports.

Selected communication protocol settings.

SECURE ONE CYCLE OPERATION

High-energy faults cause fast tripping while the response is slower for low- energy or zone-boundary faults. This results in a highly reliable inverse-time operating characteristic. The relay provides reliable one cycle operation for zone 1 faults within 80% of the zone reach setting. The operating times are typically 8 to 12 ms when using the Relay Output Accelerator Module.

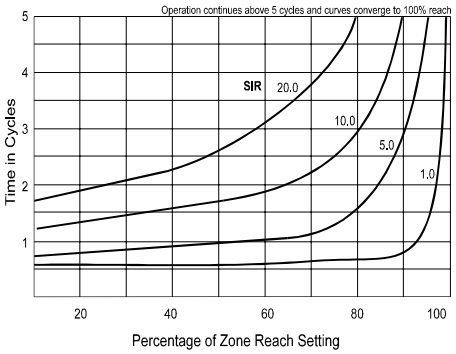

Operating Speed for a Zone-1 Trip

Reach settings can be set to 90 to 95% of the protected line's total impedance depending on accuracy of instrument transformer ratios and line impedance calculations. Transient overreach of the distance elements due to asymmetrical fault current and CVT transient voltage does not occur due to the adaptive nature of the inverse-time operating characteristic.

FAULT LOCATOR

The REL 512 utilizes a highly accurate fault location algorithm with fault resistance and load compensation. By measuring prefault and fault voltages and currents, the source impedance is estimated and accurate compensation for fault resistance and load is achieved.

DIGITAL FAULT RECORDER

Data on the most recent 20 faults are time-tagged with one ms resolution and stored in digital fault records. A fault summary provides the date and time, fault type and fault location for each of the saved fault records.

Each digital fault record provides detailed data for operation analysis and includes voltage and current analog channels and 185 digital channels that showing measuring elements, key relay logic signals, and I/O digital signal status with 0.833 ms resolution at 60 Hz (1.0 ms at 50 Hz).

Each fault record provides 2 cycles of prefault (pre-trigger) and 14 cycles of fault data with a sampling frequency of 1200 Hz (20 samples per cycle at 60 Hz) or 1000Hz (20 samples per cycle at 50 Hz). Special logic is provided to record additional records (evolving faults and fault clearing) if the event is longer than 14 cycles.

A fault record can also be triggered from the communications interface or binary voltage input.

All protection settings and programmable logic are downloaded with each fault record.

RELWAVE fault analysis software is provided for detailed analysis of the fault event.

ADVANCED DIAGNOSTICS

Advanced relay diagnostics eliminates the need for extensive installation evaluation testing and scheduled periodic maintenance. The concept of self-diagnostics on the REL 512 is to perform tests on individual components at programming time, boot and in operation. Once the REL 512 boots, a set of checks are done continuously to ensure integrity of software and hardware.

COMMUNICATIONS

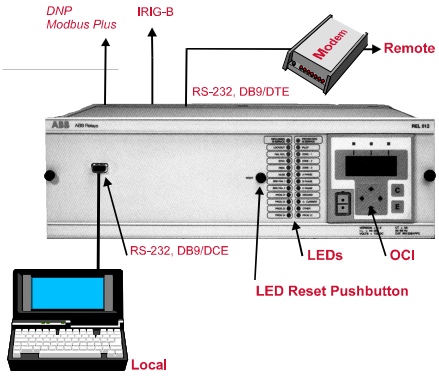

Multiple Communication Styles

Operator's Control Interface (OCI)

Front panel user interface communications include a 4 x 16 character back lit LCD with multifunction keypad, plus 24 LED's for status, target indication and a reset push-button. With the OCI the user can:

Edit active group settings.

change active settings group.

View fault distance and faulted phase data.

Twenty-four LED's are also provided to indicate:

Tripping, fault recording, measuring units or logic that operated and fault type indication.

Relay in service.

Pilot system in service.

Reclosing in service with synchronism, HLDB and HBDL indication.

Breaker 52b position for two breakers.

Trip coil monitors for two trip coils.

ASCII Terminal Emulation

Front and rear communications ports are provided for local and remote computer access with "off-the-shelf" industry standard ASCII terminal emulation software such as Windows HyperTerminal. Capabilities include:

Intuitive interactive interface.

Transfer settings and fault data efficiently with communication rates up to 115200 baud.

View, edit, upload or download settings and programmable logic.

View event operation history and download fault records.

Metering and I/O status monitoring.

Monitor measuring units and logic signal status.

Control outputs.

Reset LED's and trigger a fault record.

Network Communications

High speed data communication network interfaces to the Pricom Plus substation automation or other SCADA system are also available. A communications module is provided for protocol translation. This allows communication directly to the REL 512 for analog and status information and output contact control. Two network interface modules are available DNP 3.0 and Modbus Plus.

DNP 3.0

Level 2 implementation.

Control I/O.

Control Breaker.

Enable/disable pilot and reclosing functions.

Monitor status of LED's, I/O and key logic signals.

Metering (Volts, amps, watts, vars, PF).

Receive fault data.

Modbus Plus

Control Breaker.

Monitor status of LED's, I/O and key logic signals.

Metering (Volts, amps, watts, vars, PF)

Read and write settings.

Receive fault data.

Synchronized Timing

Two rear panel IRIG-B connections are available for modulated or demodulated signals. Refer to outline drawings on page 7.

ABB

RELTOOLS

Product Support Software

RELTOOLS is a group of software programs that support the REL 512 application, configuration and operational analysis. The programs consist of a settings editor and advisor, a programmable logic editor and a fault analysis tool.

RelWise-Settings Editor and Advisor

RELWISE provides a means to edit, view, store and print REL 512 settings off-line. The settings can then be uploaded to the relay with the ASCII communications software being used. RELWISE also serves as an advisor by providing complete settings application information. As part of this package a complete on-line settings application manual is provided.

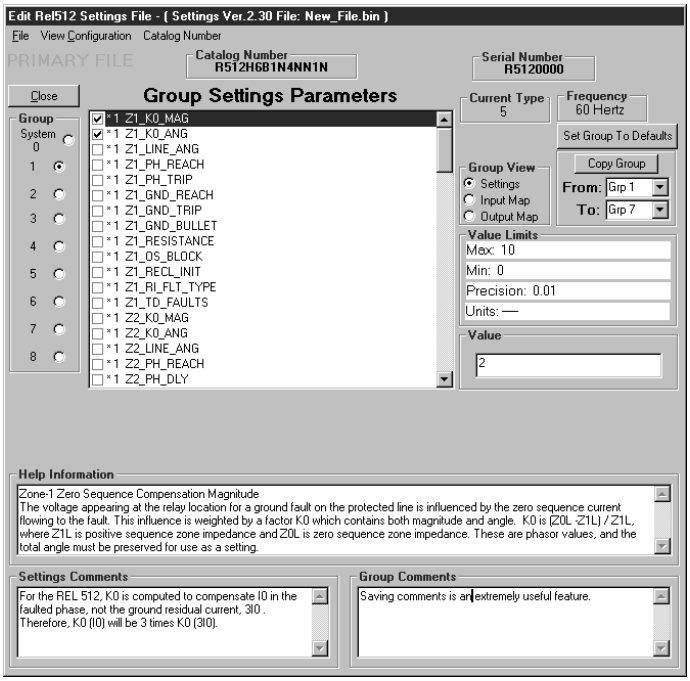

Editing Group 1 of Protection Settings

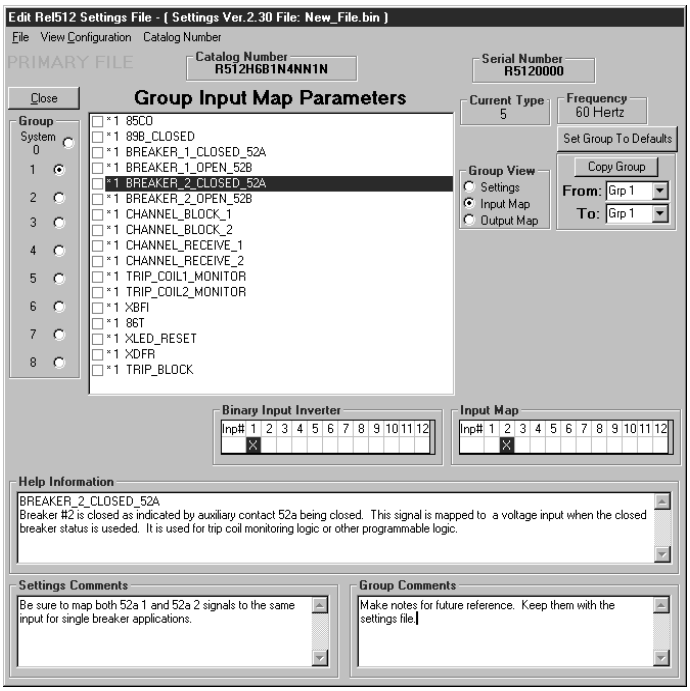

Mapping Group 1 Binary Inputs

Additional key features are:

Help information window with the setting definition and any equations required to compute the setting.

Settings and settings group comment windows to record any specific comments related to the setting or settings group application.

Display of relays serial and catalog number for accurate [location] identification.

Display of setting value, setting range and precision, and settings group number.

Copy group settings.

Map logic signals to I/O

Invert Inputs.

Upgrade older settings database versions.

RelLogic-Programmable Logic

Sixty-four relay logic and binary input status' are available to program up to six timer and two flip-flop units. Each timer unit output is provided with a on-delay and off-delay timer. Each flip-flop can be programmed to set and reset a contact output. Each timer and flip-flop can control up to 12 output contacts.

The programmable logic is programmed with RELLOGIC software which provides an intuitive interface for the user. The logic file is developed on a personal computer and uploaded to the relay using the communications software being used.

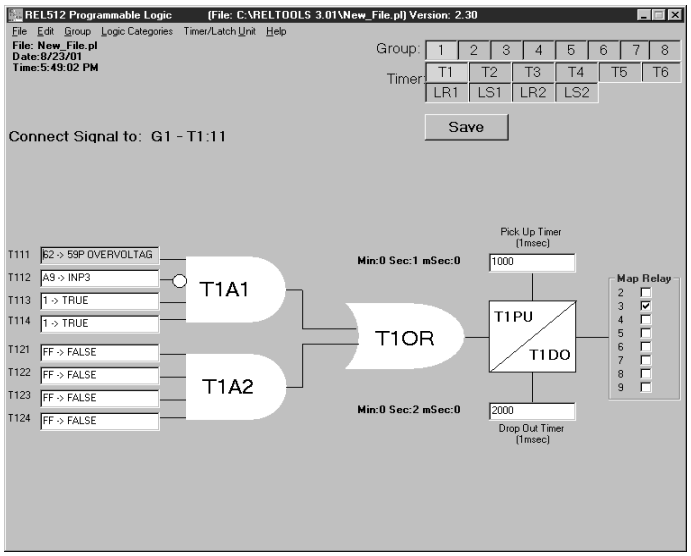

Programming Timer 1 of Group 1 to Output Relay 3

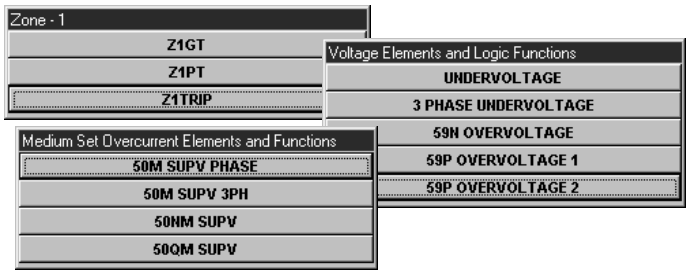

Organized Logic Categories

RelWave Fault Analysis

The REL 512 is supported by a comprehensive software fault analysis tool which provides graphical and analytical tools for accurate fault analysis. RELWAVE provides many advanced features such as two terminal fault location, synchronized analog and digital plots, 0.833 milli-second resolution (1.0 ms for 50 Hz), phasor display, harmonic analysis and impedance plots. RELWAVE features include:

Convert fault records to the IEEE standard COMTRADE file format for event recreation and testing. Convert data to a text file that can be imported into a spread sheet.

Superimpose two files graphically and compare analog quantities and digital operations. This is ideal for two terminal fault analysis.

Zoom features allow you to focus on a region of the file.

Perform fault location analysis for any cycle of the fault.

Compute phase and sequence quantities for any cycle of the fault.

Analyze the harmonic content of selected waveforms.

Plot voltage and current phasors.

Plot the fault impedance locus from load to fault and superimpose impedance characteristic.

Display Relay's faulted phase selection.

Select from 11 analog and 180 digital signal plots to display and print.

Measure time between two points on a wave form or two measuring unit operations.

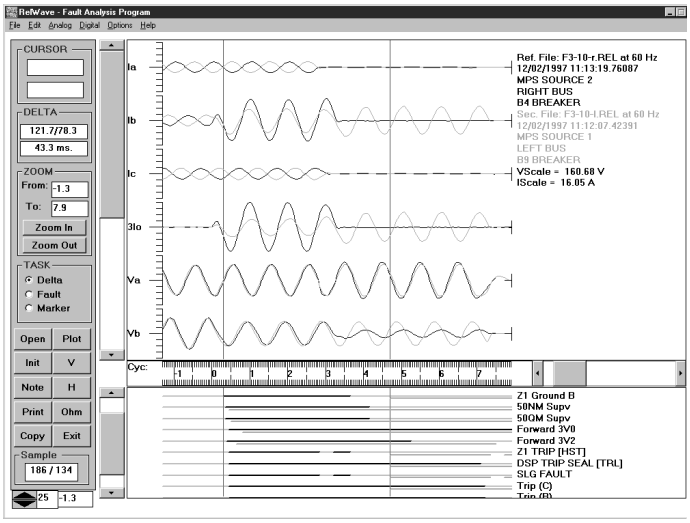

Two Terminal Analysis Showing Zone-1 Sequential Clearing

In the above screen data from two terminals are displayed showing each relay's operation. The fault is a BG fault at 1/5 the line length from the RIGHT BUS (near terminal) and has a 3.2 secondary ohm fault resistance. The relay zone-1 reach settings are 95% of the line length.

The near terminal operates at 0.5 cycle and far terminal at 4.7 cycles. This is expected and is a classic case of sequential clearing. The far end cannot see the fault until the near terminal breaker opens.

In the screens to the right the fault is computed to be 20% of line length from near terminal and fault resistance is computed to be 3.2 ohms secondary. The fault impedance of the far terminal is plotted. It is shown to move from the load to a point outside characteristic until remote terminal opens. Then moves inside characteristic. The phasors of the phase and sequence voltage and currents are plotted for the far terminal showing the operation of digital signals for that one cycle period.

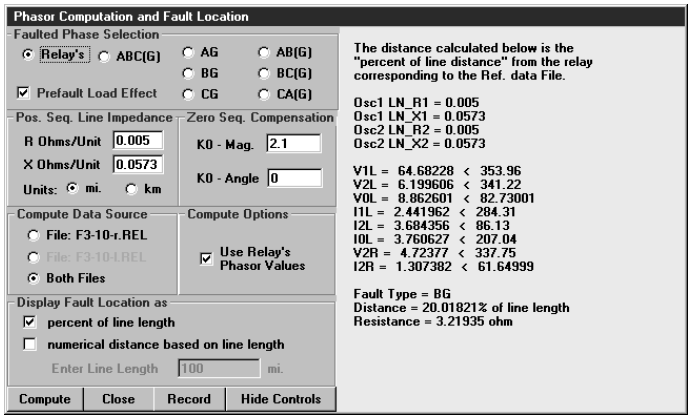

Two Terminal Fault Location of Selected Files

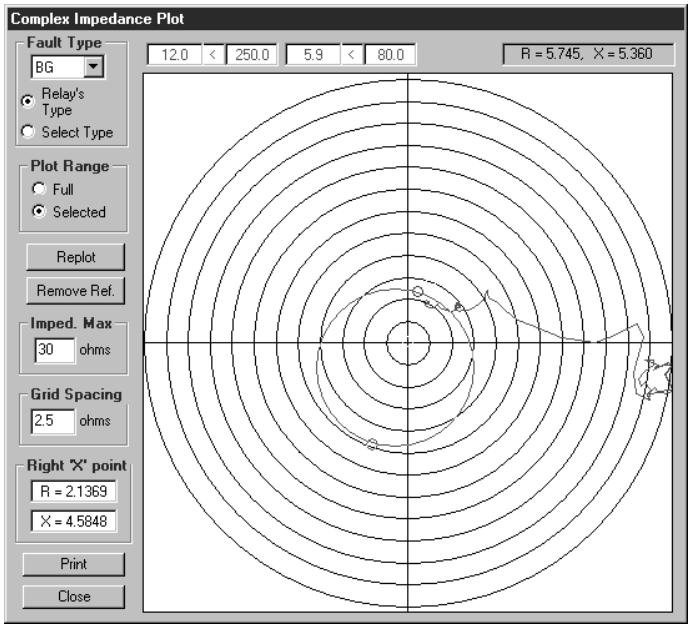

Impedance Locus Plot As Seen From Far Terminal

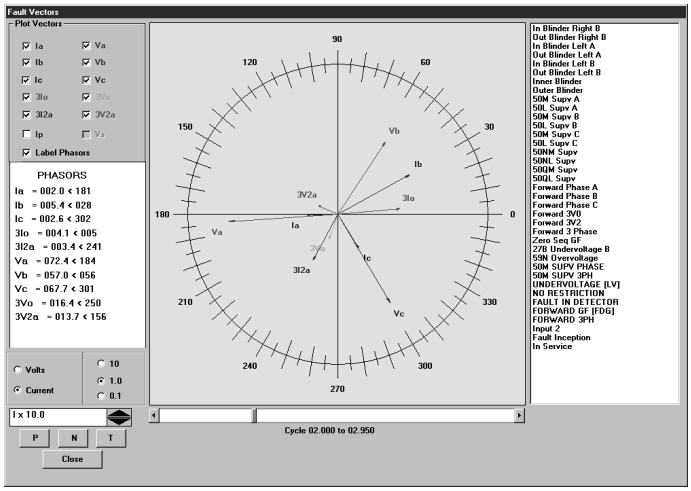

Phasor Plot for Cycle 2.0 to 2.95

ABB

HARDWARE/FIRMWARE

Main Board (Protection)

The main board block diagram shows the overall arrangement of the hardware in the REL 512. Line voltages and currents from the power system instrument transformers are connected to isolating transformers, surge suppression, and antialiasing filters. The ac inputs are connected through a multiplexer to the analog conversion subsystem. An A/D converter measures instantaneous samples of these ac signals 20 times per cycle and sends them to the digital signal processor (DSP) and central processing unit (CPU) memory. Status of the binary inputs are also simultaneously scanned.

All relaying measurements and logic are performed by firmware executed in either the DSP or CPU. Settings are stored in the EEPROM.

The DSP computes the operational status of 87 measuring units (impedance, directional, overcurrent units) and the high-speed logic 20 times per cycle. Additionally, the DSP collects the sampled analog data and the measuring unit and logic status and hands it off to the CPU for processing of protection functions and fault records.

The CPU synchronizes and processes the data from the DSP and binary inputs every sample. It computes the CPU measuring units and logic every 1/4 or 5/4 cycle depending on the logic function. For example: pilot functions are computed in 1/4 cycle increments while zone-2 timing is counted in 5/4 cycle steps. The CPU performs tripping or other output control through a series of output relays (contacts) shown on the block diagram. In addition, the CPU provides and manages the communication interfaces to the relay via the operator's control interface (OCI), RS-232C serial ports or a network module interface. It also manages the recording of fault data to the battery backup RAM. This will allow the relay to keep the fault data should the relay lose its power.

Flash memory is provided to store the relay's firmware on the main board Every time the relay is energized or the system is reset, the DSP and CPU are booted from the flash memory on the main board. When upgrading the relay's firmware, the flash memory is re-programed with the new firmware from a laptop computer through its parallel port to a flash port connection on the main board.

Reclosing Board (Optional)

The REL 512 recloser operates independent of the protection function and has separate voltage inputs to provide application flexibility. Measurement and reclosing logic are controlled through a microprocessor similar to the main board. The recloser also has 8 analog outputs for legacy SCADA interfaces. The reclosing firmware is stored in flash memory and can be upgraded in the same method as the main board.

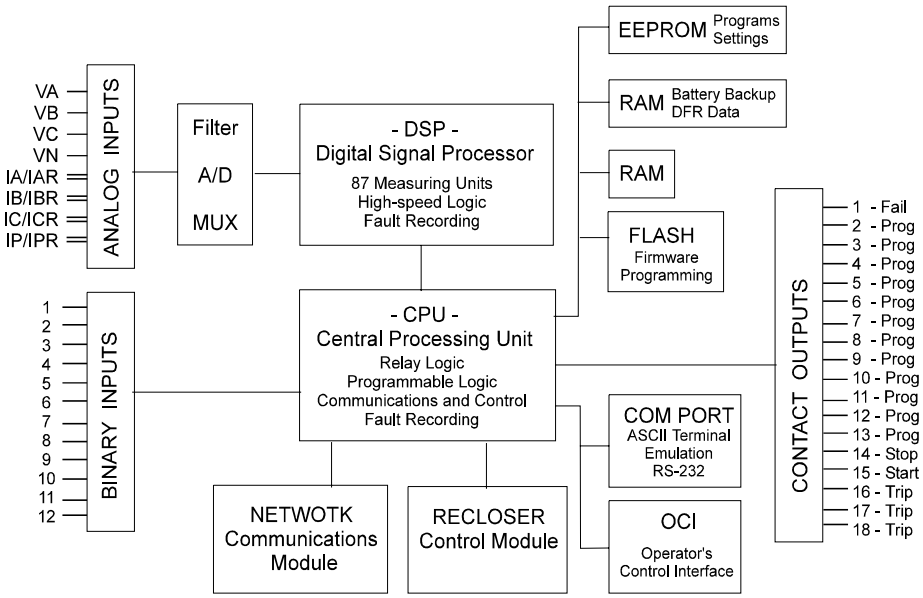

Main Board Block Diagram

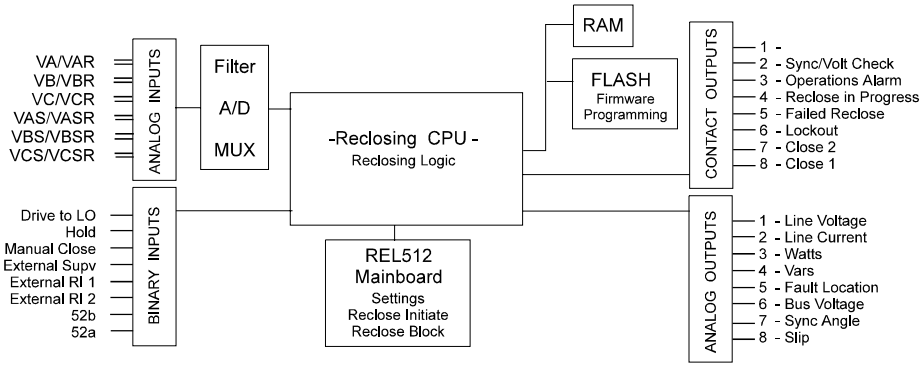

Reclosing Board Block Diagram

Network Communication Board (Optional)

The network communications board is available to provide an efficient high-speed communications interface between the REL 512 and the host automation or SCADA system. The main board continuously updates the communications board's memory registers, which are polled by the host automation system. The network communications board firmware is stored in flash memory and can be upgraded in the same method as the main board.

Relay Output Accelerator Board (Optional)

The relay output accelerator decreases the relay output (circuit closing) time by 4 to 6 ms. Field effect transistors (FET) parallel the output relays providing high speed circuit closing. The relay contacts follow closely and effectively carry the circuit load after 6 ms and will interrupt the circuit when the relay is de-asserted. The combined FET/relay output is trip rated. Trip circuits should, however, be interrupted with external devices like the breaker 52a auxiliary switch.

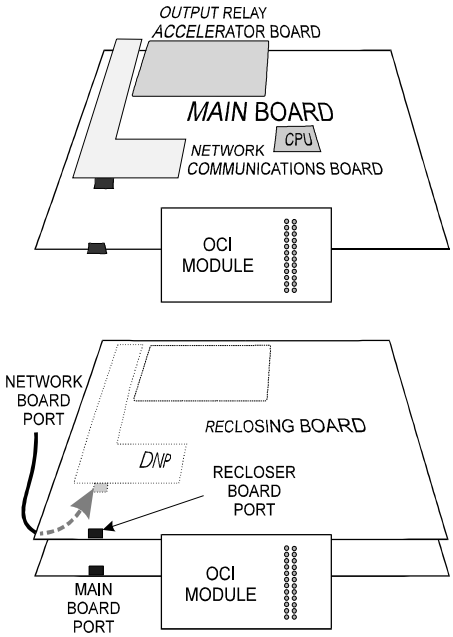

REL 512 Main and Option Boards

MEASURING UNIT SETTINGS

Impedance Measuring Units

Five protection zones: zone-1, zone-2, zone-3, forward pilot and reverse pilot. Each zone has six impedance mho units. They are:

2 - Three phase impedance units
1 - Phase-to-phase impedance unit, and
3 - Phase-to-ground impedance units.

Zone-1 has an additional 3 phase-to-ground quadrilateral units.

Reach: 0.03 – 36 (5A) or 0.15 – 180 (1A) ohms.

Line angle: 10^0 - 90^0 .

Zero sequence compensation Ko magnitude each zone: 0.0 to 10.0, Ko Angle: -120^0 to 40^0 .

Zone-2, zone-3, forward pilot and reverse pilot zone time delayed trip: 0.0 to 10.0 seconds.

Zone-1 quadrilateral resistance reach: 0.03 – 36 (5A) or 0.15 – 180 (1A) ohms.

Blinder Units

Two sets of impedance blinders provide for out-of-step block and trip functions, and load encroachment logic.

Inner and outer blinder resistance reach: 0.03 – 36 (5A) or 0.15 – 180 (1A) ohms.

Blinder angle: 10^0 - 90^0 .

Instantaneous Overcurrent (Type 50) Units

Instantaneous (Type 50) Units.

Three high set phase units: 2-100 A. (5A) or 0.4 – 20 A. (1A).

One high set ground unit: 2-100 A. (5A) or 0.4 – 20 A. (1A).

One high set negative sequence unit: 2-100 A. (5A) or 0.4 – 20 A. (1A).

All high set units can be set to trip with or without directional supervision.

Medium set Phase unit: 0.25-20 A. (5A) or 0.05 – 4 A. (1A).

Medium set forward directional ground unit: 0.25-20 A. (5A) or 0.05 – 4 A. (1A).

Medium set forward directio.nal negative sequence unit: 0.25-20 A. (5A) or 0.05 – 4 A. (1A).

Medium set ground unit timer: 0.0 to 10.0 sec.

Medium set negative seq timer: 0.0 to 10.0 sec.

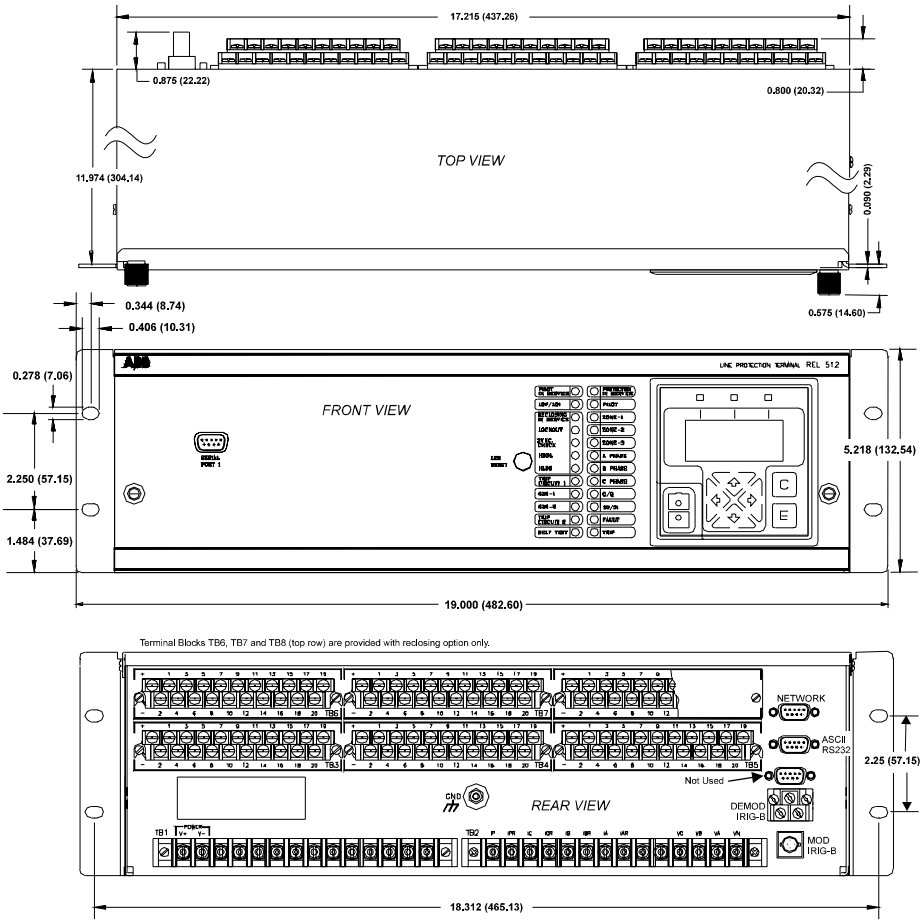

REL 512 Outline Drawing With Terminal Blocks and Communication Interfaces

Low set phase unit: 0.25-20 A. (5A) or 0.05 – 4 A. (1A).

Low set ground unit: 0.25-20 A. (5A) or 0.05 – 4 A. (1A).

Low set negative sequence unit 0.5 A. (5A) or 0.1 A (1A) logic.

Time Overcurrent (Type 51) Units

3 – Phase, inverse time, overcurrent phase units 0.25-20 A. (5A) or 0.05– 4.0 A. (1A) with directional or Zone-2 phase torque control.

1 – Ground, inverse time, overcurrent phase units 0.25-20 A. (5A) or 0.05– 4.0 A. (1A) with directional or Zone-2 ground torque control.

1 – Negative sequence, inverse time, overcurrent units 0.25-20 A. (5A) or 0.05 – 4.0 A. (1A) with directional or phase, and/or ground Zone-2 torque control.

Settings constants are based on the proposed IEEE Standard C37.112, and emulate any curve including CO and IEC time curve characteristics.

Selectable reset time curve.

Voltage Units

Phase undervoltage units: 40-60 V.

Ground voltage ($3V_0$): 0-120 V.

Phase overvoltage unit 1 : 60 - 180 V.

Phase overvoltage unit 2 : 60 - 180.

Phase overvoltage unit 2 timer : 0.0 - 10.0 sec.

MEASURING UNIT ACCURACY

Impedance Units

Impedance reach accuracy is less than 3% underreach and 0% overreach for SIR less than 10. Operating times (page 3) are based on the system equivalent SIR at the relay.

Overcurrent Units

The operating accuracy of the overcurrent units is less than 2%, and the dropout to pickup ratio is greater than 0.95.

Typical operating time error for the applied current is the computed time based on settings plus 40 ms. Larger errors can exist for very low currents with long operating times.

Voltage Units

The operating accuracy of the phase undervoltage units is less than 2% of the setting, and the dropout to pickup ratio is less than 1.05.

The operating accuracy of the phase and ground overvoltage unit is less than 2%, and the dropout to pickup ratio is greater than 0.95.

Directional Unit Sensitivity

The minimum operating sensitivity is less than 1.0 VA for voltage polarized ($3V_0$ x $3I_0$) units and 1.0 A^2 for the current polarized (I_P x $3I_0$) unit.

ABB

PLATFORM RATING AND TOLERANCES

Analog Input Circuits

Input	Rating
5.0 A Rating	16 A continuous, 450 A for 1 second
1.0 A Rating	3 A continuous, 100 A for 1 second
CT Input Burden	Less than 0.1 VA @ 5 A
Voltage Rating (69/120 V Wye)	160 V continuius, 480 V for 10 seconds
VT Input Burden	Less than 0.2 VA @ rated voltage
Frequency	50 or 60 Hz

Binary (Voltage) Input Circuits

Input	Burden
24 V dc	Less than 0.16 VA
48 V dc	Less than 0.16 VA
125 V dc	Less than 0.44 VA
250 V dc	Less than 0.44 VA

Relay (Contact) Output Circuits

Circuit Voltage	Trip Rating	Continuous Rating	Circuit Break Rating Resistive / Inductive
24 - 250 V dc	30 A	8 A	50 W / 15 VA
120 V ac	30 A	8 A	50 W / 15 VA

Control Power Requirements

Control Voltage	Amps (Burden)	Operating Voltage Range
48 V dc	0.35	33 to 58 V dc
125 V dc	0.17	85 to 150 V dc
250 V dc	0.085	170 to 300 V dc
120 Vac	0.17	108 to 132 V ac

Operating Environment

Parameter	Value	ANSI	IEC
Operating Temperature	-25° C to 70° C	C37.90	255-6
Storage Temperature	-40° C to 80° C	C37.90	255-6
Humidity	Up to 95% without internal condensation	C37.90	68-2-30
Insulation Voltage	2.8 kV dc, 1.0 minute	C37.90	255-5
Impulse Voltage	5.0 kV peak, 1.2 X 50 u s	C37.90	255-5
Oscillatory Surge Withstand	2.5 kV, 1 MHz	C37.90.1	255-22-1
Fast Transient	4.0 kV peak, 10 X100 ns	C37.90.1	255-22-4
EMI Volts/Meter	35 V/m, 25 MHz -1.0 GHz	C37.90.2	1000-4-3
ESD	Electro-static discharge		255-22-2

Metering Accuracy

Quantity	Average % Error	Maximum % Error
Voltage (10 - 120 V)	1.0	2.0
Current (1.0 - 5.0 A)	1.0	2.0
Watts (PF = 1.0)	1.5	3.0
VARs (PF = 0)	1.5	3.0
Watts (PF = 0.866)	2.0	3.0
VARs (PF = 0.866)	1.5	3.0

* The error is less than the values shown. The average error is the error averaged over a long period of time (1 minute). The maximum error is a momentary maximum as read from the metering screen.

Dimensions and Weight

Parameter	English Units	Metric Units
Height (3 RU)	5.218 in	132.54 mm
Width	19.00 in	482.00 mm
Depth	12.75 in	324.46 mm
Weight (max / all components)	26.00 lbs	11.80 kg

CATALOG NUMBER

Options	Catalog # R512		H	6	B	1	N	4	D	N	1	N
Mounting	Horizontal Vertical	H V	**H**									
Frequency	50 Hz 60 Hz	5 6		**6**								
Current Rating	1.0 A 5.0 A	A B			**B**							
Battery Voltage	24 V dc 48 V dc 110/125 V dc 220/250 V dc	5 4 1 2				**1**						
Breaker Failure Protection	With BF Logic None	B N					**N**					
Multi-shot Reclosing	Reclosing None	3 4						**4**				
Network Port #1	Modbus Plus DNP 3.0 None	M D N							**D**			
Future	None	N								**N**		
Trip Outputs	Standard (4 - 6 ms) High-speed (< 1.0 ms)	1 2									**1**	
Dust Proof Cover	Dust Proof Cover None	D N										**N**

ABB Inc.
Substation Automation and Protection Division
7036 N. Snowdrift Road, Suite 2
Allentown, PA 18106
Tel: 610 395-7333 Toll Free: 800 634-6005
Fax: 610 395-1055
Email: powerful.ideas@us.abb.com
Website: www.abb.com/substationautomation

ABB Inc.
Substation Automation and Protection Division
4300 Coral Ridge Drive
Coral Springs, FL 33065
Tel: 954 752-6700 Toll Free: 800 523-2620
Fax: 954 345-5329