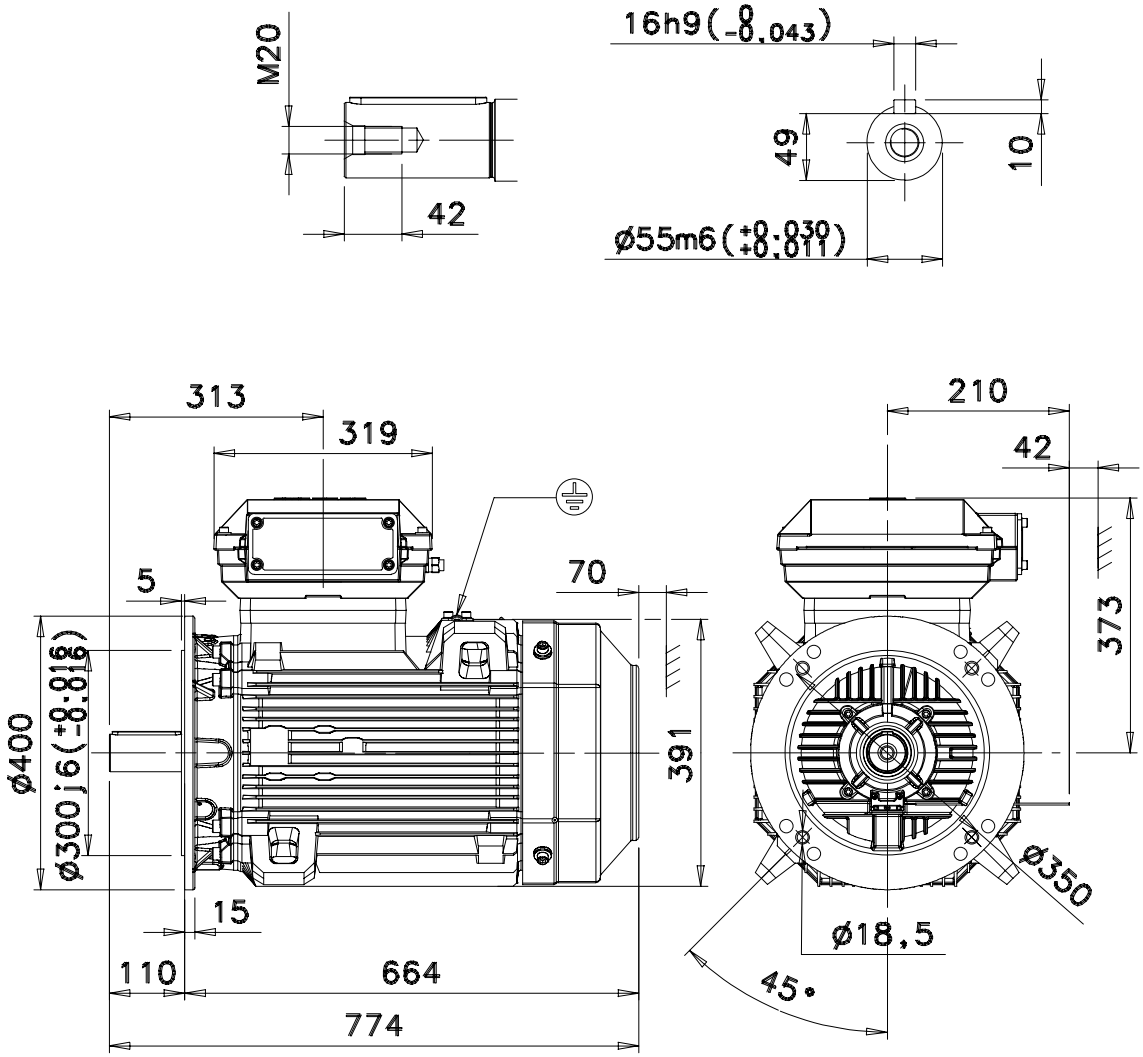

Additional information:

Dimension Print	Motor Type: M3KP 200ML_2-12 B5,V3	Document No: 3GZF500120-15 B 13 KP 200 A
Description: STANDARD SQUIRREL CAGE MOTOR		
Unit: Electrical Machines, LV Motors Date: 28.02.2001	Issued by: K.Edsvik Approved by: L.Järf	Replaces: Replaced by:
ABB Oy	Customer Reference:	ABB