Substation Automation Products

# Generator protection REG670/650
## Relion® 670 and 650 series

Power and productivity
for a better world™

# A new protection standard for your valuable assets

**Based on ABB's extensive experience, REG670 and REG650 IEDs (Intelligent Electronic Device) take generator protection to a new performance level that ensures unrivalled selectivity and sensitivity. REG670/650 provide protection and monitoring for generators, prime movers and step-up transformers in hydro, pump-storage, gas, diesel, combined-cycle, steam, nuclear, cogeneration and renewable power stations. With excellent performance, flexibility and scalability, they fulfill the demanding requirements of both new and retrofit installations – in every corner of the world.**

A generator protection system with REG670/650 meets the requirements for maximum dependability and availability. The differential protection internal/external fault discriminator is based on negative sequence current values, enabling fast and selective decision to operate. The unique main protection functions are able to selectively detect and clear all fault types over 100% of the stator winding. The detection criteria can be used to create intelligent, application-specific functions to enhance your protection system, enabling it to meet very specific requirements, for instance, when the operating conditions of the plant change.

REG670/650 place low requirements on instrument transformers, which, together with the fast and accurate protection functions, reduces primary equipment demands and investment costs.

## REG670 – for any type and size of generator and generator-transformer unit

REG670 IEDs provide customized and pre-configured protection solutions for any type of generator and block connected generator-transformer unit. Due to its unique capabilities it is especially suitable for protecting large turbo and hydro units including pump-storage power plants.

The customized REG670 gives you the freedom to select functionality entirely according to your needs.

The generator differential protection of REG670 features extremely fast detection criteria, with a typical operate time of 15 ms – and yet the IED maintains high security. The transformer differential protection integrated in REG670 provides extremely fast differential protection with automatic ratio matching and vector group compensation. Additionally, it takes the tap-changer position into consideration for optimized sensitivity. Utilizing the same transformer differential protection used in Transformer protection RET670 allows REG670 to be a complete protection solution for generator-transformer units.

## Unique functional integration

REG670 integrates parallel algorithms with advanced logic and communication. Up to 24 analog inputs permit integration of main and back-up protection in one IED. This allows you to protect several objects with a single REG670 IED. For instance, by integrating several differential protection functions, one single REG670 IED can protect a complete generator-transformer unit. The under impedance protection function can also be used as back-up protection for faults within the unit or external faults in the power network.

Alternatively, additional objects, such as transformers, can be included in the generator protection scope. This enables full duplication of the protection in main one and main two. All this reduces the number of IEDs needed to protect the entire generating station, increasing availability at the same time. This in turn simplifies the installation and reduces its lifecycle cost from commissioning to maintenance and spare parts.

The dedicated measurement class input current transformers of REG670 enable detection of power level down to 0.5% of the unit rated power, which ensures accurate reverse power protection in steam-turbine applications.

# The right information for the right action

In demanding applications, such as pump-storage plants, the unit has several operating modes: generating, pumping, starting or breaking. In such applications, the protection IED needs to adapt to the actual operating mode. The logical programming capability of the REG670 allows it to automatically detect the actual operating mode of the unit and adapt its operation accordingly. The selected operating mode can be shown on the built-in IED HMI, which is useful especially during commissioning and testing.

The distance between the generator and the high voltage substation can in many cases be substantial and yet many binary signals need to be exchanged between the two locations. REG670 features a dedicated fiber optic communication link to exchange binary signals with another 670 series IED located in the high voltage substation. Up to 192 binary signals for indication, alarming and tripping purposes can be sent to both directions simultaneously.

REG670 also features injection-based 100% stator ground-fault protection and 3rd harmonic based 100% stator ground fault protection. These solutions enable a new way to optimize the cost-performance ratio of the protection system in relation to the importance or size of the generating station. The 3rd harmonic based 100% stator ground-fault protection utilizes the differential principle, which provides high sensitivity and security. This ensures correct operation even during low load conditions.

**Stator and rotor windings protected under all operating modes**

When the injection-based protection of REG670 is used, 100% of the machine stator winding, including the star point, is protected under all operating modes, even at machine standstill. The innovative filtering technique enables high sensitivity for both stator and rotor protection, which enables early detection of faults.

Additionally, ABB's innovative implementation of the injection principle does not require any changes in the plant primary circuit because injection is always done on the secondary side of the voltage or grounding transformer irrespective of the actual grounding method used. This enables very cost-efficient design of the injection unit, and makes it very easy and fast to take the protection system into operation. Thus REG670 offers an optimum solution for large hydro and turbo machines.

A special tool module accessed via Protection and control IED manager PCM600 significantly simplifies the commissioning and operation of the injection-based stator and rotor ground-fault protection functions. Additionally, the tool module guides the user through the installation and calibration procedure to achieve sensitive protection.

At the end of the calibration process the tool verifies the validity of the calibration parameters which ensures proper operation of the installation taking into account all the characteristics of the installation.

### REG650 – your best choice for small and medium-sized generators

REG650 offers optimum 'off-the-shelf', ready-made solutions, including all the required functionality for protecting small and medium-sized generators. With its 20 analog inputs, REG650 is one of the most compact generator protection devices on the market. This allows, for instance, the integration of overcurrent protection for excitation or auxiliary transformer, in addition to generator protection. The 3rd harmonic based 100% stator ground-fault protection utilizes the differential principle, which provides high sensitivity and security. This ensures correct operation even during low load conditions.

The type-tested variants of REG650 IEDs are delivered equipped and configured with complete functionality and with default parameters for easy handling of products – from ordering, engineering and commissioning to reliable operation. Depending on the selected variant, either low impedance generator differential protection or three winding transformer differential protection is included. Other generator protection functions are always included.

The 650 series IEDs introduce a number of innovations, such as a significantly reduced number of parameter settings and extended IED HMI functionality, including 15 dynamic three color-indication LEDs per page, on up to three pages, and five configurable push-button shortcuts for different actions. In the 650 series IEDs, most basic parameters are set before delivery from the factory. You only need to set the parameters specific to your application.

### The right information for the right action

The integrated HMI of REG670 and REG650 provides you with a quick overview of the status of the power plant with position indications and service values. Using a library of symbols, you can easily configure the graphical display to correspond to your needs and to your station. The built-in disturbance recorder, capable of storing data in COMTRADE format, provides you with valuable data for post fault analysis and corrective actions to increase the security of your power plant.

The two-position versatile switch and 32-position selector switch functions of REG670/650 IEDs enable you to easily

manage switching operations via an icon on the IED HMI. The functions also present an indication of the selected position. The selector switch can replace an external mechanical selector switch which allows you to directly select the position you desire. In addition, these switch functions can be operated from a remote control system.

### Versatile communication capabilities

REG670/650 IEDs allow you to use several communication protocols in parallel to communicate with the plant control system, monitoring system or relay protection engineering office. They are designed for IEC 61850, implementing all aspects of this standard and thus ensuring open, futureproof and flexible system architectures, with state-of-the-art performance. These capabilities also provide new opportunities for utilizing signalling and tripping schemes in generator protection. Additionally, they enable the transfer of binary and analog data to any subscriber.

Relion® 670 series IEDs support IEC 62439 standard redundant communications on the station bus as per the IEC 61850 standard. The solution from ABB utilizes the IEC 62439-3 standardized Parallel Redundancy Protocol (PRP). PRP improves the communication system reliability and features a unique capability of zero seconds' recovery time in case of communication failures. This means that there will be no interruption in communication if one link fails as the other link instantaneously takes over the communication. As a result, there is no data lost when communication failures have occurred.

### Fast and efficient system integration

REG670/650 IEDs are more than just devices. They utilize ABB's unique connectivity package concept, which simplifies the system engineering and reduces the risks of errors in system integration. An IED connectivity package contains a complete description of the specific IED, consisting of data signals, parameters, addresses and IED documentation. Being designed for IEC 61850, it can easily be integrated in any power plant control system that is compliant with this standard.

### Relion® – Complete confidence

Generator protection REG670/650 IEDs are members of the Relion® protection and control product family. The Relion product family offers the widest range of products for the protection, control, measurement and supervision of power systems. To ensure interoperable and future-proof solutions, the Relion products have been designed to implement the core values of the IEC 61850 standard. With ABB's leading-edge technology, global application knowledge and experienced support network, you can be completely confident thatyour system performs reliably – in any situation.

## REG670 Technology summary:

### Features
- Fully IEC 61850 compliant
- Generator and transformer protection integrated in one IED
- Protection, monitoring and control integrated in one IED
- Extensive self-supervision including analog channels
- Six independent parameter setting groups
- Signal matrix for easy configuration of binary and analog signals
- Ethernet interface for fast and easy communication with PC
- Large HMI for visualization of single line diagrams

### Most important protection functions
- Generator differential protection
  - Differential currents calculated based on fundamental frequency and negative sequence
  - Percentage bias restraint
  - Internal/external fault discriminator (negative sequence based)
  - Higher harmonic block for 2nd and 5th
  - DC biasing
  - Suitable for split phase differential protection applications
- Transformer differential protection
  - Percentage bias restraint
  - Waveform and second harmonic restraint for transformer inrush
  - Fifth harmonic restraint for overexcitation
  - Automatic CT ratio matching and vector group compensation
  - High sensitivity for interturn faults
  - Open CT detection incorporated
- High impedance differential protection
- Restricted ground-fault protection
  - Extremely fast operation
  - High and low impedance based
- Injection-based protection
  - 100% stator ground-fault protection using REX060 injection unit
  - Sensitive rotor ground-fault protection using REX060 injection unit
- Back-up underimpedance protection
  - Full-scheme distance protection with Mho characteristic
- Pole slip protection
  - Detection of slips in power system from 0.2Hz to 8Hz
  - Discrimination between generating and motoring direction of rotor phase angle
  - Discrimination between local and external power swing center
  - Trip after a set number of slips
  - Trip within a set rotor angle
- Loss of/under excitation
  - Positive sequence measurement
  - Two zones Z1 and Z2 with independent block and trip
  - Directional element for zone restriction
- Directional power protection
  - Reverse power, low forward, active and reactive power protection
  - Phase angle compensation
  - Two steps (alarm/trip)
- Current
  - Instantaneous phase- and residual overcurrent protection
  - Four-step phase- and residual directional/non-directional overcurrent protection with definite and inverse time characteristics
  - Negative sequence overcurrent protection for machines
  - Split phase overcurrent protection
  - Accidental energizing protection for synchronous generator
  - Thermal overload protection
  - Breaker failure protection
  - Pole discordance protection
- Power functions
  - Directional under- and over power protection
- Voltage
  - Two step phase- and residual over-voltage protection with definite and inverse time characteristics
  - Two step undervoltage protection with definite and inverse time characteristics
  - Overexcitation protection
  - 3rd harmonic based 100% stator ground-fault protection
  - 95% stator ground-fault protection
- Secondary system supervision
  - Fuse failure supervision
  - Current circuit supervision
- Frequency functions
  - Over- and under-frequency protection
  - Rate-of-change frequency protection
- Multipurpose function
  - General current and voltage protection
  - Voltage controlled/restraint overcurrent protection
  - Rotor ground-fault protection using COMBIFLEX RXTTE4 injection unit

### Control functions
- Apparatus control for up to 30 apparatus
- Synchrocheck, energizing check and synchronizing
- Selectable operator place allocation
- Versatile switch with two positions
- Selector switch with up to 32 positions

### Logic
- Tripping logic
- Trip matrix logic
- Configurable logic blocks

### Monitoring
- Disturbance recorder
  - Up to 10 seconds of data before the trigger
  - Up to 100 disturbances
  - 40 analog channels, 30 physical and 10 derived
  - 96 Binary channels
- Event list for 1000 events
- Disturbance report
- Event and trip value recorders
- Event counters
- Supervision of AC and mA input quantities
- Small and large HMI
- LED indications with 6 red and 9 yellow LEDs

### Measurements
- V, I, P, Q, S, f, and cosφ
- Accuracy of AC input quantities, class 1.0 or 0.5
- Inputs for mA measuring

### Metering
- Energy metering function for energy statistics
- Pulse counting support for energy metering

### Communication
- IEC 61850-8-1 including GOOSE messaging
- IEC 60870-5-103
- LON
- SPA
- DNP 3.0
- Remote end communication for transfer of 192 binary signals

### Setting, configuration and disturbance handling
- Protection and control IED manager PCM600
  - Installation and commission tool module for injection-based protection

### Hardware
- Full 19“ case, 6U height with 24 analog inputs and up to 11 I/O modules
- Half 19“ case, 6U height with 12 analog inputs and up to 3 I/O modules
- Power supply modules from 24 to 250 V DC ± 20%
- Metering class input CTs
- Binary input module with 16 inputs
- Binary output module with 24 outputs
- Binary input/output module with 8 inputs and 12 outputs
- mA input module with 6 transducer channels
- GPS or IRIG-B time synchronization module
- Remote-end data communication modules
- Accessories

Technical details are available in the REG670 Product Guide.

## REG650 Technology summary:

### Features
- Fully IEC 61850 compliant
- Protection and monitoring integrated in one IED
- Extensive self-supervision including analog channels
- Four independent parameter setting groups
- Large HMI for visualization of single line diagrams and on-line measurements
- Integrated or detachable HMI with 1-5 m cable for flexible panel mounting
- Ethernet interface for fast and easy communication with PC
- Accurate time synchronization via SNTP, DNP 3.0, IEC 60870-5-103 and IRIG-B serial interface
- Signal matrix for easy configuration of binary and analog signals
- User management and authority handling

### Configured solutions
- Generator differential protection including all other necessary protection functions for a synchronous machine
- Unit (transformer) differential protection including all other necessary protection functions for a synchronous machine

### Most important protection functions
- Differential protection
  - Generator differential protection or transformer differential protection
  - 1-phase high impedance differential protection
- Impedance protection
  - Underimpedance protection for generators and transformers with load encroachment
  - Loss of excitation
  - Out-of-step protection
- Current
  - Voltage-restrained time overcurrent protection
  - Directional under- and overpower protection
  - Negative sequence overcurrent protection for machines
  - Accidental energizing protection for synchronous generator
  - Two step negative sequence based overcurrent protection
  - Four step phase and residual overcurrent protection
  - Rotor ground-fault protection using COMBIFLEX RXTTE4 injection unit
  - Sensitive directional residual overcurrent and power protection
  - Thermal overload protection
  - Breaker failure protection
  - Pole discordance protection
- Power functions
  - Directional under- and over power protection
- Voltage
  - 100% stator ground-fault protection, 3rd harmonic-based
  - 95% stator ground-fault protection
  - Two step residual overvoltage protection
  - Two step overvoltage protection
  - Two step undervoltage protection
  - Overexcitation protection
- Secondary system supervision
  - Fuse failure supervision
  - Breaker close/trip circuit monitoring

### Control functions
- Synchrocheck, energizing check and synchronizing
- Selectable operator place allocation
- Versatile switch with two positions
- Selector switch with up to 32 positions
- Selector switch with up to 32 positions

### Logic
- Tripping logic
- Trip matrix logic
- Configurable logic blocks

### Monitoring
- Disturbance recorder
  - Up to 3 seconds of data before the trigger
  - 100 disturbances
  - 40 analog channels (30 physical and 10 derived)
  - 96 binary channels
- Event list for 1000 events
- Disturbance report
- Event and trip value recorders
- Event counters
- Supervision of AC input quantities
- Indication of up to 135 binary signals via 15 three-color-state indication LEDs on up to three pages
- Insulation gas monitoring function
- Insulation liquid monitoring function
- Circuit breaker condition monitoring
- Station battery supervision

### Measurements
- V, I, P, Q, S, f, and cosφ
- Accuracy of AC input quantities, class 1.0

### Metering
- Energy metering function for energy statistics
- Pulse counting support for energy metering

### Communication
- IEC 61850-8-1 including GOOSE messaging
- DNP 3.0 slave protocol
- IEC 60870-5-103 serial communication

### Setting, configuration and disturbance handling
- Protection and control IED manager PCM600

### Hardware
- 1/2 x 19”, 6U height case
- 20 analog inputs (10+1 CT and 9 VT inputs)
- Universal 1A/5A CT inputs
- Communication and processor module with 14 inputs
- Binary input/output module with 9 inputs and 9 outputs
- Possibility to add one optional binary input/output module
- Power supply modules from 48 to 250 V DC or 100 to 240 V AC with 9 outputs, 3 of which with trip circuit supervision

Technical details are available in the REG650 Product Guide.

# Application examples

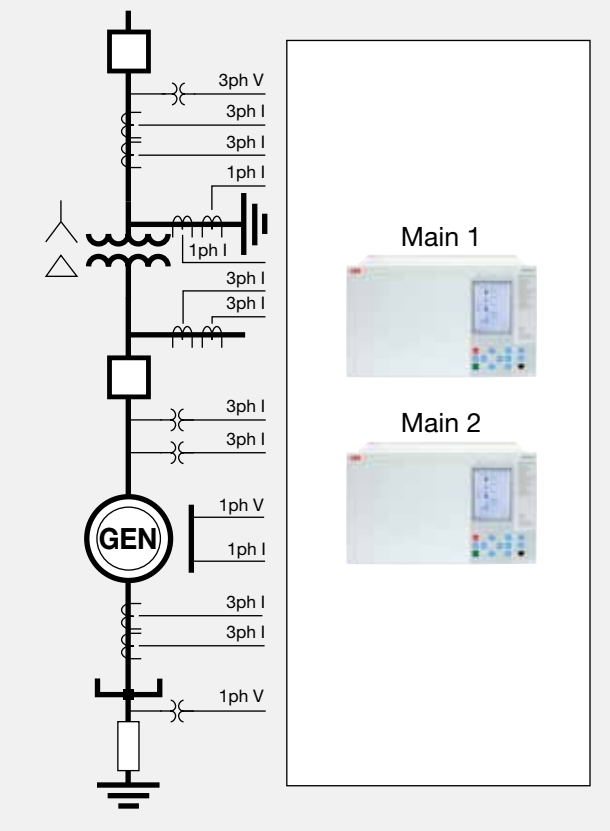


REG670 IED with 24 analog inputs is able to protect the entire generator-transformer unit including generator differential and transformer/overall differential protection. Redundancy is obtained by duplication.

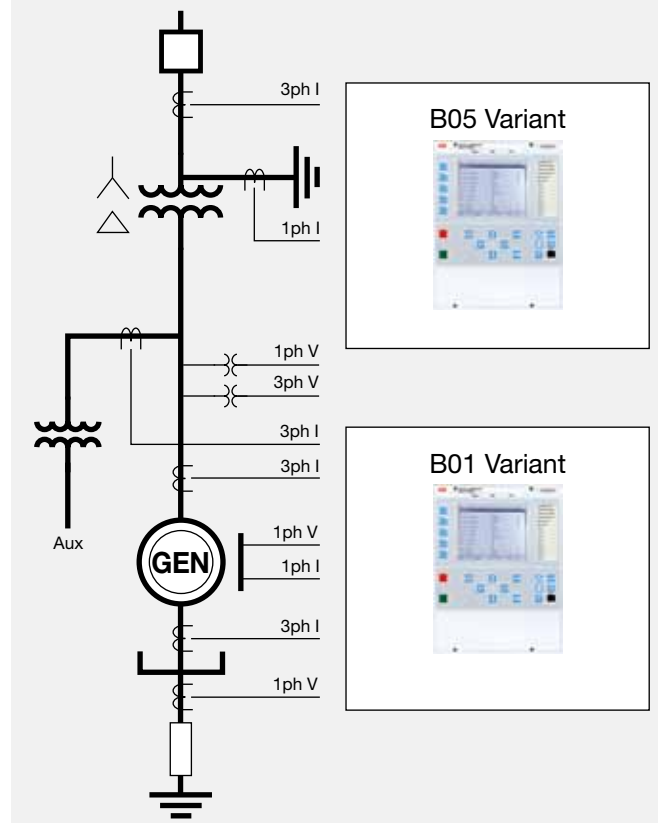


REG650 based protection scheme for medium-sized generator-transformer unit connected to a solidly grounded high voltage system.

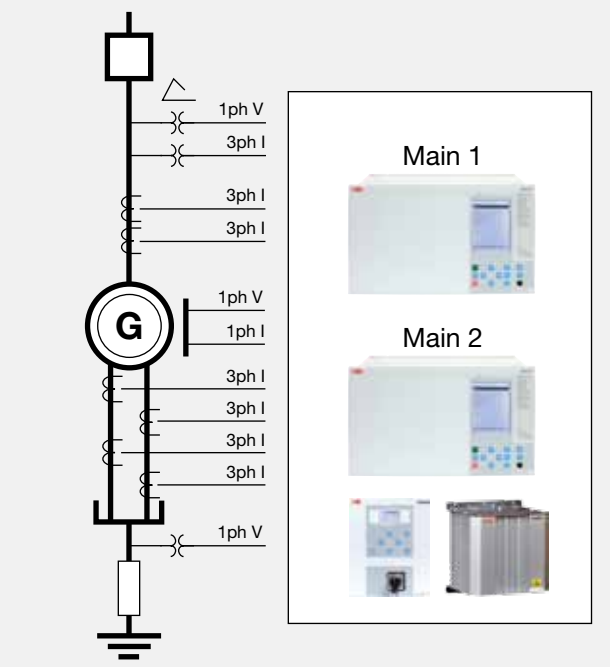


REG670 IED with 24 analog inputs for advanced generator protection including overall differential protection, split-phase differential protection and 100% stator ground-fault protection based on injection principle. Redundancy is obtained by duplication.

# Contact us

**ABB Inc.**
Operations, Engineering and
Sales Support Center
940 Main Campus Drive
Raleigh, NC 27606, USA
Toll Free: 1-800-HELP-365

**ABB México**
Sales Support Center
Paseo de las Américas No. 31
53125, Naucalpan, Edo. De Mexico, Mexico
Tel. +52-55-3601 9500

**www.abb.com/substationautomation**

1MRK 502 039-SUS © Copyright 2010 ABB. All rights reserved. Imageneering 6/2011

Power and productivity
for a better world™