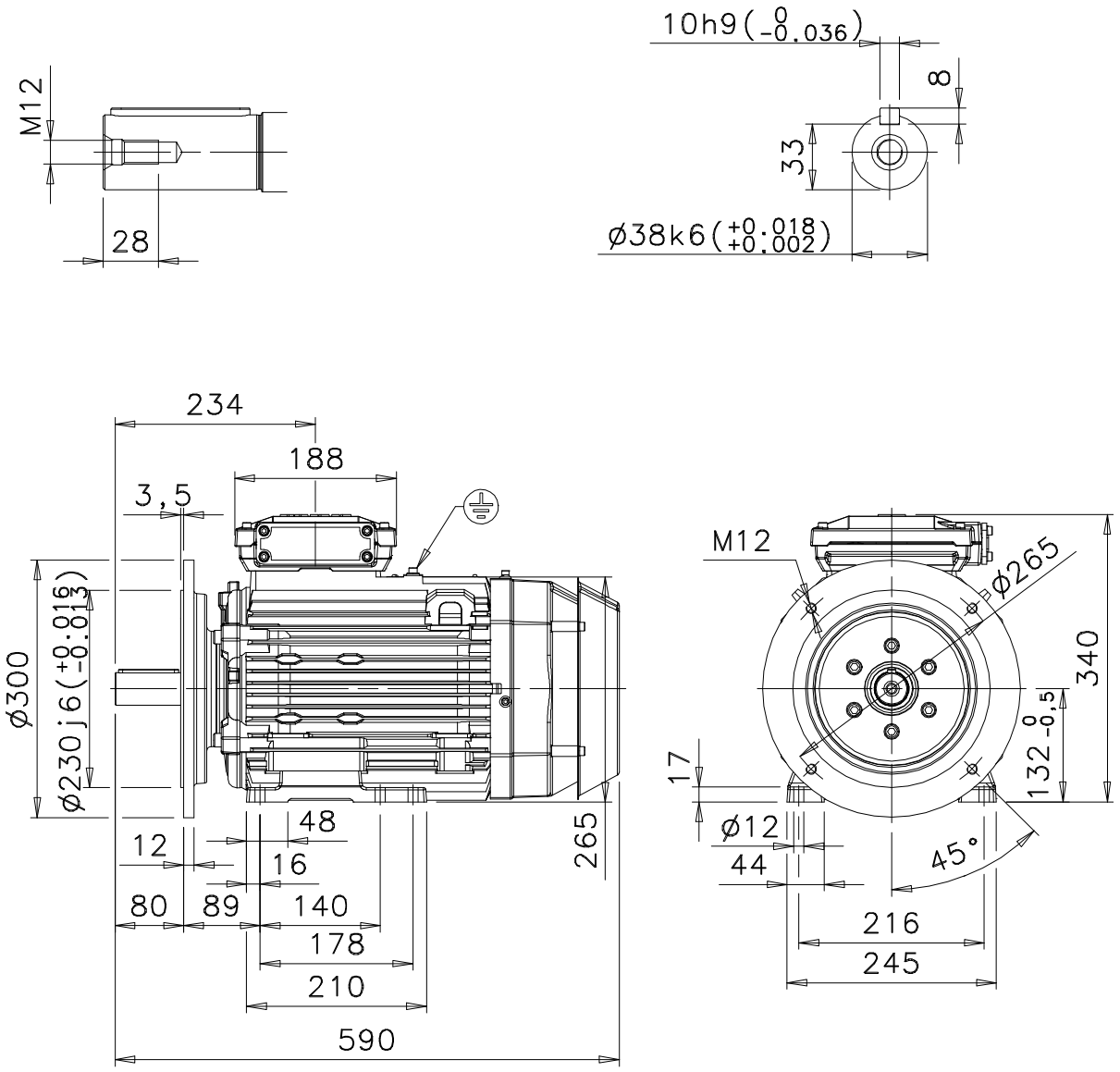

Additional information:

Dimension Print	Motor Type: M3KP/GP/HP 132SM_2-8, V17, FT265	Document No: 3GZF500113-100 A 13 KP 132 A
Description: STANDARD SQUIRREL CAGE MOTOR		

Unit:	ABB Oy, Motors and Generators	Issued by:	R.Ketonen	Replaces:
Date:	04.02.2011	Approved by:	J-P.Kuokkala	Replaced by:

ABB Oy	Customer Reference:	ABB