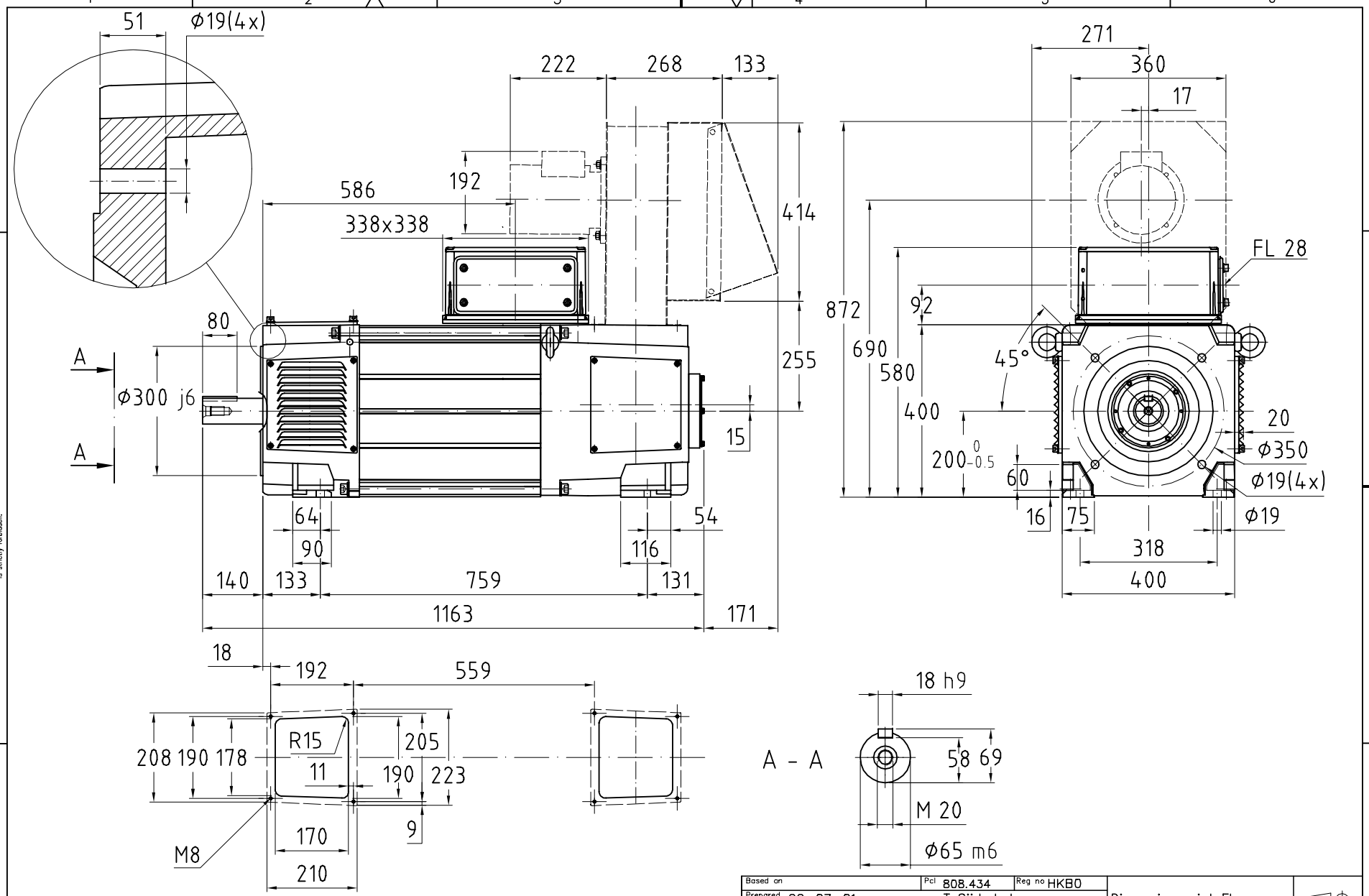

Based on	Pcl 808.434	Reg no HKB0	Dimension print Flange Måttskiss Fläns DMI 200P
Prepared 99-07-01	T Söderholm		
Approved 99-07-01	PER NORDSTROM		
Resp dept MOT/ML	Take over dept		Revision
ABB Motors			3BSM 004585-1

Lang 82
Page 1
Cont

99-07-01 16.21

A3

We reserve all rights in this document and in the information contained therein. Reproduction, use or disclosure to third parties without express authority is strictly forbidden.