UG03-3014E
User's Guide
March 1989

ABB Relays

Data subject to change without notice

Type RXPF 4
Directional ground-fault relay

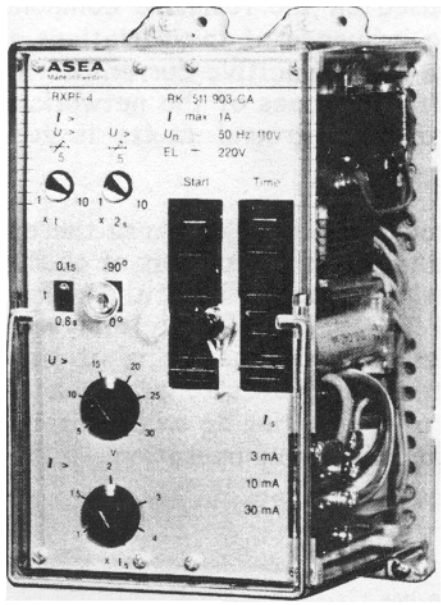

(85 00 14)

General

- Directional ground-fault relay for networks with isolated neutral or networks with resistance-grounded neutral with or without neutral point reactor
- Wide scale range 3-120 mA
- Adjustable release 5-30 V
- Manual or automatic selection of characteristic angle α between 0° and -90°
- Uni- or bidirectional version
- Built back-up protection
- Insensitive to dc component in the fault current
- Separate starting and tripping indicators
- Separate starting and tripping relay
- Extremely low power consumption

Application

The RXPF 4 is used as a directional ground-fault relay in networks with isolated neutral and in networks with resistance-grounded neutral with or without neutral point reactor.

Directional ground-fault relays in networks with isolated neutral are intended to measure the capacitive ground-fault current and therefore they have a characteristic angle α of -90°. Such relays are to be connected for operation for a capacitive ground-fault current in the direction from the point of the fault and towards the busbar. Directional ground-fault relays are to be installed when the contribution, of a sound line to the ground-fault current exceeds 66 % in the case of an overhead line and 33 % in the case of a cable, of the set value of the ground-fault relay.

Directional ground-fault relays, in networks with resistance-grounded neutral with or without neutral point reactor are intended to measure the resistive ground-fault current and they have a characteristic angle α of 0^{0}. Such relays are to be connected for operation for a resistive ground-fault current in the direction from the busbar and out towards the point of the fault.

When a neutral-point resistor is installed and the directional ground-fault relays are based on the resistive component of the ground-fault current is the influence of the variations avoided which arise in the magnitude of the capacitive current during different operating modes and different scopes of the network. The voltage rise in the case of intermittent ground faults is furthermore radically reduced.

In resistance grounded networks where the directional ground-fault relays measure the resistive component of the ground-fault current must the operating characteristic of the relays not pass through origo; refer to Fig. 1 below. The relay may otherwise operate unwanted due to erroneous metering of the current transformers when metering the capacitive current in a sound line. Only directional ground-fault relays having an operating characteristic of $I_N \times \cos \varphi$ can be used for reliable operation.

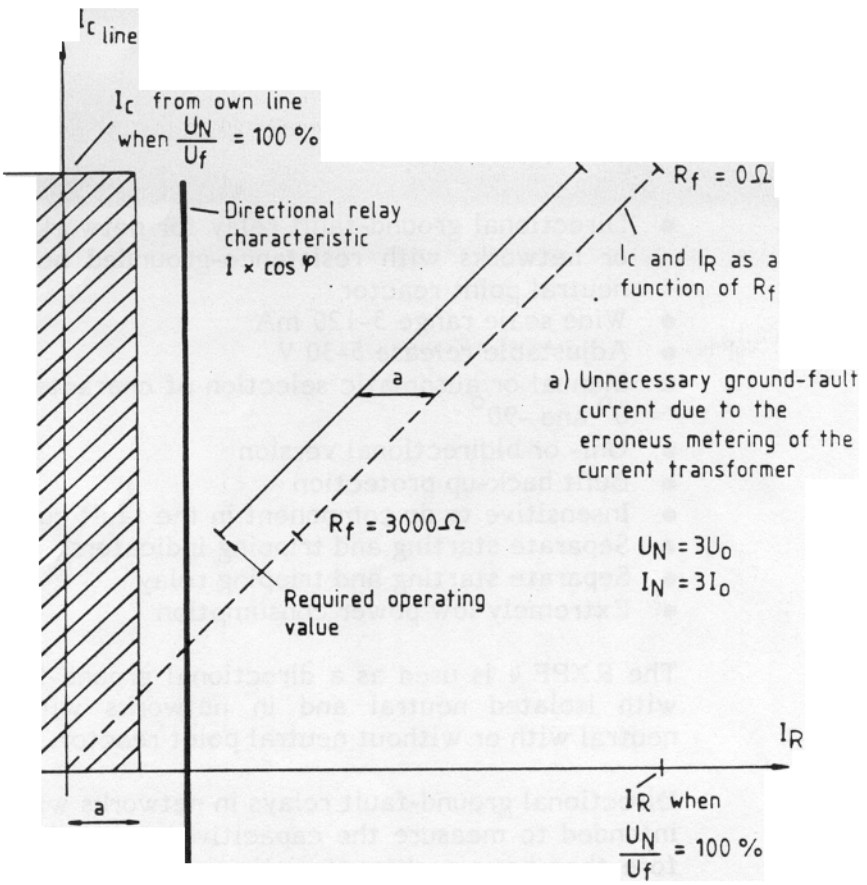

Fig. 1 Operating conditions of a directional ground-fault relay in a resistance grounded network with or without neutral point reactor.

RXPF 4 with scale range adjustable between 3 and 120 mA measures $I_N \times \cos (\varphi - \alpha)$.

The extremely low power consumption of the current circuit enables the detection of low ground-fault currents irrespective of the neutral-point grounding principle of the network. The requirements specified e.g. in high voltage directives in Sweden regarding the disconnection of ground faults in installations incorporating overhead lines, at a fault resistance of 3000 ohms at the point of the fault can therefore be fulfilled with adequate margin. Refer to table 1 below relating to primary operating currents when cable current transformers are used.

The extremely low power consumption and the wide scale range of 3-120 mA make it a simple matter to adapt the relay setting to other types of cable current transformer or to summated-current connected phase-current transformfers. In all cases it must always be assured that the efficiency is greater than 90 %.

Table 1

Relay and current scale	Relay setting	Cable current transformer	Primary operating current	Efficiency
RXPF 4	3 mA	ILKB 05 200/1	620 mA	0.97
		IHKA 05 100/1	348 mA	0.86
	12 mA	ILKB 05 200/1	2450 mA	0.975
		IHKA 05 100/1	1290 mA	0.93
	10 mA	ILKB 05 200/1	2030 mA	0.985
		IHKA 05 100/1	1020 mA	0.98
	40 mA	ILKB 05 200/1	8060 mA	0.99
		IHKA 05 100/1	4080 mA	0.98
	30 mA	ILKB 05 200/1	6060 mA	0.99
		IHKA 05 100/1	3030 mA	0.99
	120 mA	ILKB 05 200/1	24000 mA	1.0
		IHKA 05 100/1	12000 mA	1.0

In table 1 have current transformers with bad magnetizing characteristic been selected. This implies better efficiency in normal cases.

A network with isolated neutral point or with resistance grounded neutral point, with or without neutral point reactor, normally has a displacement of the neutral point. When overhead networks run parallel with transmission lines the displacement of the neutral point can create a voltage up to 6 % of the nominal voltage. To ensure that the displacement of neutral point does not influence the operation of the directional relay. The RXPF 4 is furnished with a voltage release that is adjustable between 5 and 30 V from the front of the relay.

For the starting function, the RXPF 4 therefore requires that both $I_N \times \cos(\varphi - \alpha)$ and U_N exceed the set value. The starting function is indicated with a yellow target on the front of the relay and by a relay incorporating 2 N/O contacts for the propose of e.g. events recording.

For the tripping function the RXPF 4 requires that I_N x cos (φ - α) and U_N exceed the set values and that a definite time lag has expired. The definite time lag is adjustable between 0.1 and 8 s from the front of the relay. When tripping occurs a trip relay picks up. This relay has 3 N/O contacts for tripping alarm and event recording. Tripping is indicated by a red target on the front of RXPF 4.

The RXPF 4 is also provided with a built-in backup protection in case the ground fault current does not reach the set value. This neutral-point voltage protection is based upon the above-mentioned voltage release and on definite time lag which is adjustable between 2 and 20 s from the front of the relay. The network can, for example, be selectively divided in the event of a highly resistive ground fault in order to facilitate fault tracing. On operation the above-mentioned relay picks up and shows a red target on its front.

The alternative indications will be:

Tripping of directional ground-fault relay

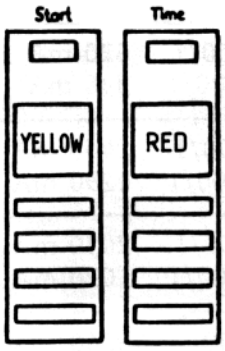

Tripping of neutral-point voltage relay

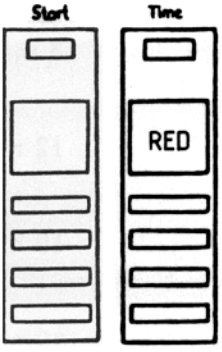

The RXPF 4 has the characteristic angle α which is adjustable between 0° (for resistance grounded networks) and -90° (for isolated networks). Adjustments can be made on the front of the relay or through the control inputs 127-128. Adjustments between 0° and -90° can thus be made externally via remote control or auxiliary contact in, for example, the switch-disconnector which connects the neutral point equipment.

The RXPF 4 is available in a version with bidirectional function for the resistive component of the ground-fault current. The bi-directional version "looks" both forwards and backwards and operates otherwise identically to the unidirectional version. In radial networks a directional test is therefore unnecessary and commissioning is simplified.

In the event of a ground fault in a pure cable network the high-voltage directives may permit the issue of an alarm only. However the power utilities has observed that an alarm only, for ground faults in modern 3-phase cables can seldom be utilized in practice. The fact is that the ground fault as a rule rapidly develops into a short circuit. It is therefore necessary to disconnect the cable immediately even in the case of ground faults.

In extensive resistance-grounded or reactance-grounded cable networks the ground-fault current will hot in the initial stages of the fault sequence be sinusoidal. The ground-fault current will contain a high frequency current which has a superimposed dc component. Following this, the ground fault current changes to current pulses which in certain cases can be almost only positive or negative. This direct current rapidly generates a flux which causes the saturation of the input transformer in the ground-fault relay. Consequently, in such networks, it is inadequate to provide the ground-fault relays with filters for the third harmonic only. The input transformers of the ground-fault relays must also have an airgap which can damp the direct-current saturation and thus reduce the angular error.

The RXPF 4 is provided with both a filter for the third harmonic and an airgap in the input transformer. The RXPF 4 can therefore be used in extensive cable networks.

Design

The RXPF 4 is designed as a relay unit of COMBIFLEX type. It occupies four relay seats (modular dimension 4S 12C). The relay consists primarily of a current transformer with a reconnectible primary, a voltage transformer, two output relays and two p.c. boards which incorporate setting devices and circuits for signal processing, level measurements, delays and amplification.

The setting devices, with four potentiometers and two selector switches, are accessible from the front. The output relays are intended for the starting and time-lag functions. They have two normally open contacts and a yellow indicating flag respectively three normally open contacts and a red indicating flag. The relay cover is furnished with a knob for the manual resetting of the indicating flags.

Mode of operation

From a functional point of view, the RXPF 4 is built up according to the block diagram shown in Fig. 2.

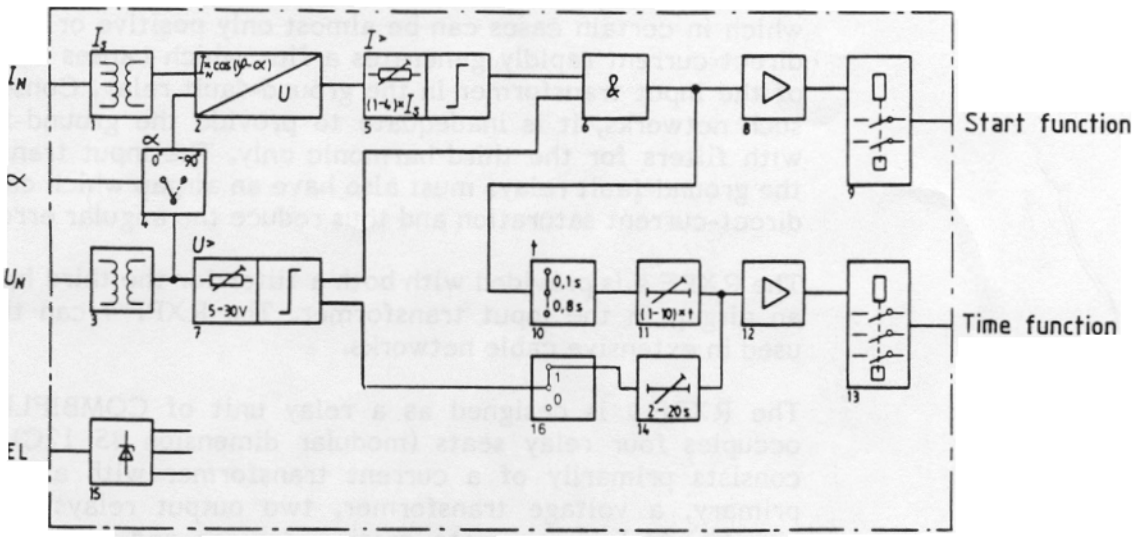

Fig. 2 Blockdiagram of RXPF 4

1. Current transformer with reconnectible primary, I_s=3, 10 and 30 mA
2. Transducer
3. Voltage transformer
4. Phase rotating circuit with switch for selecting the characteristic angle α
5. Level flipflop with setting I > = (1-4)xI_s
6. AND circuit
7. Level flipflop with setting U > = 5-30 V
8,12 Amplifiers
9,13 Output relays
10. Selector switch for choosing scale constant t
11,14 Timing circuits
15. Stabilizing circuit for the auxiliary supply
16. Selector switch for back-up protection

The ground-fault current I_N is stepped down in the current transformer (1), which has a reconnectible primary, and is routed to transducer (2). The transformer has an airgap to prevent its saturation by ground currents which contain direct current. The neutral-point voltage U_N is stepped down in voltage transformer (3) and is applied, via a phase rotating circuit (4) containing a switch for selecting the characteristic angle α, to the transducer.

The transducer supplies a dc voltage that is proportional to I_N x cos (φ - α). This voltage is applied to a level detector (5) which is adjustable between 1 to 4 times the scale constant I_s. An output voltage is applied to an AND-circuit (6) when I_N x cos (φ - α) is greater than the set value I >. To the AND-circuit is also connected a level detector (7) in the voltage circuit which is adjustable between 5 and 30 V. The detector provides an output voltage when U_N is greater than the set value U >.

When the two inputs of the AND-circuit are energized, a signal is obtained and amplified (8) and supplies output relay (9), whereupon the starting function is commenced. Via switch (10), which is used for selecting scale constant t, the signal also starts a timing circuit (11). After expiration of the set time, the signal is amplified (12) and supplies output relay (13), whereupon the timing function is obtained.

The timing function is also obtained if the neutral-point voltage U_N exceeds the set value U > for a time longer than the set time-lag on timing circuit (14).

The auxiliary voltage EL is stabilized (15) with regulating diodes whereby the functions are not influenced by variations in the voltage and the circuits are protected against transients.

Settings and indications

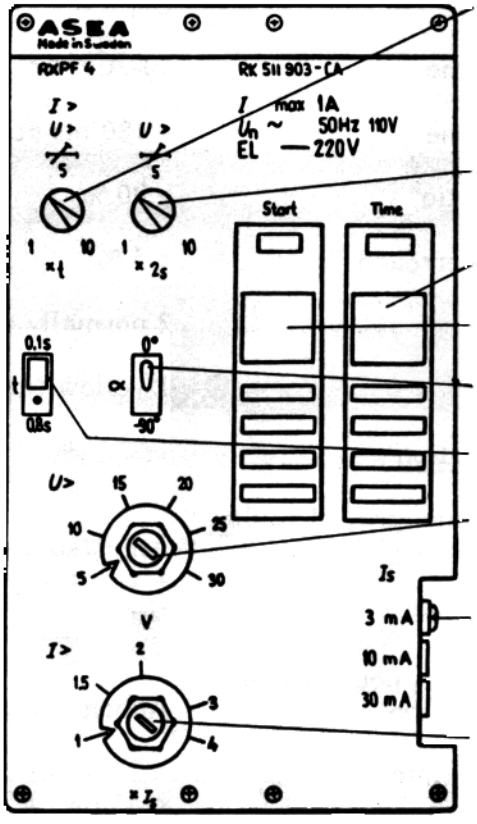

Setting of the delay of the time function at ground current operation. Setting range (1-10) x t where t is the selected scale constant referred to below.

Setting of the delay of the time function at neutral-point voltage operation. Setting range 2 to 20 s.

Indicator red flag for time function.

Indicator yellow flag for starting function.

Setting of the characteristic angle ; 0° or -90°.

Setting of the scale constant t; 0.1 or 0.8 s.

Setting of U > for voltage release and neutral-point voltage operation. Setting range 5 to 30 V.

Selection of scale constant I_s. The relay must be removed from its terminal base when the constant is reselected.

Setting of I > for the starting function.
Setting range (1-4) x I_s.

The characteristic angle α of the relay is set by means of a toggle switch, in the front of the relay with a small screwdriver through a hole in the plastics cover of the relay. Normally the hole is sealed with a plastics plug. The characteristic angle α can also be switch from 0° to -90° through terminals 127 and 128, the selector switch α on the front of the relay must then be in the 0° position. Other settings and reconnections can be made after removing the plastics cover of the relay.

The indicating flags are reset by means of a knob in the front of the plastics cover.

Technical data

Rated voltage U_n	110 V
Rated frequency	50 or 60 Hz
Scale constant I_s	Reconnectible for 3, 10 or 30 mA
Charaxteristic angle	Reconnectible for 0 or -90°
Auxiliary voltage EL	48-55, 110-125, 220 or 250 V dc
Starting function	
Operating value I >	Adjustable (1-4) x I_s
Release voltage U >	Adjustable between 5 and 30 V
Operation	When I_N x cos $(\varphi - \alpha) > I >$ and $U_N > U >$
Operating time	50-70 ms at 2 x I >
Returning time	< 180 ms at 10 x I >
Returning ratio	> 90 %
Transient overreach	< 5 %
Contacts	2 normally open
Indicator	1 yellow flag
Delayed function	
Operating time, ground-fault operation	Adjustable (1-10) x 0.1 and x 0.8 s + operating time of starting function
Operating time, neutral-point voltage operation	Adjustable 2-20 s when $U_N > U >$
Retardation time	< 75 ms at 3 x I > < 50 ms at 3 x U >
Returning time	< 160 ms at 10 x I > < 120 ms at 10 x U >
Returning ratio	> 90 %
Contacts	3 normally open
Indicator	1 red flag

Miscellaneous

Overload capacity	
Current circuit	1 A continuously 20 A for 1 s
Voltage circuit	140 V continuously
Power consumption	
Current circuit	0,015 mVA when $I_N = I_S = 3$ mA 0,020 mVA when $I_N = I_S = 10$ mA 0,050 mVA when $I_N = I_S = 30$ mA
Voltage circuit	1 VA when $U_N = U_n$
Auxiliary voltage	< 4 W before operation < 6 W before operation
Permissible ambient temperature	-25 to +55°C
Permissible variation in EL	-20 to +10 % of rated value
Permissible pulsation in EL	± 6 % of rated value
Dielectric strength	
Current circuit	2500 V, 50 Hz, 1 min
Voltage circuit	2000 V, 50 Hz, 1 min

		-input [1]
Impulse withstand test voltage	Class PL 4 [2] 5 kV, 1.2/50 µs, 0.5 J	Class PL 2 [2] 1 kV, 1.2/50 µs,0.02J
Disturbance test voltage	Class PL 4	Class PL 2
Network frequency test	500 V, 2 min	10-100 V, 2 min
1 MHz test	2.5 kV, 2 s	0.5 kV, 2 s
Spark test	4-8 kV, 2 min	1-2 kV, 2 min

Interruption of aux. supply	As per SS 436 15 03 Operation terminated during interruptions > 20 ms
Dimensions	4S 12C
Mass	1,4 kg
Contact data	
System voltage	300/250 V dc/ac
Current carrying capacity	5 A
Making and conducting capacity	30 A for 200 ms
Breaking capacity	
ac, P.F. > 0,4	10 A
dc, L/R < 40 ms	1,5 A at 48 V 0,4 A at 110 V 0,2 A at 220 V

1) Input for changing of characteristic angle α from 0° to -90°
2) As per SS 436 15 03

Installation

The RXPF 4 is a plug-in type relay of size 4S 12C. S and C are modular units where the height S=44.45 mm and the width C=7 mm. The relay is plugged into a RX 4 type terminal base which can be mounted in an equipment frame, in a case or on a panel.

The RXPF 4 and the RX 4 terminal base are included in ABB's COMBIFLEX modular system which is described in catalog B03-9301E. When inserting or removing relays or other units in or from a protective relay, and when making reconnections etc., great care must be exercised in order to prevent unauthorized operations. In such cases, the protective relay should be isolated, while when adjusting the relays it is sufficient to block the trip circuit by means of a RTXB-type blocking pin which is inserted in a RTXP 18 test switch (B03-9510E).

The relay is supplied together with short-circuiting device RTXK, which is to be screwed in the current terminals (131-141) on the rear of the terminal base. When the relay is removed, the RTXK will short-circuit the current circuit from the current transformer.

Connections

The terminals for RXPF 4 are shown on the terminal diagram in Fig. 3.

The relay operates when the current and voltage are directed as shown by the arrows.

The relay is connected to the current and voltage transformers as shown in Fig. 4. The figure shows two methods for obtaining zero sequency current and zero sequency voltage.

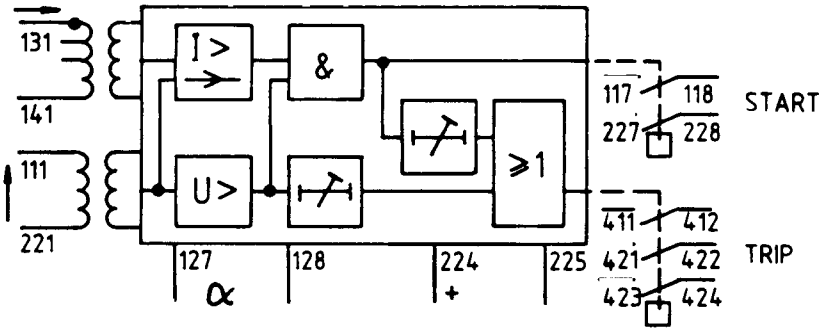

Fig. 3 Terminal diagram of RXPF 4

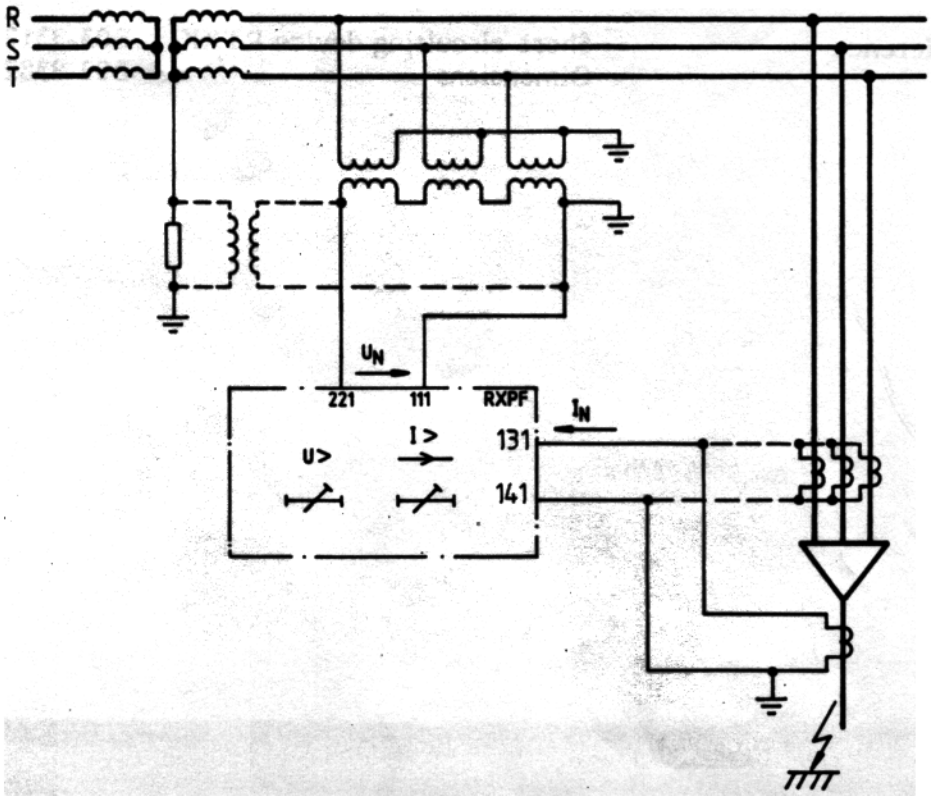

Fig. 4 Connections of RXPF 4 in a directional ground-fault relay

Care

The relay requires no maintenance under normal conditions. The cover must be fixed securely in position. Under normal operating conditions, it is recommended to routine test the relay every second year.

Burned contacts on the output relays should be carefully dressed with a diamond file or a very fine-cut file. Emery cloth or the like should not be used since isolated grains of emery can fasten on the contact sufaces and cause interruptions.

Ordering

State:

- Type RXPF 4
- Quantity
- Ordering no. as given in the table below

Rated frequency	Version	Aux. voltage EL V dc 48-55	110-125	220	250
50 Hz	unidirectional RK 511 903-	-AA	-BA	-CA	-DA
	bidirectional RK 511 905-	-AA	-BA	-CA	-DA
60 Hz	undirectional RK 511 904-	-AA	-BA	-CA	-DA
	bidirectional RK 511 906-	-AA	-BA	-CA	-DA

Reference	Short-circuiting device RTXK	B03-9312E
	Dimensions	B03-9382E

ABB Relays

ABB Relays AB, S-721 71 Västerås, Sweden, Tel. + 46 21 32 13 00
Telefax + 46 21 14 69 18, Telex 408 36 abbrly s