Relion® 670 series

Bay control REC670 2.0 ANSI
Application manual

Power and productivity
for a better world™

Document ID: 1MRK 511 310-UUS
Issued: May 2014
Revision: A
Product version: 2.0

© Copyright 2014 ABB. All rights reserved

Copyright

This document and parts thereof must not be reproduced or copied without written permission from ABB, and the contents thereof must not be imparted to a third party, nor used for any unauthorized purpose.

The software and hardware described in this document is furnished under a license and may be used or disclosed only in accordance with the terms of such license.

This product includes software developed by the OpenSSL Project for use in the OpenSSL Toolkit. (http://www.openssl.org/)

This product includes cryptographic software written/developed by: Eric Young (eay@cryptsoft.com) and Tim Hudson (tjh@cryptsoft.com).

Trademarks

ABB and Relion are registered trademarks of the ABB Group. All other brand or product names mentioned in this document may be trademarks or registered trademarks of their respective holders.

Warranty

Please inquire about the terms of warranty from your nearest ABB representative.

Disclaimer

The data, examples and diagrams in this manual are included solely for the concept or product description and are not to be deemed as a statement of guaranteed properties. All persons responsible for applying the equipment addressed in this manual must satisfy themselves that each intended application is suitable and acceptable, including that any applicable safety or other operational requirements are complied with. In particular, any risks in applications where a system failure and/or product failure would create a risk for harm to property or persons (including but not limited to personal injuries or death) shall be the sole responsibility of the person or entity applying the equipment, and those so responsible are hereby requested to ensure that all measures are taken to exclude or mitigate such risks.

This document has been carefully checked by ABB but deviations cannot be completely ruled out. In case any errors are detected, the reader is kindly requested to notify the manufacturer. Other than under explicit contractual commitments, in no event shall ABB be responsible or liable for any loss or damage resulting from the use of this manual or the application of the equipment.

Conformity

This product complies with the directive of the Council of the European Communities on the approximation of the laws of the Member States relating to electromagnetic compatibility (EMC Directive 2004/108/EC) and concerning electrical equipment for use within specified voltage limits (Low-voltage directive 2006/95/EC). This conformity is the result of tests conducted by ABB in accordance with the product standard EN 60255-26 for the EMC directive, and with the product standards EN 60255-1 and EN 60255-27 for the low voltage directive. The product is designed in accordance with the international standards of the IEC 60255 series.

Table of contents

Section 1 Introduction

1.1 This manual

The application manual contains application descriptions and setting guidelines sorted per function. The manual can be used to find out when and for what purpose a typical protection function can be used. The manual can also provide assistance for calculating settings.

1.2 Intended audience

This manual addresses the protection and control engineer responsible for planning, pre-engineering and engineering.

The protection and control engineer must be experienced in electrical power engineering and have knowledge of related technology, such as protection schemes and communication principles.

1.3 Product documentation

1.3.1 Product documentation set

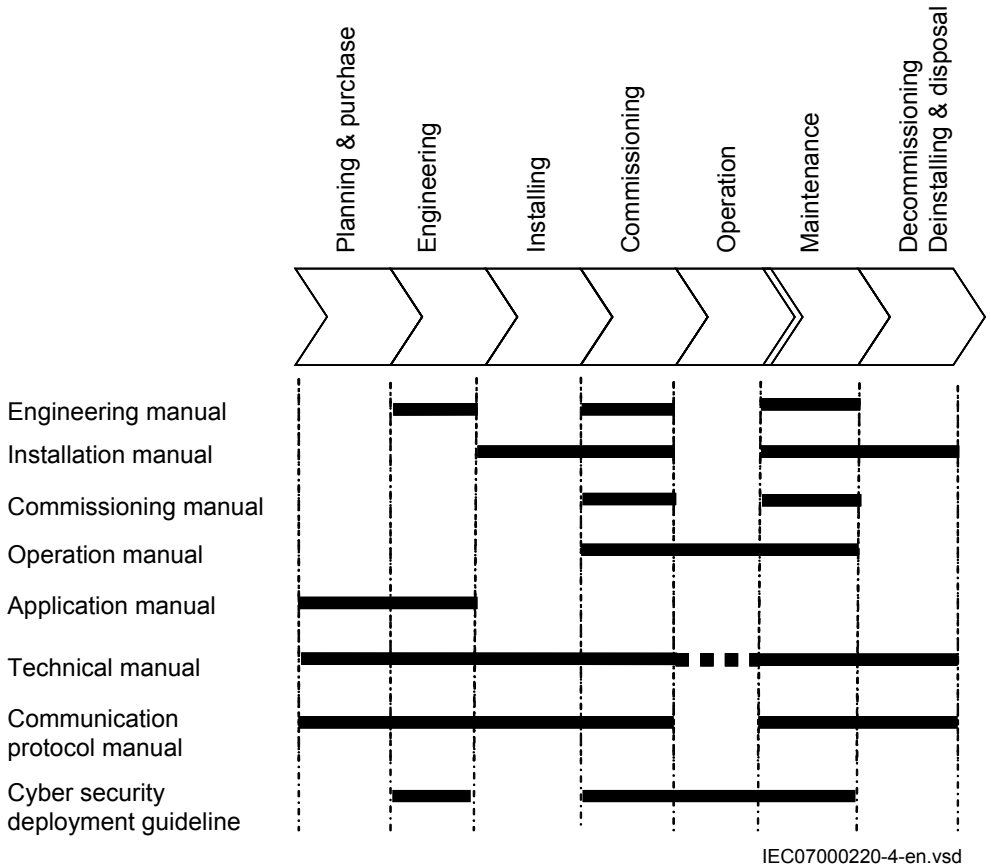

Figure 1: The intended use of manuals throughout the product lifecycle

The engineering manual contains instructions on how to engineer the IEDs using the various tools available within the PCM600 software. The manual provides instructions on how to set up a PCM600 project and insert IEDs to the project structure. The manual also recommends a sequence for the engineering of protection and control functions, LHMI functions as well as communication engineering for IEC 60870-5-103, IEC 61850 and DNP3.

The installation manual contains instructions on how to install the IED. The manual provides procedures for mechanical and electrical installation. The chapters are organized in the chronological order in which the IED should be installed.

The commissioning manual contains instructions on how to commission the IED. The manual can also be used by system engineers and maintenance personnel for assistance during the testing phase. The manual provides procedures for the checking of external circuitry and energizing the IED, parameter setting and configuration as well as verifying settings by secondary injection. The manual describes the process of testing an IED in a substation which is not in service. The chapters are organized in the chronological order in which the IED should be commissioned. The relevant procedures may be followed also during the service and maintenance activities.

The operation manual contains instructions on how to operate the IED once it has been commissioned. The manual provides instructions for the monitoring, controlling and setting of the IED. The manual also describes how to identify disturbances and how to view calculated and measured power grid data to determine the cause of a fault.

The application manual contains application descriptions and setting guidelines sorted per function. The manual can be used to find out when and for what purpose a typical protection function can be used. The manual can also provide assistance for calculating settings.

The technical manual contains application and functionality descriptions and lists function blocks, logic diagrams, input and output signals, setting parameters and technical data, sorted per function. The manual can be used as a technical reference during the engineering phase, installation and commissioning phase, and during normal service.

The communication protocol manual describes the communication protocols supported by the IED. The manual concentrates on the vendor-specific implementations.

The point list manual describes the outlook and properties of the data points specific to the IED. The manual should be used in conjunction with the corresponding communication protocol manual.

The cyber security deployment guideline describes the process for handling cyber security when communicating with the IED. Certification, Authorization with role based access control, and product engineering for cyber security related events are described and sorted by function. The guideline can be used as a technical reference during the engineering phase, installation and commissioning phase, and during normal service.

1.3.2 Document revision history

Document revision/date	History
-/October 2014	First release

1.3.3 Related documents

Documents related to REC670	Identify number
Application manual	1MRK 511 310-UUS
Commissioning manual	1MRK 511 312-UUS
Product guide	1MRK 511 313-BUS
Technical manual	1MRK 511 311-UUS
Type test certificate	1MRK 511 313-TUS

670 series manuals	Identify number
Operation manual	1MRK 500 118-UUS
Engineering manual	1MRK 511 308-UUS
Installation manual	1MRK 514 019-UUS
Communication protocol manual, DNP3	1MRK 511 301-UUS
Communication protocol manual, IEC 61850 Edition 2	1MRK 511 303-UUS
Accessories guide	1MRK 514 012-BUS
Connection and Installation components	1MRK 513 003-BEN
Test system, COMBITEST	1MRK 512 001-BEN

1.4 Document symbols and conventions

1.4.1 Symbols

The electrical warning icon indicates the presence of a hazard which could result in electrical shock.

The warning icon indicates the presence of a hazard which could result in personal injury.

The caution hot surface icon indicates important information or warning about the temperature of product surfaces.

The caution icon indicates important information or warning related to the concept discussed in the text. It might indicate the presence of a hazard which could result in corruption of software or damage to equipment or property.

The information icon alerts the reader of important facts and conditions.

The tip icon indicates advice on, for example, how to design your project or how to use a certain function.

Although warning hazards are related to personal injury, it is necessary to understand that under certain operational conditions, operation of damaged equipment may result in degraded process performance leading to personal injury or death. It is important that the user fully complies with all warning and cautionary notices.

1.4.2 Document conventions

- Abbreviations and acronyms in this manual are spelled out in the glossary. The glossary also contains definitions of important terms.
- Push button navigation in the LHMI menu structure is presented by using the push button icons.
  For example, to navigate between the options, use ↑ and ↓.
- HMI menu paths are presented in bold.
  For example, select **Main menu/Settings**.
- LHMI messages are shown in Courier font.
  For example, to save the changes in non-volatile memory, select `Yes` and press ↵.
- Parameter names are shown in italics.
  For example, the function can be enabled and disabled with the *Operation* setting.
- Each function block symbol shows the available input/output signal.
  - the character ^ in front of an input/output signal name indicates that the signal name may be customized using the PCM600 software.
  - the character * after an input/output signal name indicates that the signal must be connected to another function block in the application configuration to achieve a valid application configuration.
- Logic diagrams describe the signal logic inside the function block and are bordered by dashed lines.

- Signals in frames with a shaded area on their right hand side represent setting parameter signals that are only settable via the PST or LHMI.
- If an internal signal path cannot be drawn with a continuous line, the suffix -int is added to the signal name to indicate where the signal starts and continues.
- Signal paths that extend beyond the logic diagram and continue in another diagram have the suffix ”-cont.”

- Dimensions are provided both in inches and mm. If it is not specifically mentioned then the dimension is in mm.

1.4.3 IEC61850 edition 1 / edition 2 mapping

Table 1: IEC61850 edition 1 / edition 2 mapping

Function block name	Edition 1 logical nodes	Edition 2 logical nodes
AEGPVOC	AEGGAPC	AEGPVOC
AGSAL	SECLLN0 AGSAL	AGSAL
ALMCALH		ALMCALH
ALTIM		ALTIM
ALTMS		ALTMS
ALTRK		ALTRK
BCZSPDIF	BCZSPDIF	BCZSPDIF
BCZTPDIF	BCZTPDIF	BCZTPDIF
BDCGAPC	SWSGGIO	BDCGAPC
BRCPTOC	BRCPTOC	BRCPTOC
BTIGAPC	B16IFCVI	BTIGAPC
BUSPTRC_B1	BBSPLLN0 BUSPTRC	LLN0 BUSPTRC
BUSPTRC_B2	BUSPTRC	BUSPTRC
BUSPTRC_B3	BUSPTRC	BUSPTRC
BUSPTRC_B4	BUSPTRC	BUSPTRC
BUSPTRC_B5	BUSPTRC	BUSPTRC
BUSPTRC_B6	BUSPTRC	BUSPTRC
BUSPTRC_B7	BUSPTRC	BUSPTRC
BUSPTRC_B8	BUSPTRC	BUSPTRC
BUSPTRC_B9	BUSPTRC	BUSPTRC
BUSPTRC_B10	BUSPTRC	BUSPTRC
BUSPTRC_B11	BUSPTRC	BUSPTRC
BUSPTRC_B12	BUSPTRC	BUSPTRC
Table continues on next page		

Function block name	Edition 1 logical nodes	Edition 2 logical nodes
BUSPTRC_B13	BUSPTRC	BUSPTRC
BUSPTRC_B14	BUSPTRC	BUSPTRC
BUSPTRC_B15	BUSPTRC	BUSPTRC
BUSPTRC_B16	BUSPTRC	BUSPTRC
BUSPTRC_B17	BUSPTRC	BUSPTRC
BUSPTRC_B18	BUSPTRC	BUSPTRC
BUSPTRC_B19	BUSPTRC	BUSPTRC
BUSPTRC_B20	BUSPTRC	BUSPTRC
BUSPTRC_B21	BUSPTRC	BUSPTRC
BUSPTRC_B22	BUSPTRC	BUSPTRC
BUSPTRC_B23	BUSPTRC	BUSPTRC
BUSPTRC_B24	BUSPTRC	BUSPTRC
BUTPTRC_B1	BBTPLLN0 BUTPTRC	LLN0 BUTPTRC
BUTPTRC_B2	BUTPTRC	BUTPTRC
BUTPTRC_B3	BUTPTRC	BUTPTRC
BUTPTRC_B4	BUTPTRC	BUTPTRC
BUTPTRC_B5	BUTPTRC	BUTPTRC
BUTPTRC_B6	BUTPTRC	BUTPTRC
BUTPTRC_B7	BUTPTRC	BUTPTRC
BUTPTRC_B8	BUTPTRC	BUTPTRC
BZNSPDIF_A	BZNSPDIF	BZNSGAPC BZNSPDIF
BZNSPDIF_B	BZNSPDIF	BZNSGAPC BZNSPDIF
BZNTPDIF_A	BZNTPDIF	BZNTGAPC BZNTPDIF
BZNTPDIF_B	BZNTPDIF	BZNTGAPC BZNTPDIF
CBPGAPC	CBPLLN0 CBPMMXU CBPPTRC HOLPTOV HPH1PTOV PH3PTOC PH3PTUC RP3PDOP	LLN0 CBPPTRC HOLPTOV HPH1PTOV PH3PTOC PH3PTUC RP3PDOP
CCPDSC	CCRPLD	CCPDSC
CCRBRF	CCRBRF	CCRBRF
CCSRBRF	CCSRBRF	CCSRBRF
CCSSPVC	CCSRDIF	CCSSPVC
Table continues on next page		

Function block name	Edition 1 logical nodes	Edition 2 logical nodes
CMMXU	CMMXU	CMMXU
CMSQI	CMSQI	CMSQI
COUVGAPC	COUVLLN0 COUVPTOV COUVPTUV	LLN0 COUVPTOV COUVPTUV
CVGAPC	GF2LLN0 GF2MMXN GF2PHAR GF2PTOV GF2PTUC GF2PTUV GF2PVOC PH1PTRC	LLN0 GF2MMXN GF2PHAR GF2PTOV GF2PTUC GF2PTUV GF2PVOC PH1PTRC
CVMMXN	CVMMXN	CVMMXN
DPGAPC	DPGGIO	DPGAPC
DRPRDRE	DRPRDRE	DRPRDRE
ECPSCH	ECPSCH	ECPSCH
ECRWPSCH	ECRWPSCH	ECRWPSCH
EF4PTOC	EF4LLN0 EF4PTRC EF4RDIR GEN4PHAR PH1PTOC	LLN0 EF4PTRC EF4RDIR GEN4PHAR PH1PTOC
EFPIOC	EFPIOC	EFPIOC
ETPMMTR	ETPMMTR	ETPMMTR
FDPSPDIS	FDPSPDIS	FDPSPDIS
FMPSPDIS	FMPSPDIS	FMPSPDIS
FRPSPDIS	FPSRPDIS	FPSRPDIS
FTAQFVR	FTAQFVR	FTAQFVR
FUFSPVC	SDDRFUF	FUFSPVC
GENPDIF	GENPDIF	LLN0 GENGAPC GENPDIF GENPHAR GENPTRC
GOPPDOP	GOPPDOP	LLN0 GOPPDOP PH1PTRC
GRPTTR	GRPTTR	LLN0 GRPTTR GRPTUC
GSPTTR	GSPTTR	GSPTTR
GUPPDUP	GUPPDUP	LLN0 GUPPDUP PH1PTRC
Table continues on next page		

Function block name	Edition 1 logical nodes	Edition 2 logical nodes
HZPDIF	HZPDIF	HZPDIF
INDCALCH		INDCALH
ITBGAPC	IB16FCVB	ITBGAPC
L3CPDIF	L3CPDIF	LLN0 L3CGAPC L3CPDIF L3CPHAR L3CPTRC
L4UFCNT	L4UFCNT	L4UFCNT
L6CPDIF	L6CPDIF	LLN0 L6CGAPC L6CPDIF L6CPHAR L6CPTRC
LAPPGAPC	LAPPLLN0 LAPPPDUP LAPPPUPF	LLN0 LAPPPDUP LAPPPUPF
LCCRPTRC	LCCRPTRC	LCCRPTRC
LCNSPTOC	LCNSPTOC	LCNSPTOC
LCNSPTOV	LCNSPTOV	LCNSPTOV
LCP3PTOC	LCP3PTOC	LCP3PTOC
LCP3PTUC	LCP3PTUC	LCP3PTUC
LCPTTR	LCPTTR	LCPTTR
LCZSPTOC	LCZSPTOC	LCZSPTOC
LCZSPTOV	LCZSPTOV	LCZSPTOV
LD0LLN0	LLN0	LLN0
LDLPSCH	LDLPDIF	LDLPSCH
LDRGFC	STSGGIO	LDRGFC
LEXPDIS	LEXPDIS	LLN0 LEXPDIS LEXPTRC
LFPTTR	LFPTTR	LFPTTR
LMBRFLO	LMBRFLO	LMBRFLO
LOVPTUV	LOVPTUV	LOVPTUV
LPHD	LPHD	LPHD
LT3CPDIF	LT3CPDIF	LLN0 LT3CGAPC LT3CPDIF LT3CPHAR LT3CPTRC
Table continues on next page		

Function block name	Edition 1 logical nodes	Edition 2 logical nodes
LT6CPDIF	LT6CPDIF	LLN0 LT6CGAPC LT6CPDIF LT6CPHAR LT6CPTRC
MVGAPC	MVGGIO	MVGAPC
NS2PTOC	NS2LLN0 NS2PTOC NS2PTRC	LLN0 NS2PTOC NS2PTRC
NS4PTOC	EF4LLN0 EF4PTRC EF4RDIR GEN4PHAR PH1PTOC	LLN0 EF4PTRC EF4RDIR PH1PTOC
OC4PTOC	OC4LLN0 GEN4PHAR PH3PTOC PH3PTRC	LLN0 GEN4PHAR PH3PTOC PH3PTRC
OEXPVPH	OEXPVPH	OEXPVPH
OOSPPAM	OOSPPAM	LLN0 OOSPPAM OOSPTRC
OV2PTOV	GEN2LLN0 OV2PTOV PH1PTRC	LLN0 OV2PTOV PH1PTRC
PAPGAPC	PAPGAPC	PAPGAPC
PCFCNT	PCGGIO	PCFCNT
PH4SPTOC	OCNDLLN0 GEN4PHAR PH1BPTOC PH1PTRC	LLN0 GEN4PHAR PH1BPTOC PH1PTRC
PHPIOC	PHPIOC	PHPIOC
PRPSTATUS	RCHLCCH	RCHLCCH SCHLCCH
PSLPSCH	ZMRPSL	PSLPSCH
PSPPPAM	PSPPPAM	LLN0 PSPPPAM PSPPTRC
QCBAY	QCBAY	LLN0
QCRSV	QCRSV	QCRSV
REFPDIF	REFPDIF	REFPDIF
ROTIPHIZ	ROTIPHIZ	LLN0 ROTIPHIZ ROTIPTRC
ROV2PTOV	GEN2LLN0 PH1PTRC ROV2PTOV	LLN0 PH1PTRC ROV2PTOV

Table continues on next page

Function block name	Edition 1 logical nodes	Edition 2 logical nodes
SAPFRC	SAPFRC	SAPFRC
SAPTOF	SAPTOF	SAPTOF
SAPTUF	SAPTUF	SAPTUF
SCCVPTOC	SCCVPTOC	SCCVPTOC
SCILO	SCILO	SCILO
SCSWI	SCSWI	SCSWI
SDEPSDE	SDEPSDE	LLN0 SDEPSDE SDEPTOC SDEPTOV SDEPTRC
SESRSYN	RSY1LLN0 AUT1RSYN MAN1RSYN SYNRSYN	LLN0 AUT1RSYN MAN1RSYN SYNRSYN
SINGLELCCH		SCHLCCH
SLGAPC	SLGGIO	SLGAPC
SMBRREC	SMBRREC	SMBRREC
SMPPTRC	SMPPTRC	SMPPTRC
SP16GAPC	SP16GGIO	SP16GAPC
SPC8GAPC	SPC8GGIO	SPC8GAPC
SPGAPC	SPGGIO	SPGAPC
SSCBR	SSCBR	SSCBR
SSIMG	SSIMG	SSIMG
SSIML	SSIML	SSIML
STBPTOC	STBPTOC	STBPTOC
STEFPHIZ	STEFPHIZ	STEFPHIZ
STTIPHIZ	STTIPHIZ	STTIPHIZ
SXCBR	SXCBR	SXCBR
SXSWI	SXSWI	SXSWI
T2WPDIF	T2WPDIF	LLN0 T2WGAPC T2WPDIF T2WPHAR T2WPTRC
T3WPDIF	T3WPDIF	LLN0 T3WGAPC T3WPDIF T3WPHAR T3WPTRC
TCLYLTC	TCLYLTC	TCLYLTC
TCMYLTC	TCMYLTC	TCMYLTC
Table continues on next page		

Function block name	Edition 1 logical nodes	Edition 2 logical nodes
TEIGAPC	TEIGGIO	TEIGAPC
TMAGAPC	TMAGGIO	TMAGAPC
TR1ATCC	TR1ATCC	TR1ATCC
TR8ATCC	TR8ATCC	TR8ATCC
TRPTTR	TRPTTR	TRPTTR
UV2PTUV	GEN2LLN0 PH1PTRC UV2PTUV	LLN0 PH1PTRC UV2PTUV
VDCPTOV	VDCPTOV	VDCPTOV
VDSPVC	VDRFUF	VDSPVC
VMMXU	VMMXU	VMMXU
VMSQI	VMSQI	VMSQI
VNMMXU	VNMMXU	VNMMXU
VRPVOC	VRLLN0 PH1PTRC PH1PTUV VRPVOC	LLN0 PH1PTRC PH1PTUV VRPVOC
VSGAPC	VSGGIO	VSGAPC
WRNCALH		WRNCALH
ZC1PPSCH	ZPCPSCH	ZPCPSCH
ZC1WPSCH	ZPCWPSCH	ZPCWPSCH
ZCLCPSCH	ZCLCPLAL	LLN0 ZCLCPSCH
ZCPSCH	ZCPSCH	ZCPSCH
ZCRWPSCH	ZCRWPSCH	ZCRWPSCH
ZCVPSOF	ZCVPSOF	ZCVPSOF
ZGVPDIS	ZGVLLN0 PH1PTRC ZGVPDIS ZGVPTUV	LLN0 PH1PTRC ZGVPDIS ZGVPTUV
ZMCAPDIS	ZMCAPDIS	ZMCAPDIS
ZMCPDIS	ZMCPDIS	ZMCPDIS
ZMFCPDIS	ZMFCLLN0 PSFPDIS ZMFPDIS	LLN0 PSFPDIS ZMFPDIS
ZMFPDIS	ZMFLLN0 PSFPDIS ZMFPDIS	LLN0 PSFPDIS ZMFPDIS
ZMHPDIS	ZMHPDIS	ZMHPDIS
ZMMAPDIS	ZMMAPDIS	ZMMAPDIS
ZMMPDIS	ZMMPDIS	ZMMPDIS
Table continues on next page		

Function block name	Edition 1 logical nodes	Edition 2 logical nodes
ZMQAPDIS	ZMQAPDIS	ZMQAPDIS
ZMQPDIS	ZMQPDIS	ZMQPDIS
ZMRAPDIS	ZMRAPDIS	ZMRAPDIS
ZMRPDIS	ZMRPDIS	ZMRPDIS
ZMRPSB	ZMRPSB	ZMRPSB
ZSMGAPC	ZSMGAPC	ZSMGAPC

Section 2 Application

2.1 General IED application

REC670 is used for the control, protection and monitoring of different types of bays in power networks. The IED is especially suitable for applications in control systems where the IEC 61850–8–1 Ed 1 or Ed 2 station bus features of the REC670 can be fully utilized. It is used for station-wide interlocking via GOOSE messages and vertical client-server MMS communication to a local station or remote SCADA operator workplace. This supports the architecture with distributed control IEDs in all bays with high demands on reliability. Redundant communication is obtained through the built-in PRP feature which can be used in star or ringbus architectures. REC670 can be used on all voltage levels. It is suitable for the control of all apparatuses in any type of switchgear arrangement.

The control is performed from remote (SCADA/Station) through the IEC 61850–8–1 Ed1 or Ed2 station communication or from the built-in multi-display local HMI. Cyber security measures are implemented to secure safe autonomous operation of the protection and control functions even if simultaneous cyber attacks occur. For all common types of switchgear arrangements, there are different pre-configurations for control and interlocking. One REC670 control IED can be used for single bay or multi-bay applications. The control operation is based on the select-before-execute principle to give highest possible security. There are synchrocheck functions available to assist optimal breaker closing at the right instance in synchronous as well as asynchronous networks.

A number of protection functions are available for flexibility in use for different station types and busbar arrangements. To fulfil the user's application requirements, the REC670 features, for example, up to six instantaneous phase and ground overcurrent functions, 4–step directional or non-directional delayed-phase and ground overcurrent functions, thermal overload and frequency functions, two instances of 2–step under- and overvoltage functions, autorecloser functions and several different measuring functions. This, together with the multi-display local HMI that can show one or more pages per feeder allows using the REC670 for protection and control for up to six bays in a substation.

The auto-reclose for single-, two-, and/or three-pole reclose includes priority circuits for multi-breaker arrangements. It co-operates with the synchronism check function with high-speed or delayed reclosing. Several breaker failure functions are available to provide a breaker failure function independent from the protection IEDs, also for a complete breaker-and-a-half diameter.

Disturbance recording and fault locator are available to allow independent post-fault analysis after primary disturbances in case of a failure in the protection system.

Duplex communication channels for transfer of up to 192 intertrip and binary signals are available on each remote-end data communication card (LDCM). Typical applications are the communication between 670–series IEDs inside the station or with 670–series in a remote station as remote I/O.

Logic is prepared with a graphical tool. The advanced logic capability allows special applications such as automatic opening of disconnectors in multi-breaker arrangements, closing of breaker rings, load transfer logics and so on. The graphical configuration tool ensures simple and fast testing and commissioning.

2.2 Main protection functions

2	= number of basic instances
0-3	= option quantities
3-A03	= optional function included in packages A03 (refer to ordering details)

IEC 61850	ANSI	Function description	Bay control
			REC670
Differential protection			
HZPDIF	87	1Ph high impedance differential protection	0-6

2.3 Back-up protection functions

IEC 61850	ANSI	Function description	Bay control
			REC670
Current protection			
PHPIOC	50	Instantaneous phase overcurrent protection	0-6
OC4PTOC	51_67[1)]	Four step phase overcurrent protection	0-6
EFPIOC	50N	Instantaneous residual overcurrent protection	0-6
EF4PTOC	51N 67N[2)]	Four step residual overcurrent protection	0-6
NS4PTOC	46I2	Four step directional negative phase sequence overcurrent protection	0-6
SDEPSDE	67N	Sensitive directional residual overcurrent and power protection	0-6
LCPTTR	26	Thermal overload protection, one time constant, Celsius	0–6

Table continues on next page

IEC 61850	ANSI	Function description	Bay control
			REC670
LFPTTR	26	Thermal overload protection, one time constant, Fahrenheit	0–6
TRPTTR	49	Thermal overload protection, two time constant	0-6
CCRBRF	50BF	Breaker failure protection	0-6
STBPTOC	50STB	Stub protection	0-3
CCPDSC	52PD	Pole discordance protection	0-6
GUPPDUP	37	Directional underpower protection	0-2
GOPPDOP	32	Directional overpower protection	0-2
BRCPTOC	46	Broken conductor check	0-1
CBPGAPC		Capacitor bank protection	0-3
VRPVOC	51V	Voltage restrained overcurrent protection	0-3
Voltage protection			
UV2PTUV	27	Two step undervoltage protection	0-2
OV2PTOV	59	Two step overvoltage protection	0-2
ROV2PTOV	59N	Two step residual overvoltage protection	0-2
VDCPTOV	60	Voltage differential protection	0-6
LOVPTUV	27	Loss of voltage check	0-2
Frequency protection			
SAPTUF	81	Underfrequency protection	0-6
SAPTOF	81	Overfrequency protection	0-6
SAPFRC	81	Rate-of-change frequency protection	0-6
FTAQFVR	81A	Frequency time accumulation protection	0-12
Multipurpose protection			
CVGAPC		General current and voltage protection	0-9
General calculation			
SMAIHPAC		Multipurpose filter	0-6

1) 67 requires voltage
2) 67N requires voltage

2.4 Control and monitoring functions

IEC 61850	ANSI	Function description	Bay control
			REC670
Control			
SESRSYN	25	Synchrocheck, energizing check and synchronizing	0-6, 0-2
SMBRREC	79	Autorecloser	0-6, 0-4
APC8	3	Apparatus control for single bay, max 8 apparatuses (1CB) incl. interlocking	1
APC15	3	Apparatus control for single bay, max 15 apparatuses (2CBs) incl. interlocking	1
APC30	3	Apparatus control for up to 6 bays, max 30 apparatuses (6CBs) incl. interlocking	1
QCBAY		Apparatus control	1+5/APC30
LOCREM		Handling of LRswitch positions	1+5/APC30
LOCREMCTRL		LHMI control of PSTO	1
TR1ATCC	90	Automatic voltage control for tap changer, single control	0-4
TR8ATCC	90	Automatic voltage control for tap changer, parallel control	0-4
TCMYLTC	84	Tap changer control and supervision, 6 binary inputs	0-4
TCLYLTC	84	Tap changer control and supervision, 32 binary inputs	0-4
SLGAPC		Logic rotating switch for function selection and LHMI presentation	15
VSGAPC		Selector mini switch	20
DPGAPC		Generic communication function for Double Point indication	16
SPC8GAPC		Single point generic control 8 signals	5
AUTOBITS		AutomationBits, command function for DNP3.0	3
SINGLECMD		Single command, 16 signals	4
I103CMD		Function commands for IEC 60870-5-103	1
I103GENCMD		Function commands generic for IEC 60870-5-103	50
I103POSCMD		IED commands with position and select for IEC 60870-5-103	50
I103IEDCMD		IED commands for IEC 60870-5-103	1
I103USRCMD		Function commands user defined for IEC 60870-5-103	4
Secondary system supervision			
CCSSPVC	87	Current circuit supervision	0-6
FUFSPVC		Fuse failure supervision	0-4
VDSPVC	60	Fuse failure supervision based on voltage difference	0-2
Logic			
SMPPTRC	94	Tripping logic	6
TMAGAPC		Trip matrix logic	12

Table continues on next page

IEC 61850	ANSI	Function description	Bay control
			REC670
ALMCALH		Logic for group alarm	5
WRNCALH		Logic for group warning	5
INDCALH		Logic for group indication	5
AND, GATE, INV, LLD, OR, PULSETIMER, RSMEMORY, SRMEMORY, TIMERSET, XOR		Basic configurable logic blocks (see Table)	40-420
ANDQT, INDCOMBSPQTORQT, INDEXTSPQT, INVALIDQT, INVERTERQT, PULSETIMERQT, RSMEMORYQT, SRMEMORYQT, TIMERSETQT, XORQT		Configurable logic blocks Q/T (see Table)	0-1
AND, GATE, INV, LLD, OR, PULSETIMER, SLGAPC, SRMEMORY, TIMERSET, VSGAPC, XOR		Extension logic package (see Table)	0-1
FXDSIGN		Fixed signal function block	1
B16I		Boolean 16 to Integer conversion	18
BTIGAPC		Boolean 16 to Integer conversion with Logic Node representation	16
IB16		Integer to Boolean 16 conversion	18
ITBGAPC		Integer to Boolean 16 conversion with Logic Node representation	16
TEIGAPC		Elapsed time integrator with limit transgression and overflow supervision	12
Monitoring			
CMMXU		Measurements	10
CVMMXN, CMMXU, VMMXU, CMSQI, VMSQI, VNMMXU		Measurements	6
AISVBAS		Function block for service value presentation of secondary analog inputs	1
EVENT		Event function	20

Table continues on next page

IEC 61850	ANSI	Function description	Bay control
			REC670
DRPRDRE, A1RADR-A4RADR, B1RBDR-B22RBDR		Disturbance report	1
SPGAPC		Generic communication function for Single Point indication	64
SP16GAPC		Generic communication function for Single Point indication 16 inputs	24
MVGAPC		Generic communication function for Measured Value	24
BINSTATREP		Logical signal status report	3
RANGE_XP		Measured value expander block	66
SSIMG	63	Gas medium supervision	21
SSIML	71	Liquid medium supervision	3
SSCBR		Circuit breaker monitoring	0-18
LMBRFLO		Fault locator	0-1
I103MEAS		Measurands for IEC 60870-5-103	1
I103MEASUSR		Measurands user defined signals for IEC 60870-5-103	3
I103AR		Function status auto-recloser for IEC 60870-5-103	1
I103EF		Function status earth-fault for IEC 60870-5-103	1
I103FLTPROT		Function status fault protection for IEC 60870-5-103	1
I103IED		IED status for IEC 60870-5-103	1
I103SUPERV		Supervison status for IEC 60870-5-103	1
I103USRDEF		Status for user defiend signals for IEC 60870-5-103	20
L4UFCNT		Event counter with limit supervision	30
Metering			
PCFCNT		Pulse-counter logic	16
ETPMMTR		Function for energy calculation and demand handling	6

Table 2: Total number of instances for basic configurable logic blocks

Basic configurable logic block	Total number of instances
AND	280
GATE	40
INV	420
LLD	40
OR	280
PULSETIMER	40
RSMEMORY	40

Table continues on next page

Basic configurable logic block	Total number of instances
SRMEMORY	40
TIMERSET	60
XOR	40

Table 3: Total number of instances for configurable logic blocks Q/T

Configurable logic blocks Q/T	Total number of instances
ANDQT	120
INDCOMBSPQT	20
INDEXTSPQT	20
INVALIDQT	12
INVERTERQT	120
ORQT	120
PULSETIMERQT	40
RSMEMORYQT	40
SRMEMORYQT	40
TIMERSETQT	40
XORQT	40

Table 4: Total number of instances for extended logic package

Extended configurable logic block	Total number of instances
AND	180
GATE	49
INV	180
LLD	49
OR	180
PULSETIMER	59
SLGAPC	74
SRMEMORY	110
TIMERSET	49
VSGAPC	130
XOR	49

2.5 Communication

IEC 61850	ANSI	Function description	Bay control
			REC670
Station communication			
LONSPA, SPA		SPA communication protocol	1
ADE		LON communication protocol	1
HORZCOMM		Network variables via LON	1
PROTOCOL		Operation selection between SPA and IEC 60870-5-103 for SLM	1
RS485PROT		Operation selection for RS485	1
RS485GEN		RS485	1
DNPGEN		DNP3.0 communication general protocol	1
DNPGENTCP		DNP3.0 communication general TCP protocol	1
CHSERRS485		DNP3.0 for EIA-485 communication protocol	1
CH1TCP, CH2TCP, CH3TCP, CH4TCP		DNP3.0 for TCP/IP communication protocol	1
CHSEROPT		DNP3.0 for TCP/IP and EIA-485 communication protocol	1
MST1TCP, MST2TCP, MST3TCP, MST4TCP		DNP3.0 for serial communication protocol	1
DNPFREC		DNP3.0 fault records for TCP/IP and EIA-485 communication protocol	1
IEC61850-8-1		Parameter setting function for IEC 61850	1
GOOSEINTLKRCV		Horizontal communication via GOOSE for interlocking	59
GOOSEBINRCV		Goose binary receive	16
GOOSEDPRCV		GOOSE function block to receive a double point value	64
GOOSEINTRCV		GOOSE function block to receive an integer value	32
GOOSEMVRCV		GOOSE function block to receive a measurand value	60
GOOSESPRCV		GOOSE function block to receive a single point value	64
GOOSEVCTRCONF		GOOSE VCTR configuration for send and receive	1
VCTRSEND		Horizontal communication via GOOSE for VCTR	1

Table continues on next page

IEC 61850	ANSI	Function description	Bay control
			REC670
GOOSEVCTRRCV		Horizontal communication via GOOSE for VCTR	7
MULTICMDRCV, MULTICMDSND		Multiple command and transmit	60/10
FRONT, LANABI, LANAB, LANCDI, LANCD		Ethernet configuration of links	1
GATEWAY		Ethernet configuration of link one	1
OPTICAL103		IEC 60870-5-103 Optical serial communication	1
RS485103		IEC 60870-5-103 serial communication for RS485	1
AGSAL		Generic security application component	1
LD0LLN0		IEC 61850 LD0 LLN0	1
SYSLLN0		IEC 61850 SYS LLN0	1
LPHD		Physical device information	1
PCMACCS		IED Configuration Protocol	1
SECALARM		Component for mapping security events on protocols such as DNP3 and IEC103	1
FSTACCS		Field service tool access via SPA protocol over ethernet communication	1
ACTIVLOG		Activity logging parameters	1
ALTRK		Service Tracking	1
SINGLELCCH		Single ethernet port link status	1
PRPSTATUS		Dual ethernet port link status	1
PRP		IEC 62439-3 parallel redundancy protocol	0-1
Remote communication			
		Binary signal transfer receive/transmit	3/3/6
		Transmission of analog data from LDCM	1
		Receive binary status from remote LDCM	6/3/3
Scheme communication			
ZCPSCH	85	Scheme communication logic for distance or overcurrent protection	0-1
ZCRWPSCH	85	Current reversal and weak-end infeed logic for distance protection	0-1

Table continues on next page

IEC 61850	ANSI	Function description	Bay control
			REC670
ZCLCPSCH		Local acceleration logic	0-1
ECPSCH	85	Scheme communication logic for residual overcurrent protection	0-1
ECRWPSCH	85	Current reversal and weak-end infeed logic for residual overcurrent protection	0-1

2.6 Basic IED functions

Table 5: Basic IED functions

IEC 61850 or function name	Description
INTERRSIG SELFSUPEVLST	Self supervision with internal event list
TIMESYNCHGEN	Time synchronization module
BININPUT, SYNCHCAN, SYNCHGPS, SYNCHCMPPS, SYNCHLON, SYNCHPPH, SYNCHPPS, SNTP, SYNCHSPA	Time synchronization
TIMEZONE	Time synchronization
DSTBEGIN, DSTENABLE, DSTEND	GPS time synchronization module
IRIG-B	Time synchronization
SETGRPS	Number of setting groups
ACTVGRP	Parameter setting groups
TESTMODE	Test mode functionality
CHNGLCK	Change lock function
TERMINALID	IED identifiers
SYSTEMTIME	System time
LONGEN	Misc Base Common
SMBI	Signal matrix for binary inputs
SMBO	Signal matrix for binary outputs
SMMI	Signal matrix for mA inputs
SMAI1 - SMAI12	Signal matrix for analog inputs
ATHSTAT	Authority status
ATHCHCK	Authority check

Table continues on next page

IEC 61850 or function name	Description
AUTHMAN	Authority management
FTPACCS	FTP access with password
SPACOMMMAP	SPA communication mapping
SPATD	Date and time via SPA protocol
DOSFRNT	Denial of service, frame rate control for front port
DOSLANAB	Denial of service, frame rate control for OEM port AB
DOSLANCD	Denial of service, frame rate control for OEM port CD
DOSSCKT	Denial of service, socket flow control
BCSCONF	Basic communication system
GBASVAL	Global base values for settings
PRIMVAL	Primary system values
ALTMS	Time master supervision
ALTIM	Time management
MSTSER	DNP3.0 for serial communication protocol
PRODINF	Product information
RUNTIME	IED Runtime Comp
SAFEFILECOPY	Safe file copy function

Section 3 Configuration

3.1 Introduction

The IED is available to be ordered in three different alternatives with the configuration suitable for the application. The control application will normally require adaptation of interlocking signals, mimic adaptation to the specific arrangements etc. as e.g. the availability of grounding switches varies.

The main protection functions are switched *Disabled* at delivery. Back-up functions that are not generally used are also set to*Disabled*.

The configurations are:

- Single-breaker arrangement, single or double busbar.
- Double bus/double breaker arrangement.
- Breaker-and-a-half arrangement (one complete diameter).

The number of IO must be ordered to the application where more IO is foreseen to be required in the Double and Breaker-and-a-half arrangement.

The configuration is done for the complete control and measurement in the bays. Interlocking is provided and configured to be default done across bays with GOOSE messaging according to the IEC61850-8-1 standard.

Complete projects are provided with setting, signal matrix, mimic and the application configuration prepared and for single breaker arrangements multiple feeders and the bus coupler configurations are available and can simply be downloaded.

Synchronism check function is included for controlled closing of the circuit breakers.

Disconnectors and grounding switches are proposed and foreseen to be switched double pole to have highest possible security against unnecessary operations due to, for example a single- ground fault in the control circuit.

Protection functions are option and are not configured.

All IEDs can be reconfigured with help of the application configuration tool, being part of the PCM600 platform. This way the IED can be made suitable for special applications and special logic can be developed i.e. logic for automatic opening of disconnectors and closing ring bays, automatic load transfer from one busbar to the other, and so on.

On request, ABB is available to support the re-configuration work, either directly or to do the design checking.

Optional functions and optional IO ordered will not be configured at delivery. It should be noted that the standard only includes one binary input and one binary output module and only the key functions such as tripping are connected to the outputs in the signal matrix tool. The required total IO must be calculated and specified at ordering.

Optional functions and optional IO ordered will not be configured at delivery. It should be noted that the standard only includes one binary input and one binary output module and only the key functions such as tripping are connected to the outputs. The required total IO must be calculated and specified at ordering.

The configurations are as far as found necessary provided with application comments to explain why the signals have been connected in the special way. This is of course for the special application features created, not for “standard” functionality.

3.2 Description of configuration REC670

3.2.1 Introduction

3.2.1.1 Description of configuration A30

The configuration of the IED is shown in Figure 2.

This configuration is used in single breaker arrangements with single or double busbar.

Control, measuring and interlocking is fully configured.

The following should be noted. The configuration is made with the binary input and binary output boards in the basic delivery. In many cases this is sufficient, in other cases, for example with full control of all apparatuses included, more IO cards are required. Our proposal for a full version with control is to use two binary input modules and one binary output module.

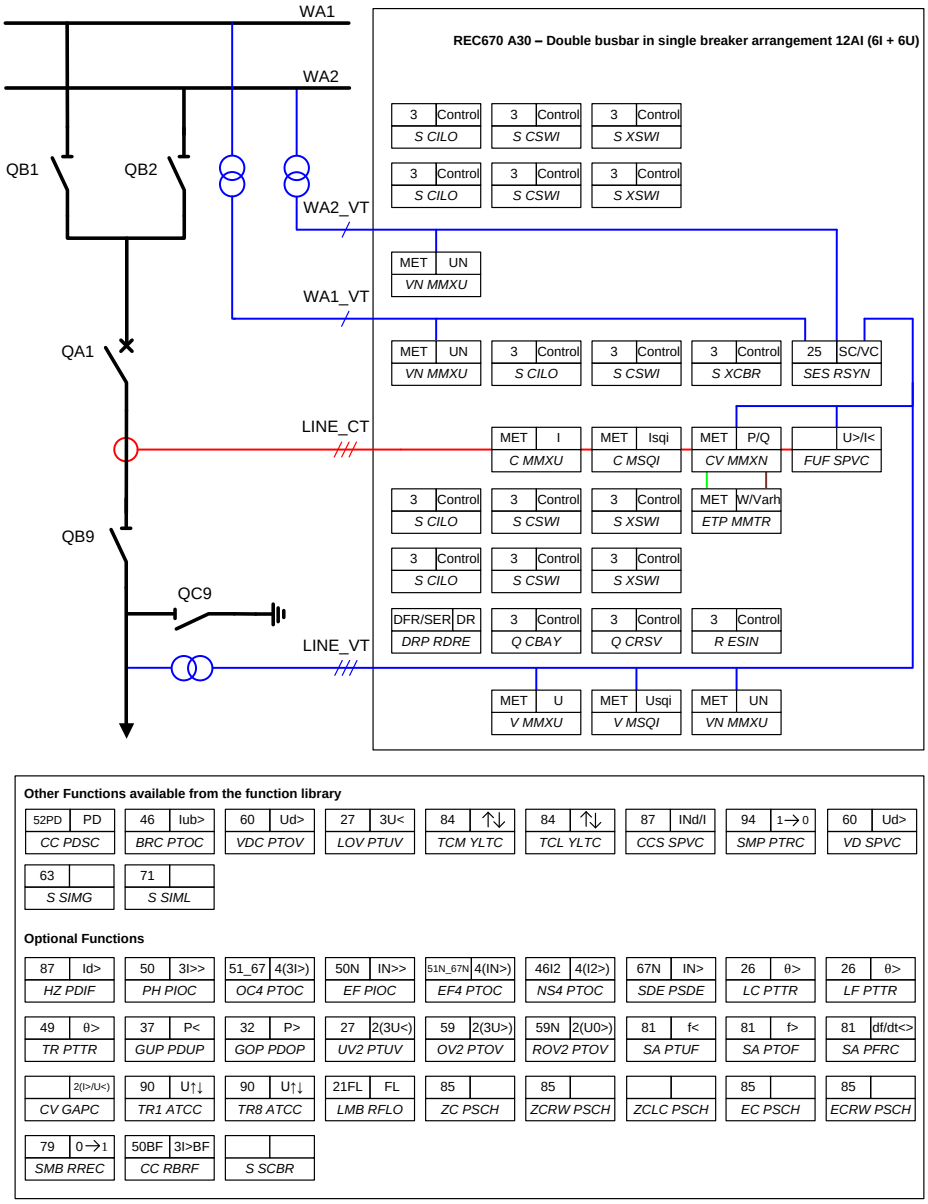

Figure 2: Configuration diagram for configuration A30

3.2.1.2 Description of configuration A31

The configuration of the IED is shown in Figure 3

This configuration is used in a Bus Coupler Bay arrangement.

Control, measuring and interlocking is fully configured.

The following should be noted. The configuration is made with the binary input and binary output boards in the basic delivery. In many cases this is sufficient, in other cases, for example with full control of all apparatuses included, more IO cards are required. Our proposal for a full version with control is to use two binary input modules and one binary output module.

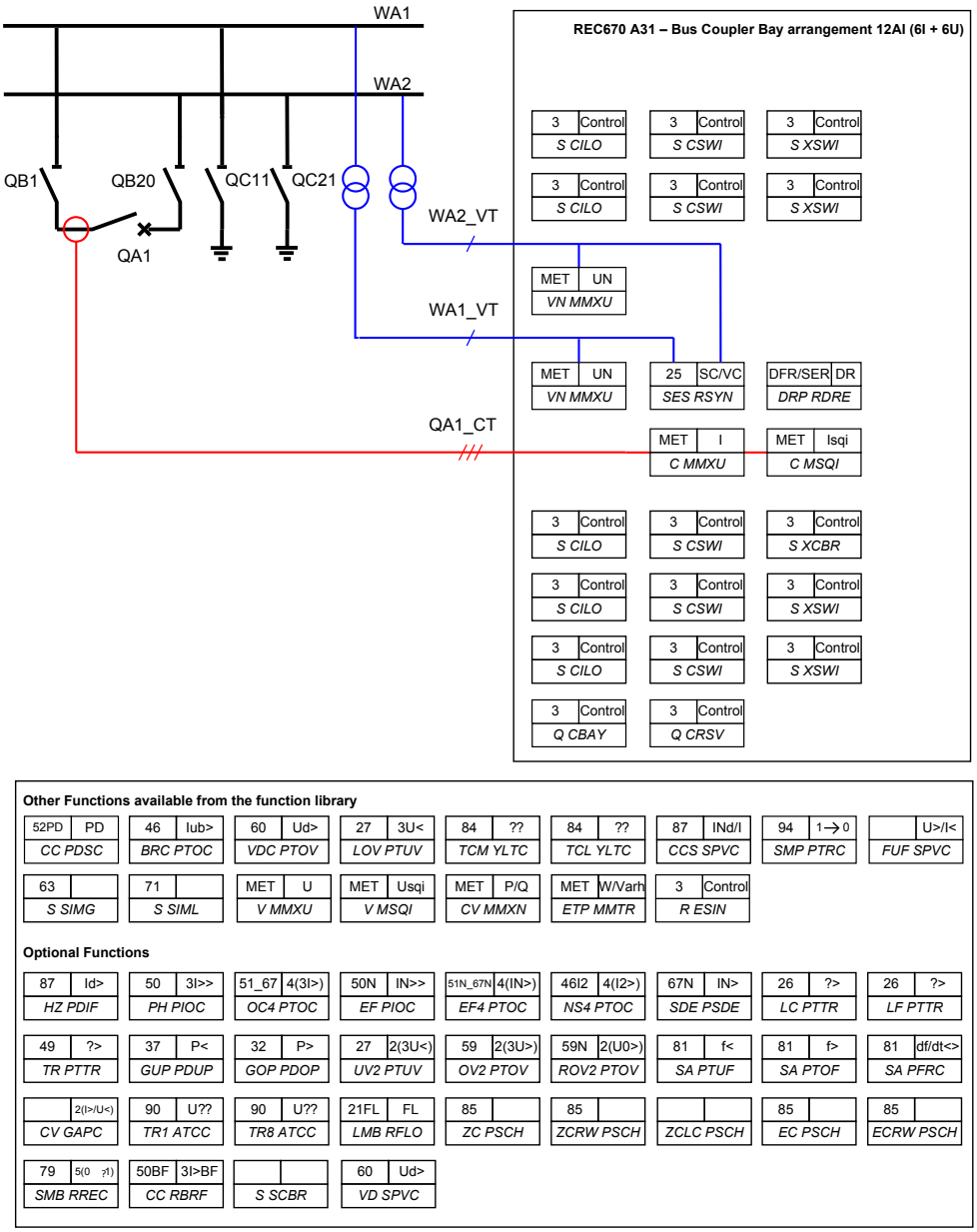

Figure 3: Configuration diagram for configuration A31

3.2.1.3 Description of configuration B30

The configuration of the IED is shown in Figure 4.

This configuration is used in double breaker arrangements.

Control, measuring and interlocking is fully configured, including communication with other bays such as other lines and the bus coupler over GOOSE.

The following should be noted. The configuration is made with the binary input and binary output boards in the basic IED delivery. In many cases this is sufficient, in other cases e.g. with full control of all apparatuses included more IO cards are required. Our proposal for a full version with control is to use two binary input modules and one or two binary output modules. For systems without Substation Automation a second binary output board might be required.

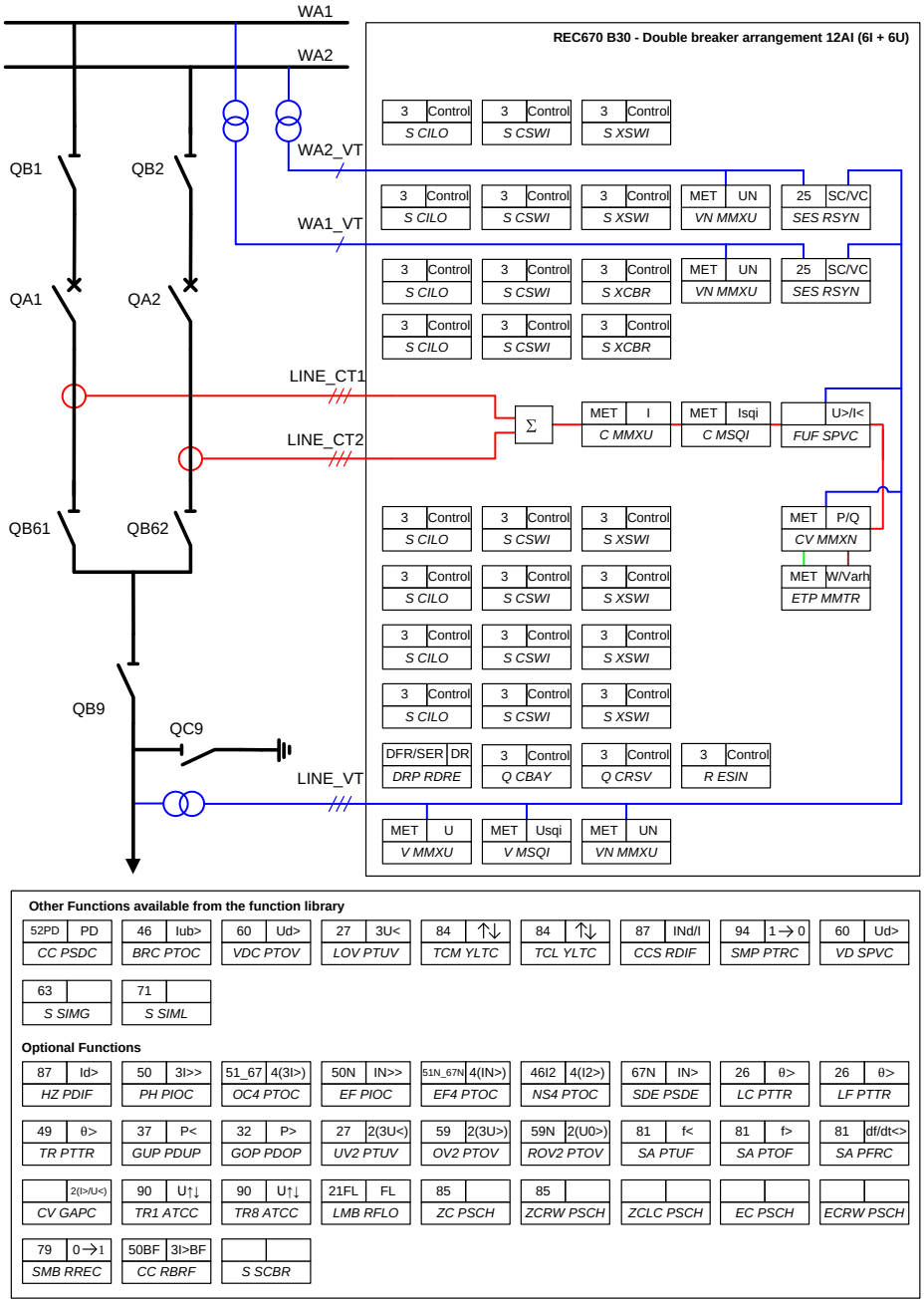

Figure 4: Configuration diagram for configuration B30

3.2.1.4 Description of configuration C30

The configuration of the IED is shown on Figure 5.

This configuration is used in breaker-and-a-half arrangements for a full diameter. The configuration can also be used for a section of the diameter with utilization of a part of the apparatuses only.

Control, measuring and interlocking is fully configured, including communication with other bays such as other lines and the bus coupler over GOOSE.

The following should be noted. The configuration is made with the binary input and binary output boards in the basic IED delivery. In many cases this is sufficient, in other cases, for example with full control of all apparatuses included more IO cards are required. Our proposal for a full version with control is to use three binary input modules and two binary output modules. For systems without Substation Automation a second binary output board might be required.

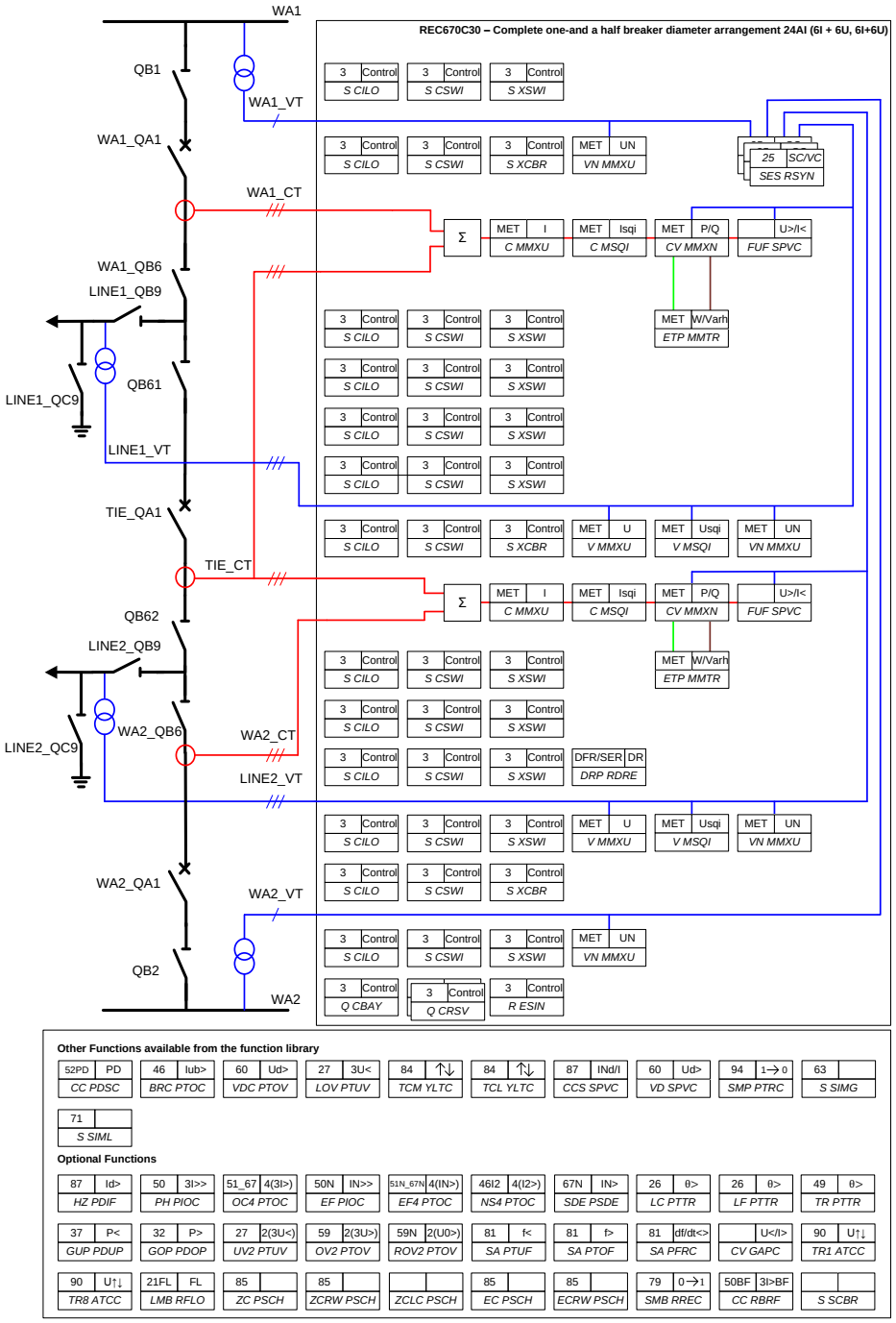

Figure 5: Configuration diagram for configuration C30

Four packages have been defined for following applications:

- Single breaker (double or single bus) arrangement (A30)
- Bus coupler for double busbar (A31)
- Double breaker arrangement (B30)
- Breaker-and-a-half arrangement for a complete diameter (C30)

Optional functions are available in PCM600 Application Configuration Tool and can be configured by the user. Interface to analog and binary IO:s are configurable without need of configuration changes. Analog and control circuits have been pre-defined. Other signals need to be applied as required for each application. The main differences between the packages above are the interlocking modules and the number of apparatuses to control.

Section 4 Analog inputs

4.1 Analog inputs

4.1.1 Introduction

Analog input channels must be configured and set properly in order to get correct measurement results and correct protection operations. For power measuring and all directional and differential functions the directions of the input currents must be defined in order to reflect the way the current transformers are installed/connected in the field (primary and secondary connections). Measuring and protection algorithms in the IED use primary system quantities. Setting values are in primary quantities as well and it is important to set the data about the connected current and voltage transformers properly.

A reference *PhaseAngleRef* can be defined to facilitate service values reading. This analog channels phase angle will always be fixed to zero degrees and all other angle information will be shown in relation to this analog input. During testing and commissioning of the IED the reference channel can be changed to facilitate testing and service values reading.

The availability of VT inputs depends on the ordered transformer input module (TRM) type.

4.1.2 Setting guidelines

The available setting parameters related to analog inputs are depending on the actual hardware (TRM) and the logic configuration made in PCM600.

4.1.2.1 Setting of the phase reference channel

All phase angles are calculated in relation to a defined reference. An appropriate analog input channel is selected and used as phase reference. The parameter *PhaseAngleRef* defines the analog channel that is used as phase angle reference.

Example

The setting *PhaseAngleRef=7* shall be used if a phase-to-ground voltage (usually the A phase-to-ground voltage connected to VT channel number 7 of the analog card) is selected to be the phase reference.

Setting of current channels

The direction of a current to the IED is depending on the connection of the CT. Unless indicated otherwise, the main CTs are supposed to be Wye (star) connected and can be connected with the grounding point to the object or from the object. This information must be set in the IED. The convention of the directionality is defined as follows: A positive value of current, power, and so on means that the quantity has the direction into the object and a negative value means direction out from the object. For directional functions the direction into the object is defined as Forward and the direction out from the object is defined as Reverse. See figure 6

A positive value of current, power, and so on (forward) means that the quantity has a direction towards the object. - A negative value of current, power, and so on (reverse) means a direction away from the object. See figure 6.

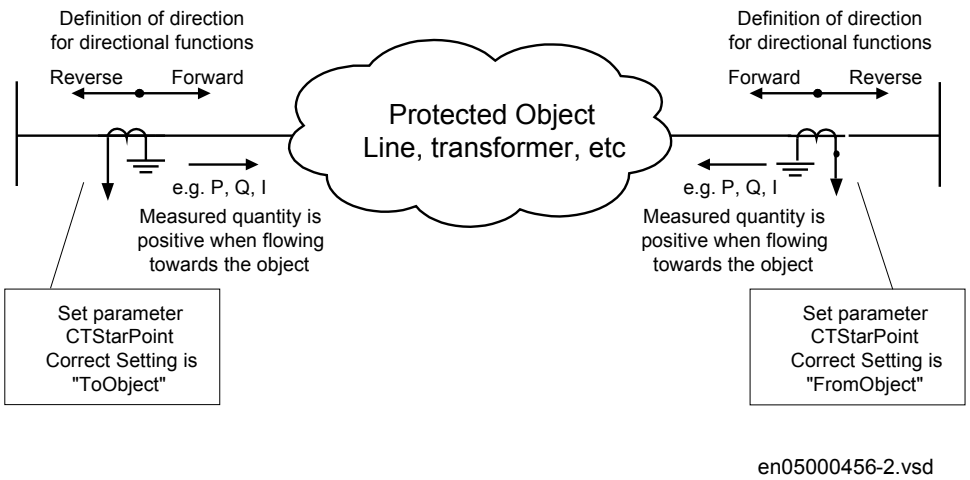

Figure 6: Internal convention of the directionality in the IED

With correct setting of the primary CT direction, *CT_WyePoint* set to *FromObject* or *ToObject*, a positive quantities always flowing towards the object and a direction defined as Forward always is looking towards the object. The following examples show the principle.

Example 1

Two IEDs used for protection of two objects.

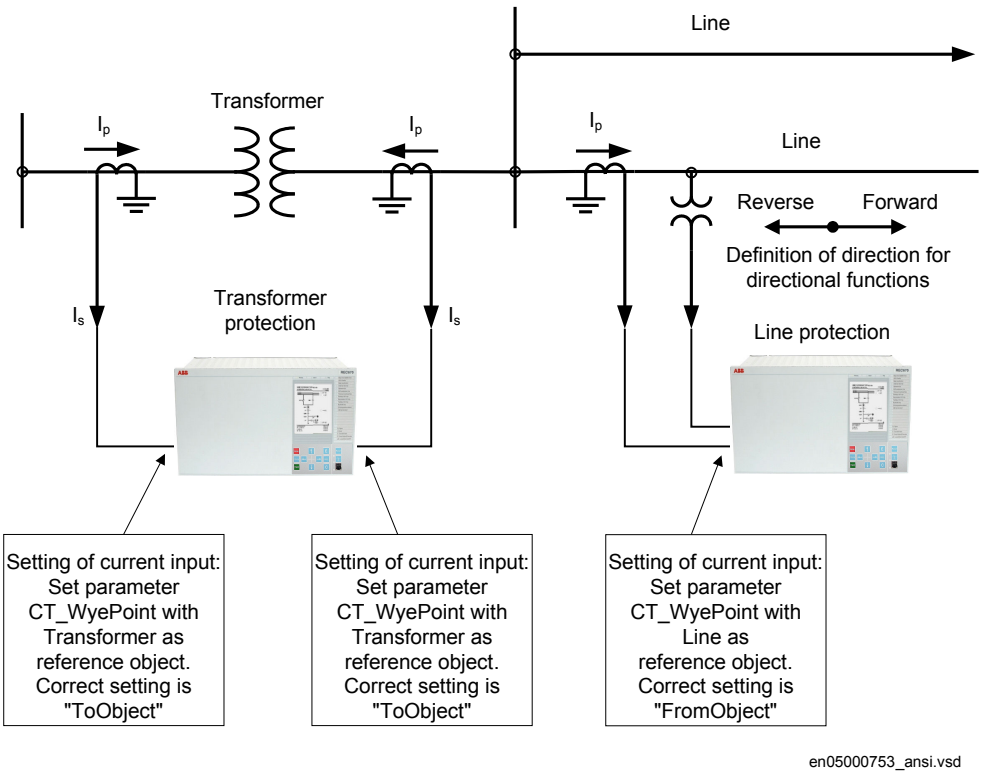

Figure 7: Example how to set CT_WyePoint parameters in the IED

The figure 7 shows the normal case where the objects have their own CTs. The settings for CT direction shall be done according to the figure. To protect the line the direction of the directional functions of the line protection shall be set to *Forward*. This means that the protection is looking towards the line.

Example 2

Two IEDs used for protection of two objects and sharing a CT.

Figure 8: Example how to set CT_WyePoint parameters in the IED

This example is similar to example 1, but here the transformer is feeding just one line and the line protection uses the same CT as the transformer protection does. The CT direction is set with different reference objects for the two IEDs though it is the same current from the same CT that is feeding the two IEDs. With these settings the directional functions of the line protection shall be set to *Forward* to look towards the line.

Example 3

One IED used to protect two objects.

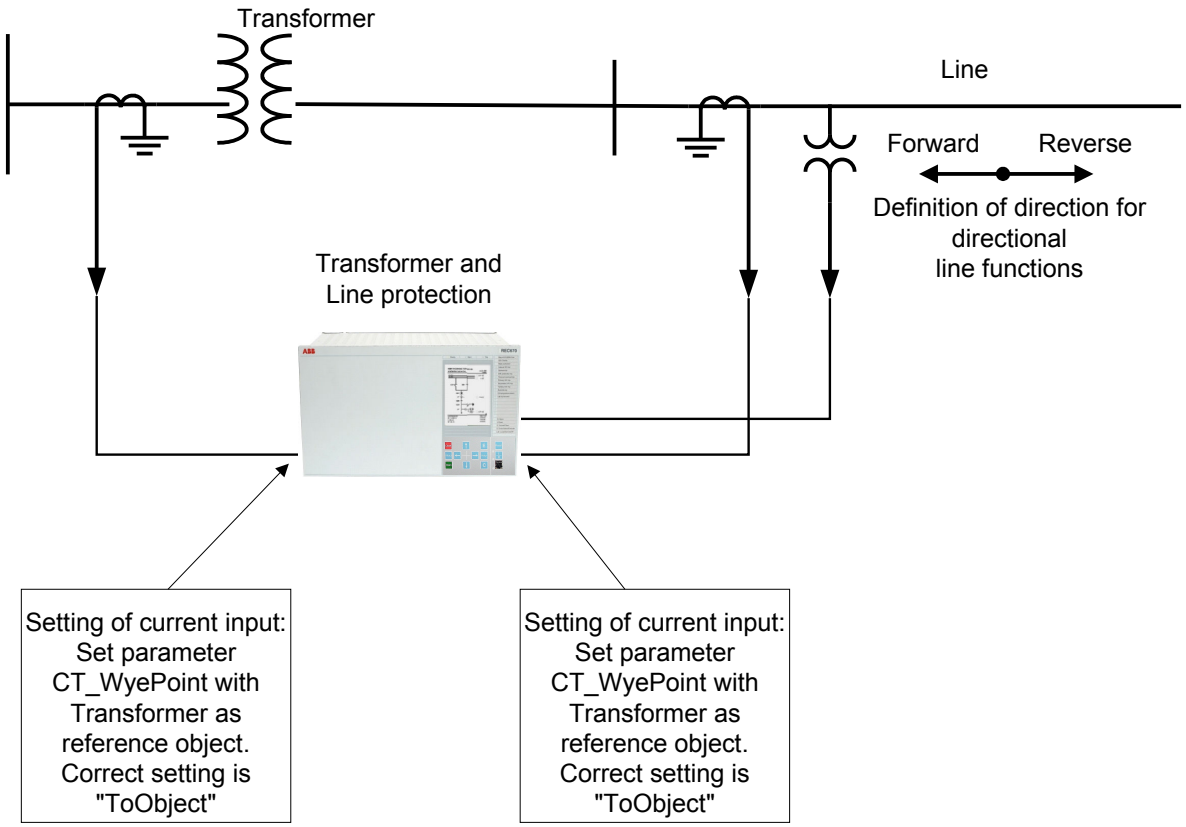

en05000461_ansi.vsd

Figure 9: Example how to set CT_WyePoint parameters in the IED

In this example one IED includes both transformer and line protection and the line protection uses the same CT as the transformer protection does. For both current input channels the CT direction is set with the transformer as reference object. This means that the direction Forward for the line protection is towards the transformer. To look towards the line the direction of the directional functions of the line protection must be set to *Reverse*. The direction *Forward*/*Reverse* is related to the reference object that is the transformer in this case.

When a function is set to *Reverse* and shall protect an object in reverse direction it shall be noted that some directional functions are not symmetrical regarding the reach in forward and reverse direction. It is in first hand the reach of the directional criteria that can differ. Normally it is not any limitation but it is advisable to have it in mind and check if it is acceptable for the application in question.

If the IED has a sufficient number of analog current inputs an alternative solution is shown in figure 10. The same currents are fed to two separate groups of inputs and the line and

transformer protection functions are configured to the different inputs. The CT direction for the current channels to the line protection is set with the line as reference object and the directional functions of the line protection shall be set to *Forward* to protect the line.

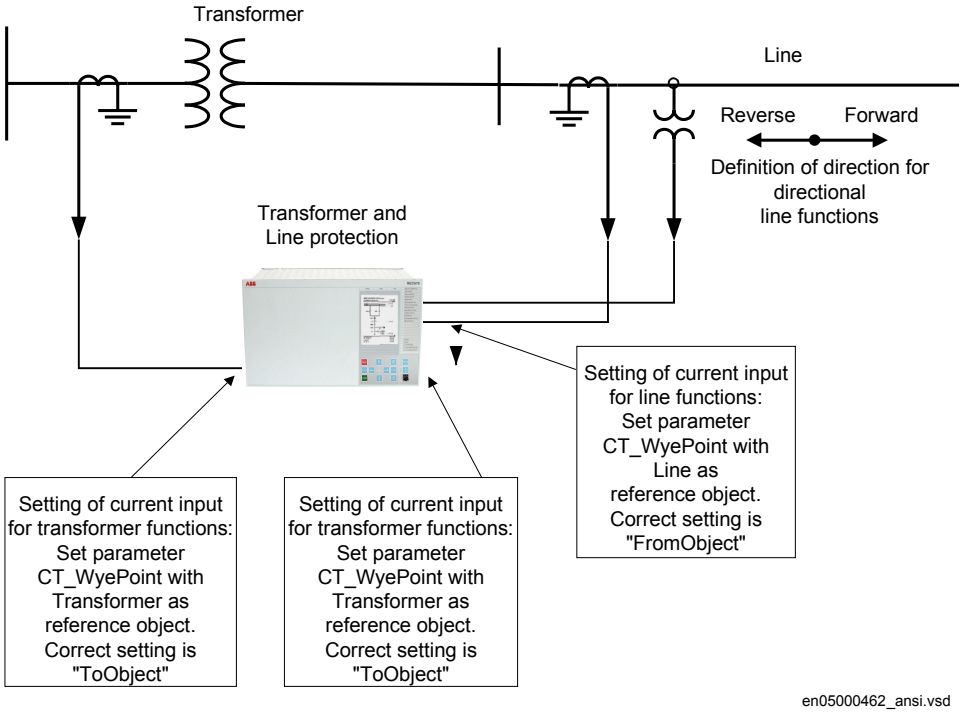

Figure 10: Example how to set CT_WyePoint parameters in the IED

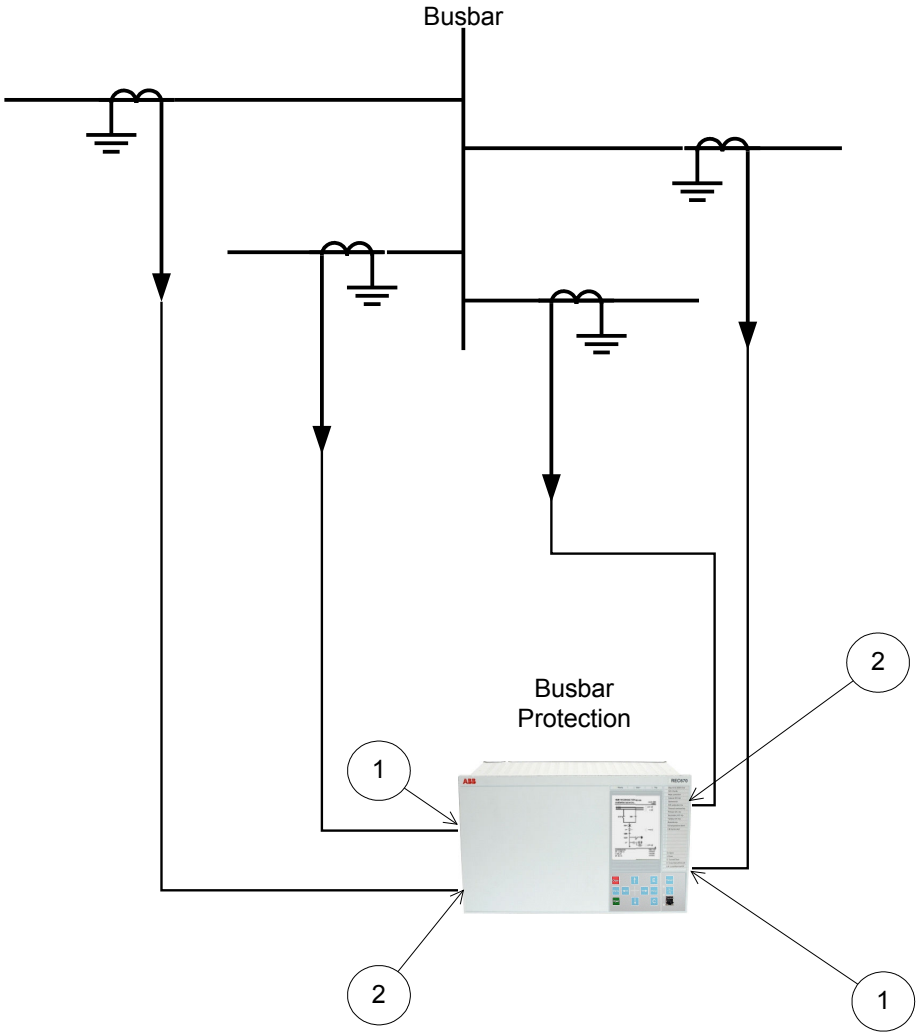

en06000196_ansi.vsd

Figure 11: Example how to set CT_WyePoint parameters in the IED

For busbar protection it is possible to set the *CT_WyePoint* parameters in two ways.

The first solution will be to use busbar as a reference object. In that case for all CT inputs marked with 1 in figure 11, set *CT_WyePoint = ToObject*, and for all CT inputs marked with 2 in figure 11, set *CT_WyePoint = FromObject*.

The second solution will be to use all connected bays as reference objects. In that case for all CT inputs marked with 1 in figure 11, set *CT_WyePoint = FromObject*, and for all CT inputs marked with 2 in figure 11, set *CT_WyePoint = ToObject*.

Regardless which one of the above two options is selected busbar differential protection will behave correctly.

The main CT ratios must also be set. This is done by setting the two parameters *CTsec* and *CTprim* for each current channel. For a 1000/5 A CT the following setting shall be used:

- *CTprim = 1000* (value in A)
- *CTsec =5* (value in A).

Examples on how to connect, configure and set CT inputs for most commonly used CT connections

Figure 12 defines the marking of current transformer terminals commonly used around the world:

In the SMAI function block, you have to set if the SMAI block is measuring current or voltage. This is done with the parameter: *AnalogInputType*: Current/voltage. The *ConnectionType*: phase -phase/ phase-earth and *GlobalBaseSel*.

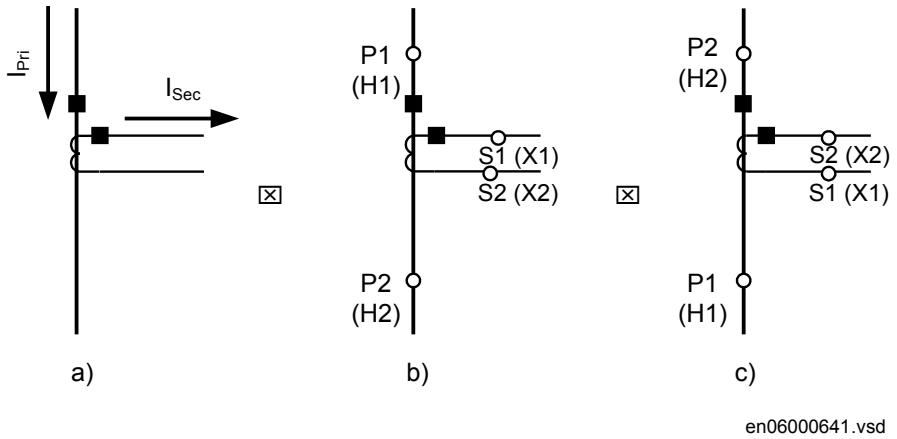

Figure 12: Commonly used markings of CT terminals

Where:

a) is symbol and terminal marking used in this document. Terminals marked with a square indicates the primary and secondary winding terminals with the same (that is, positive) polarity

b) and c) are equivalent symbols and terminal marking used by IEC (ANSI) standard for CTs. Note that for these two cases the CT polarity marking is correct!

It shall be noted that depending on national standard and utility practices, the rated secondary current of a CT has typically one of the following values:

- 1A
- 5A

However in some cases the following rated secondary currents are used as well:

- 2A
- 10A

The IED fully supports all of these rated secondary values.

It is recommended to:

- use 1A rated CT input into the IED in order to connect CTs with 1A and 2A secondary rating
- use 5A rated CT input into the IED in order to connect CTs with 5A and 10A secondary rating

Example on how to connect a wye connected three-phase CT set to the IED

Figure 13 gives an example about the wiring of a wye connected three-phase CT set to the IED. It gives also an overview of the actions which are needed to make this measurement available to the built-in protection and control functions within the IED as well.

For correct terminal designations, see the connection diagrams valid for the delivered IED.

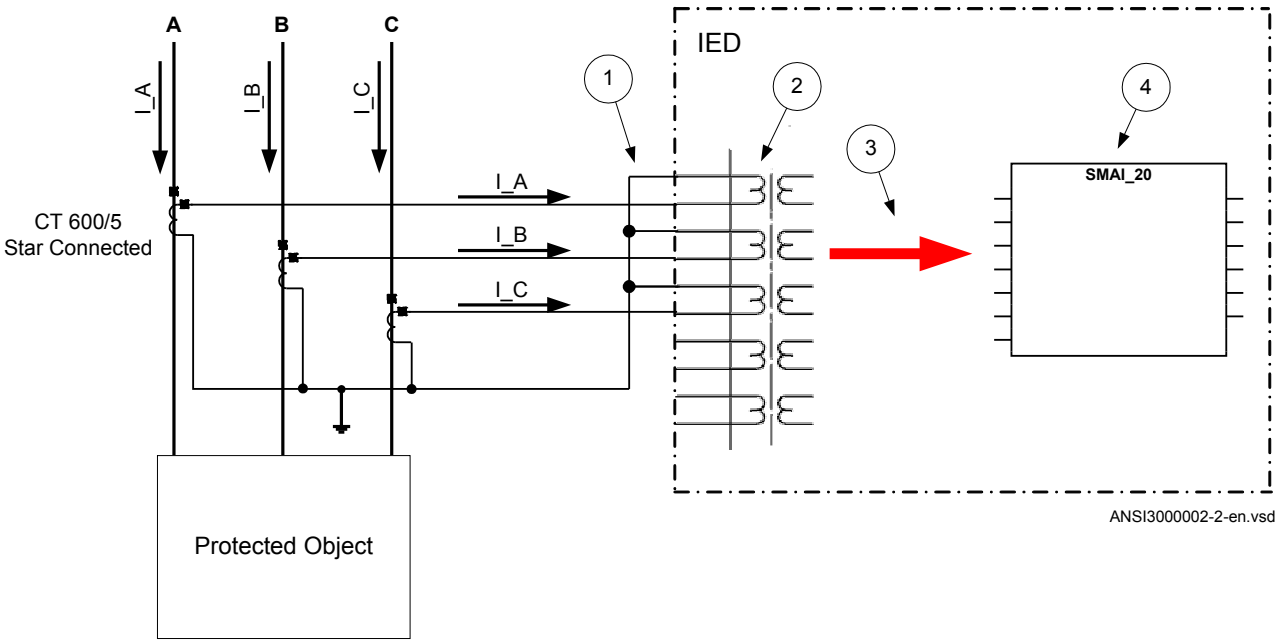

Figure 13: Wye connected three-phase CT set with wye point towards the protected object

Where:

1) The drawing shows how to connect three individual phase currents from a wye connected three-phase CT set to the three CT inputs of the IED.

2) The current inputs are located in the TRM. It shall be noted that for all these current inputs the following setting values shall be entered for the example shown in Figure13.
'

- CTprim=600A
- CTsec=5A
- CTStarPoint=ToObject

Inside the IED only the ratio of the first two parameters is used. The third parameter (CTStarPoint=ToObject) as set in this example causes no change on the measured currents. In other words, currents are already measured towards the protected object.

Table continues on next page

3) These three connections are the links between the three current inputs and the three input channels of the preprocessing function block 4). Depending on the type of functions, which need this current information, more than one preprocessing block might be connected in parallel to the same three physical CT inputs.

4) The preprocessing block that has the task to digitally filter the connected analog inputs and calculate:

- fundamental frequency phasors for all three input channels
- harmonic content for all three input channels
- positive, negative and zero sequence quantities by using the fundamental frequency phasors for the first three input channels (channel one taken as reference for sequence quantities)

These calculated values are then available for all built-in protection and control functions within the IED, which are connected to this preprocessing function block. For this application most of the preprocessing settings can be left to the default values.
If frequency tracking and compensation is required (this feature is typically required only for IEDs installed in power plants), then the setting parameters DFTReference shall be set accordingly. Section SMAI in this manual provides information on adaptive frequency tracking for the signal matrix for analogue inputs (SMAI).

5) AI3P in the SMAI function block is a grouped signal which contains all the data about the phases L1, L2, L3 and neutral quantity; in particular the data about fundamental frequency phasors, harmonic content and positive sequence, negative and zero sequence quantities are available. AI1, AI2, AI3, AI4 are the output signals from the SMAI function block which contain the fundamental frequency phasors and the harmonic content of the corresponding input channels of the preprocessing function block.
AIN is the signal which contains the fundamental frequency phasors and the harmonic content of the neutral quantity; this data is calculated by the preprocessing function block on the basis of the inputs GRPL1, GRPL2 and GRPL3.

Another alternative is to have the star point of the three-phase CT set as shown in the figure below:

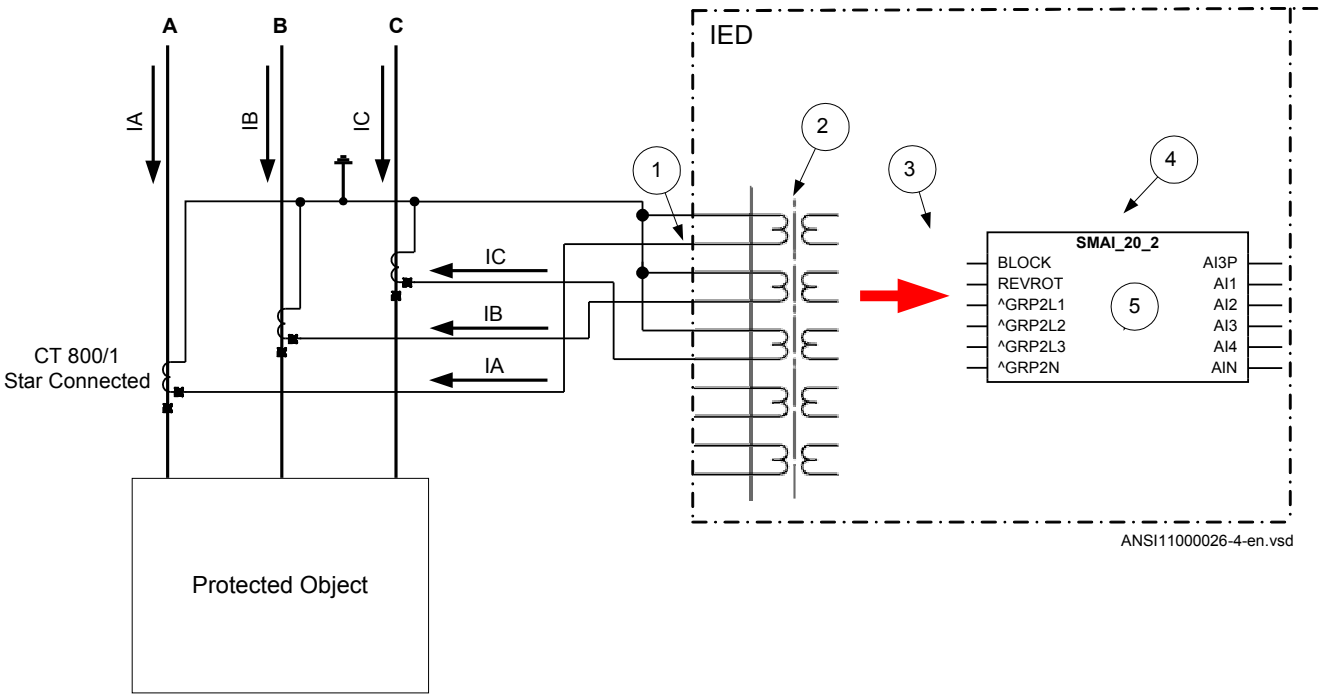

Figure 14: Wye connected three-phase CT set with its star point away from the protected object

In the example in figure 14 case everything is done in a similar way as in the above described example (figure 13). The only difference is the setting of the parameter *CTStarPoint* of the used current inputs on the TRM (item 2 in the figure):

- *CTprim*=600A
- *CTsec*=5A
- *CTWyePoint*=FromObject

Inside the IED only the ratio of the first two parameters is used. The third parameter as set in this example will negate the measured currents in order to ensure that the currents are measured towards the protected object within the IED.

A third alternative is to have the residual/neutral current from the three-phase CT set connected to the IED as shown in the figure below.

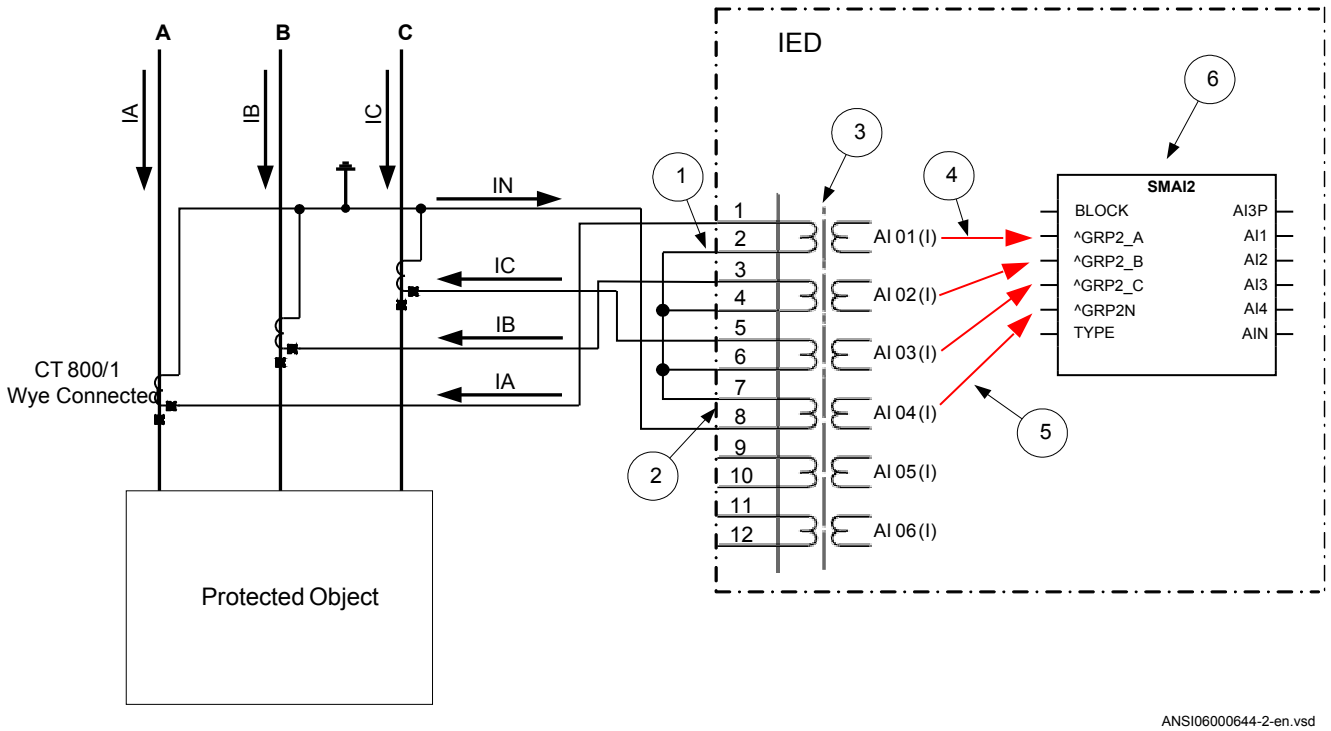

Figure 15: Wye connected three-phase CT set with its star point away from the protected object and the residual/ neutral current connected to the IED

Where:

1) The drawing shows how to connect three individual phase currents from a wye connected three-phase CT set to the three CT inputs of the IED.

2) shows how to connect residual/neutral current from the three-phase CT set to the fourth inputs in the IED. It shall be noted that if this connection is not made, the IED will still calculate this current internally by vectorial summation of the three individual phase currents.

3) is the TRM where these current inputs are located. It shall be noted that for all these current inputs the following setting values shall be entered.

- CTprim=800A
- CTsec=1A
- CTStarPoint=FromObject
- ConnectionType=Ph-N

Inside the IED only the ratio of the first two parameters is used. The third parameter as set in this example will have no influence on the measured currents (that is, currents are already measured towards the protected object).

4) are three connections made in the Signal Matrix tool (SMT), Application configuration tool (ACT), which connects these three current inputs to the first three input channels on the preprocessing function block 6). Depending on the type of functions, which need this current information, more than one preprocessing block might be connected in parallel to these three CT inputs.

Table continues on next page

5) is a connection made in the Signal Matrix tool (SMT), Application configuration tool (ACT), which connects the residual/neutral current input to the fourth input channel of the preprocessing function block 6). Note that this connection in SMT shall not be done if the residual/neutral current is not connected to the IED. In that case the pre-processing block will calculate it by vectorial summation of the three individual phase currents.

6) is a Preprocessing block that has the task to digitally filter the connected analog inputs and calculate:

- fundamental frequency phasors for all four input channels
- harmonic content for all four input channels
- positive, negative and zero sequence quantities by using the fundamental frequency phasors for the first three input channels (channel one taken as reference for sequence quantities)

These calculated values are then available for all built-in protection and control functions within the IED, which are connected to this preprocessing function block in the configuration tool. For this application most of the preprocessing settings can be left to the default values.
If frequency tracking and compensation is required (this feature is typically required only for IEDs installed in the generating stations), then the setting parameters DFTReference shall be set accordingly.

Example how to connect delta connected three-phase CT set to the IED

Figure 16 gives an example how to connect a delta connected three-phase CT set to the IED. It gives an overview of the required actions by the user in order to make this measurement available to the built-in protection and control functions in the IED as well.

For correct terminal designations, see the connection diagrams valid for the delivered IED.

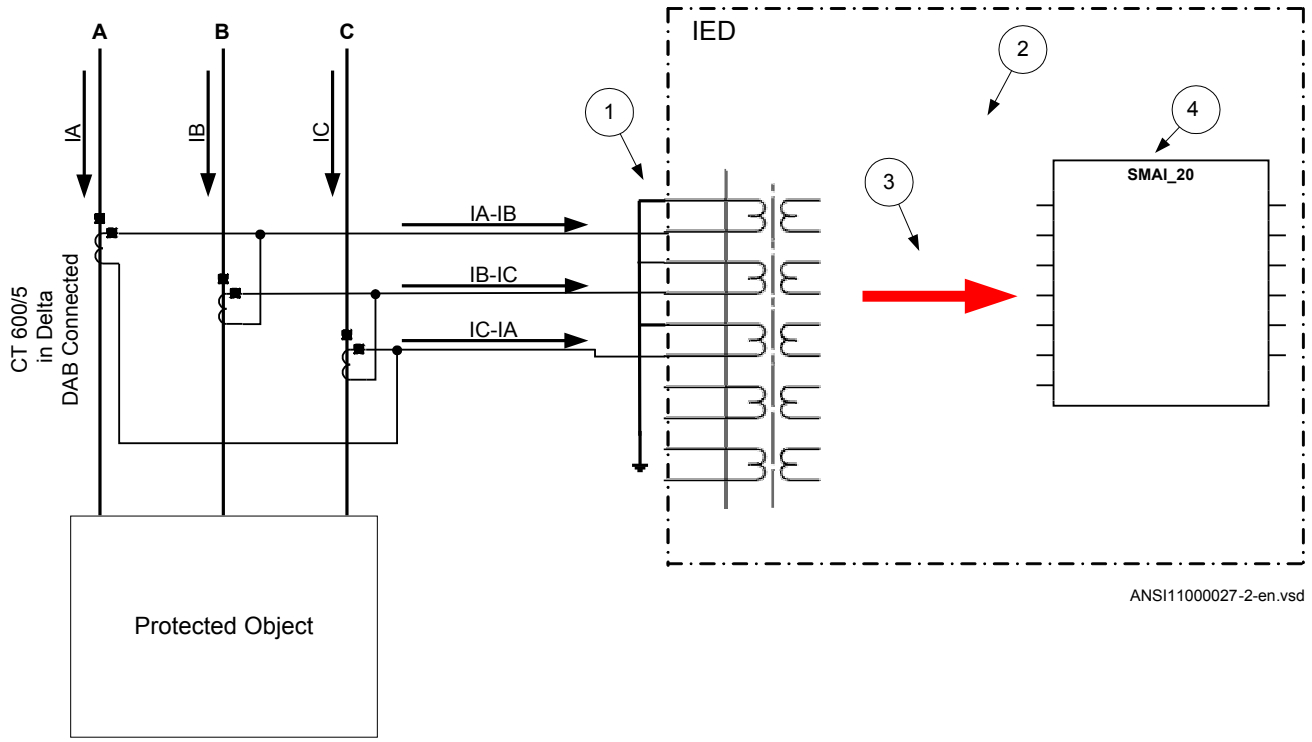

Figure 16: Delta DAB connected three-phase CT set

Where:

1) shows how to connect three individual phase currents from a delta connected three-phase CT set to three CT inputs of the IED.

2) is the TRM where these current inputs are located. It shall be noted that for all these current inputs the following setting values shall be entered.
CT_{prim}=600A
CT_{sec}=5A

- *CTWyePoint=ToObject*
- *ConnectionType=Ph-Ph*

3) are three connections made in Signal Matrix Tool (SMT), Application configuration tool (ACT), which connect these three current inputs to first three input channels of the preprocessing function block 4). Depending on the type of functions which need this current information, more then one preprocessing block might be connected in parallel to these three CT inputs.

4) is a Preprocessing block that has the task to digitally filter the connected analog inputs and calculate:

- fundamental frequency phasors for all three input channels
- harmonic content for all three input channels
- positive, negative and zero sequence quantities by using the fundamental frequency phasors for the first three input channels (channel one taken as reference for sequence quantities)

These calculated values are then available for all built-in protection and control functions within the IED, which are connected to this preprocessing function block. For this application most of the preprocessing settings can be left to the default values.
If frequency tracking and compensation is required (this feature is typically required only for IEDs installed in the generating stations) then the setting parameters *DFTReference* shall be set accordingly.

Another alternative is to have the delta connected CT set as shown in figure 17:

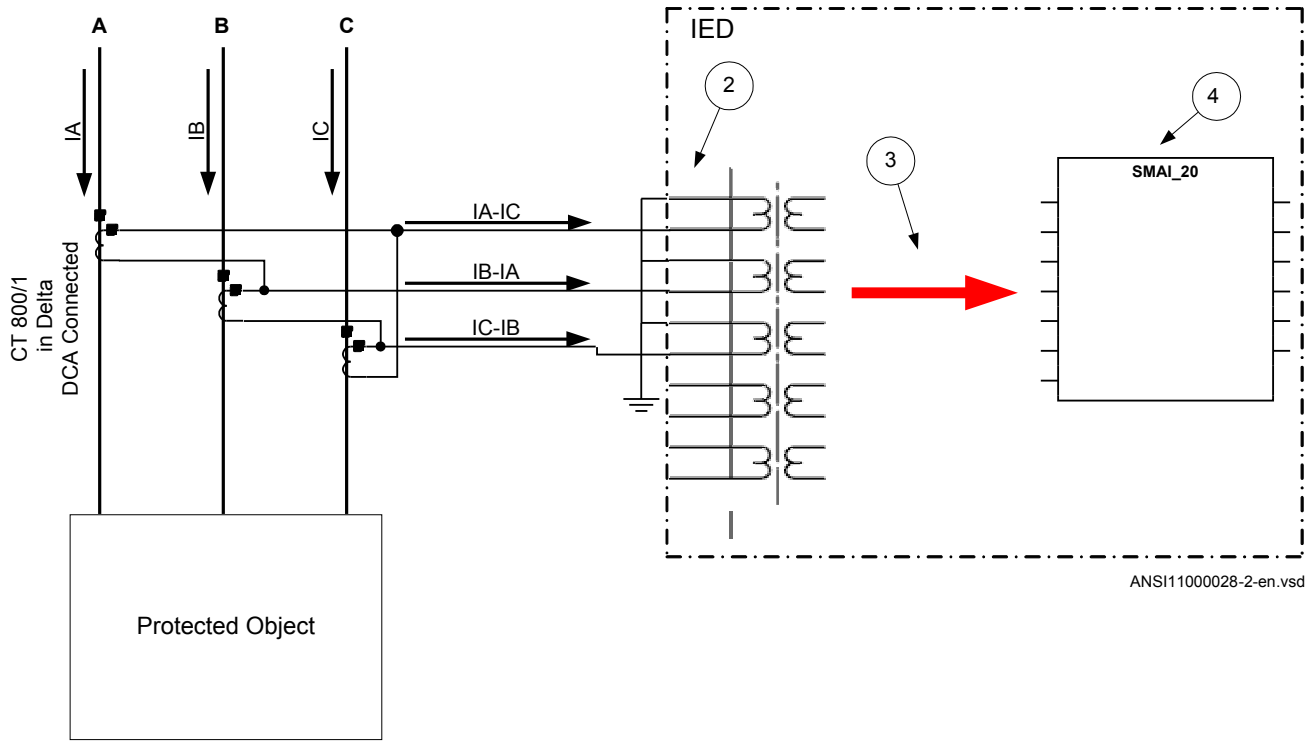

Figure 17: Delta DAC connected three-phase CT set

In this case, everything is done in a similar way as in the above described example, except that for all used current inputs on the TRM the following setting parameters shall be entered:

CT_{prim}=800A

CT_{sec}=1A

- *CTWyePoint*=ToObject
- *ConnectionType=Ph-Ph*

It is important to notice the references in SMAI. As inputs at *Ph-Ph* are expected to be A-B, B-Crespectively C-A we need to tilt 180º by setting *ToObject*.

Example how to connect single-phase CT to the IED

Figure 18 gives an example how to connect the single-phase CT to the IED. It gives an overview of the required actions by the user in order to make this measurement available to the built-in protection and control functions within the IED as well.

For correct terminal designations, see the connection diagrams valid for the delivered IED.

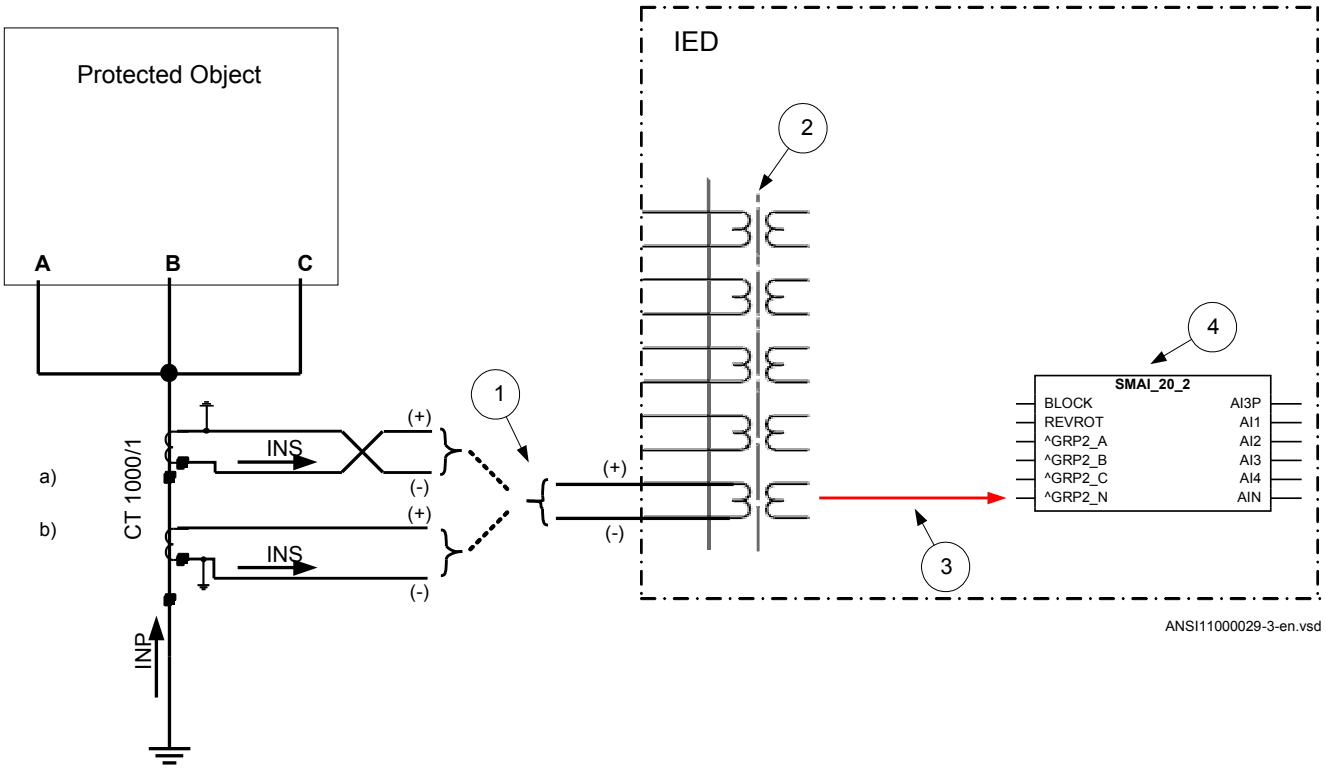

Figure 18: Connections for single-phase CT input

Where:

1) shows how to connect single-phase CT input in the IED.

2) is TRM where these current inputs are located. It shall be noted that for all these current inputs the following setting values shall be entered.
For connection (a) shown in figure 18:
*CT*prim = 1000 A
*CT*sec = 1A
CTWyePoint=ToObject

For connection (b) shown in figure 18:
*CT*prim = 1000 A
*CT*sec = 1A
CTWyePoint=FromObject

3) shows the connection made in SMT tool, which connect this CT input to the fourth input channel of the preprocessing function block 4).

4) is a Preprocessing block that has the task to digitally filter the connected analog inputs and calculate values. The calculated values are then available for all built-in protection and control functions within the IED, which are connected to this preprocessing function block.
If frequency tracking and compensation is required (this feature is typically required only for IEDs installed in the power plants) then the setting parameters *DFTReference* shall be set accordingly.

Setting of voltage channels

As the IED uses primary system quantities the main VT ratios must be known to the IED. This is done by setting the two parameters *VTsec* and *VTprim* for each voltage channel. The phase-to-phase value can be used even if each channel is connected to a phase-to-ground voltage from the VT.

Example

Consider a VT with the following data:

$$\frac{132\text{kV}}{\sqrt{3}} \Big/ \frac{120\text{V}}{\sqrt{3}}$$

(Equation 1)

The following setting should be used: *VTprim=132* (value in kV) *VTsec=120* (value in V)

Examples how to connect, configure and set VT inputs for most commonly used VT connections

Figure 19 defines the marking of voltage transformer terminals commonly used around the world.

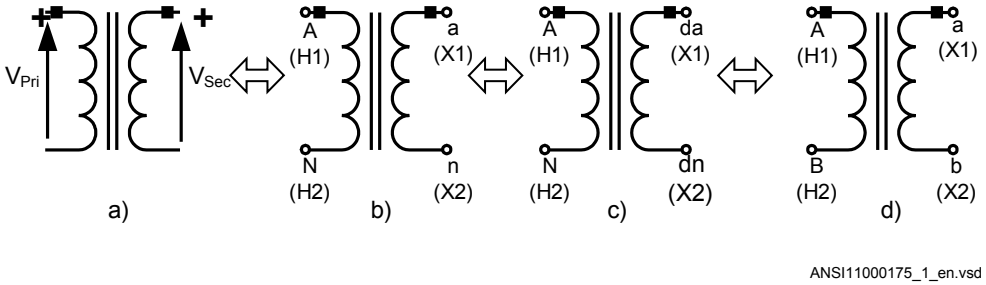

Figure 19: Commonly used markings of VT terminals

Where:

a) is the symbol and terminal marking used in this document. Terminals marked with a square indicate the primary and secondary winding terminals with the same (positive) polarity

b) is the equivalent symbol and terminal marking used by IEC (ANSI) standard for phase-to-ground connected VTs

c) is the equivalent symbol and terminal marking used by IEC (ANSI) standard for open delta connected VTs

d) is the equivalent symbol and terminal marking used by IEC (ANSI) standard for phase-to-phase connected VTs

It shall be noted that depending on national standard and utility practices the rated secondary voltage of a VT has typically one of the following values:

- 100 V
- 110 V
- 115 V
- 120 V
- 230 V

The IED fully supports all of these values and most of them will be shown in the following examples.

Examples on how to connect a three phase-to-ground connected VT to the IED

Figure 20 gives an example on how to connect the three phase-to-ground connected VT to the IED. It as well gives overview of required actions by the user in order to make this measurement available to the built-in protection and control functions within the IED.

For correct terminal designations, see the connection diagrams valid for the delivered IED.

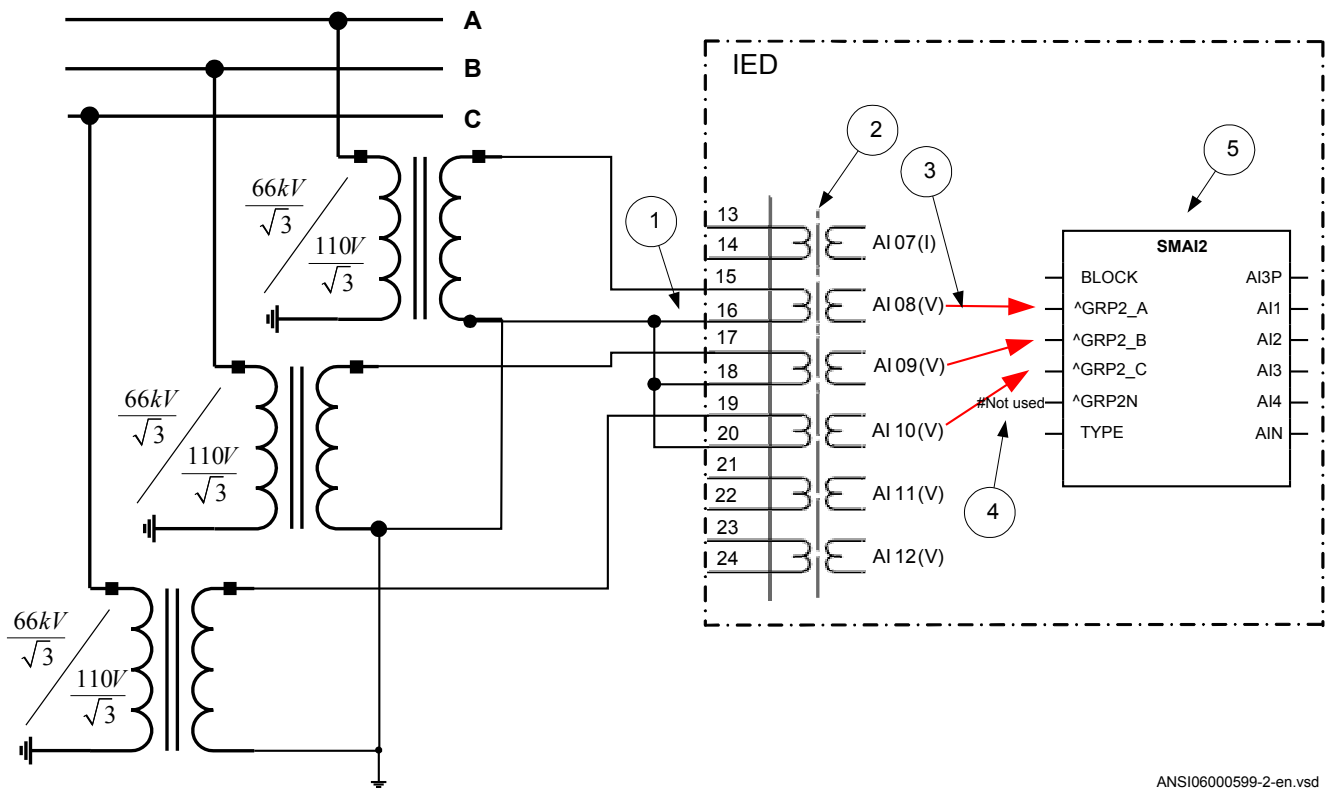

Figure 20: A Three phase-to-ground connected VT

Where:

1) shows how to connect three secondary phase-to-ground voltages to three VT inputs on the IED

2) is the TRM where these three voltage inputs are located. For these three voltage inputs, the following setting values shall be entered:
VTprim = 66 kV
VTsec = 110 V
Inside the IED, only the ratio of these two parameters is used. It shall be noted that the ratio of the entered values exactly corresponds to ratio of one individual VT.

$$\frac{66}{110} = \frac{66/\sqrt{3}}{110/\sqrt{3}}$$

(Equation 2)

Table continues on next page

3) are three connections made in Signal Matrix Tool (SMT), which connect these three voltage inputs to first three input channels of the preprocessing function block 5). Depending on the type of functions which need this voltage information, more then one preprocessing block might be connected in parallel to these three VT inputs.

4) shows that in this example the fourth (that is, residual) input channel of the preprocessing block is not connected in SMT tool. Thus the preprocessing block will automatically calculate 3Vo inside by vectorial sum from the three phase to ground voltages connected to the first three input channels of the same preprocessing block. Alternatively, the fourth input channel can be connected to open delta VT input, as shown in figure 22.

5) is a Preprocessing block that has the task to digitally filter the connected analog inputs and calculate:

- fundamental frequency phasors for all four input channels
- harmonic content for all four input channels
- positive, negative and zero sequence quantities by using the fundamental frequency phasors for the first three input channels (channel one taken as reference for sequence quantities)

These calculated values are then available for all built-in protection and control functions within the IED, which are connected to this preprocessing function block in the configuration tool. For this application most of the preprocessing settings can be left to the default values. However the following settings shall be set as shown here:
VBase=66 kV (that is, rated Ph-Ph voltage)
If frequency tracking and compensation is required (this feature is typically required only for IEDs installed in the generating stations) then the setting parameters *DFTReference* shall be set accordingly.

Example on how to connect a phase-to-phase connected VT to the IED

Figure 21 gives an example how to connect a phase-to-phase connected VT to the IED. It gives an overview of the required actions by the user in order to make this measurement available to the built-in protection and control functions within the IED as well. It shall be noted that this VT connection is only used on lower voltage levels (that is, rated primary voltage below 40 kV).

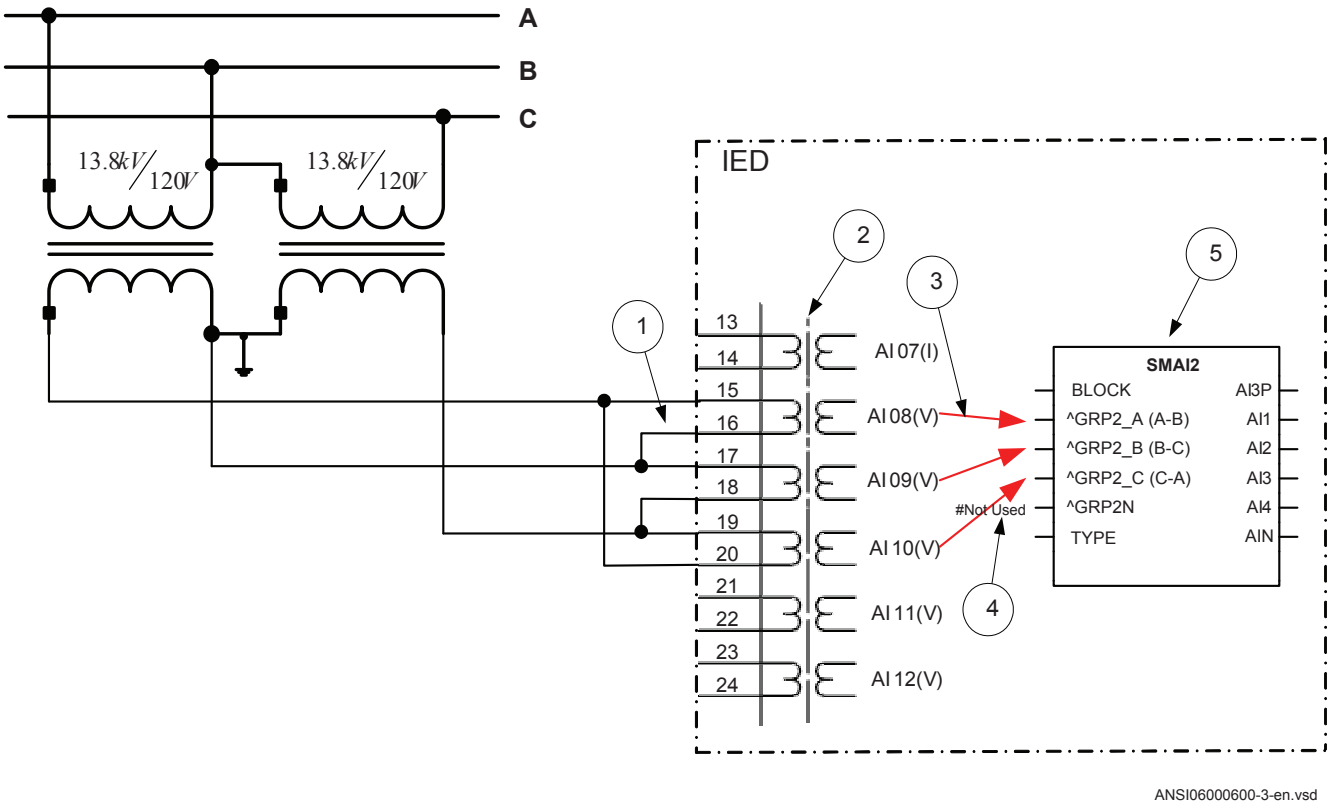

Figure 21: A Two phase-to-phase connected VT

Where:

1) shows how to connect the secondary side of a phase-to-phase VT to the VT inputs on the IED

2) is the TRM where these three voltage inputs are located. It shall be noted that for these three voltage inputs the following setting values shall be entered:
VTprim=13.8 kV
VTsec=120 V
Please note that inside the IED only ratio of these two parameters is used.

Table continues on next page

3) are three connections made in the Signal Matrix tool (SMT), Application configuration tool (ACT), which connects these three voltage inputs to first three input channels of the preprocessing function block 5). Depending on the type of functions, which need this voltage information, more than one preprocessing block might be connected in parallel to these three VT inputs

4) shows that in this example the fourth (that is, residual) input channel of the preprocessing block is not connected in SMT. Note. If the paameters V_A, V_B, V_C, V_N should be used the open delta must be connected here.

5) Preprocessing block has a task to digitally filter the connected analog inputs and calculate:

- fundamental frequency phasors for all four input channels
- harmonic content for all four input channels
- positive, negative and zero sequence quantities by using the fundamental frequency phasors for the first three input channels (channel one taken as reference for sequence quantities)

These calculated values are then available for all built-in protection and control functions within the IED, which are connected to this preprocessing function block in the configuration tool. For this application most of the preprocessing settings can be left to the default values. However the following settings shall be set as shown here:
ConnectionType=Ph-Ph
VBase=13.8 kV
If frequency tracking and compensation is required (this feature is typically required only for IEDs installed in the generating stations) then the setting parameters *DFTReference* shall be set accordingly.

Example on how to connect an open delta VT to the IED for high impedance grounded or ungrounded netwoeks

Figure 22 gives an example about the wiring of an open delta VT to the IED for high impedance grounded or ungrounded power systems. It shall be noted that this type of VT connection presents a secondary voltage proportional to 3V0 to the IED.

In case of a solid ground fault close to the VT location the primary value of 3Vo will be equal to:

$$3Vo = \sqrt{3} \cdot V_{Ph-Ph} = 3 \cdot V_{Ph-Gnd}$$

(Equation 3)

The primary rated voltage of an open Delta VT is always equal to $V_{Ph\text{-}Gnd}$. Three series connected VT secondary windings gives a secondary voltage equal to three times the individual VT secondary winding rating. Thus the secondary windings of open delta VTs quite often have a secondary rated voltage equal to one third of the rated phase-to-phase VT secondary voltage (110/3V in this particular example).

Figure 22 gives overview of required actions by the user in order to make this measurement available to the built-in protection and control functions within the IED as well.

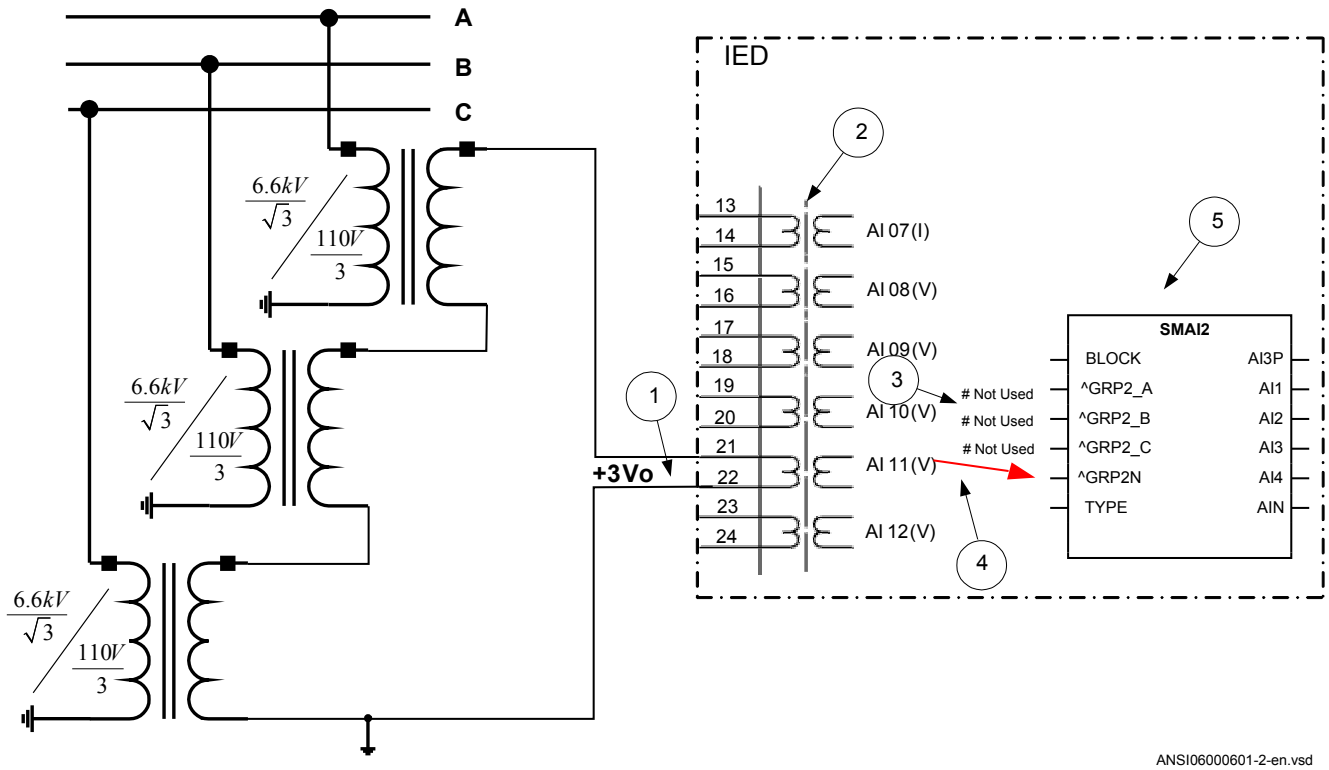

Figure 22: Open delta connected VT in high impedance grounded power system

Where:

1) shows how to connect the secondary side of the open delta VT to one VT input on the IED.

+3Vo shall be connected to the IED

2) is the TRM where this voltage input is located. It shall be noted that for this voltage input the following setting values shall be entered:

$$VTprim = \sqrt{3} \cdot 6.6 = 11.43kV$$

(Equation 4)

$$VT\sec = 3 \cdot \frac{110}{3} = 110V$$

(Equation 5)

Inside the IED, only the ratio of these two parameters is used. It shall be noted that the ratio of the entered values exactly corresponds to ratio of one individual open delta VT.

$$\frac{\sqrt{3} \cdot 6.6}{110} = \frac{6.6/\sqrt{3}}{110/3}$$

(Equation 6)

3) shows that in this example the first three input channel of the preprocessing block is not connected in SMT tool or ACT tool.

4) shows the connection made in Signal Matrix Tool (SMT), Application configuration tool (ACT), which connect this voltage input to the fourth input channel of the preprocessing function block 5).

5) is a Preprocessing block that has the task to digitally filter the connected analog input and calculate:

- fundamental frequency phasors for all four input channels
- harmonic content for all four input channels
- positive, negative and zero sequence quantities by using the fundamental frequency phasors for the first three input channels (channel one taken as reference for sequence quantities)

These calculated values are then available for all built-in protection and control functions within the IED, which are connected to this preprocessing function block in the configuration tool. For this application most of the preprocessing settings can be left to the default values.
If frequency tracking and compensation is required (this feature is typically required only for IEDs installed in the generating stations) then the setting parameters *DFTReference* shall be set accordingly.

Example how to connect the open delta VT to the IED for low impedance grounded or solidly grounded power systems

Figure 23 gives an example about the connection of an open delta VT to the IED for low impedance grounded or solidly grounded power systems. It shall be noted that this type of VT connection presents secondary voltage proportional to $3V_0$ to the IED.

In case of a solid ground fault close to the VT location the primary value of 3Vo will be equal to:

$$3Vo = \frac{V_{Ph-Ph}}{\sqrt{3}} = V_{Ph-Gnd}$$

(Equation 7)

The primary rated voltage of such VT is always equal to VPh-Gnd. Therefore, three series connected VT secondary windings will give the secondary voltage equal only to one individual VT secondary winding rating. Thus the secondary windings of such open delta VTs quite often has a secondary rated voltage close to rated phase-to-phase VT secondary voltage, that is, 115V or 115/√3V as in this particular example. Figure 23 gives an overview of the actions which are needed to make this measurement available to the built-in protection and control functions within the IED.

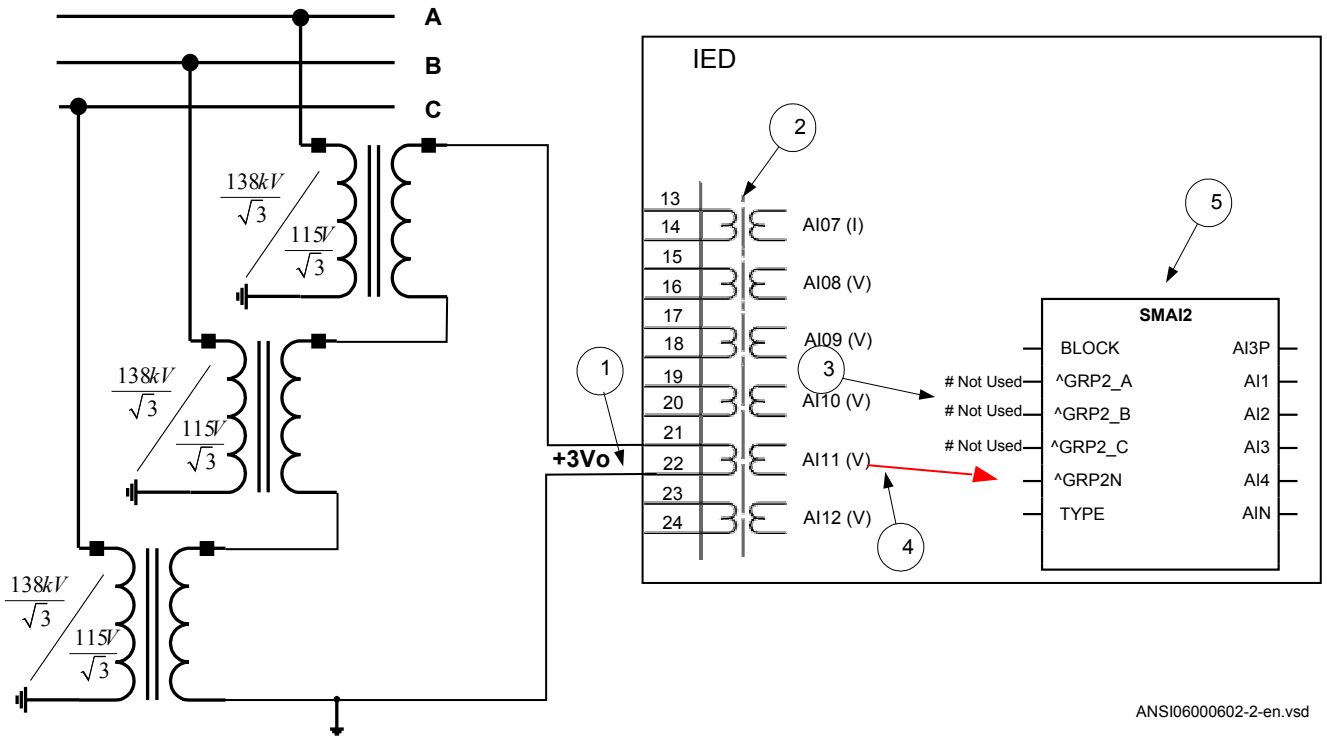

Figure 23: Open delta connected VT in low impedance or solidly grounded power system

Where:

1) shows how to connect the secondary side of open delta VT to one VT input in the IED.

+3Vo shall be connected to the IED.

2) is TRM where this voltage input is located. It shall be noted that for this voltage input the following setting values shall be entered:

$$VTprim = \sqrt{3} \cdot \frac{138}{\sqrt{3}} = 138kV$$

(Equation 8)

$$VT\sec = \sqrt{3} \cdot \frac{115}{\sqrt{3}} = 115V$$

(Equation 9)

Inside the IED, only the ratio of these two parameters is used. It shall be noted that the ratio of the entered values exactly corresponds to ratio of one individual open delta VT.

$$\frac{138}{115} = \frac{138/\sqrt{3}}{115/\sqrt{3}}$$

(Equation 10)

3) shows that in this example the first three input channel of the preprocessing block is not connected in SMT tool.

4) shows the connection made in Signal Matrix Tool (SMT), which connect this voltage input to the fourth input channel of the preprocessing function block 4).

5) preprocessing block has a task to digitally filter the connected analog inputs and calculate:

- fundamental frequency phasors for all four input channels
- harmonic content for all four input channels
- positive, negative and zero sequence quantities by using the fundamental frequency phasors for the first three input channels (channel one taken as reference for sequence quantities)

These calculated values are then available for all built-in protection and control functions within the IED, which are connected to this preprocessing function block in the configuration tool. For this application most of the preprocessing settings can be left to the default values.
If frequency tracking and compensation is required (this feature is typically required only for IEDs installed in the generating stations) then the setting parameters *DFTReference* shall be set accordingly.

Example on how to connect a neutral point VT to the IED

Figure 24 gives an example on how to connect a neutral point VT to the IED. This type of VT connection presents secondary voltage proportional to V_0 to the IED.

In case of a solid ground fault in high impedance grounded or ungrounded systems the primary value of V_0 voltage will be equal to:

$$V0 = \frac{V_{ph-ph}}{\sqrt{3}} = V_{ph-Gnd}$$

(Equation 11)

Figure 24 gives an overview of required actions by the user in order to make this measurement available to the built-in protection and control functions within the IED as well.

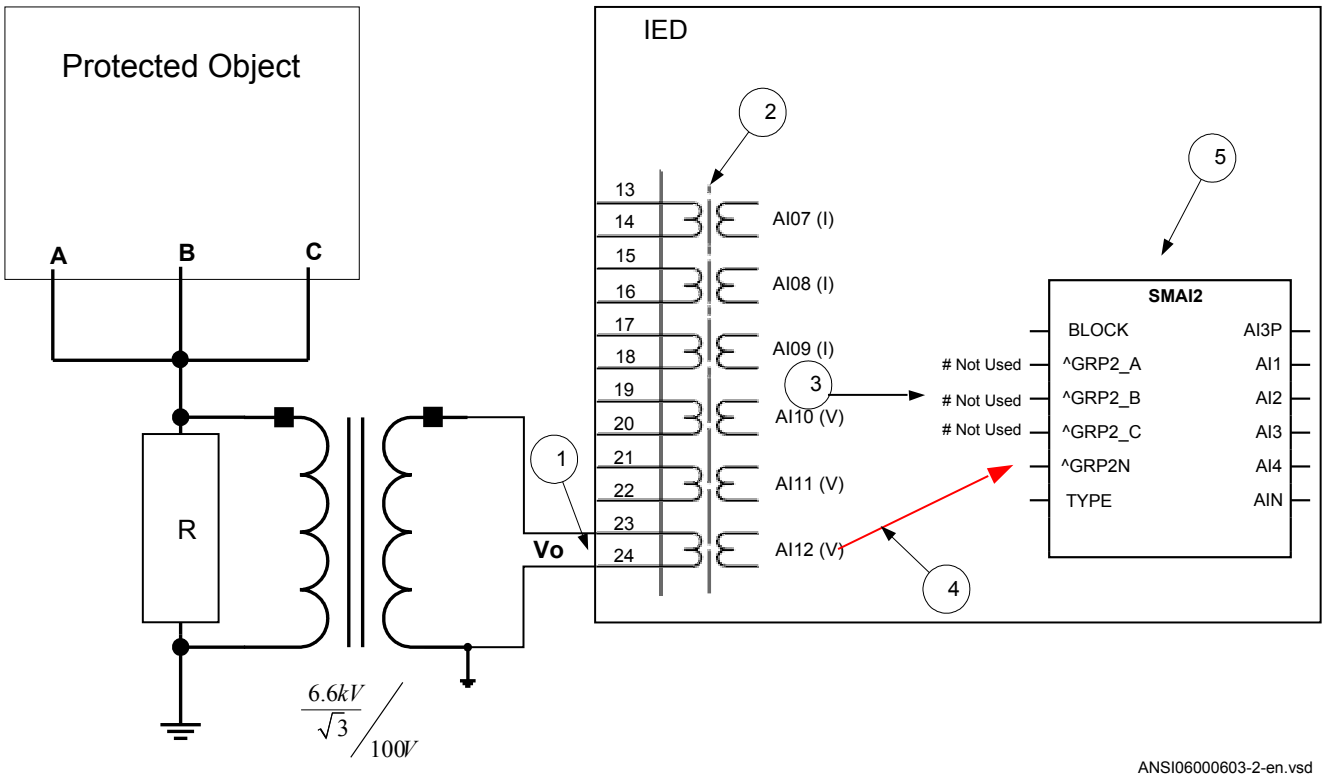

Figure 24: Neutral point connected VT

Where:

1) shows how to connect the secondary side of neutral point VT to one VT input in the IED.

V_0 shall be connected to the IED.

2) is the TRM or AIM where this voltage input is located. For this voltage input the following setting values shall be entered:

$$VTprim = \frac{6.6}{\sqrt{3}} = 3.81kV$$

(Equation 12)

$$VT\sec = 100V$$

(Equation 13)

Inside the IED, only the ratio of these two parameters is used. It shall be noted that the ratio of the entered values exactly corresponds to ratio of the neutral point VT.

3) shows that in this example the first three input channel of the preprocessing block is not connected in SMT tool or ACT tool.

4) shows the connection made in Signal Matrix Tool (SMT), Application configuration tool (ACT), which connects this voltage input to the fourth input channel of the preprocessing function block 5).

5) is a preprocessing block that has the task to digitally filter the connected analog inputs and calculate:

- fundamental frequency phasors for all four input channels
- harmonic content for all four input channels
- positive, negative and zero sequence quantities by using the fundamental frequency phasors for the first three input channels (channel one taken as reference for sequence quantities)

These calculated values are then available for all built-in protection and control functions within the IED, which are connected to this preprocessing function block in the configuration tool. For this application most of the preprocessing settings can be left to the default values.
If frequency tracking and compensation is required (this feature is typically required only for IEDs installed in the generating stations) then the setting parameters *DFTReference* shall be set accordingly.

Section 5 Local HMI

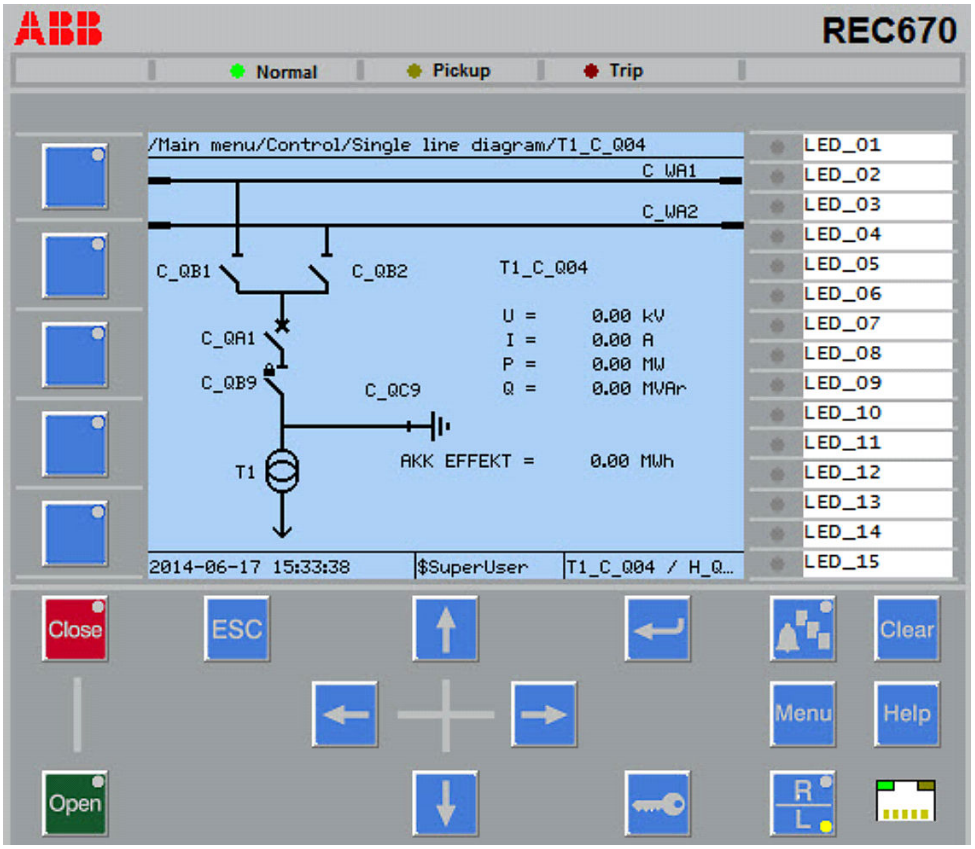

ANSI13000239-1-en.vsd

Figure 25: Local human-machine interface

The LHMI of the IED contains the following elements:

- Display (LCD)
- Buttons
- LED indicators
- Communication port for PCM600

The LHMI is used for setting, monitoring and controlling.

5.1 Display

The LHMI includes a graphical monochrome liquid crystal display (LCD) with a resolution of 320 x 240 pixels. The character size can vary.

The display view is divided into four basic areas.

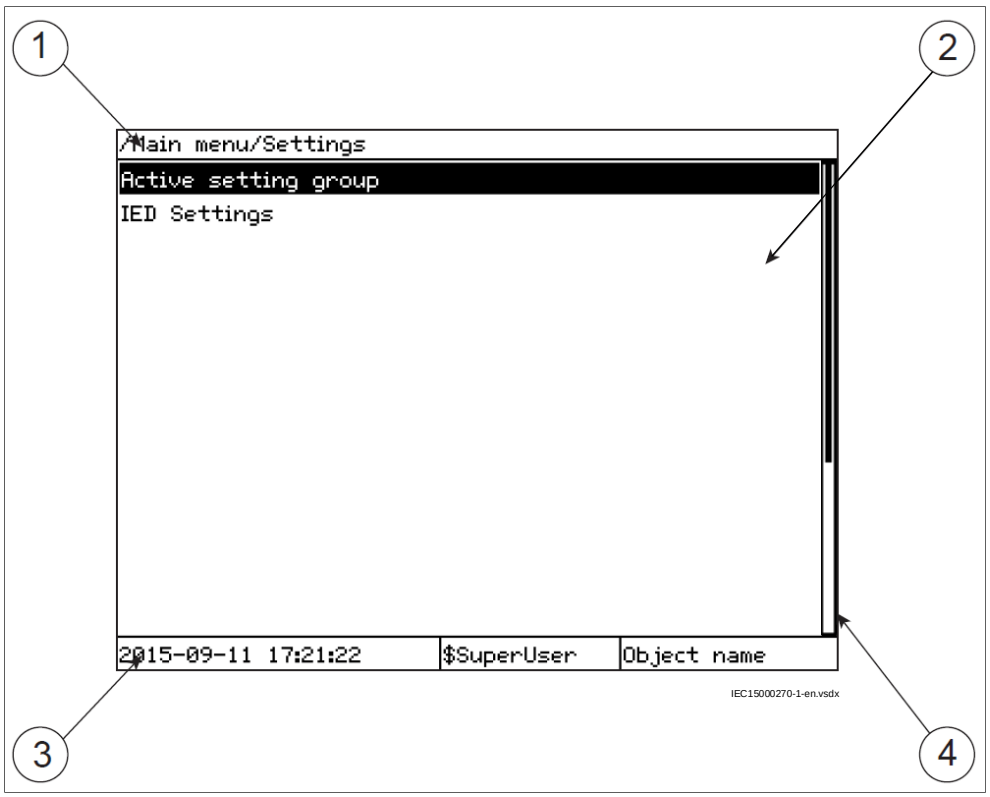

Figure 26: Display layout

1 Path
2 Content
3 Status
4 Scroll bar (appears when needed)

The function key button panel shows on request what actions are possible with the function buttons. Each function button has a LED indication that can be used as a feedback

signal for the function button control action. The LED is connected to the required signal with PCM600.

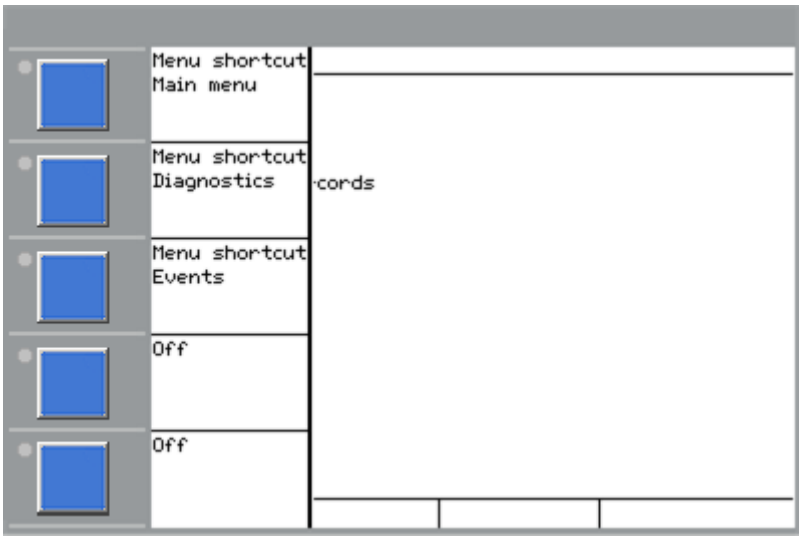

IEC13000281-1-en.vsd

Figure 27: Function button panel

The indication LED panel shows on request the alarm text labels for the indication LEDs. Three indication LED pages are available.

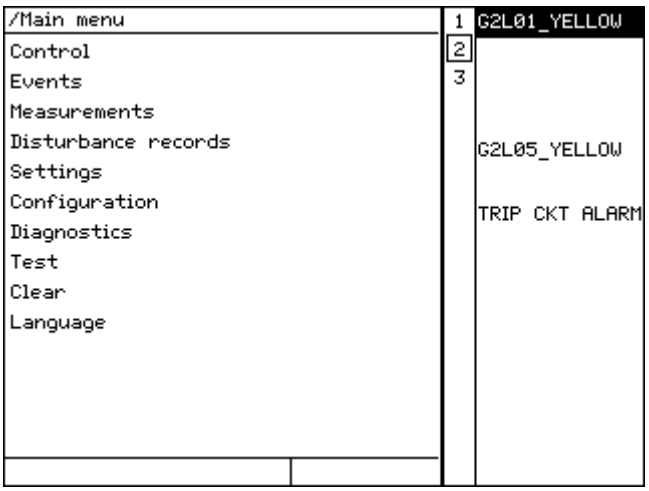

IEC13000240-1-en.vsd

Figure 28: Indication LED panel

The function button and indication LED panels are not visible at the same time. Each panel is shown by pressing one of the function buttons or the Multipage button. Pressing the

ESC button clears the panel from the display. Both panels have a dynamic width that depends on the label string length.

5.2 LEDs

The LHMI includes three protection status LEDs above the display: Normal, Pickup and Trip.

There are 15 programmable alarm LEDs on the front of the LHMI. Each LED can indicate three states with the colors: green, yellow and red. The alarm texts related to each three-color LED are divided into three pages.

There are 3 separate pages of LEDs available. The 15 physical three-color LEDs in one LED group can indicate 45 different signals. Altogether, 135 signals can be indicated since there are three LED groups. The LEDs are lit according to priority, with red being the highest and green the lowest priority. For example, if on one page there is an indication that requires the green LED to be lit, and on another page there is an indication that requires the red LED to be lit, the red LED takes priority and is lit. The LEDs can be configured with PCM600 and the operation mode can be selected with the LHMI or PCM600.

Information pages for the alarm LEDs are shown by pressing the Multipage button. Pressing that button cycles through the three pages. A lit or un-acknowledged LED is indicated with a highlight. Such lines can be selected by using the Up / Down arrow buttons. Pressing the Enter key shows details about the selected LED. Pressing the ESC button exits from information pop-ups as well as from the LED panel as such.

The Multipage button has a LED. This LED is lit whenever any LED on any page is lit. If there are un-acknowledged alarm LEDs, then the Multipage LED blinks. To acknowledge LEDs, press the Clear button to enter the Reset menu (refer to description of this menu for details).

There are two additional LEDs which are next to the control buttons 

and 

. They represent the status of the circuit breaker.

5.3 Keypad

The LHMI keypad contains push-buttons which are used to navigate in different views or menus. The push-buttons are also used to acknowledge alarms, reset indications, provide help and switch between local and remote control mode.

The keypad also contains programmable push-buttons that can be configured either as menu shortcut or control buttons.

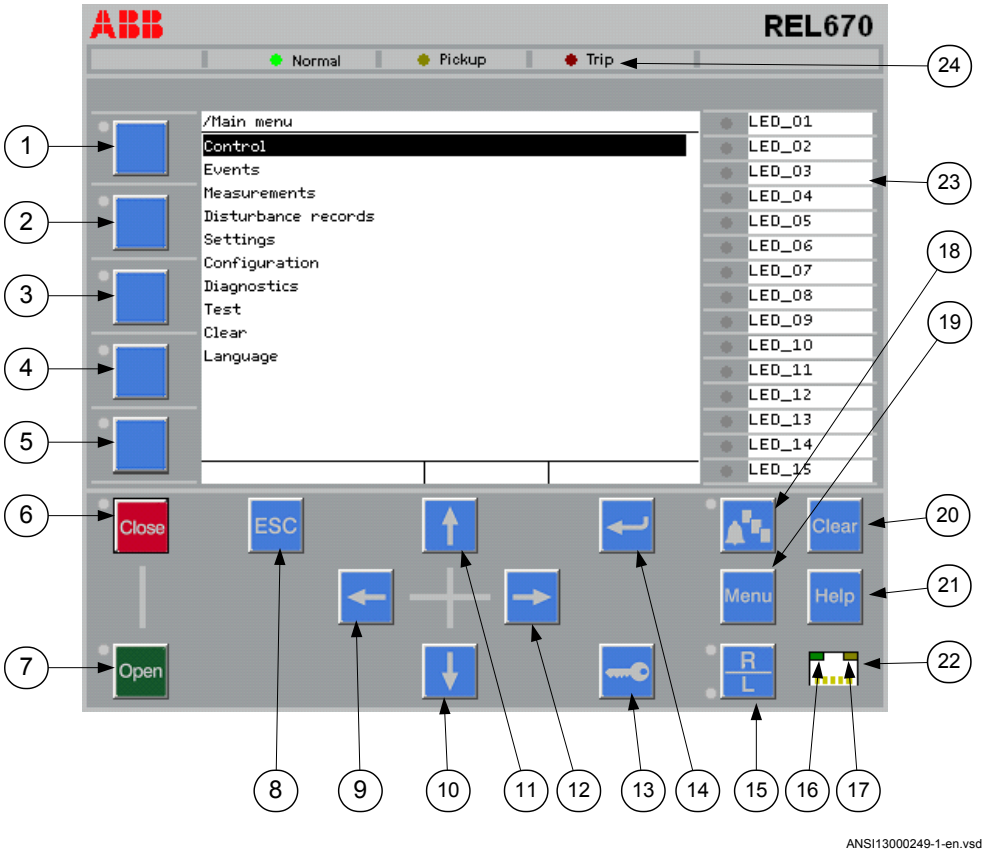

Figure 29: LHMI keypad with object control, navigation and command push-buttons and RJ-45 communication port

1...5	Function button
6	Close
7	Open
8	Escape
9	Left
10	Down
11	Up
12	Right
13	Key
14	Enter
15	Remote/Local
16	Uplink LED
17	Not in use
18	Multipage
19	Menu

20 Clear
21 Help
22 Communication port
23 Programmable alarm LEDs
24 Protection status LEDs

5.4 Local HMI functionality

5.4.1 Protection and alarm indication

Protection indicators

The protection indicator LEDs are Normal, Pickup and Trip.

Table 6: Normal LED (green)

LED state	Description
Off	Auxiliary supply voltage is disconnected.
On	Normal operation.
Flashing	Internal fault has occurred.

Table 7: PickUp LED (yellow)

LED state	Description
Off	Normal operation.
On	A protection function has picked up and an indication message is displayed. The pick up indication is latching and must be reset via communication, LHMI or binary input on the LEDGEN component. To open the reset menu on the LHMI, press Clear.
Flashing	The IED is in test mode and protection functions are blocked, or the IEC61850 protocol is blocking one or more functions. The indication disappears when the IED is no longer in test mode and blocking is removed. The blocking of functions through the IEC61850 protocol can be reset in **Main menu/Test/Reset IEC61850 Mod**. The yellow LED changes to either On or Off state depending on the state of operation.

Table 8: Trip LED (red)

LED state	Description
Off	Normal operation.
On	A protection function has tripped. An indication message is displayed if the auto-indication feature is enabled in the local HMI. The trip indication is latching and must be reset via communication, LHMI or binary input on the LEDGEN component. To open the reset menu on the LHMI, press Clear.

Alarm indicators

The 15 programmable three-color LEDs are used for alarm indication. An individual alarm/status signal, connected to any of the LED function blocks, can be assigned to one of the three LED colors when configuring the IED.

Table 9: Alarm indications

LED state	Description
Off	Normal operation. All activation signals are off.
On	• Follow-S sequence: The activation signal is on. • LatchedColl-S sequence: The activation signal is on, or it is off but the indication has not been acknowledged. • LatchedAck-F-S sequence: The indication has been acknowledged, but the activation signal is still on. • LatchedAck-S-F sequence: The activation signal is on, or it is off but the indication has not been acknowledged. • LatchedReset-S sequence: The activation signal is on, or it is off but the indication has not been acknowledged.
Flashing	• Follow-F sequence: The activation signal is on. • LatchedAck-F-S sequence: The activation signal is on, or it is off but the indication has not been acknowledged. • LatchedAck-S-F sequence: The indication has been acknowledged, but the activation signal is still on.

5.4.2 Parameter management

The LHMI is used to access the IED parameters. Three types of parameters can be read and written.

- Numerical values
- String values
- Enumerated values

Numerical values are presented either in integer or in decimal format with minimum and maximum values. Character strings can be edited character by character. Enumerated values have a predefined set of selectable values.

5.4.3 Front communication

The RJ-45 port in the LHMI enables front communication.

- The green uplink LED on the left is lit when the cable is successfully connected to the port.
- The yellow LED is not used; it is always off.

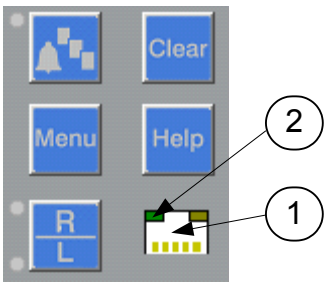

IEC13000280-1-en.vsd

Figure 30: RJ-45 communication port and green indicator LED

1 RJ-45 connector
2 Green indicator LED

The default IP address for the IED front port is 10.1.150.3 and the corresponding subnetwork mask is 255.255.255.0. It can be set through the local HMI path **Main menu/ Configuration/Communication/Ethernet configuration/FRONT:1**.

Do not connect the IED front port to a LAN. Connect only a single local PC with PCM600 to the front port. It is only intended for temporary use, such as commissioning and testing.

Section 6 Differential protection

6.1 1Ph High impedance differential protection HZPDIF (87)

6.1.1 Identification

Function description	IEC 61850 identification	IEC 60617 identification	ANSI/IEEE C37.2 device number
1Ph High impedance differential protection	HZPDIF	*Id*	87

6.1.2 Application

The 1Ph High impedance differential protection function HZPDIF (87) can be used as:

- Generator differential protection
- Reactor differential protection
- Busbar differential protection
- Autotransformer differential protection (for common and serial windings only)
- T-feeder differential protection
- Capacitor differential protection
- Restricted ground fault protection for transformer, generator and shunt reactor windings
- Restricted ground fault protection

The application is dependent on the primary system arrangements and location of breakers, available CT cores and so on.

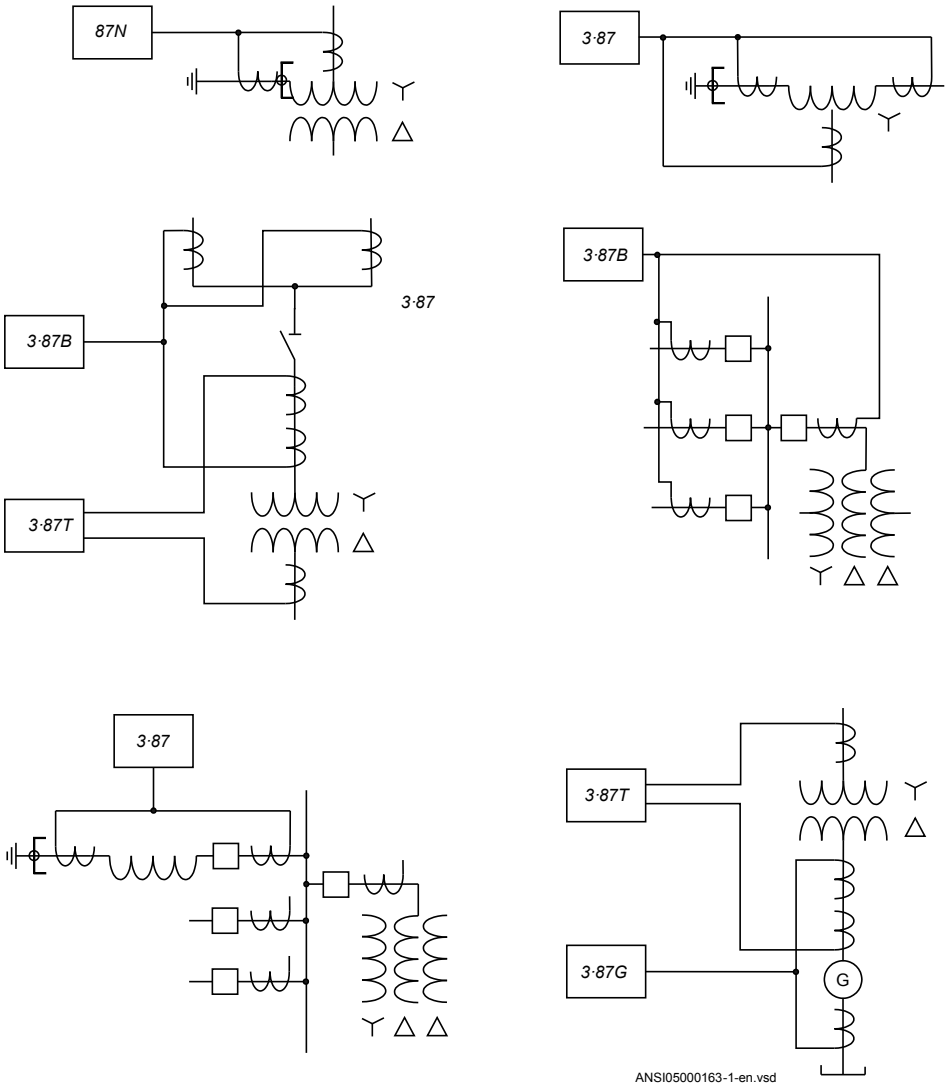
87N
3·87
3·87B
3·87
3·87T
3·87B
3·87
3·87T
3·87G
G
ANSI05000163-1-en.vsd

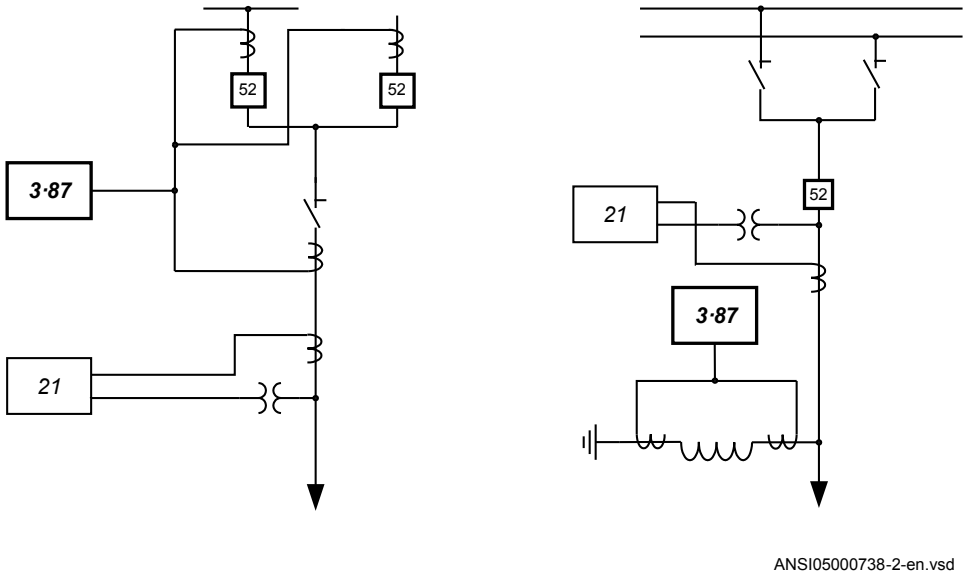

Figure 31: Different applications of a 1Ph High impedance differential protection HZPDIF (87) function

6.1.2.1 The basics of the high impedance principle

The high impedance differential protection principle has been used for many years and is well documented in literature publicly available. Its operating principle provides very good sensitivity and high speed operation. One main benefit offered by the principle is an absolute stability (that is, no operation) for external faults even in the presence of heavy CT saturation. The principle is based on the CT secondary current circulating between involved current transformers and not through the IED due to high impedance in the measuring branch. This stabilizing resistance is in the range of hundreds of ohms and sometimes above one kilo Ohm. When an internal fault occurs the current cannot circulate and is forced through the measuring branch causing relay operation.

It should be remembered that the whole scheme, its built-in components and wiring must be adequately maintained throughout the lifetime of the equipment in order to be able to withstand the high voltage peaks (that is, pulses) which may appear during an internal fault. Otherwise any flash-over in CT secondary circuits or any other part of the scheme may prevent correct operation of the high impedance differential relay for an actual internal fault.

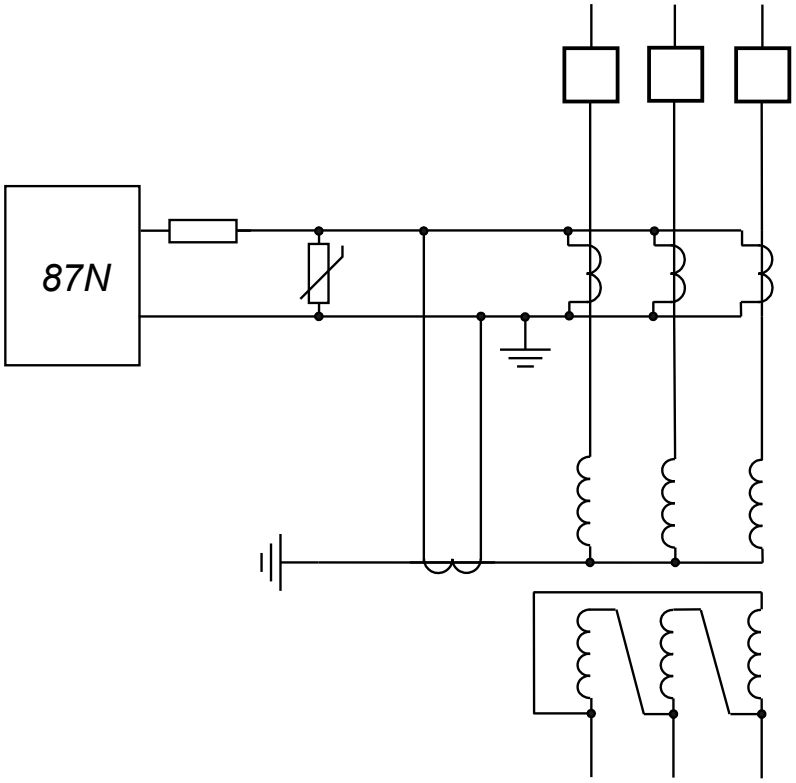

en05000164_ansi.vsd

Figure 32: Example for the high impedance restricted earth fault protection application

For a through fault one current transformer might saturate when the other CTs still will feed current. For such a case a voltage will be developed across the measuring branch. The calculations are made with the worst situations in mind and a minimum operating voltage V_R is calculated according to equation 14

$$VR > IF\max \cdot \left(Rct + Rl \right)$$

(Equation 14)

where:

*IF*max	is the maximum through fault current at the secondary side of the CT
Rct	is the current transformer secondary winding resistance and
Rl	is the maximum loop resistance of the circuit at any CT.

The minimum operating voltage has to be calculated (all loops) and the IED function is set higher than the highest achieved value (setting *TripPickup*). As the loop resistance is the value to the connection point from each CT, it is advisable to do all the CT core summations in the switchgear to have shortest possible loops. This will give lower setting values and also a better balanced scheme. The connection in to the control room can then be from the most central bay.

For an internal fault, all involved CTs will try to feed current through the measuring branch. Depending on the size of current transformer, relatively high voltages will be developed across the series resistor. Note that very high peak voltages can appear. To prevent the risk of flashover in the circuit, a voltage limiter must be included. The voltage limiter is a voltage dependent resistor (Metrosil).

The external unit with stabilizing resistor has a value of either 6800 ohms or 1800 ohms (depending on ordered alternative) with a sliding link to allow adjustment to the required value. Select a suitable value of the resistor based on the VR voltage calculated. A higher resistance value will give a higher sensitivity and a lower value a lower sensitivity of the relay.

The function has a recommended operating current range 40 mA to 1.0A for 1 A inputs and 200 mA to 5A for 5A inputs. This, together with the selected and set value, is used to calculate the required value of current at the set *TripPickup* and *R series* values.

The CT inputs used for 1Ph High impedance differential protection HZPDIF (87) function, shall be set to have ratio 1:1. So the parameters CT_{secx} and CT_{primx} of the relevant channel x of TRM and/or AIM shall be set equal to 1 A by PST in PCM600; The parameter *CTStarPointx* may be set to *ToObject*.

The tables 10, 11 below show, the operating currents for different settings of operating voltages and selected resistances. Adjust as required based on tables 10, 11 or to values in between as required for the application.

Minimum ohms can be difficult to adjust due to the small value compared to the total value.

Normally the voltage can be increased to higher values than the calculated minimum *TripPickup* with a minor change of total operating values as long as this is done by adjusting the resistor to a higher value. Check the sensitivity calculation below for reference.

Table 10: 1 A channels: input with minimum operating down to 20 mA

Operating voltage *TripPickup*	Stabilizing resistor R ohms	Operating current level 1 A	Stabilizing resistor R ohms	Operating current level 1 A	Stabilizing resistor R ohms	Operating current level 1 A
20 V	1000	0.020 A	--	--	--	--
40 V	2000	0.020 A	1000	0.040 A	--	--
60 V	3000	0.020 A	1500	0.040 A	600	0.100 A
80 V	4000	0.020 A	2000	0.040 A	800	0.100 A
100 V	5000	0.020 A	2500	0.040 A	1000	0.100 A
150 V	6000	0.020 A	3750	0.040 A	1500	0.100 A
200 V	6800	0.029 A	5000	0.040 A	2000	0.100 A

Table 11: 5 A channels: input with minimum operating down to 100 mA

Operating voltage *TripPickup*	Stabilizing resistor R1 ohms	Operating current level 5 A	Stabilizing resistor R1 ohms	Operating current level 5 A	Stabilizing resistor R1 ohms	Operating current level 5 A
20 V	200	0.100 A	100	0.200 A	--	--
40 V	400	0.100 A	200	0.200 A	100	0.400
60 V	600	0.100 A	300	0.200 A	150	0.400 A
80 V	800	0.100 A	400	0.200 A	200	0.400 A
100 V	1000	0.100 A	500	0.200 A	250	0.400 A
150 V	1500	0.100 A	750	0.200 A	375	0.400 A
200 V	2000	0.100 A	1000	0.200 A	500	0.400 A

The current transformer saturation voltage must be at least 2 x *TripPickup* to have sufficient operating margin. This must be checked after calculation of *TripPickup*.

When the R value has been selected and the *TripPickup* value has been set, the sensitivity of the scheme *IP* can be calculated. The IED sensitivity is decided by the total current in the circuit according to equation 15.

$$IP = n \cdot (IR + Ires + \sum lmag)$$

(Equation 15)

where:

n is the CT ratio

IP primary current at IED pickup,

Table continues on next page

IR	IED pickup current (U>Trip/SeriesResistor)
Ires	is the current through the voltage limiter and
ΣImag	is the sum of the magnetizing currents from all CTs in the circuit (for example, 4 for restricted earth fault protection, 2 for reactor differential protection, 3-5 for autotransformer differential protection).

It should be remembered that the vectorial sum of the currents must be used (IEDs, Metrosil and resistor currents are resistive). The current measurement is insensitive to DC component in fault current to allow the use of only the AC components of the fault current in the above calculations.

The voltage dependent resistor (Metrosil) characteristic is shown in Figure 38.

Series resistor thermal capacity

The series resistor is dimensioned for 200 W. Care shall be exercised while testing to ensure that if current needs to be injected continuously or for a significant duration of time, check that the heat dissipation Vxxx Series Resistance value does not exceed 200 W. Otherwise injection time shall be reduced to the minimum.

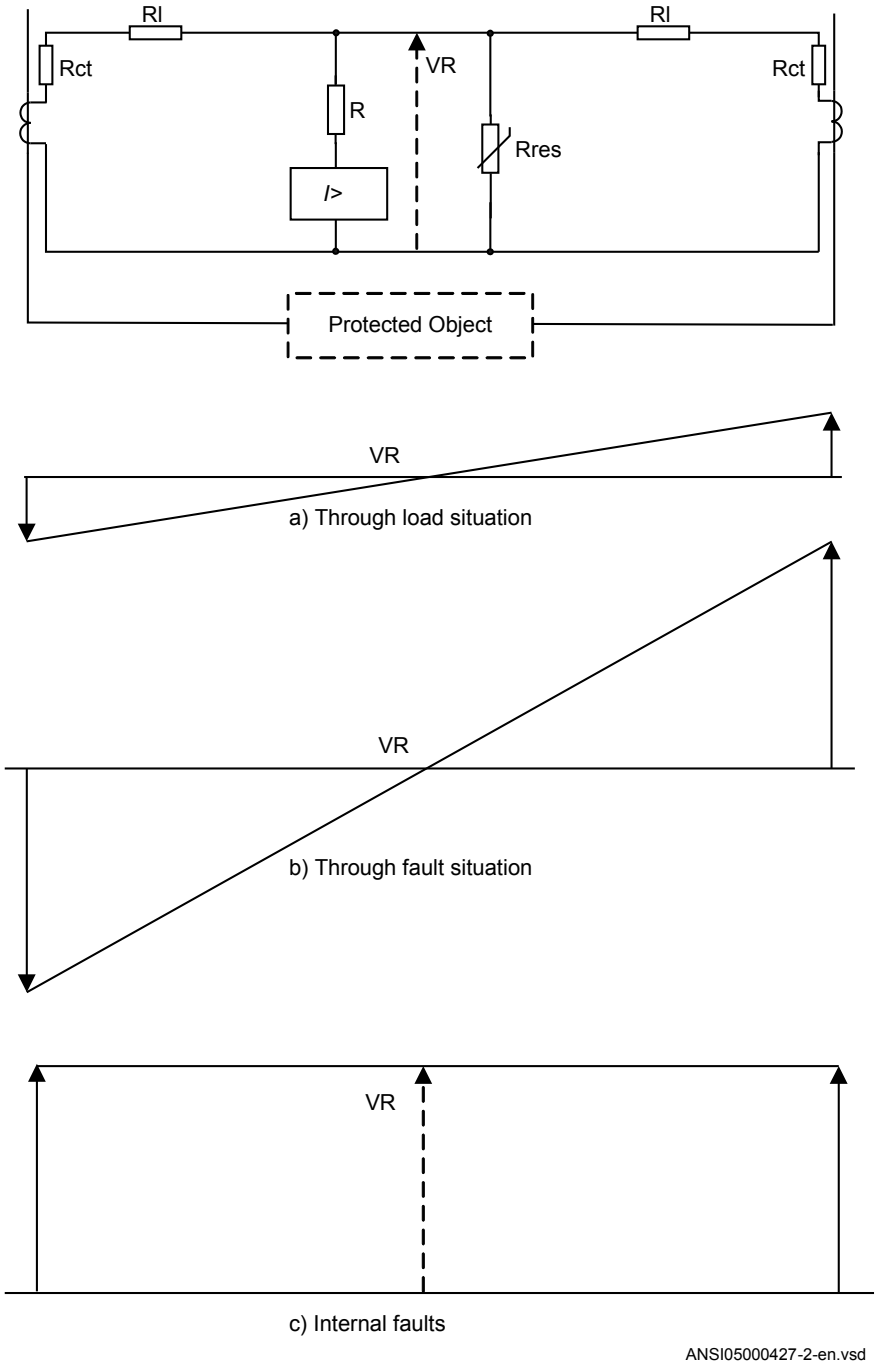

Figure 33: The high impedance principle for one phase with two current transformer inputs

6.1.3 Connection examples for high impedance differential protection

WARNING! USE EXTREME CAUTION! Dangerously high voltages might be present on this equipment, especially on the plate with resistors. De-energize the primary object protected with this equipment before connecting or disconnecting wiring or performing any maintenance. The plate with resistors should be provided with a protective cover, mounted in a separate box or in a locked cubicle. National law and standards shall be followed.

6.1.3.1 Connections for three-phase high impedance differential protection

Generator, reactor or busbar differential protection is a typical application for three-phase high impedance differential protection. Typical CT connections for three-phase high impedance differential protection scheme are shown in figure 34.

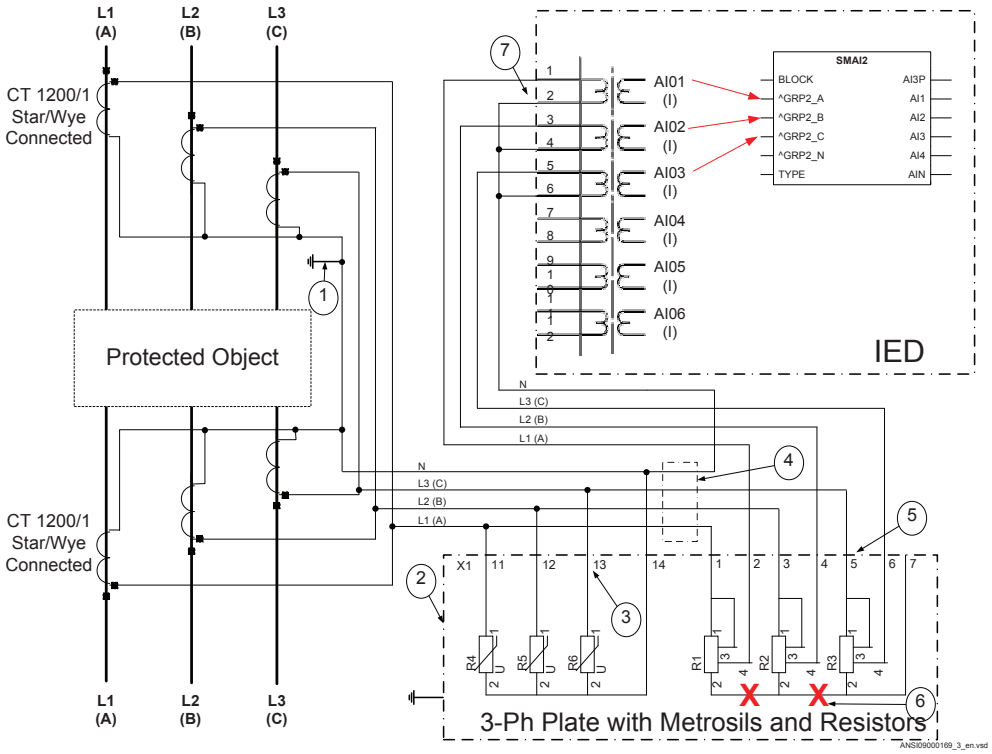

Figure 34: CT connections for high impedance differential protection

Pos	Description
1	Scheme grounding point

Note that it is of outmost importance to insure that only one grounding point exist in such scheme.

2	Three-phase plate with setting resistors and metrosils. Grounding (PE), protective ground is a separate 4 mm screw terminal on the plate.
3	Necessary connection for three-phase metrosil set.
4	Position of optional test switch for secondary injection into the high impedance differential IED.
5	Necessary connection for setting resistors.
6	The factory made star point on a three-phase setting resistor set.

Shall be removed for installations with 650 and 670 series IEDs. This star point is required for RADHA schemes only.

7	How to connect three individual phase currents for high impedance scheme to three CT inputs in the IED.

6.1.3.2 Connections for 1Ph High impedance differential protection HZPDIF (87)

Restricted earth fault protection REFPDIF (87N) is a typical application for 1Ph High impedance differential protection HZPDIF (87). Typical CT connections for high impedance based REFPDIF (87N) protection scheme are shown in figure 35.

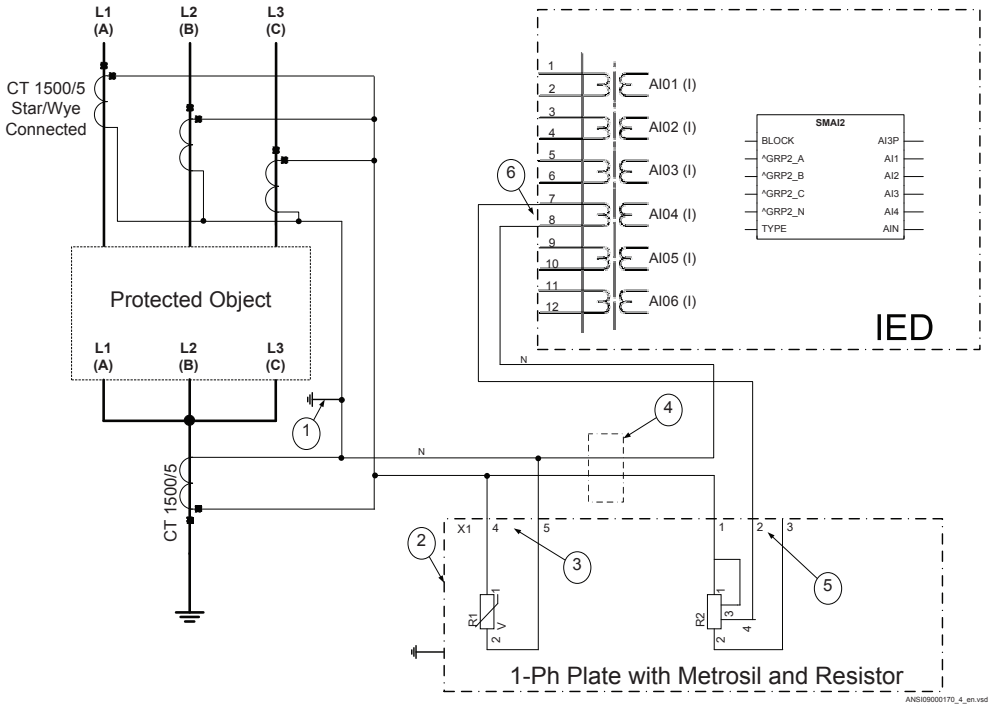

Figure 35: CT connections for restricted earth fault protection

Pos	Description
1	Scheme grounding point

Note that it is of outmost importance to insure that only one grounding point exist in such scheme.

2	One-phase plate with stabilizing resistor and metrosil. Grounding (PE), protective ground is a separate 4 mm screw terminal on the plate.
3	Necessary connection for the metrosil.
4	Position of optional test switch for secondary injection into the high impedance differential IED.
5	Necessary connection for stabilizing resistor.
6	How to connect REFPDIF (87N) high impedance scheme to one CT input in IED.

6.1.4 Setting guidelines

The setting calculations are individual for each application. Refer to the different application descriptions below.

6.1.4.1 Configuration

The configuration is done in the Application Configuration tool.

6.1.4.2 Settings of protection function

Operation: The operation of the high impedance differential function can be switched *Enabled* or *Disabled*.

AlarmPickup: Set the alarm level. The sensitivity can roughly be calculated as a certain percentage of the selected Trip level. A typical setting is 10% of *TripPickup.* This alarm stage can be used for scheme CT supervision.

tAlarm: Set the time delay for the alarm. A typical setting is 2-3 seconds.

TripPickup: Set the trip level according to the calculations (see examples below for a guidance). The level is selected with margin to the calculated required voltage to achieve stability. Values can be within 20V - 400V range dependent on the application.

R series: Set the value of the used stabilizing series resistor. Calculate the value according to the examples for each application. Adjust the resistor as close as possible to the calculated value. Measure the value achieved and set this value for this parameter.

The value shall always be high impedance. This means for example, for 1A circuits say bigger than 400 ohms (400 VA) and for 5 A circuits say bigger than 100 ohms (2500 VA). This ensures that the current will circulate and not go through the differential circuit at through faults.

That the settings of U>Alarm, U>Trip and SeriesResistor must be chosen such that both U>Alarm/SeriesResistor and U>Trip/SeriesResistor are >4% of IRated of the used current input. Normally the settings shall also be such that U>Alarm/SeriesResistor and U>Trip/SeriesResistor both gives a value <4*IRated of the used current input. If not, the limitation in how long time the actual current is allowed to persist not to overload the current input must be considered especially during the secondary testing.

6.1.4.3 T-feeder protection

In many busbar arrangements such as breaker-and-a-half, ring breaker, mesh corner, there will be a T-feeder from the current transformer at the breakers up to the current transformers in the feeder circuit (for example, in the transformer bushings). It is often required to separate the protection zones that the feeder is protected with one scheme

while the T-zone is protected with a separate differential protection scheme. The 1Ph high impedance differential HZPDIF (87) function in the IED allows this to be done efficiently, see Figure 36.

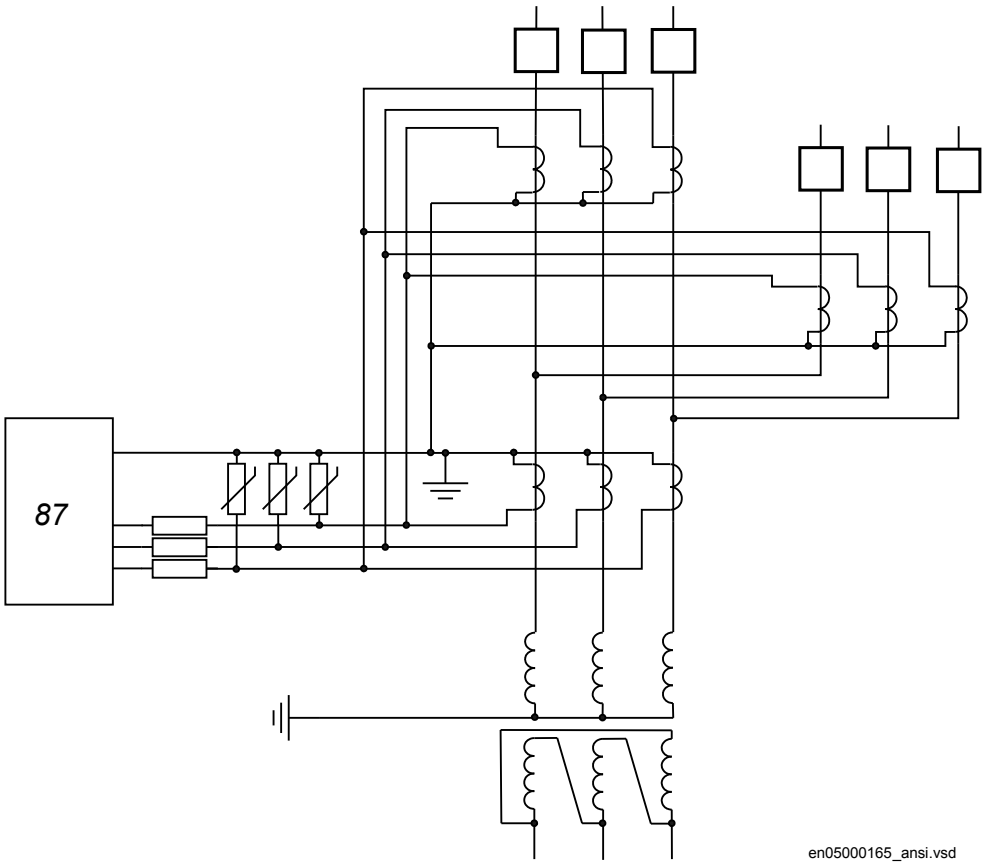
87
en05000165_ansi.vsd

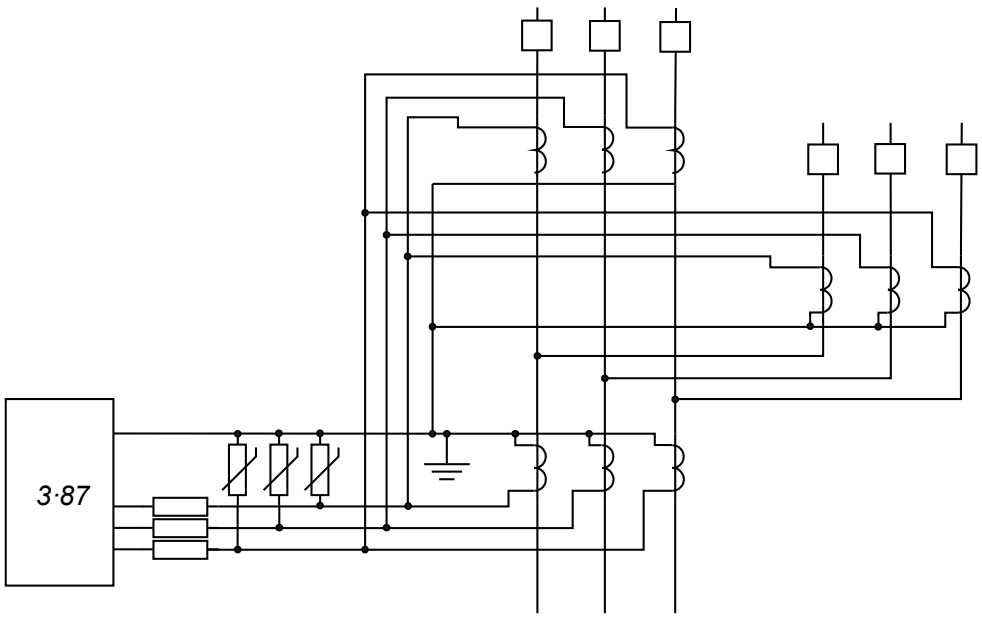
3·87
ANSI05000739-2-en.vsd

Figure 36: The protection scheme utilizing the high impedance function for the T-feeder

Normally this scheme is set to achieve a sensitivity of around 20 percent of the used CT primary rating so that a low ohmic value can be used for the series resistor.

It is strongly recommended to use the highest tap of the CT whenever high impedance protection is used. This helps in utilizing maximum CT capability, minimize the secondary fault current, thereby reducing the stability voltage limit. Another factor is that during internal faults, the voltage developed across the selected tap is limited by the non-linear resistor but in the unused taps, owing to auto-transformer action, voltages induced may be much higher than design limits.

Setting example

Basic data:	
Current transformer ratio:	2000/5A
CT Class:	C800 (At max tap of 2000/5A)
Secondary resistance:	0.5 Ohm (2000/5A tap)
Cable loop resistance:	2
Max fault current:	Equal to switchgear rated fault current 40 kA

Calculation:

$$VR > \frac{40000}{400} \cdot (0.5 + 0.4) = 90V$$

(Equation 16)

Select a setting of *TripPickup*=100 V.

The current transformer saturation voltage must be at least twice the set operating voltage *TripPickup*.

$$VkneeANSI > (0.5 + 8) \cdot 100 * 0.7 = 595V$$

(Equation 17)

that is, bigger than 2 x *TripPickup*

Check from the table of selected resistances the required series stabilizing resistor value to use. As this application requires to be so sensitive select *R Series*= 500 ohm, which gives an IED operating current of 200 mA.

Calculate the primary sensitivity at operating voltage using the following equation.

$$IP = \frac{2000}{5}\left(200\underline{|0°} + 3 \cdot 50\underline{|-60°}\right) \cdot 10^{-3} \leq approx.100A$$

(Equation 18)

where

100 mA is the current drawn by the IED circuit and

10 mA is the current drawn by each CT just at pickup

20 mA is current drawn by metrosil at pickup

The magnetizing current is taken from the magnetizing curve for the current transformer cores which should be available. The current value at *TripPickup* is taken.

It can clearly be seen that the sensitivity is not so much influenced by the selected voltage level so a sufficient margin should be used. The selection of the stabilizing resistor and the level of the magnetizing current (mostly dependent of the number of turns) are the most important factors.

6.1.4.4 Tertiary reactor protection

Reactive power equipment (for example shunt reactors and/or shunt capacitors) can be connected to the tertiary winding of the power transformers. The 1Ph High impedance differential protection function HZPDIF (87) can be used to protect the tertiary reactor for phase faults as well as ground faults if the power system of the tertiary winding is direct or low impedance grounded.

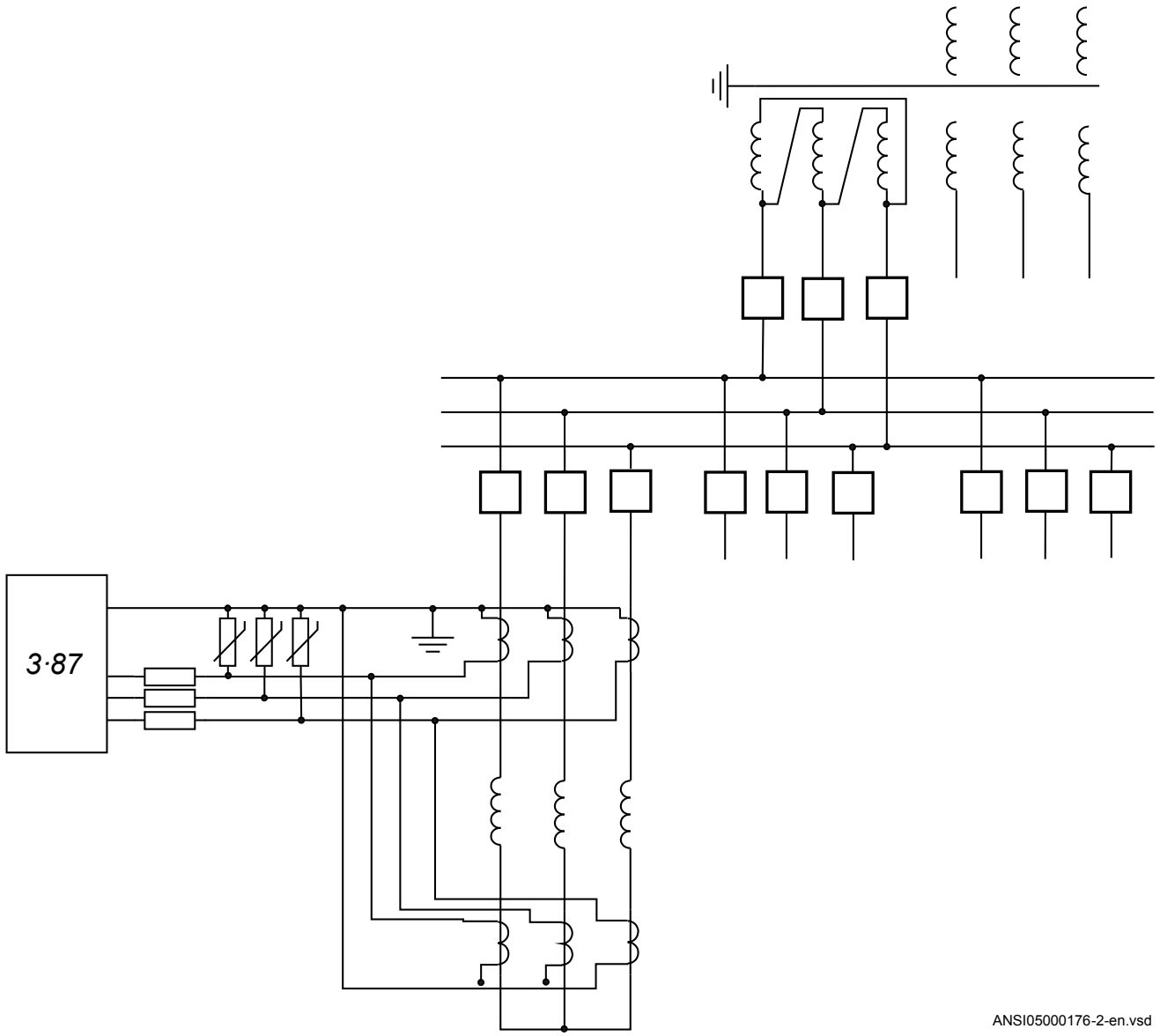

Figure 37: Application of the1Ph High impedance differential protection HZPDIF (87) function on a reactor

Setting example

It is strongly recommended to use the highest tap of the CT whenever high impedance protection is used. This helps in utilizing maximum CT capability, minimize the secondary fault, thereby reducing the stability voltage limit. Another factor is that during internal faults, the voltage developed across the selected tap is limited by the non-linear resistor but

in the unused taps, owing to auto-transformer action, voltages much higher than design limits might be induced.

Basic data:	
Current transformer ratio:	100/5 A (Note: Must be the same at all locations)
CT Class:	C200
Secondary resistance:	0.1 Ohms (At 100/5 Tap)
Cable loop resistance:	<100 ft AWG10 (one way between the junction point and the farthest CT) to be limited to approximately 0.1 Ohms at 75deg C Note! Only one way as the tertiary power system grounding is limiting the ground-fault current. If high ground-fault current exists use two way cable length.
Max fault current:	The maximum through fault current is limited by the reactor reactance and the inrush will be the worst for a reactor for example, 800 A.

Calculation:

$$VR > \frac{800}{20} \cdot (0.1 + 0.1) = 8$$

(Equation 19)

Select a setting of *TripPickup*=30 V.

The current transformer knee point voltage must be at least, twice the set operating voltage *TripPickup*.

$$VkneeANSI > \left(2 + 0.1\right) \cdot 100 \cdot 0.7 = 147 \text{ V}$$

(Equation 20)

that is, greater than 2 × *TripPickup*.

Check from the table of selected resistances the required series stabilizing resistor value to use. Since this application requires good sensitivity, select *R Series* = 100 ohm, which gives an IED current of 200 mA.

To calculate the sensitivity at operating voltage, refer to equation 21, which gives an acceptable value, ignoring the current drawn by the non-linear resistor. A little lower sensitivity could be selected by using a lower resistance value.

$$IP = \frac{100}{5} \cdot (200 + 2 \cdot 30) \leq approx.5.2A$$

(Equation 21)

Where 200mA is the current drawn by the IED circuit and 50mA is the current drawn by each CT just at pickup. The magnetizing current is taken from the magnetizing curve of the current transformer cores, which should be available. The current value at *TripPickup* is taken.

6.1.4.5 Alarm level operation

The 1Ph High impedance differential protection HZPDIF (87) function has a separate alarm level, which can be used to give alarm for problems with an involved current transformer circuit. The setting level is normally selected to be around 10% of the operating voltage *TripPickup*.

As seen in the setting examples above the sensitivity of HZPDIF (87) function is normally high, which means that the function will in many cases operate also for short circuits or open current transformer secondary circuits. However the stabilizing resistor can be selected to achieve sensitivity higher than normal load current and/or separate criteria can be added to the operation, like a check zone. This can be either another IED, with the same HZPDIF (87) function, or be a check about the fault condition, which is performed by a ground overcurrent function or neutral point voltage function.

For such cases where operation is not expected during normal service the alarm output should be used to activate an external shorting of the differential circuit avoiding continuous high voltage in the circuit. A time delay of a few seconds is used before the shorting and alarm are activated. Auxiliary relays with contacts that can withstand high voltage shall be used, like RXMVB types.

The metrosil operating characteristic is given in the following figure.

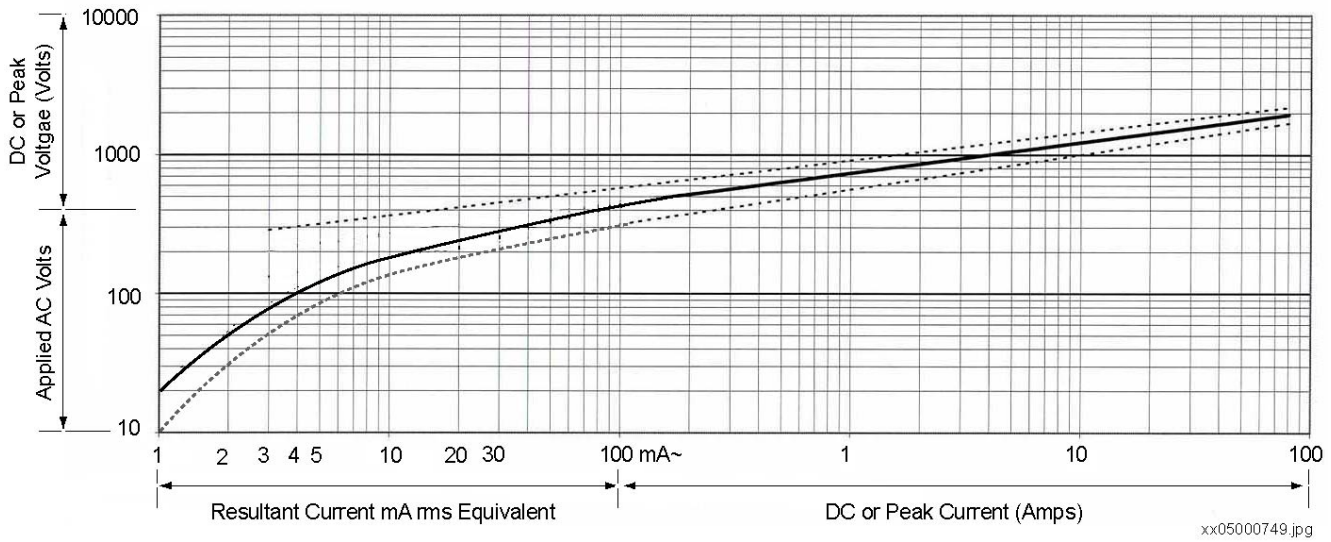

Figure 38: Current voltage characteristics for the non-linear resistors, in the range 10-200 V, the average range of current is: 0.01–10 mA

Section 7 Current protection

7.1 Instantaneous phase overcurrent protection 3-phase output PHPIOC (50)

7.1.1 Identification

Function description	IEC 61850 identification	IEC 60617 identification	ANSI/IEEE C37.2 device number
Instantaneous phase overcurrent protection 3-phase output	PHPIOC	*3I>>*	50

7.1.2 Application

Long transmission lines often transfer great quantities of electric power from production to consumption areas. The unbalance of the produced and consumed electric power at each end of the transmission line is very large. This means that a fault on the line can easily endanger the stability of a complete system.

The transient stability of a power system depends mostly on three parameters (at constant amount of transmitted electric power):

- The type of the fault. Three-phase faults are the most dangerous, because no power can be transmitted through the fault point during fault conditions.
- The magnitude of the fault current. A high fault current indicates that the decrease of transmitted power is high.
- The total fault clearing time. The phase angles between the EMFs of the generators on both sides of the transmission line increase over the permitted stability limits if the total fault clearing time, which consists of the protection operating time and the breaker opening time, is too long.

The fault current on long transmission lines depends mostly on the fault position and decreases with the distance from the generation point. For this reason the protection must

operate very quickly for faults very close to the generation (and relay) point, for which very high fault currents are characteristic.

The instantaneous phase overcurrent protection 3-phase output PHPIOC (50) can operate in 10 ms for faults characterized by very high currents.

7.1.3 Setting guidelines

The parameters for instantaneous phase overcurrent protection 3-phase output PHPIOC (50) are set via the local HMI or PCM600.

This protection function must operate only in a selective way. So check all system and transient conditions that could cause its unwanted operation.

Only detailed network studies can determine the operating conditions under which the highest possible fault current is expected on the line. In most cases, this current appears during three-phase fault conditions. But also examine single-phase-to-ground and two-phase-to-ground conditions.

Also study transients that could cause a high increase of the line current for short times. A typical example is a transmission line with a power transformer at the remote end, which can cause high inrush current when connected to the network and can thus also cause the operation of the built-in, instantaneous, overcurrent protection.

GlobalBaseSel: Selects the global base value group used by the function to define (*IBase*), (*VBase*) and (*SBase*).

OpModeSel: This parameter can be set to *2 out of 3* or *1 out of 3*. The setting controls the minimum number of phase currents that must be larger than the set operate current *Pickup* for operation. Normally this parameter is set to *1 out of 3*and will thus detect all fault types. If the protection is to be used mainly for multi phase faults, *2 out of 3* should be chosen.

Pickup: Set operate current in % of *IBase*.

MultPU: The operate current can be changed by activation of the binary input MULTPU to the set factor *MultPU*.

7.1.3.1 Meshed network without parallel line

The following fault calculations have to be done for three-phase, single-phase-to-ground and two-phase-to-ground faults. With reference to figure 39, apply a fault in B and then calculate the current through-fault phase current I_{fB}. The calculation should be done using the minimum source impedance values for Z_A and the maximum source impedance values for Z_B in order to get the maximum through fault current from A to B.

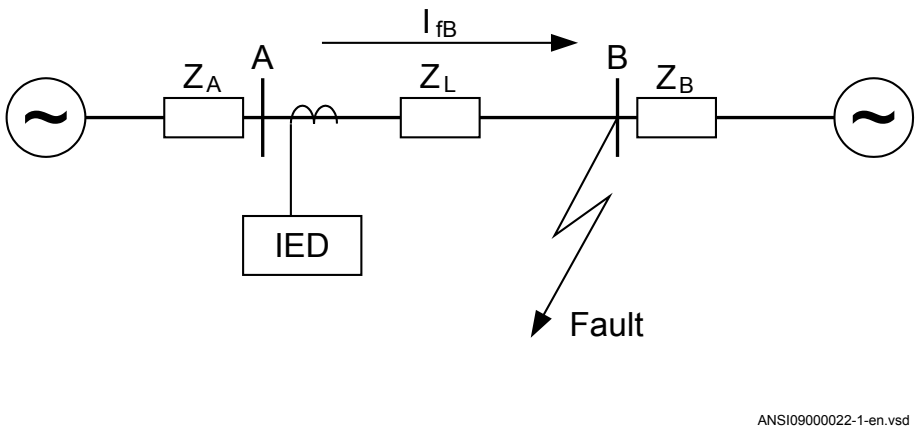

Figure 39: Through fault current from A to B: I_{fB}

Then a fault in A has to be applied and the through fault current I_{fA} has to be calculated, figure 40. In order to get the maximum through fault current, the minimum value for Z_B and the maximum value for Z_A have to be considered.

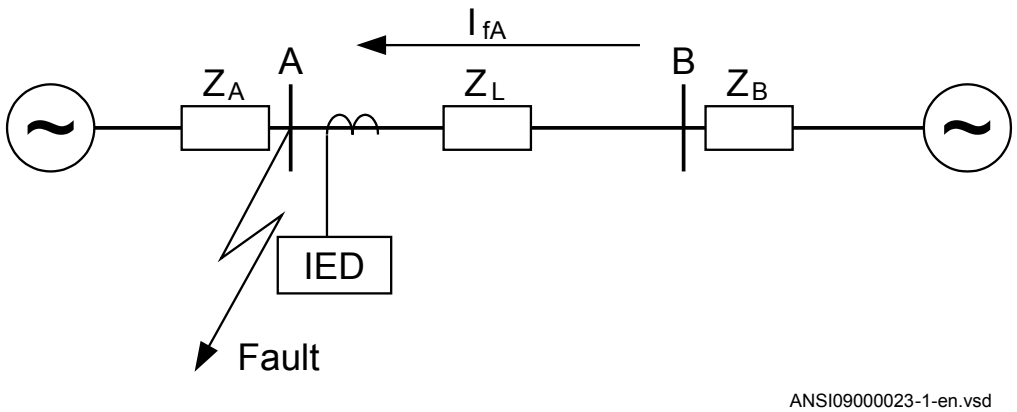

Figure 40: Through fault current from B to A: I_{fA}

The IED must not trip for any of the two through-fault currents. Hence the minimum theoretical current setting (Imin) will be:

$$Imin \geq MAX(I_{fA}, I_{fB})$$

(Equation 22)

A safety margin of 5% for the maximum protection static inaccuracy and a safety margin of 5% for the maximum possible transient overreach have to be introduced. An additional 20% is suggested due to the inaccuracy of the instrument transformers under transient conditions and inaccuracy in the system data.

The minimum primary setting (Is) for the instantaneous phase overcurrent protection 3-phase output is then:

$$I_s \geq 1.3 \cdot I_{min}$$

(Equation 23)

The protection function can be used for the specific application only if this setting value is equal to or less than the maximum fault current that the IED has to clear, I_F in figure 41.

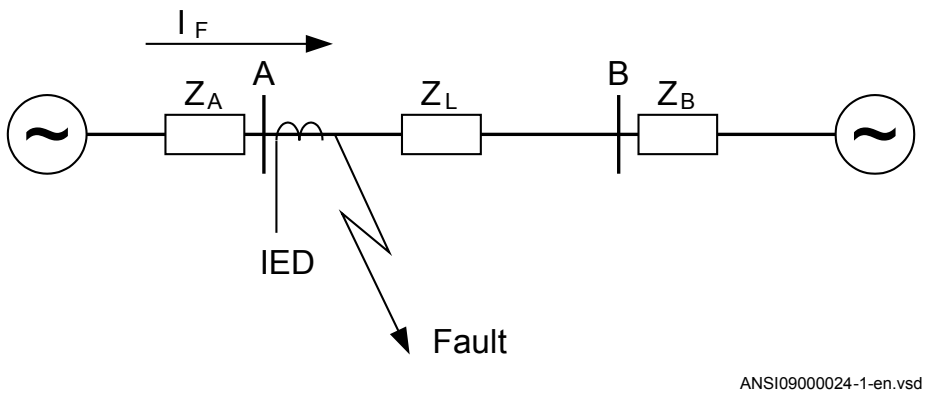

Figure 41: Fault current: I_F

The IED setting value *Pickup* is given in percentage of the primary base current value, *IBase*. The value for *Pickup* is given from this formula:

$$Pickup = \frac{Is}{IBase} \cdot 100$$

(Equation 24)

7.1.3.2 Meshed network with parallel line

In case of parallel lines, the influence of the induced current from the parallel line to the protected line has to be considered. One example is given in figure 42 where the two lines are connected to the same busbars. In this case the influence of the induced fault current from the faulty line (line 1) to the healthy line (line 2) is considered together with the two through fault currents I_{fA} and I_{fB} mentioned previously. The maximal influence from the parallel line for the IED in figure 42 will be with a fault at the C point with the C breaker open.

A fault in C has to be applied, and then the maximum current seen from the IED (I_M) on the healthy line (this applies for single-phase-to-ground and two-phase-to-ground faults) is calculated.

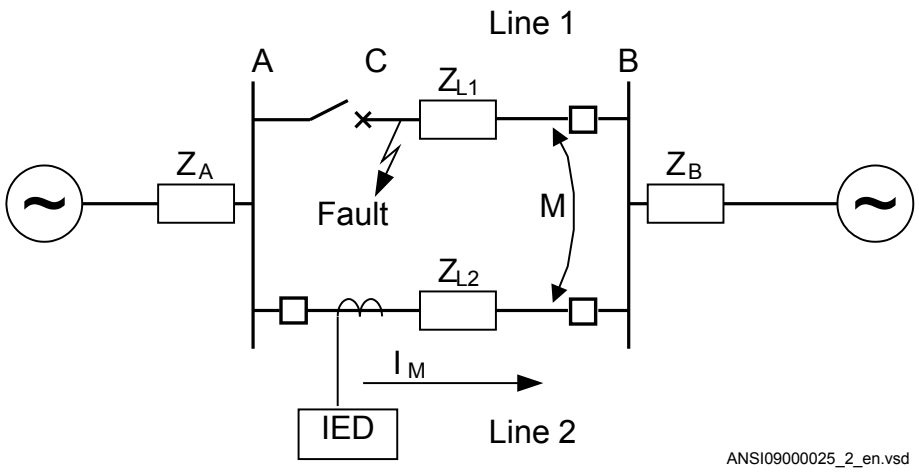

Figure 42: Two parallel lines. Influence from parallel line to the through fault current: I_M

The minimum theoretical current setting for the overcurrent protection function (Imin) will be:

$$Imin \geq MAX(I_{fA}, I_{fB}, I_M)$$

(Equation 25)

Where I_{fA} and I_{fB} have been described in the previous paragraph. Considering the safety margins mentioned previously, the minimum setting (Is) for the instantaneous phase overcurrent protection 3-phase output is then:

$$Is \geq 1.3 \cdot Imin$$

(Equation 26)

The protection function can be used for the specific application only if this setting value is equal or less than the maximum phase fault current that the IED has to clear.

The IED setting value *Pickup* is given in percentage of the primary base current value, *IBase*. The value for *Pickup* is given from this formula:

$$Pickup = \frac{Is}{IBase} \cdot 100$$

(Equation 27)

7.2 Four step phase overcurrent protection 3-phase output OC4PTOC (51/67)

7.2.1 Identification

Function description	IEC 61850 identification	IEC 60617 identification	ANSI/IEEE C37.2 device number
Four step phase overcurrent protection 3-phase output	OC4PTOC	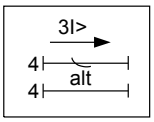	51/67

7.2.2 Application

The Four step phase overcurrent protection 3-phase output OC4PTOC (51_67) is used in several applications in the power system. Some applications are:

- Short circuit protection of feeders in distribution and subtransmission systems. Normally these feeders have radial structure.
- Back-up short circuit protection of transmission lines.
- Back-up short circuit protection of power transformers.
- Short circuit protection of different kinds of equipment connected to the power system such as; shunt capacitor banks, shunt reactors, motors and others.
- Back-up short circuit protection of power generators.

If VT inputs are not available or not connected, setting parameter *DirModeSelx* (*x* = step 1, 2, 3 or 4) shall be left to default value *Non-directional*.

In many applications several steps with different current pick up levels and time delays are needed. OC4PTOC (51_67) can have up to four different, individual settable, steps. The flexibility of each step of OC4PTOC (51_67) is great. The following options are possible:

Non-directional / Directional function: In most applications the non-directional functionality is used. This is mostly the case when no fault current can be fed from the protected object itself. In order to achieve both selectivity and fast fault clearance, the directional function can be necessary.

Choice of delay time characteristics: There are several types of delay time characteristics available such as definite time delay and different types of inverse time delay

characteristics. The selectivity between different overcurrent protections is normally enabled by co-ordination between the function time delays of the different protections. To enable optimal co-ordination between all overcurrent protections, they should have the same time delay characteristic. Therefore a wide range of standardized inverse time characteristics are available: IEC and ANSI. It is also possible to tailor make the inverse time characteristic.

Normally it is required that the phase overcurrent protection shall reset as fast as possible when the current level gets lower than the operation level. In some cases some sort of delayed reset is required. Therefore different kinds of reset characteristics can be used.

For some protection applications there can be a need to change the current pick-up level for some time. A typical case is when the protection will measure the current to a large motor. At the start up sequence of a motor the start current can be significantly larger than the rated current of the motor. Therefore there is a possibility to give a setting of a multiplication factor to the current pick-up level. This multiplication factor is activated from a binary input signal to the function.

Power transformers can have a large inrush current, when being energized. This phenomenon is due to saturation of the transformer magnetic core during parts of the period. There is a risk that inrush current will reach levels above the pick-up current of the phase overcurrent protection. The inrush current has a large 2nd harmonic content. This can be used to avoid unwanted operation of the protection. Therefore, OC4PTOC (51/67) have a possibility of 2nd harmonic restrain if the level of this harmonic current reaches a value above a set percentage of the fundamental current.

The phase overcurrent protection is often used as protection for two and three phase short circuits. In some cases it is not wanted to detect single-phase ground faults by the phase overcurrent protection. This fault type is detected and cleared after operation of ground fault protection. Therefore it is possible to make a choice how many phases, at minimum, that have to have current above the pick-up level, to enable operation. If set *1 of 3* it is sufficient to have high current in one phase only. If set *2 of 3* or *3 of 3* single-phase ground faults are not detected.

7.2.3 Setting guidelines

When inverse time overcurrent characteristic is selected, the operate time of the stage will be the sum of the inverse time delay and the set definite time delay. Thus, if only the inverse time delay is required, it is important to set the definite time delay for that stage to zero.

The parameters for Four step phase overcurrent protection 3-phase output OC4PTOC (51/67) are set via the local HMI or PCM600.

The following settings can be done for OC4PTOC (51/67).

GlobalBaseSel: Selects the global base value group used by the function to define (*IBase*), (*VBase*) and (*SBase*).

MeasType: Selection of discrete Fourier filtered (*DFT*) or true RMS filtered (*RMS*) signals. *RMS* is used when the harmonic contents are to be considered, for example in applications with shunt capacitors.

Operation: The protection can be set to *Disabled* or *Enabled*

AngleRCA: Protection characteristic angle set in degrees. If the angle of the fault loop current has the angle RCA the direction to fault is forward.

AngleROA: Angle value, given in degrees, to define the angle sector of the directional function, see figure 43.

PUMinOpPhSel: Minimum current for phase selection set in % of *IBase*. This setting should be less than the lowest step setting. Default setting is 7%.

NumPhSel: Number of phases, with high current, required for operation. The setting possibilities are: *Not used*,*1 out of 3*, *2 out of 3* and *3 out of 3*. Default setting is *1 out of 3*.

2ndHarmStab: Operate level of 2nd harmonic current restrain set in % of the fundamental current. The setting range is *5 - 100*% in steps of 1%. Default setting is 20%.

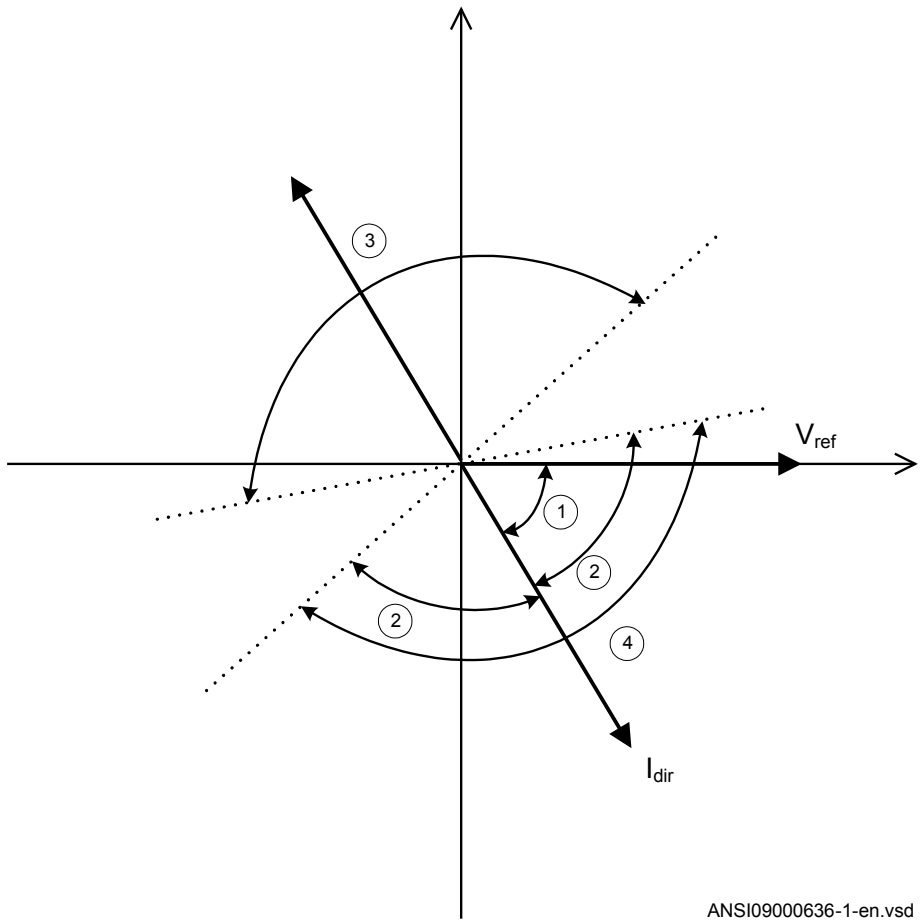

Figure 43: Directional function characteristic

1. RCA = Relay characteristic angle
2. ROA = Relay operating angle
3. Reverse
4. Forward

7.2.3.1 Settings for each step

x means step 1, 2, 3 and 4.

DirModeSelx: The directional mode of step *x*. Possible settings are *Disabled*/*Non-directional*/*Forward*/*Reverse*.

Characteristx: Selection of time characteristic for step *x*. Definite time delay and different types of inverse time characteristics are available according to table 12.

Table 12: Inverse time characteristics

Curve name
ANSI Extremely Inverse
ANSI Very Inverse
ANSI Normal Inverse
ANSI Moderately Inverse
ANSI/IEEE Definite time
ANSI Long Time Extremely Inverse
ANSI Long Time Very Inverse
ANSI Long Time Inverse
IEC Normal Inverse
IEC Very Inverse
IEC Inverse
IEC Extremely Inverse
IEC Short Time Inverse
IEC Long Time Inverse
IEC Definite Time
User Programmable
ASEA RI
RXIDG (logarithmic)

The different characteristics are described in Technical reference manual.

Pickupx: Operate phase current level for step *x* given in % of *IBase*.

tx: Definite time delay for step *x*. Used if definite time characteristic is chosen.

TDx: Time multiplier for inverse time delay for step *x*.

IMinx: Minimum operate current for step *x* in % of *IBase*. Set *IMinx* below *Pickupx* for every step to achieve ANSI reset characteristic according to standard. If *IMinx* is set above *Pickupx* for any step the ANSI reset works as if current is zero when current drops below *IMinx*.

MultPUx: Multiplier for scaling of the current setting value. If a binary input signal (enableMultiplier) is activated the current operation level is increase by this setting constant. Setting range: 1.0-10.0

txMin: Minimum operate time for all inverse time characteristics. At high currents the inverse time characteristic might give a very short operation time. By setting this parameter the operation time of the step can never be shorter than the setting. Setting range: 0.000 - 60.000s in steps of 0.001s.

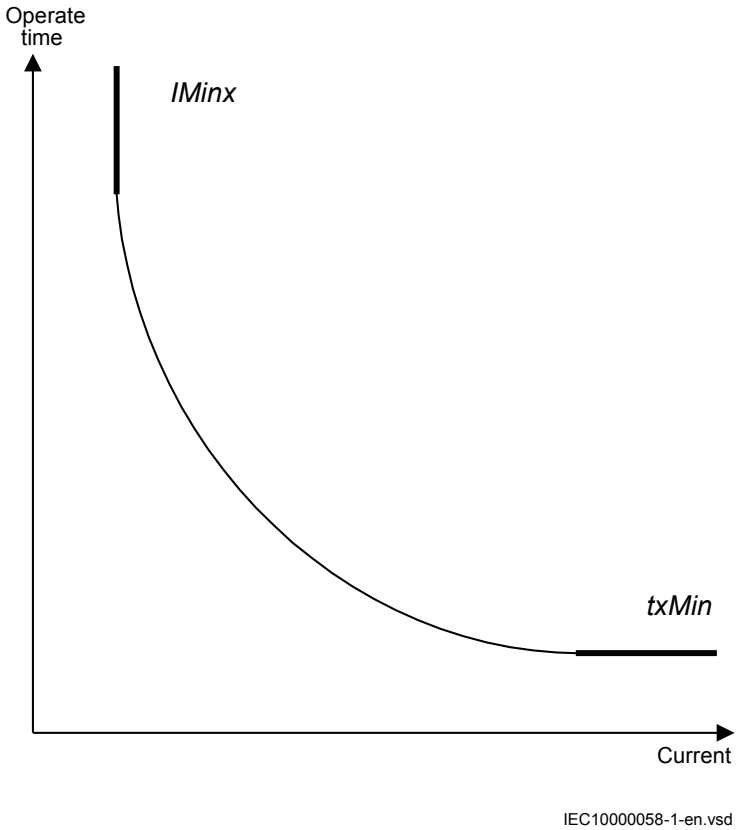

Figure 44: Minimum operate current and operation time for inverse time characteristics

In order to fully comply with curves definition setting parameter *txMin* shall be set to the value, which is equal to the operating time of the selected inverse curve for measured current of twenty times the set current pickup value. Note that the operating time value is dependent on the selected setting value for time multiplier *kx*.

ResetTypeCrvx: The reset of the delay timer can be made in different ways. By choosing setting the possibilities are according to table 13.

Table 13: Reset possibilities

Curve name	Curve index no.
Instantaneous	1
IEC Reset (constant time)	2
ANSI Reset (inverse time)	3

The delay characteristics are described in the technical reference manual. There are some restrictions regarding the choice of reset delay.

For the definite time delay characteristics the possible delay time settings are instantaneous (1) and IEC (2 = set constant time reset).

For ANSI inverse time characteristics all three types of reset time characteristics are available; instantaneous (1), IEC (2 = set constant time reset) and ANSI (3 = current dependent reset time).

For IEC inverse time characteristics the possible delay time settings are instantaneous (1) and IEC (2 = set constant time reset).

For the customer tailor made inverse time delay characteristics (type 17) all three types of reset time characteristics are available; instantaneous (1), IEC (2 = set constant time reset) and ANSI (3 = current dependent reset time). If the current dependent type is used settings pr, tr and cr must be given.

HarmRestrainx: Enable block of step *x* from the harmonic restrain function (2nd harmonic). This function should be used when there is a risk if power transformer inrush currents might cause unwanted trip. Can be set *Disabled*/*Enabled*.

tPCrvx, *tACrvx*, *tBCrvx*, *tCCrvx*: Parameters for customer creation of inverse time characteristic curve (Curve type = 17). See equation 28 for the time characteristic equation.

$$t[s] = \left(\frac{A}{\left(\frac{i}{in>} \right)^{p} - C} + B \right) \cdot MultPUx$$

(Equation 28)

For more information, refer to the technical reference manual.

tPRCrvx, *tTRCrvx*, *tCRCrvx*: Parameters for customer creation of inverse reset time characteristic curve (Reset Curve type = 3). Further description can be found in the technical reference manual.

7.2.3.2 2nd harmonic restrain

If a power transformer is energized there is a risk that the transformer core will saturate during part of the period, resulting in an inrush transformer current. This will give a declining residual current in the network, as the inrush current is deviating between the phases. There is a risk that the phase overcurrent function will give an unwanted trip. The

inrush current has a relatively large ratio of 2nd harmonic component. This component can be used to create a restrain signal to prevent this unwanted function.

The settings for the 2nd harmonic restrain are described below.

2ndHarmStab: The rate of 2nd harmonic current content for activation of the 2nd harmonic restrain signal, to block chosen steps. The setting is given in % of the fundamental frequency residual current. The setting range is *5 - 100*% in steps of 1%. The default setting is 20% and can be used if a deeper investigation shows that no other value is needed..

HarmRestrainx: This parameter can be set *Disabled*/*Enabled*, to disable or enable the 2nd harmonic restrain.

The four step phase overcurrent protection 3-phase output can be used in different ways, depending on the application where the protection is used. A general description is given below.

The pickup current setting of the inverse time protection, or the lowest current step of the definite time protection, must be defined so that the highest possible load current does not cause protection operation. Here consideration also has to be taken to the protection reset current, so that a short peak of overcurrent does not cause operation of the protection even when the overcurrent has ceased. This phenomenon is described in figure 45.

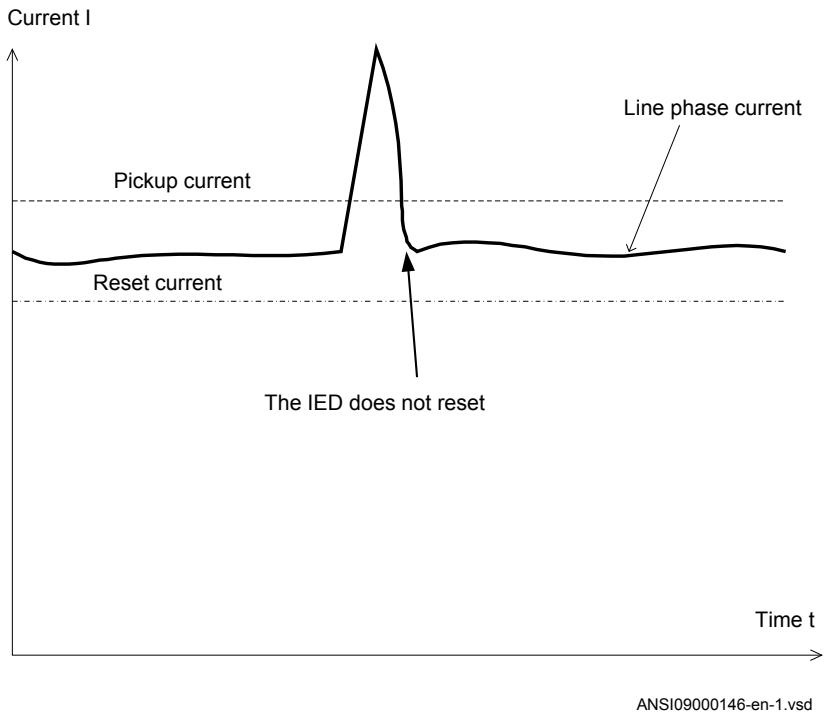

Figure 45: Pickup and reset current for an overcurrent protection

The lowest setting value can be written according to equation 29.

$$Ipu \geq 1.2 \cdot \frac{Imax}{k}$$

(Equation 29)

where:

1.2	is a safety factor
k	is the resetting ratio of the protection
Imax	is the maximum load current

From operation statistics the load current up to the present situation can be found. The current setting must be valid also for some years ahead. It is, in most cases, realistic that the setting values are updated not more often than once every five years. In many cases this time interval is still longer. Investigate the maximum load current that different equipment on the line can withstand. Study components such as line conductors, current transformers, circuit breakers, and disconnectors. The manufacturer of the equipment normally gives the maximum thermal load current of the equipment.

The maximum load current on the line has to be estimated. There is also a demand that all faults, within the zone that the protection shall cover, must be detected by the phase overcurrent protection. The minimum fault current Iscmin, to be detected by the protection, must be calculated. Taking this value as a base, the highest pick up current setting can be written according to equation 30.

$$\mathrm{Ipu} \le 0.7 \cdot \mathrm{Isc\,min}$$

(Equation 30)

where:

0.7	is a safety factor
Iscmin	is the smallest fault current to be detected by the overcurrent protection.

As a summary the pickup current shall be chosen within the interval stated in equation 31.

$$1.2 \cdot \frac{\mathrm{Im\,ax}}{\mathrm{k}} \le \mathrm{Ipu} \le 0.7 \cdot \mathrm{Isc\,min}$$

(Equation 31)

The high current function of the overcurrent protection, which only has a short delay of the operation, must be given a current setting so that the protection is selective to other protection in the power system. It is desirable to have a rapid tripping of faults within as large portion as possible of the part of the power system to be protected by the protection (primary protected zone). A fault current calculation gives the largest current of faults, Iscmax, at the most remote part of the primary protected zone. Considerations have to be made to the risk of transient overreach, due to a possible DC component of the short circuit current. The lowest current setting of the most rapid stage, of the phase overcurrent protection, can be written according to

$$I_{high} \ge 1.2 \cdot k_t \cdot I_{sc\max}$$

(Equation 32)

where:

1.2	is a safety factor
k_t	is a factor that takes care of the transient overreach due to the DC component of the fault current and can be considered to be less than 1.05
Iscmax	is the largest fault current at a fault at the most remote point of the primary protection zone.

The operate times of the phase overcurrent protection has to be chosen so that the fault time is so short that protected equipment will not be destroyed due to thermal overload, at

the same time as selectivity is assured. For overcurrent protection, in a radial fed network, the time setting can be chosen in a graphical way. This is mostly used in the case of inverse time overcurrent protection. Figure 46 shows how the time-versus-current curves are plotted in a diagram. The time setting is chosen to get the shortest fault time with maintained selectivity. Selectivity is assured if the time difference between the curves is larger than a critical time difference.

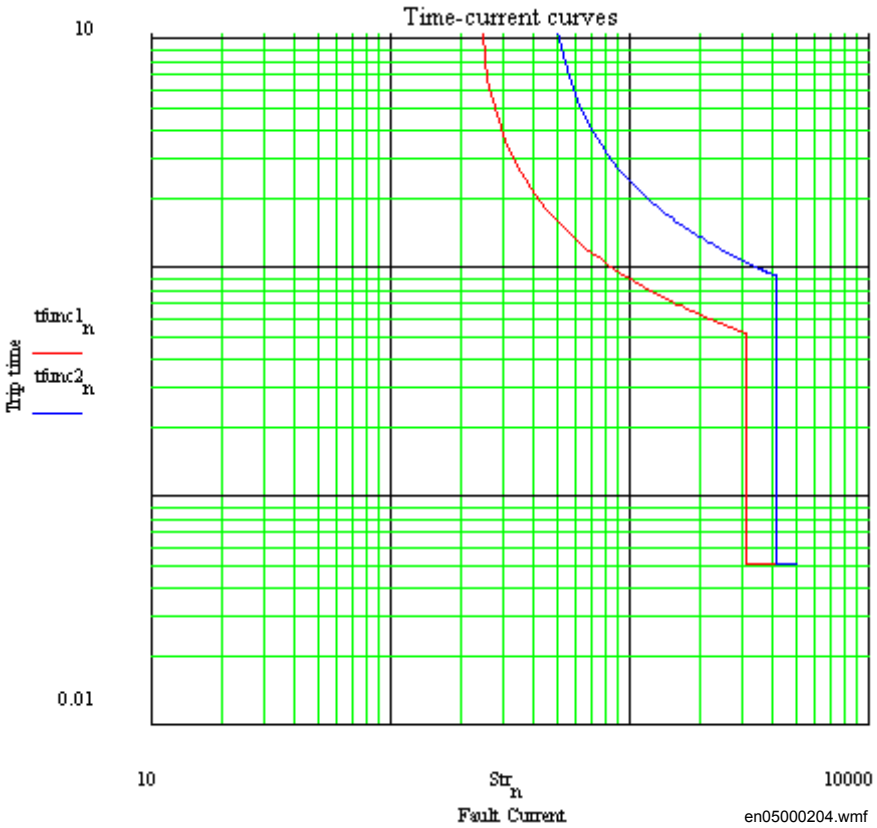

Figure 46: Fault time with maintained selectivity

The operation time can be set individually for each overcurrent protection.

To assure selectivity between different protections, in the radial network, there have to be a minimum time difference Δt between the time delays of two protections. The minimum time difference can be determined for different cases. To determine the shortest possible time difference, the operation time of protections, breaker opening time and protection resetting time must be known. These time delays can vary significantly between different protective equipment. The following time delays can be estimated:

Protection operation time:	15-60 ms
Protection resetting time:	15-60 ms
Breaker opening time:	20-120 ms

Example for time coordination

Assume two substations A and B directly connected to each other via one line, as shown in the figure 47. Consider a fault located at another line from the station B. The fault current to the overcurrent protection of IED B1 has a magnitude so that the protection will have instantaneous function. The overcurrent protection of IED A1 must have a delayed function. The sequence of events during the fault can be described using a time axis, see figure 47.

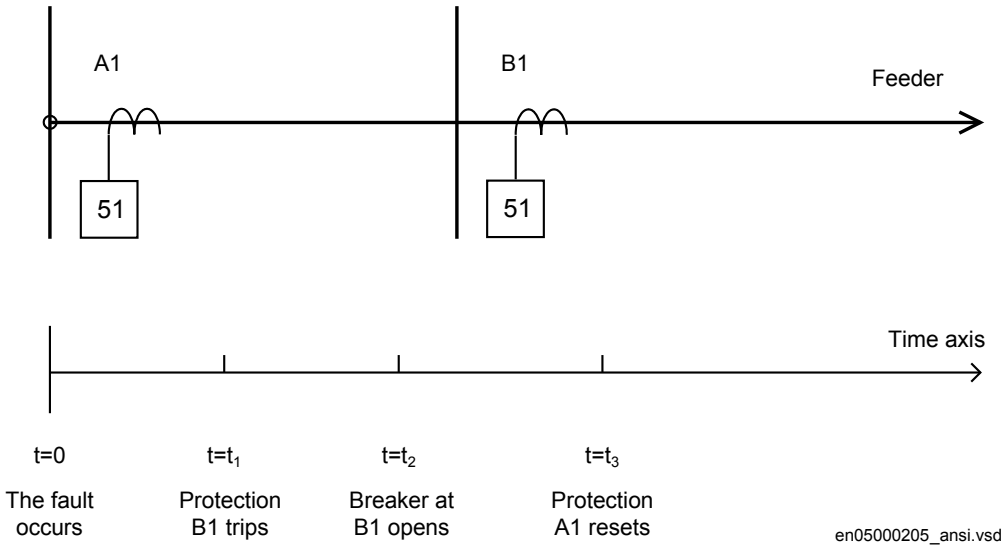

Figure 47: Sequence of events during fault

where:

t=0	is when the fault occurs
$t=t_1$	is when the trip signal from the overcurrent protection at IED B1 is sent to the circuit breaker. The operation time of this protection is t_1
$t=t_2$	is when the circuit breaker at IED B1 opens. The circuit breaker opening time is $t_2 - t_1$
$t=t_3$	is when the overcurrent protection at IED A1 resets. The protection resetting time is $t_3 - t_2$.

To ensure that the overcurrent protection at IED A1, is selective to the overcurrent protection at IED B1, the minimum time difference must be larger than the time t_3. There

are uncertainties in the values of protection operation time, breaker opening time and protection resetting time. Therefore a safety margin has to be included. With normal values the needed time difference can be calculated according to equation 33.

$$\Delta t \geq 40\,ms + 100\,ms + 40\,ms + 40\,ms = 220\,ms$$

(Equation 33)

where it is considered that:

the operate time of overcurrent protection B1	is 40 ms
the breaker open time	is 100 ms
the resetting time of protection A1	is 40 ms and
the additional margin	is 40 ms

7.3 Instantaneous residual overcurrent protection EFPIOC (50N)

7.3.1 Identification

Function description	IEC 61850 identification	IEC 60617 identification	ANSI/IEEE C37.2 device number
Instantaneous residual overcurrent protection	EFPIOC	*IN*>>	50N

7.3.2 Application

In many applications, when fault current is limited to a defined value by the object impedance, an instantaneous ground-fault protection can provide fast and selective tripping.

The Instantaneous residual overcurrent EFPIOC (50N), which can operate in 15 ms (50 Hz nominal system frequency) for faults characterized by very high currents, is included in the IED.

7.3.3 Setting guidelines

The parameters for the Instantaneous residual overcurrent protection EFPIOC (50N) are set via the local HMI or PCM600.

Some guidelines for the choice of setting parameter for EFPIOC (50N) is given.

GlobalBaseSel: Selects the global base value group used by the function to define (*IBase*), (*VBase*) and (*SBase*).

The setting of the function is limited to the operate residual current to the protection (*Pickup*).

The basic requirement is to assure selectivity, that is EFPIOC (50N) shall not be allowed to operate for faults at other objects than the protected object (line).

For a normal line in a meshed system single phase-to-ground faults and phase-to-phase-to-ground faults shall be calculated as shown in figure 48 and figure 49. The residual currents ($3I_0$) to the protection are calculated. For a fault at the remote line end this fault current is I_{fB}. In this calculation the operational state with high source impedance Z_A and low source impedance Z_B should be used. For the fault at the home busbar this fault current is I_{fA}. In this calculation the operational state with low source impedance Z_A and high source impedance Z_B should be used.

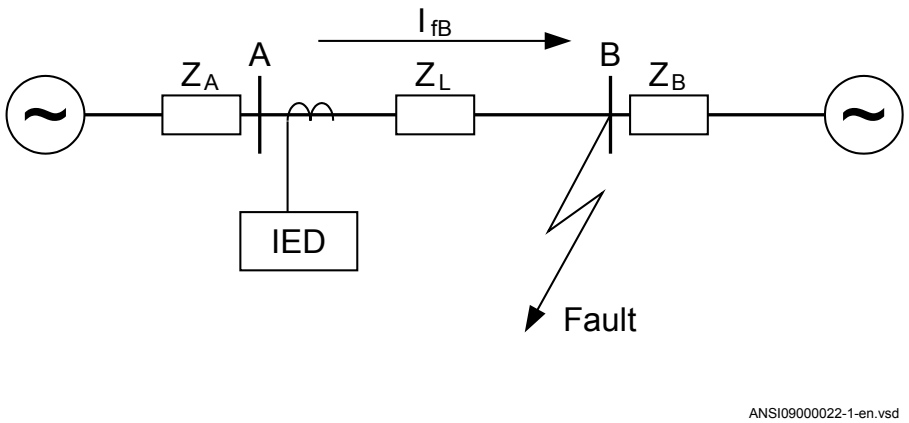

Figure 48: Through fault current from A to B: I_{fB}

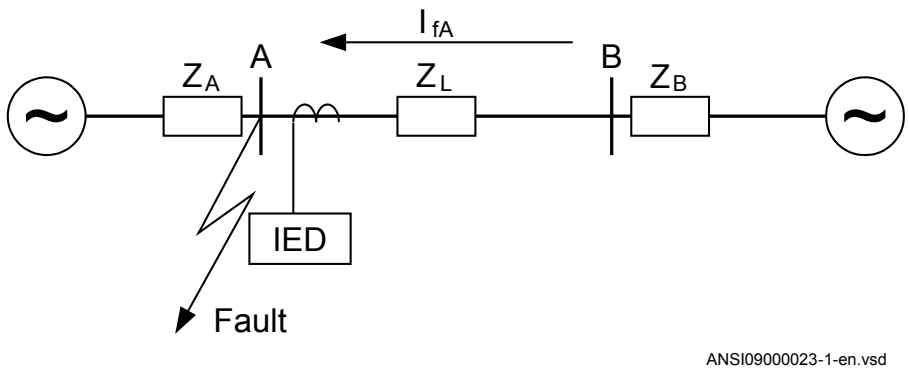

Figure 49: Through fault current from B to A: I_{fA}

The function shall not operate for any of the calculated currents to the protection. The minimum theoretical current setting (Imin) will be:

$$Imin \geq MAX(I_{fA}, I_{fA})$$

(Equation 34)

A safety margin of 5% for the maximum static inaccuracy and a safety margin of 5% for maximum possible transient overreach have to be introduced. An additional 20% is suggested due to inaccuracy of instrument transformers under transient conditions and inaccuracy in the system data.

The minimum primary current setting (Is) is:

$$I_s = 1.3 \times I_{min}$$

(Equation 35)

In case of parallel lines with zero sequence mutual coupling a fault on the parallel line, as shown in figure 50, should be calculated.

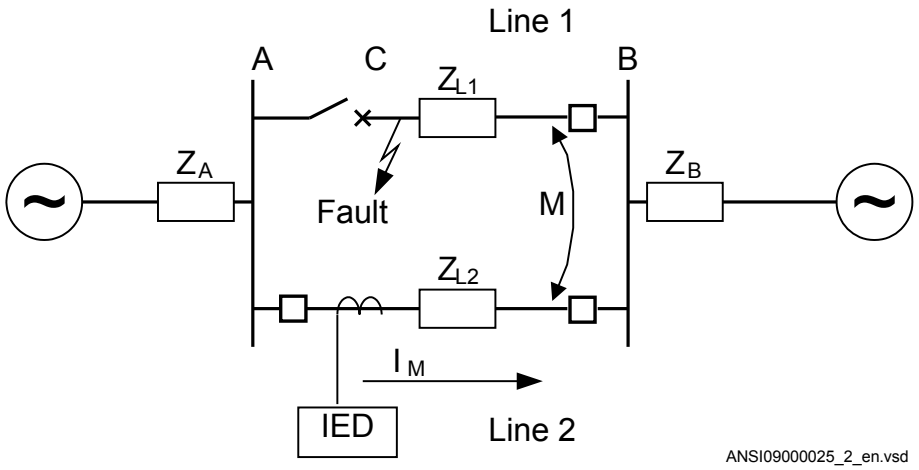

Figure 50: Two parallel lines. Influence from parallel line to the through fault current: I_M

The minimum theoretical current setting (Imin) will in this case be:

$$Imin \geq MAX(I_{fA}, I_{fB}, I_M)$$

(Equation 36)

Where:

I_{fA} and I_{fB} have been described for the single line case.

Considering the safety margins mentioned previously, the minimum setting (Is) is:

$$I_s = 1.3 \times I_{min}$$

(Equation 37)

Transformer inrush current shall be considered.

The setting of the protection is set as a percentage of the base current (*IBase*).

Operation: set the protection to *Enabled* or *Disabled*.

Pickup: Set operate current in % of *IBase*.

MultPU: The operate current can be changed by activation of the binary input MULTPU to the set factor *MultPU*.

7.4 Four step residual overcurrent protection, (Zero sequence or negative sequence directionality) EF4PTOC (51N/67N)

7.4.1 Identification

Function description	IEC 61850 identification	IEC 60617 identification	ANSI/IEEE C37.2 device number
Four step residual overcurrent protection	EF4PTOC	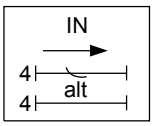	51N/67N

7.4.2 Application

The four step residual overcurrent protection EF4PTOC (51N_67N) is used in several applications in the power system. Some applications are:

- Ground-fault protection of feeders in effectively grounded distribution and subtransmission systems. Normally these feeders have radial structure.
- Back-up ground-fault protection of transmission lines.
- Sensitive ground-fault protection of transmission lines. EF4PTOC (51N_67N) can have better sensitivity to detect resistive phase-to-ground-faults compared to distance protection.
- Back-up ground-fault protection of power transformers.
- Ground-fault protection of different kinds of equipment connected to the power system such as shunt capacitor banks, shunt reactors and others.

In many applications several steps with different current pickup levels and time delays are needed. EF4PTOC (51N_67N) can have up to four, individual settable steps. The flexibility of each step of EF4PTOC (51N_67N) is great. The following options are possible:

Non-directional/Directional function: In some applications the non-directional functionality is used. This is mostly the case when no fault current can be fed from the protected object itself. In order to achieve both selectivity and fast fault clearance, the directional function can be necessary. This can be the case for ground-fault protection in meshed and effectively grounded transmission systems. The directional residual overcurrent protection is also well suited to operate in teleprotection communication schemes, which enables fast clearance of ground faults on transmission lines. The

directional function uses the polarizing quantity as decided by setting. Voltage polarizing is most commonly used, but alternatively current polarizing where currents in transformer neutrals providing the neutral source (ZN) is used to polarize (IN · ZN) the function. Dual polarizing where the sum of both voltage and current components is allowed to polarize can also be selected.

Choice of time characteristics: There are several types of time characteristics available such as definite time delay and different types of inverse time characteristics. The selectivity between different overcurrent protections is normally enabled by co-ordination between the operate time of the different protections. To enable optimal co-ordination all overcurrent protections, to be co-ordinated against each other, should have the same time characteristic. Therefore a wide range of standardized inverse time characteristics are available: IEC and ANSI.

Table 14: Time characteristics

Curve name
ANSI Extremely Inverse
ANSI Very Inverse
ANSI Normal Inverse
ANSI Moderately Inverse
ANSI/IEEE Definite time
ANSI Long Time Extremely Inverse
ANSI Long Time Very Inverse
ANSI Long Time Inverse
IEC Normal Inverse
IEC Very Inverse
IEC Inverse
IEC Extremely Inverse
IEC Short Time Inverse
IEC Long Time Inverse
IEC Definite Time
User Programmable
ASEA RI
RXIDG (logarithmic)

It is also possible to tailor make the inverse time characteristic.

Normally it is required that EF4PTOC (51N_67N) shall reset as fast as possible when the current level gets lower than the operation level. In some cases some sort of delayed reset is required. Therefore different kinds of reset characteristics can be used.

For some protection applications there can be a need to change the current pickup level for some time. Therefore there is a possibility to give a setting of a multiplication factor *INxMult* to the residual current pick-up level. This multiplication factor is activated from a binary input signal MULTPUx to the function.

Power transformers can have a large inrush current, when being energized. This inrush current can have residual current components. The phenomenon is due to saturation of the transformer magnetic core during parts of the cycle. There is a risk that inrush current will give a residual current that reaches level above the pickup current of the residual overcurrent protection. The inrush current has a large second harmonic content. This can be used to avoid unwanted operation of the protection. Therefore, EF4PTOC (51N_67N) has a possibility of second harmonic restrain *2ndHarmStab* if the level of this harmonic current reaches a value above a set percentage of the fundamental current.

7.4.3 Setting guidelines

When inverse time overcurrent characteristic is selected, the operate time of the stage will be the sum of the inverse time delay and the set definite time delay. Thus, if only the inverse time delay is required, it is of utmost importance to set the definite time delay for that stage to zero.

The parameters for the four step residual overcurrent protection, zero or negative sequence direction EF4PTOC (51N/67N) are set via the local HMI or PCM600.

The following settings can be done for the four step residual overcurrent protection.

GlobalBaseSel: Selects the global base value group used by the function to define (*IBase*), (*VBase*) and (*SBase*).

Operation: Sets the protection to *Enabled* or *Disabled*.

7.4.3.1 Settings for each step (x = 1, 2, 3 and 4)

DirModeSelx: The directional mode of step *x*. Possible settings are *Disabled*/*Non-directional*/*Forward*/*Reverse*.

Characteristx: Selection of time characteristic for step *x*. Definite time delay and different types of inverse time characteristics are available.

Inverse time characteristic enables fast fault clearance of high current faults at the same time as selectivity to other inverse time phase overcurrent protections can be assured. This is mainly used in radial fed networks but can also be used in meshed networks. In meshed networks the settings must be based on network fault calculations.

To assure selectivity between different protections, in the radial network, there have to be a minimum time difference Δt between the time delays of two protections. The minimum time difference can be determined for different cases. To determine the shortest possible time difference, the operation time of protections, breaker opening time and protection resetting time must be known. These time delays can vary significantly between different protective equipment. The following time delays can be estimated:

Protection operate time:	15-60 ms
Protection resetting time:	15-60 ms
Breaker opening time:	20-120 ms

The different characteristics are described in the technical reference manual.

Pickup"x": Operate residual current level for step *x* given in % of *IBase*.

kx: Time multiplier for the dependent (inverse) characteristic for step *x*.

IMinx: Minimum operate current for step *x* in % of *IBase*. Set *IMinx* below *Pickupx* for every step to achieve ANSI reset characteristic according to standard. If *IMinx* is set above for any step then signal will reset at current equals to zero.

INxMult: Multiplier for scaling of the current setting value. If a binary input signal (MULTPUx) is activated the current operation level is increased by this setting constant.

txMin: Minimum operating time for inverse time characteristics. At high currents the inverse time characteristic might give a very short operation time. By setting this parameter the operation time of the step can never be shorter than the setting.

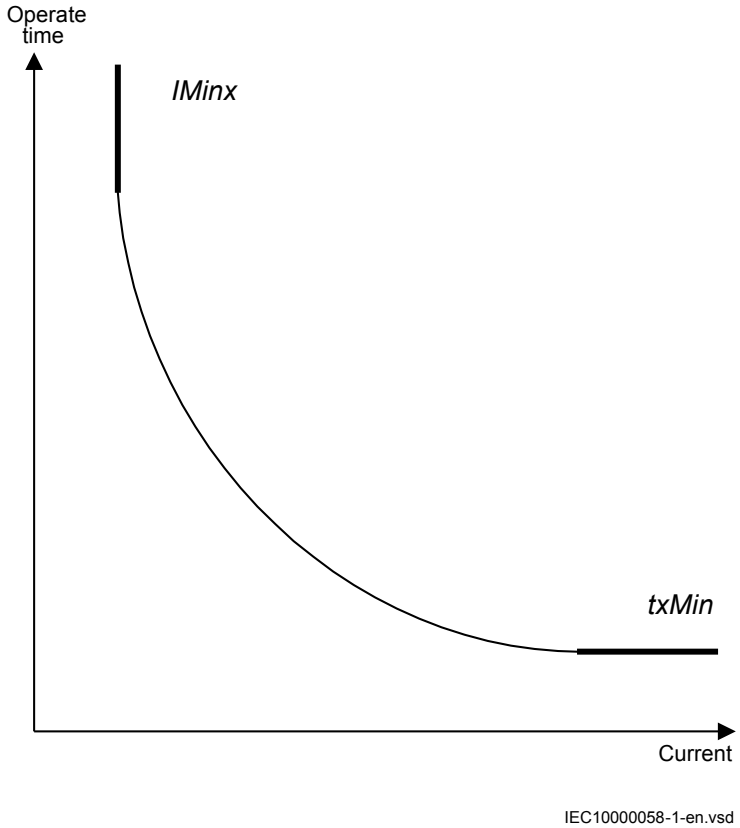

Figure 51: Minimum operate current and operate time for inverse time characteristics

In order to fully comply with curves definition the setting parameter *txMin* shall be set to the value which is equal to the operate time of the selected IEC inverse curve for measured current of twenty times the set current pickup value. Note that the operate time value is dependent on the selected setting value for time multiplier *kx*.

ResetTypeCrvx: The reset of the delay timer can be made in different ways. The possibilities are described in the technical reference manual.

tPCrvx, tACrvx, tBCrvx, tCCrvx: Parameters for user programmable of inverse time characteristic curve. The time characteristic equation is according to equation 38:

$$t[s] = \left(\frac{A}{\left(\frac{i}{ipickup} \right)^{p} - C} + B \right) \cdot TD$$

(Equation 38)

Further description can be found in the technical reference manual.

tPRCrvx, tTRCrvx, tCRCrvx: Parameters for user programmable of inverse reset time characteristic curve. Further description can be found in the technical reference manual.

7.4.3.2 Common settings for all steps

tx: Definite time delay for step *x*. Used if definite time characteristic is chosen.

AngleRCA: Relay characteristic angle given in degree. This angle is defined as shown in figure 52. The angle is defined positive when the residual current lags the reference voltage (Vpol = $3V_0$ or V_2)

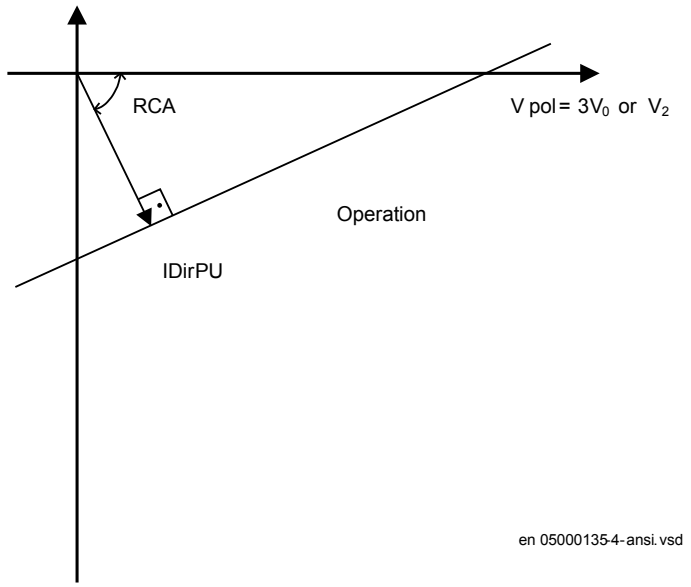

Figure 52: Relay characteristic angle given in degree

In a normal transmission network a normal value of RCA is about 65°. The setting range is -180° to +180°.

polMethod: Defines if the directional polarization is from

- *Voltage* ($3V_0$ or V_2)
- *Current* ($3I_0 \cdot$ ZNpol or $3I_2 \cdot$ZNpol where ZNpol is RNpol + jXNpol), or
- both currents and voltage, *Dual* (dual polarizing, ($3V_0 + 3I_0 \cdot$ ZNpol) or ($V_2 + I_2 \cdot$ ZNpol)).

Normally voltage polarizing from the internally calculated residual sum or an external open delta is used.

Current polarizing is useful when the local source is strong and a high sensitivity is required. In such cases the polarizing voltage ($3V_0$) can be below 1% and it is then necessary to use current polarizing or dual polarizing. Multiply the required set current (primary) with the minimum impedance (ZNpol) and check that the percentage of the phase-to-ground voltage is definitely higher than 1% (minimum $3V_0$>*VPolMin* setting) as a verification.

RNPol, XNPol: The zero-sequence source is set in primary ohms as base for the current polarizing. The polarizing voltage is then achieved as $3I_0 \cdot$ ZNpol. The ZNpol can be defined as $(ZS_1\text{-}ZS_0)/3$, that is the ground return impedance of the source behind the protection. The maximum ground-fault current at the local source can be used to calculate the value of ZN as $V/(\sqrt{3} \cdot 3I_0)$ Typically, the minimum ZNPol (3 · zero sequence source) is set. Setting is in primary ohms.

When the dual polarizing method is used it is important that the setting*Pickupx*or the product $3I_0 \cdot$ ZNpol is not greater than $3V_0$. If so, there is a risk for incorrect operation for faults in the reverse direction.

IPolMin: is the minimum ground-fault current accepted for directional evaluation. For smaller currents than this value the operation will be blocked. Typical setting is 5-10% of *IBase*.

VPolMin: Minimum polarization (reference) polarizing voltage for the directional function, given in % of *VBase*/√3.

IDirPU: Operate residual current release level in % of *IBase* for directional comparison scheme. The setting is given in % of *IBase* and must be set below the lowest *INx*> setting, set for the directional measurement. The output signals, PUFW and PUREV can be used in a teleprotection scheme. The appropriate signal should be configured to the communication scheme block.

7.4.3.3 2nd harmonic restrain

If a power transformer is energized there is a risk that the current transformer core will saturate during part of the period, resulting in a transformer inrush current. This will give a declining residual current in the network, as the inrush current is deviating between the phases. There is a risk that the residual overcurrent function will give an unwanted trip. The inrush current has a relatively large ratio of 2nd harmonic component. This component can be used to create a restrain signal to prevent this unwanted function.

At current transformer saturation a false residual current can be measured by the protection. Also here the 2nd harmonic restrain can prevent unwanted operation.

2ndHarmStab: The rate of 2nd harmonic current content for activation of the 2nd harmonic restrain signal. The setting is given in % of the fundamental frequency residual current.

HarmRestrainx: Enable block of step *x* from the harmonic restrain function.

7.4.3.4 Parallel transformer inrush current logic

In case of parallel transformers there is a risk of sympathetic inrush current. If one of the transformers is in operation, and the parallel transformer is switched in, the asymmetric inrush current of the switched in transformer will cause partial saturation of the transformer already in service. This is called transferred saturation. The 2nd harmonic of the inrush currents of the two transformers will be in phase opposition. The summation of the two currents will thus give a small 2nd harmonic current. The residual fundamental current will however be significant. The inrush current of the transformer in service before the parallel transformer energizing, will be a little delayed compared to the first transformer. Therefore we will have high 2nd harmonic current initially. After a short period this current will however be small and the normal 2nd harmonic blocking will reset.

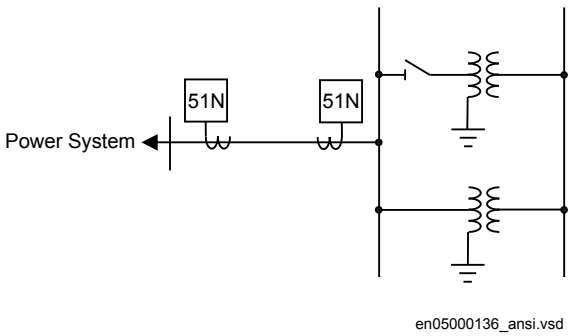

Figure 53: Application for parallel transformer inrush current logic

If the *BlkParTransf* function is activated the 2nd harmonic restrain signal will latch as long as the residual current measured by the relay is larger than a selected step current level. Assume that step 4 is chosen to be the most sensitive step of the four step residual overcurrent protection function EF4PTOC (51N_67N). The harmonic restrain blocking is enabled for this step. Also the same current setting as this step is chosen for the blocking at parallel transformer energizing.

Below the settings for the parallel transformer logic are described.

Use_PUValue: Gives which current level that should be used for activation of the blocking signal. This is given as one of the settings of the steps: Step 1/2/3/4. Normally the step having the lowest operation current level should be set.

BlkParTransf: This parameter can be set *Disable*/*Enable*, the parallel transformer logic.

7.4.3.5 Switch onto fault logic

In case of energizing a faulty object there is a risk of having a long fault clearance time, if the fault current is too small to give fast operation of the protection. The switch on to fault function can be activated from auxiliary signals from the circuit breaker, either the close command or the open/close position (change of position).

This logic can be used to issue fast trip if one breaker pole does not close properly at a manual or automatic closing.

SOTF and Under Time are similar functions to achieve fast clearance at asymmetrical closing based on requirements from different utilities.

The function is divided into two parts. The SOTF function will give operation from step 2 or 3 during a set time after change in the position of the circuit breaker. The SOTF function has a set time delay. The Under Time function, which has 2nd harmonic restrain blocking, will give operation from step 4. The 2nd harmonic restrain will prevent unwanted function in case of transformer inrush current. The Under Time function has a set time delay.

Below the settings for switch on to fault logics are described.

SOTF operation mode: This parameter can be set: *Disabled/SOTF/Under Time/SOTF +Under Time*.

SOTFSel: This setting will select the signal to activate SOTF function; *CB position open/ CB position closed/CB close command*.

tSOTF: Time delay for operation of the SOTF function. The setting range is 0.000 - 60.000 s in step of 0.001 s. The default setting is 0.100 s

StepForSOTF: If this parameter is set on the step 3 pickup signal will be used as current set level. If set disabled step 2 pickup signal will be used as current set level.

t4U: Time interval when the SOTF function is active after breaker closing. The setting range is 0.000 - 60.000 s in step of 0.001 s. The default setting is 1.000 s.

ActUndrTimeSel: Describes the mode to activate the sensitive undertime function. The function can be activated by Circuit breaker position (change) or Circuit breaker command.

tUnderTime: Time delay for operation of the sensitive undertime function. The setting range is 0.000 - 60.000 s in step of 0.001 s. The default setting is 0.300 s

7.4.3.6 Line application example

The Four step residual overcurrent protection EF4PTOC (51N/67N) can be used in different ways. Below is described one application possibility to be used in meshed and effectively grounded systems.

The protection measures the residual current out on the protected line. The protection function has a directional function where the polarizing voltage (zero-sequence voltage) is the polarizing quantity.

The polarizing voltage and current can be internally generated when a three-phase set of voltage transformers and current transformers are used.

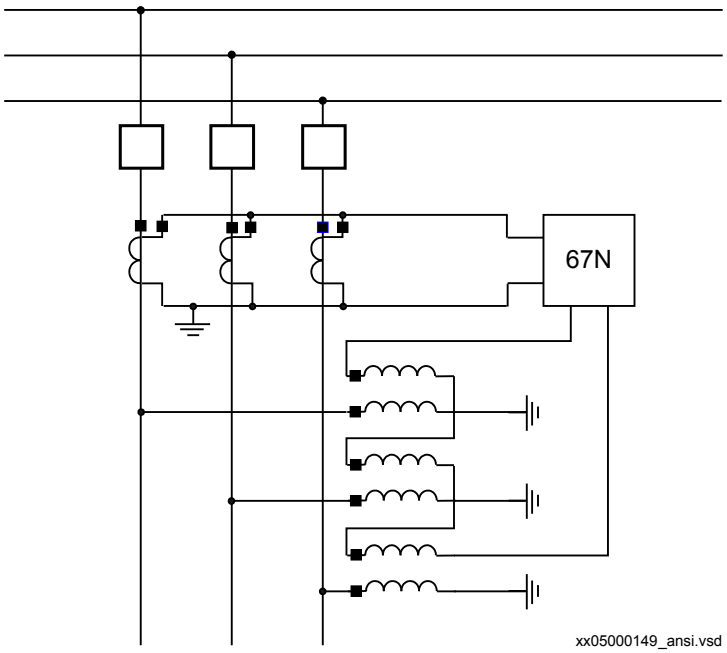

Figure 54: Connection of polarizing voltage from an open (ANSI-broken) delta

The different steps can be described as follows.

Step 1

This step has directional instantaneous function. The requirement is that overreaching of the protected line is not allowed.

One- or two-phase ground-fault

ANSI05000150_2_en.vsd

Figure 55: Step 1, first calculation

The residual current out on the line is calculated at a fault on the remote busbar (one- or two-phase-to-ground fault). To assure selectivity it is required that step 1 shall not give a trip at this fault. The requirement can be formulated according to equation 39.

$$I_{step1} \geq 1.2 \cdot 3I_0 \text{ (remote busbar)}$$

(Equation 39)

As a consequence of the distribution of zero sequence current in the power system, the current to the protection might be larger if one line out from the remote busbar is taken out of service, see figure 56.

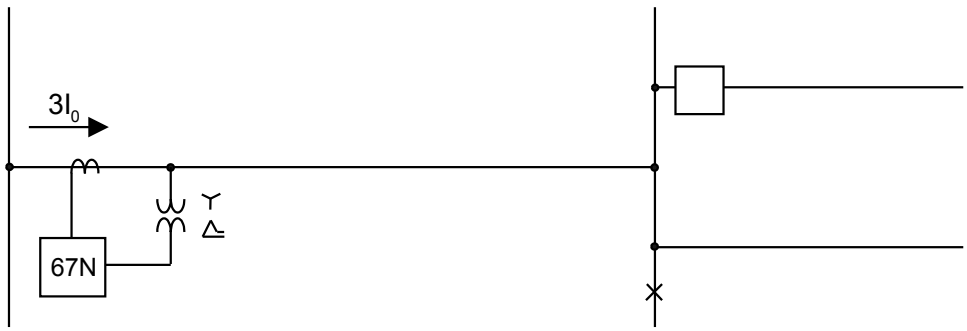

One- or two-phase-ground-fault

en05000151_ansi.vsd

Figure 56: Step 1, second calculation. Remote busbar with, one line taken out of service

The requirement is now according to equation 40.

$$I_{step1} \geq 1.2 \cdot 3I_0 \text{ (remote busbar with one line out)}$$

(Equation 40)

A higher value of step 1 might be necessary if a big power transformer (Y0/D) at remote bus bar is disconnected.

A special case occurs at double circuit lines, with mutual zero-sequence impedance between the parallel lines, see figure 57.

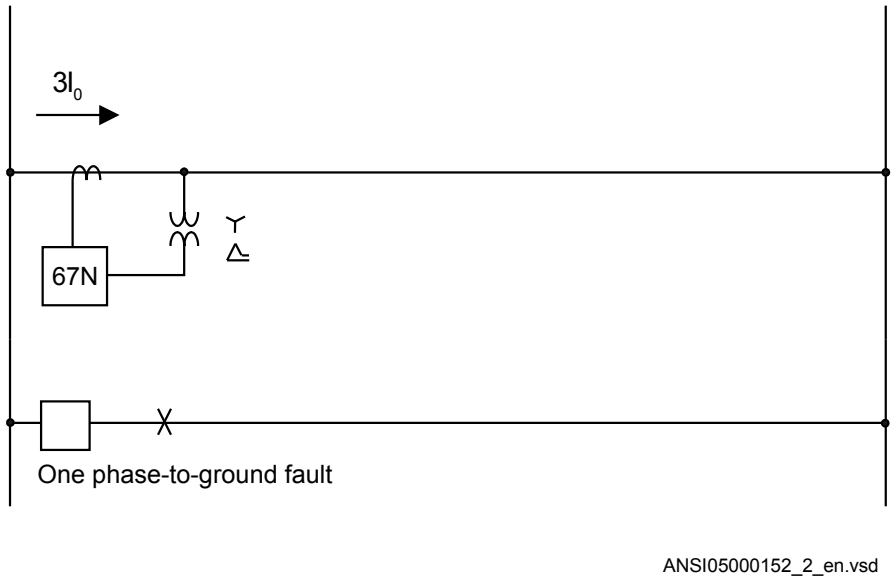

Figure 57: Step 1, third calculation

In this case the residual current out on the line can be larger than in the case of ground fault on the remote busbar.

$$I_{step1} \geq 1.2 \cdot 3I_0$$

(Equation 41)

The current setting for step 1 is chosen as the largest of the above calculated residual currents, measured by the protection.

Step 2

This step has directional function and a short time delay, often about 0.4 s. Step 2 shall securely detect all ground faults on the line, not detected by step 1.

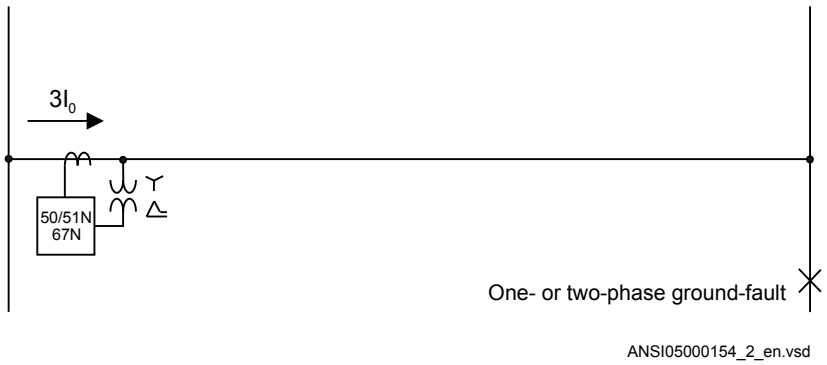

Figure 58: Step 2, check of reach calculation

The residual current, out on the line, is calculated at an operational case with minimal ground-fault current. The requirement that the whole line shall be covered by step 2 can be formulated according to equation 42.

$$I_{step2} \geq 0.7 \cdot 3I_0 \text{ (at remote busbar)}$$

(Equation 42)

To assure selectivity the current setting must be chosen so that step 2 does not operate at step 2 for faults on the next line from the remote substation. Consider a fault as shown in Figure 59.

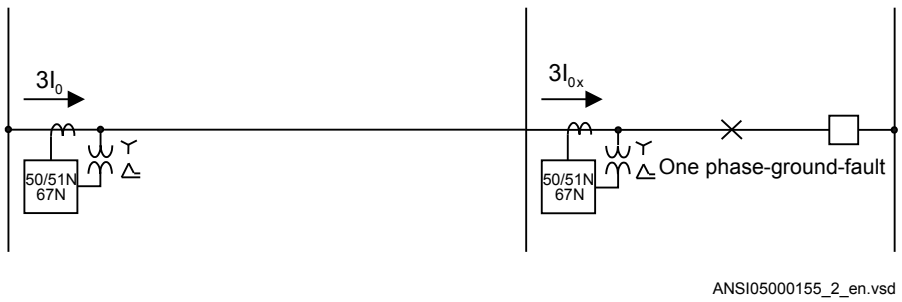

Figure 59: Step 2, selectivity calculation

A second criterion for step 2 is according to equation 43.

$$I_{step2} \geq 1.2 \cdot \frac{3I_0}{3I_{01}} \cdot I_{step1}$$

(Equation 43)

where:

I_{step1} is the current setting for step 1 on the faulted line.

Step 3

This step has directional function and a time delay slightly larger than step 2, often 0.8 s. Step 3 shall enable selective trip of ground faults having higher fault resistance to ground, compared to step 2. The requirement on step 3 is selectivity to other ground-fault protections in the network. One criterion for setting is shown in Figure 60.

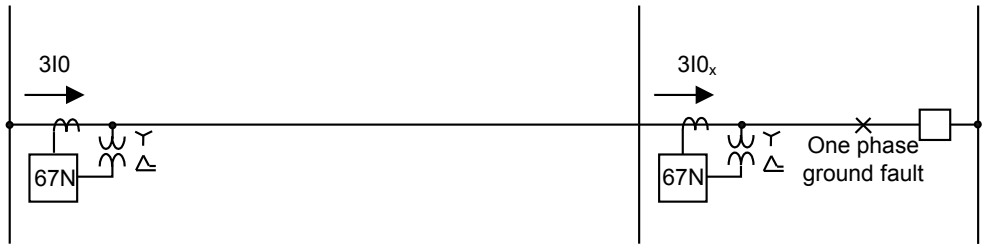

en05000156_ansi.vsd

Figure 60: Step 3, Selectivity calculation

$$I_{step3} \geq 1.2 \cdot \frac{3I_0}{3I_{02}} \cdot I_{step2}$$

(Equation 44)

where:

I_{step2} is the chosen current setting for step 2 on the faulted line.

Step 4

This step normally has non-directional function and a relatively long time delay. The task for step 4 is to detect and initiate trip for ground faults with large fault resistance, for example tree faults. Step 4 shall also detect series faults where one or two poles, of a breaker or other switching device, are open while the other poles are closed.

Both high resistance ground faults and series faults give zero-sequence current flow in the network. Such currents give disturbances on telecommunication systems and current to ground. It is important to clear such faults both concerning personal security as well as risk of fire.

The current setting for step 4 is often set down to about 100 A (primary $3I_0$). In many applications definite time delay in the range 1.2 - 2.0 s is used. In other applications a current dependent inverse time characteristic is used. This enables a higher degree of selectivity also for sensitive ground-fault current protection.

7.5 Four step directional negative phase sequence overcurrent protection NS4PTOC (46I2)

7.5.1 Identification

Function description	IEC 61850 identification	IEC 60617 identification	ANSI/IEEE C37.2 device number
Four step negative sequence overcurrent protection	NS4PTOC	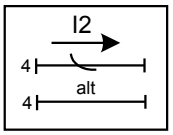	46I2

7.5.2 Application

Four step negative sequence overcurrent protection NS4PTOC (4612) is used in several applications in the power system. Some applications are:

- Ground-fault and phase-phase short circuit protection of feeders in effectively grounded distribution and subtransmission systems. Normally these feeders have radial structure.
- Back-up ground-fault and phase-phase short circuit protection of transmission lines.
- Sensitive ground-fault protection of transmission lines. NS4PTOC (4612) can have better sensitivity to detect resistive phase-to-ground-faults compared to distance protection.
- Back-up ground-fault and phase-phase short circuit protection of power transformers.
- Ground-fault and phase-phase short circuit protection of different kinds of equipment connected to the power system such as shunt capacitor banks, shunt reactors and others.

In many applications several steps with different current pickup levels and time delays are needed. NS4PTOC (4612) can have up to four, individual settable steps. The flexibility of each step of NS4PTOC (4612) function is great. The following options are possible:

Non-directional/Directional function: In some applications the non-directional functionality is used. This is mostly the case when no fault current can be fed from the protected object itself. In order to achieve both selectivity and fast fault clearance, the directional function can be necessary. This can be the case for unsymmetrical fault protection in meshed and effectively grounded transmission systems. The directional negative sequence overcurrent protection is also well suited to operate in teleprotection

communication schemes, which enables fast clearance of unsymmetrical faults on transmission lines. The directional function uses the voltage polarizing quantity.

Choice of time characteristics: There are several types of time characteristics available such as definite time delay and different types of inverse time characteristics. The selectivity between different overcurrent protections is normally enabled by co-ordination between the operating time of the different protections. To enable optimal co-ordination all overcurrent relays, to be co-ordinated against each other, should have the same time characteristic. Therefore a wide range of standardized inverse time characteristics are available: IEC and ANSI.

Table 15: Inverse time characteristics

Curve name
ANSI Extremely Inverse
ANSI Very Inverse
ANSI Normal Inverse
ANSI Moderately Inverse
ANSI/IEEE Definite time
ANSI Long Time Extremely Inverse
ANSI Long Time Very Inverse
ANSI Long Time Inverse
IEC Normal Inverse
IEC Very Inverse
IEC Inverse
IEC Extremely Inverse
IEC Short Time Inverse
IEC Long Time Inverse
IEC Definite Time
User Programmable
ASEA RI
RXIDG (logarithmic)

There is also a user programmable inverse time characteristic.

Normally it is required that the negative sequence overcurrent function shall reset as fast as possible when the current level gets lower than the operation level. In some cases some sort of delayed reset is required. Therefore different kinds of reset characteristics can be used.

For some protection applications there can be a need to change the current pickup level for some time. Therefore there is a possibility to give a setting of a multiplication factor

MultPUx to the negative sequence current pick-up level. This multiplication factor is activated from a binary input signal MULTPUx to the function.

7.5.3 Setting guidelines

The parameters for Four step negative sequence overcurrent protection NS4PTOC (46I2) are set via the local HMI or Protection and Control Manager (PCM600).

The following settings can be done for the four step negative sequence overcurrent protection:

Operation: Sets the protection to *Enabled* or *Disabled*.

Common base IED values for primary current (*IBase*), primary voltage (*VBase*) and primary power (*SBase*) are set in Global base values for settings function GBASVAL. *GlobalBaseSel*: It is used to select a GBASVAL function for reference of base values.

When inverse time overcurrent characteristic is selected, the operate time of the stage will be the sum of the inverse time delay and the set definite time delay. Thus, if only the inverse time delay is required, it is of utmost importance to set the definite time delay for that stage to zero.

7.5.3.1 Settings for each step

x means step 1, 2, 3 and 4.

DirModeSelx: The directional mode of step x. Possible settings are off/nondirectional/forward/reverse.

Characteristx: Selection of time characteristic for step *x*. Definite time delay and different types of inverse time characteristics are available.

Table 16: Inverse time characteristics

Curve name
ANSI Extremely Inverse
ANSI Very Inverse
ANSI Normal Inverse
ANSI Moderately Inverse
ANSI/IEEE Definite time
ANSI Long Time Extremely Inverse
Table continues on next page

Curve name
ANSI Long Time Very Inverse
ANSI Long Time Inverse
IEC Normal Inverse
IEC Very Inverse
IEC Inverse
IEC Extremely Inverse
IEC Short Time Inverse
IEC Long Time Inverse
IEC Definite Time
User Programmable
ASEA RI
RXIDG (logarithmic)

The different characteristics are described in the Technical Reference Manual (TRM).

Pickupx: Operation negative sequence current level for step x given in % of *IBase*.

tx: Definite time delay for step x. Used if definite time characteristic is chosen.

TDx: Time multiplier for the dependent (inverse) characteristic.

IMinx: Minimum operate current for step x in % of *IBase*. Set *IMinx* below *Pickupx* for every step to achieve ANSI reset characteristic according to standard. If *IMinx* is set above *Pickupx* for any step the ANSI reset works as if current is zero when current drops below *IMinx*.

MultPUx: Multiplier for scaling of the current setting value. If a binary input signal (ENMULTx) is activated the current operation level is multiplied by this setting constant.

txMin: Minimum operation time for inverse time characteristics. At high currents the inverse time characteristic might give a very short operation time. By setting this parameter the operation time of the step can never be shorter than the setting.

ResetTypeCrvx: The reset of the delay timer can be made in different ways. By choosing setting there are the following possibilities:

Curve name
Instantaneous
IEC Reset (constant time)
ANSI Reset (inverse time)

The different reset characteristics are described in the Technical Reference Manual (TRM). There are some restrictions regarding the choice of reset delay.

For the independent time delay characteristics the possible delay time settings are instantaneous (1) and IEC (2 = set constant time reset).

For ANSI inverse time delay characteristics all three types of reset time characteristics are available; instantaneous (1), IEC (2 = set constant time reset) and ANSI (3 = current dependent reset time).

For IEC inverse time delay characteristics the possible delay time settings are instantaneous (1) and IEC (2 = set constant time reset).

For the programmable inverse time delay characteristics all three types of reset time characteristics are available; instantaneous (1), IEC (2 = set constant time reset) and ANSI (3 = current dependent reset time). If the current dependent type is used settings *pr*, *tr* and *cr* must be given.

tPCrvx, *tACrvx*, *tBCrvx*, *tCCrvx*: Parameters for programmable inverse time characteristic curve (Curve type = 17). The time characteristic equation is according to equation 38:

$$t[s] = \left(\frac{A}{\left(\frac{i}{ipickup} \right)^{p} - C} + B \right) \cdot TD$$

(Equation 45)

Further description can be found in the Technical reference manual (TRM).

tPRCrvx, tTRCrvx, tCRCrvx: Parameters for programmable inverse reset time characteristic curve. Further description can be found in the Technical reference manual (TRM).

7.5.3.2 Common settings for all steps

x means step 1, 2, 3 and 4.

AngleRCA: Relay characteristic angle given in degrees. This angle is defined as shown in figure 52. The angle is defined positive when the residual current lags the reference voltage (Vpol = -)

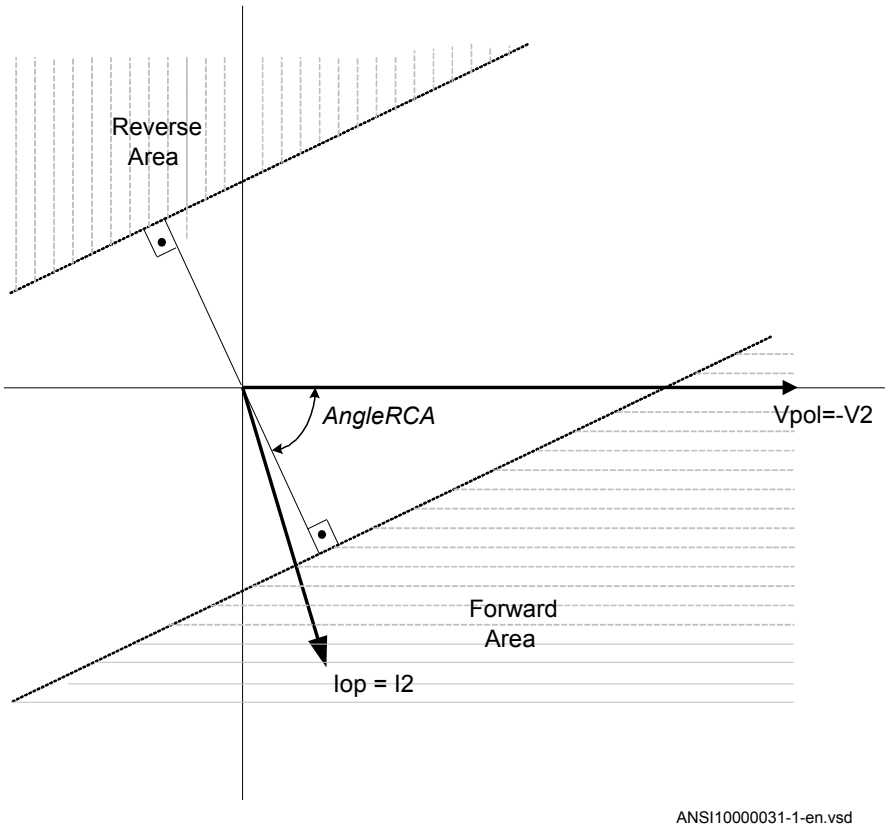

Figure 61: Relay characteristic angle given in degree

In a transmission network a normal value of RCA is about 80°.

VPolMin: Minimum polarization (reference) voltage % of *VBase*.

I>Dir: Operate residual current level for directional comparison scheme. The setting is given in % of *IBase*. The pickup forward or pickup reverse signals can be used in a communication scheme. The appropriate signal must be configured to the communication scheme block.

7.6 Sensitive directional residual overcurrent and power protection SDEPSDE (67N)

7.6.1 Identification

Function description	IEC 61850 identification	IEC 60617 identification	ANSI/IEEE C37.2 device number
Sensitive directional residual over current and power protection	SDEPSDE	-	67N

7.6.2 Application

In networks with high impedance grounding, the phase-to-ground fault current is significantly smaller than the short circuit currents. Another difficulty for ground fault protection is that the magnitude of the phase-to-ground fault current is almost independent of the fault location in the network.

Directional residual current can be used to detect and give selective trip of phase-to-ground faults in high impedance grounded networks. The protection uses the residual current component $3I_0 \cdot \cos \varphi$, where φ is the angle between the residual current and the residual voltage ($-3V_0$), compensated with a characteristic angle. Alternatively, the function can be set to strict $3I_0$ level with a check of angle φ.

Directional residual power can also be used to detect and give selective trip of phase-to-ground faults in high impedance grounded networks. The protection uses the residual power component $3I_0 \cdot 3V_0 \cdot \cos \varphi$, where φ is the angle between the residual current and the reference residual voltage, compensated with a characteristic angle.

A normal non-directional residual current function can also be used with definite or inverse time delay.

A backup neutral point voltage function is also available for non-directional residual overvoltage protection.

In an isolated network, that is, the network is only coupled to ground via the capacitances between the phase conductors and ground, the residual current always has -90º phase shift compared to the residual voltage ($3V_0$). The characteristic angle is chosen to -90º in such a network.

In resistance grounded networks or in Petersen coil grounded, with a parallel resistor, the active residual current component (in phase with the residual voltage) should be used for the ground fault detection. In such networks, the characteristic angle is chosen to 0º.

As the magnitude of the residual current is independent of the fault location, the selectivity of the ground fault protection is achieved by time selectivity.

When should the sensitive directional residual overcurrent protection be used and when should the sensitive directional residual power protection be used? Consider the following:

- Sensitive directional residual overcurrent protection gives possibility for better sensitivity. The setting possibilities of this function are down to 0.25 % of IBase, 1 A or 5 A. This sensitivity is in most cases sufficient in high impedance network applications, if the measuring CT ratio is not too high.
- Sensitive directional residual power protection gives possibility to use inverse time characteristics. This is applicable in large high impedance grounded networks, with large capacitive ground fault currents. In such networks, the active fault current would be small and by using sensitive directional residual power protection, the operating quantity is elevated. Therefore, better possibility to detect ground faults. In addition, in low impedance grounded networks, the inverse time characteristic gives better time-selectivity in case of high zero-resistive fault currents.

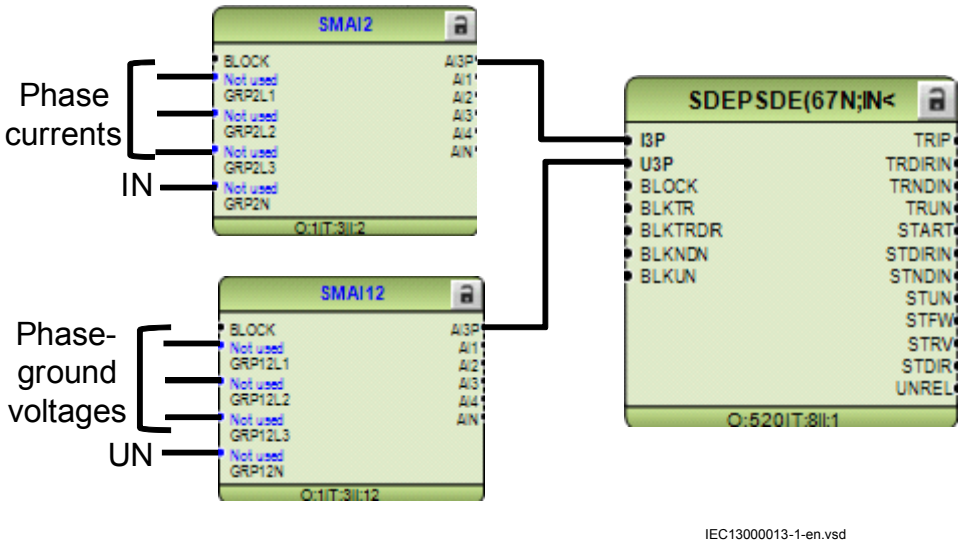

Figure 62: Connection of SDEPSDE to analog preprocessing function block

Overcurrent functionality uses true 3I0, i.e. sum of GRPxL1, GRPxL2 and GRPxL3. For 3I0 to be calculated, connection is needed to all three phase inputs.

Directional and power functionality uses IN and UN. If a connection is made to GRPxN this signal is used, else if connection is made to all inputs GRPxL1, GRPxL2 and GRPxL3 the internally calculated sum of these inputs (3I0 and 3U0) will be used.

7.6.3 Setting guidelines

The sensitive ground-fault protection is intended to be used in high impedance grounded systems, or in systems with resistive grounding where the neutral point resistor gives an ground-fault current larger than what normal high impedance gives but smaller than the phase to phase short circuit current.

In a high impedance system the fault current is assumed to be limited by the system zero sequence shunt impedance to ground and the fault resistance only. All the series impedances in the system are assumed to be zero.

In the setting of ground-fault protection, in a high impedance grounded system, the neutral point voltage (zero sequence voltage) and the ground-fault current will be calculated at the desired sensitivity (fault resistance). The complex neutral point voltage (zero sequence) can be calculated as:

$$V_0 = \frac{V_{phase}}{1 + \frac{3 \cdot R_f}{Z_0}}$$

(Equation 46)

Where

V_{phase} is the phase voltage in the fault point before the fault,

R_f is the resistance to ground in the fault point and

Z_0 is the system zero sequence impedance to ground

The fault current, in the fault point, can be calculated as:

$$I_j = 3I_0 = \frac{3 \cdot V_{phase}}{Z_0 + 3 \cdot R_f}$$

(Equation 47)

The impedance Z_0 is dependent on the system grounding. In an isolated system (without neutral point apparatus) the impedance is equal to the capacitive coupling between the phase conductors and ground:

$$Z_0 = -jX_c = -j\frac{3 \cdot V_{phase}}{I_j}$$

(Equation 48)

Where

I_j is the capacitive ground fault current at a non-resistive phase-to-ground fault

X_c is the capacitive reactance to ground

In a system with a neutral point resistor (resistance grounded system) the impedance Z_0 can be calculated as:

$$Z_0 = \frac{-jX_c \cdot 3R_n}{-jX_c + 3R_n}$$

(Equation 49)

Where

R_n is the resistance of the neutral point resistor

In many systems there is also a neutral point reactor (Petersen coil) connected to one or more transformer neutral points. In such a system the impedance Z_0 can be calculated as:

$$Z_0 = -jX_c // 3R_n // j3X_n = \frac{9R_n X_n X_c}{3X_n X_c + j3R_n \cdot \left(3X_n - X_c\right)}$$

(Equation 50)

Where

X_n is the reactance of the Petersen coil. If the Petersen coil is well tuned we have $3X_n = X_c$ In this case the impedance Z_0 will be: $Z_0 = 3R_n$

Now consider a system with an grounding via a resistor giving higher ground fault current than the high impedance grounding. The series impedances in the system can no longer be neglected. The system with a single phase to ground fault can be described as in Figure 63.

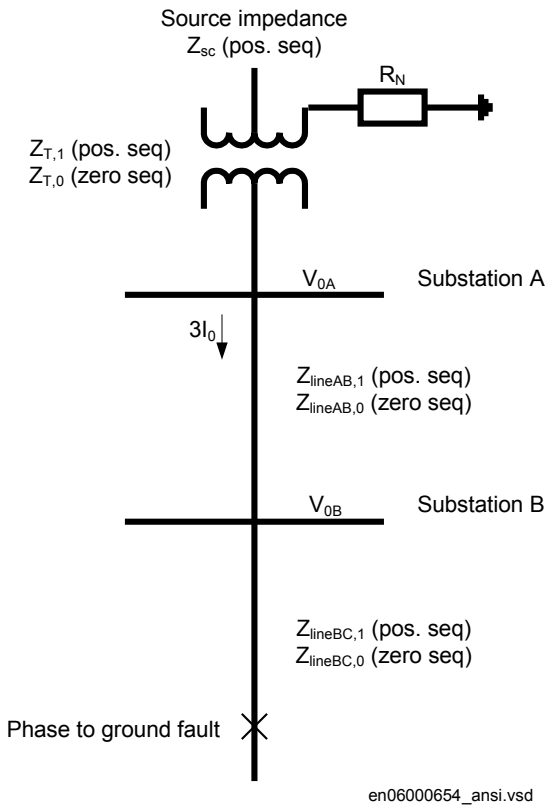

Figure 63: Equivalent of power system for calculation of setting

The residual fault current can be written:

$$3I_0 = \frac{3V_{phase}}{2 \cdot Z_1 + Z_0 + 3 \cdot R_f}$$

(Equation 51)

Where

V_{phase} is the phase voltage in the fault point before the fault

Z_1 is the total positive sequence impedance to the fault point. $Z_1 = Z_{sc}+Z_{T,1}+Z_{lineAB,1}+Z_{lineBC,1}$

Z_0 is the total zero sequence impedance to the fault point. $Z_0 = Z_{T,0}+3R_N+Z_{lineAB,0}+Z_{lineBC,0}$

R_f is the fault resistance.

The residual voltages in stations A and B can be written:

$$V_{0A} = 3I_0 \cdot (Z_{T,0} + 3R_N)$$

(Equation 52)

$$V_{OB} = 3I_0 \cdot (Z_{T,0} + 3R_N + Z_{lineAB,0})$$

(Equation 53)

The residual power, measured by the sensitive ground fault protections in A and B will be:

$$S_{0A} = 3V_{0A} \cdot 3I_0$$

(Equation 54)

$$S_{0B} = 3V_{0B} \cdot 3I_0$$

(Equation 55)

The residual power is a complex quantity. The protection will have a maximum sensitivity in the characteristic angle RCA. The apparent residual power component in the characteristic angle, measured by the protection, can be written:

$$S_{0A,prot} = 3V_{0A} \cdot 3I_0 \cdot \cos\varphi_A$$

(Equation 56)

$$S_{0B,prot} = 3V_{0B} \cdot 3I_0 \cdot \cos\varphi_B$$

(Equation 57)

The angles φ_A and φ_B are the phase angles between the residual current and the residual voltage in the station compensated with the characteristic angle RCA.

The protection will use the power components in the characteristic angle direction for measurement, and as base for the inverse time delay.

The inverse time delay is defined as:

$$t_{inv} = \frac{TDSN \cdot (3I_0 \cdot 3V_0 \cdot \cos\phi(\text{reference}))}{3I_0 \cdot 3V_0 \cos\phi(\text{measured})}$$

(Equation 58)

The function can be set *Enabled/Disabled* with the setting of *Operation*.

GlobalBaseSel: It is used to select a GBASVAL function for reference of base values.

RotResU: It is a setting for rotating the polarizing quantity ($3V_0$) by 0 or 180 degrees. This parameter is set to 180 degrees by default in order to inverse the residual voltage ($3V_0$) to calculate the reference voltage ($-3V_0\ e^{-jRCADir}$). Since the reference voltage is used as the polarizing quantity for directionality, it is important to set this parameter correctly.

With the setting *OpModeSel* the principle of directional function is chosen.

With *OpModeSel* set to *3I0cosfi* the current component in the direction equal to the characteristic angle*RCADir* has the maximum sensitivity. The characteristic for *RCADir* is equal to 0° is shown in Figure 64.

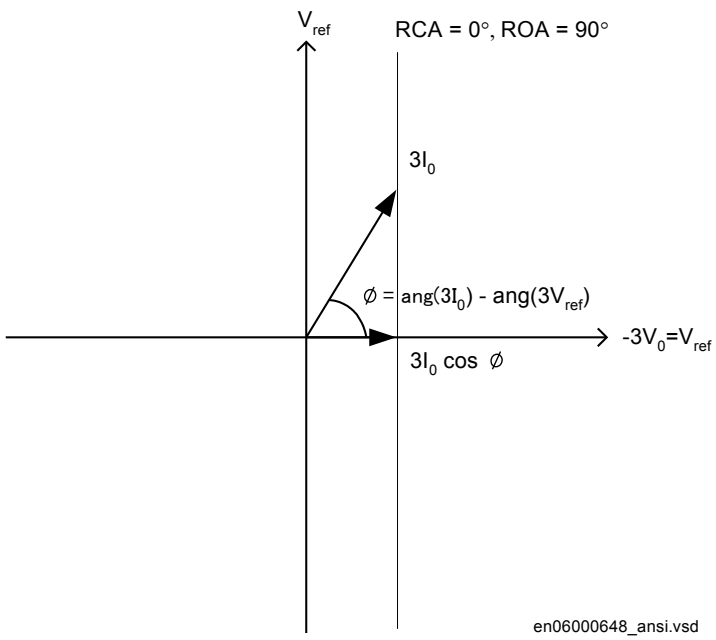

Figure 64: Characteristic for RCADir equal to 0°

The characteristic is for *RCADir* equal to -90° is shown in Figure 65.

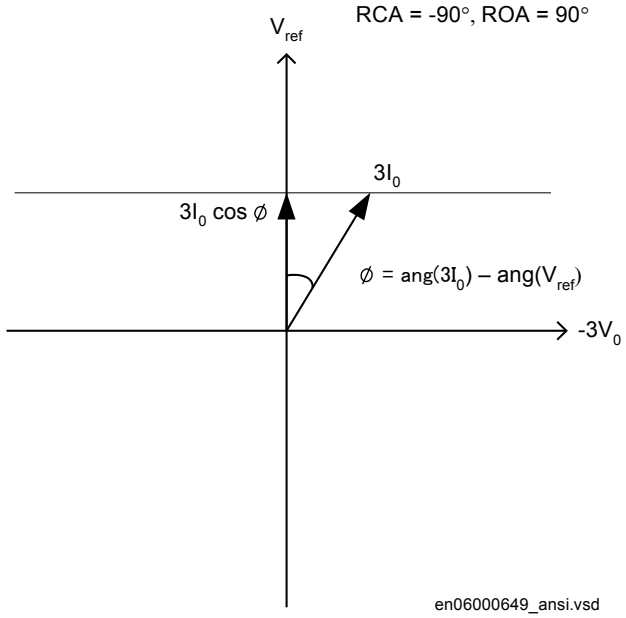

Figure 65: Characteristic for RCADir equal to -90°

When *OpModeSel* is set to *3I03V0Cosfi* the apparent residual power component in the direction is measured.

When *OpModeSel* is set to *3I0 and fi* the function will operate if the residual current is larger than the setting *INDirPU* and the residual current angle is within the sector *RCADir* ± *ROADir*.

The characteristic for this *OpModeSel* when *RCADir* = 0° and *ROADir* = 80° is shown in figure 66.

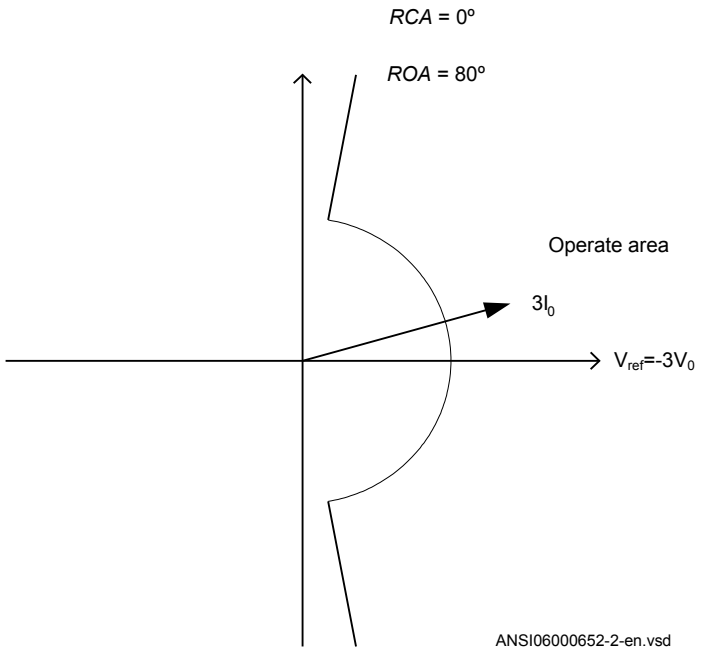

Figure 66: Characteristic for RCADir = 0° and ROADir = 80°

DirMode is set *Forward* or *Reverse* to set the direction of the operation for the directional function selected by the *OpModeSel*.

All the directional protection modes have a residual current release level setting *INRelPU* which is set in % of *IBase*. This setting should be chosen smaller than or equal to the lowest fault current to be detected.

All the directional protection modes have a residual voltage release level setting *VNRelPU* which is set in % of *VBase*. This setting should be chosen smaller than or equal to the lowest fault residual voltage to be detected.

tDef is the definite time delay, given in s, for the directional residual current protection.

tReset is the time delay before the definite timer gets reset, given in s. With a *tReset* time of few cycles, there is an increased possibility to clear intermittent ground faults correctly. The setting shall be much shorter than the set trip delay. In case of intermittent ground faults, the fault current is intermittently dropping below the set value during consecutive cycles. Therefore the definite timer should continue for a certain time equal to *tReset* even though the fault current has dropped below the set value.

The characteristic angle of the directional functions *RCADir* is set in degrees. *RCADir* is normally set equal to 0° in a high impedance grounded network with a neutral point resistor as the active current component is appearing out on the faulted feeder only. *RCADir* is set equal to -90° in an isolated network as all currents are mainly capacitive.

ROADir is Relay Operating Angle. *ROADir* is identifying a window around the reference direction in order to detect directionality. *ROADir* is set in degrees. For angles differing more than *ROADir* from *RCADir* the function is blocked. The setting can be used to prevent unwanted operation for non-faulted feeders, with large capacitive ground fault current contributions, due to CT phase angle error.

INCosPhiPU is the operate current level for the directional function when *OpModeSel* is set *3I0Cosfi*. The setting is given in % of *IBase*. The setting should be based on calculation of the active or capacitive ground fault current at required sensitivity of the protection.

SN_PU is the operate power level for the directional function when *OpModeSel* is set *3I03V0Cosfi*. The setting is given in % of *SBase*. The setting should be based on calculation of the active or capacitive ground fault residual power at required sensitivity of the protection.

The input transformer for the Sensitive directional residual over current and power protection function has the same short circuit capacity as the phase current transformers. Hence, there is no specific requirement for the external CT core, i.e. any CT core can be used.

If the time delay for residual power is chosen the delay time is dependent on two setting parameters. *SRef* is the reference residual power, given in % of *SBase*. *TDSN* is the time multiplier. The time delay will follow the following expression:

$$t_{inv} = \frac{TDSN \cdot Sref}{3I_0 \cdot 3V_0 \cdot \cos\varphi(measured)}$$

(Equation 59)

INDirPU is the operate current level for the directional function when *OpModeSel* is set *3I0 and fi*. The setting is given in % of *IBase*. The setting should be based on calculation of the ground fault current at required sensitivity of the protection.

OpINNonDir is set *Enabled* to activate the non-directional residual current protection.

INNonDirPU is the operate current level for the non-directional function. The setting is given in % of *IBase*. This function can be used for detection and clearance of cross-country faults in a shorter time than for the directional function. The current setting should be larger than the maximum single-phase residual current on the protected line.

TimeChar is the selection of time delay characteristic for the non-directional residual current protection. Definite time delay and different types of inverse time characteristics are available:

Table 17: Inverse time characteristics

Curve name
ANSI Extremely Inverse
ANSI Very Inverse
ANSI Normal Inverse
ANSI Moderately Inverse
ANSI/IEEE Definite time
ANSI Long Time Extremely Inverse
ANSI Long Time Very Inverse
ANSI Long Time Inverse
IEC Normal Inverse
IEC Very Inverse
IEC Inverse
IEC Extremely Inverse
IEC Short Time Inverse
IEC Long Time Inverse
IEC Definite Time
User Programmable
ASEA RI
RXIDG (logarithmic)

See chapter “Inverse time characteristics” in Technical Manual for the description of different characteristics

tPCrv, tACrv, tBCrv, tCCrv: Parameters for customer creation of inverse time characteristic curve (Curve type = 17). The time characteristic equation is:

$$t[s] = \left(\frac{A}{\left(\frac{i}{Pickup\_N} \right)^{p} - C} + B \right) \cdot InMult$$

(Equation 60)

tINNonDir is the definite time delay for the non directional ground fault current protection, given in s.

OpVN is set *Enabled* to activate the trip function of the residual over voltage protection.

tVN is the definite time delay for the trip function of the residual voltage protection, given in s.

7.7 Thermal overload protection, one time constant Fahrenheit/Celsius LFPTTR/LCPTTR (26)

7.7.1 Identification

Function description	IEC 61850 identification	IEC 60617 identification	ANSI/IEEE C37.2 device number
Thermal overload protection, one time constant, Fahrenheit	LFPTTR		26
Thermal overload protection, one time constant, Celsius	LCPTTR		26

7.7.2 Application

Lines and cables in the power system are designed for a certain maximum load current level. If the current exceeds this level the losses will be higher than expected. As a consequence the temperature of the conductors will increase. If the temperature of the lines and cables reaches too high values the equipment might be damaged:

- The sag of overhead lines can reach unacceptable value.
- If the temperature of conductors, for example aluminium conductors, gets too high the material will be destroyed.
- In cables the insulation can be damaged as a consequence of the overtemperature. As a consequence of this phase to phase or phase to ground faults can occur.

In stressed situations in the power system it can be required to overload lines and cables for a limited time. This should be done while managing the risks safely.

The thermal overload protection provides information that makes a temporary overloading of cables and lines possible. The thermal overload protection estimates the conductor temperature continuously, in Celsius or Fahrenheit depending on whether LFPTTR or LCPTTR (26) is chosen. This estimation is made by using a thermal model of the line/cable based on the current measurement.

If the temperature of the protected object reaches a set warning level *AlarmTemp*, a signal ALARM can be given to the operator. This enables actions in the power system to be taken before dangerous temperatures are reached. If the temperature continues to increase to the trip value *TripTemp*, the protection initiates trip of the protected line.

7.7.3 Setting guideline

The parameters for the Thermal overload protection, one time constant, Fahrenheit/Celsius LFPTTR/LCPTTR (26) are set via the local HMI or PCM600.

The following settings can be done for the thermal overload protection.

Operation: *Disabled*/*Enabled*

GlobalBaseSel is used to select a GBASVAL function for reference of base values, primary current (*IBase*), primary voltage (*UBase*) and primary power (*SBase*).

Imult: Enter the number of lines in case the protection function is applied on multiple parallel lines sharing one CT.

IRef: Reference, steady state current, given in % of *IBase* that will give a steady state (end) temperature rise *TRef*. It is suggested to set this current to the maximum steady state current allowed for the line/cable under emergency operation (a few hours per year).

TRef: Reference temperature rise (end temperature) corresponding to the steady state current *IRef*. From cable manuals current values with corresponding conductor temperature are often given. These values are given for conditions such as ground temperature, ambient air temperature, way of laying of cable and ground thermal resistivity. From manuals for overhead conductor temperatures and corresponding current is given.

Tau: The thermal time constant of the protected circuit given in minutes. Please refer to manufacturers manuals for details.

TripTemp: Temperature value for trip of the protected circuit. For cables, a maximum allowed conductor temperature is often stated to be 190°F (88°C). For overhead lines, the critical temperature for aluminium conductor is about 190-210°F (88-99°C). For a copper conductor a normal figure is 160°F (71°C).

AlarmTemp: Temperature level for alarm of the protected circuit. ALARM signal can be used as a warning before the circuit is tripped. Therefore the setting shall be lower than the trip level. It shall at the same time be higher than the maximum conductor temperature at normal operation. For cables this level is often given to 150°F (66°C). Similar values are stated for overhead lines. A suitable setting can be about 60°F (16°C) below the trip value.

ReclTemp: Temperature where lockout signal LOCKOUT from the protection is released. When the thermal overload protection trips a lock-out signal is activated. This signal is intended to block switch in of the protected circuit as long as the conductor temperature is high. The signal is released when the estimated temperature is below the set value. This temperature value should be chosen below the alarm temperature.

7.8 Thermal overload protection, two time constants TRPTTR (49)

7.8.1 Identification

Function description	IEC 61850 identification	IEC 60617 identification	ANSI/IEEE C37.2 device number
Thermal overload protection, two time constants	TRPTTR	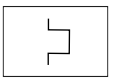	49

7.8.2 Application

Transformers in the power system are designed for a certain maximum load current (power) level. If the current exceeds this level the losses will be higher than expected. As a consequence the temperature of the transformer will increase. If the temperature of the transformer reaches too high a value, the equipment might be damaged;

- The insulation within the transformer experiences forced ageing. As a consequence of this, the risk of internal phase-to-phase or phase-to-ground faults increases.
- There might be hot spots within the transformer, which degrades the paper insulation. It might also cause bubbling in the transformer oil.

In stressed situations in the power system it can be required to overload transformers for a limited time. This should be done without the above mentioned risks. The thermal overload protection provides information and makes temporary overloading of transformers possible.

The permissible load level of a power transformer is highly dependent on the cooling system of the transformer. There are two main principles:

- OA: The air is naturally circulated to the coolers without fans and the oil is naturally circulated without pumps.
- FOA: The coolers have fans to force air for cooling and pumps to force the circulation of the transformer oil.

The protection can have two sets of parameters, one for non-forced cooling and one for forced cooling. Both the permissive steady state loading level as well as the thermal time constant is influenced by the cooling system of the transformer. The two parameters sets can be activated by the binary input signal COOLING. This can be used for transformers where forced cooling can be taken out of operation, for example at fan or pump faults.

The thermal overload protection estimates the internal heat content of the transformer (temperature) continuously. This estimation is made by using a thermal model of the transformer which is based on current measurement.

If the heat content of the protected transformer reaches a set alarm level a signal can be given to the operator. Two alarm levels are available. This enables preventive actions in the power system to be taken before dangerous temperatures are reached. If the temperature continues to increase to the trip value, the protection initiates a trip of the protected transformer.

After tripping by the thermal overload protection, the transformer will cool down over time. There will be a time gap before the heat content (temperature) reaches such a level so that the transformer can be taken into service again. Therefore, the function will continue to estimate the heat content using a set cooling time constant. Energizing of the transformer can be blocked until the heat content has reached a set level.

7.8.3 Setting guideline

The parameters for the thermal overload protection, two time constants (TRPTTR, 49) are set via the local HMI or Protection and Control IED Manager (PCM600).

The following settings can be done for the thermal overload protection:

Operation: *Disabled*/*Enabled*

Operation: Sets the mode of operation. *Disabled* switches off the complete function.

GlobalBaseSel: Selects the global base value group used by the function to define (IBase), (UBase) and (SBase).

IRef: Reference level of the current given in % of *IBase*. When the current is equal to *IRef* the final (steady state) heat content is equal to 1. It is suggested to give a setting corresponding to the rated current of the transformer winding.

IRefMult: If a binary input ENMULT is activated the reference current value can be multiplied by the factor *IRefMult*. The activation could be used in case of deviating ambient temperature from the reference value. In the standard for loading of a transformer an ambient temperature of 20°C is used. For lower ambient temperatures the load ability is increased and vice versa. *IRefMult* can be set within a range: 0.01 - 10.00.

IBase1: Base current for setting given as percentage of *IBase*. This setting shall be related to the status with no COOLING input. It is suggested to give a setting corresponding to the rated current of the transformer with natural cooling (OA).

IBase2: Base current for setting given as percentage of *IBase*. This setting shall be related to the status with activated COOLING input. It is suggested to give a setting corresponding to the rated current of the transformer with forced cooling (FOA). If the transformer has no forced cooling *IBase2* can be set equal to *IBase1*.

Tau1: The thermal time constant of the protected transformer, related to *IBase1* (no cooling) given in minutes.

Tau2: The thermal time constant of the protected transformer, related to *IBase2* (with cooling) given in minutes.

The thermal time constant should be obtained from the transformer manufacturers manuals. The thermal time constant is dependent on the cooling and the amount of oil. Normal time constants for medium and large transformers (according to IEC 60076-7) are about 2.5 hours for naturally cooled transformers and 1.5 hours for forced cooled transformers.

The time constant can be estimated from measurements of the oil temperature during a cooling sequence (described in IEC 60076-7). It is assumed that the transformer is operated at a certain load level with a constant oil temperature (steady state operation). The oil temperature above the ambient temperature is $\Delta\Theta_{o0}$. Then the transformer is disconnected from the grid (no load). After a time t of at least 30 minutes the temperature of the oil is measured again. Now the oil temperature above the ambient temperature is $\Delta\Theta_{ot}$. The thermal time constant can now be estimated as:

$$\tau = \frac{t}{\ln \Delta\Theta_{o0} - \ln \Delta\Theta_{ot}}$$

(Equation 61)

If the transformer has forced cooling (FOA) the measurement should be made both with and without the forced cooling in operation, giving *Tau2* and *Tau1*.

The time constants can be changed if the current is higher than a set value or lower than a set value. If the current is high it is assumed that the forced cooling is activated while it

is deactivated at low current. The setting of the parameters below enables automatic adjustment of the time constant.

Tau1High: Multiplication factor to adjust the time constant *Tau1* if the current is higher than the set value *IHighTau1*. *IHighTau1* is set in % of *IBase1*.

Tau1Low: Multiplication factor to adjust the time constant *Tau1* if the current is lower than the set value *ILowTau1*. *ILowTau1* is set in % of *IBase1*.

Tau2High: Multiplication factor to adjust the time constant *Tau2* if the current is higher than the set value *IHighTau2*. *IHighTau2* is set in % of *IBase2*.

Tau2Low: Multiplication factor to adjust the time constant *Tau2* if the current is lower than the set value *ILowTau2*. *ILowTau2* is set in % of *IBase2*.

The possibility to change time constant with the current value as the base can be useful in different applications. Below some examples are given:

- In case a total interruption (low current) of the protected transformer all cooling possibilities will be inactive. This can result in a changed value of the time constant.
- If other components (motors) are included in the thermal protection, there is a risk of overheating of that equipment in case of very high current. The thermal time constant is often smaller for a motor than for the transformer.

ITrip: The steady state current that the transformer can withstand. The setting is given in % of *IBase1* or *IBase2*.

Alarm1: Heat content level for activation of the signal ALARM1. ALARM1 is set in % of the trip heat content level.

Alarm2: Heat content level for activation of the output signal ALARM2. ALARM2 is set in % of the trip heat content level.

LockoutReset: Lockout release level of heat content to release the lockout signal. When the thermal overload protection trips a lock-out signal is activated. This signal is intended to block switching on of the protected circuit transformer as long as the transformer temperature is high. The signal is released when the estimated heat content is below the set value. This temperature value should be chosen below the alarm temperature. *LockoutReset* is set in % of the trip heat content level.

ThetaInit: Heat content before activation of the function. This setting can be set a little below the alarm level. If the transformer is loaded before the activation of the protection function, its temperature can be higher than the ambient temperature. The start point given in the setting will prevent risk of no trip at overtemperature during the first moments after activation. *ThetaInit:* is set in % of the trip heat content level.

Warning: If the calculated time to trip factor is below the setting *Warning* a warning signal is activated. The setting is given in minutes.

7.9 Breaker failure protection 3-phase activation and output CCRBRF (50BF)

7.9.1 Identification

Function description	IEC 61850 identification	IEC 60617 identification	ANSI/IEEE C37.2 device number
Breaker failure protection, 3-phase activation and output	CCRBRF	*3I>BF*	50BF

7.9.2 Application

In the design of the fault clearance system the N-1 criterion is often used. This means that a fault needs to be cleared even if any component in the fault clearance system is faulty. One necessary component in the fault clearance system is the circuit breaker. It is from practical and economical reason not feasible to duplicate the circuit breaker for the protected component. Instead a breaker failure protection is used.

Breaker failure protection, 3-phase activation and output (CCRBRF, 50BF) will issue a back-up trip command to adjacent circuit breakers in case of failure to trip of the “normal” circuit breaker for the protected component. The detection of failure to break the current through the breaker is made by means of current measurement or as detection of remaining trip signal (unconditional).

CCRBRF (50BF) can also give a re-trip. This means that a second trip signal is sent to the protected circuit breaker. The re-trip function can be used to increase the probability of operation of the breaker, or it can be used to avoid back-up trip of many breakers in case of mistakes during relay maintenance and test.

7.9.3 Setting guidelines

The parameters for Breaker failure protection 3-phase activation and output CCRBRF (50BF) are set via the local HMI or PCM600.

The following settings can be done for the breaker failure protection.

GlobalBaseSel: Selects the global base value group used by the function to define (*IBase*), (*VBase*) and (*SBase*).

Operation: *Disabled*/*Enabled*

FunctionMode This parameter can be set *Current* or *Contact*. This states the way the detection of failure of the breaker is performed. In the mode current the current measurement is used for the detection. In the mode *Contact* the long duration of breaker position signal is used as indicator of failure of the breaker. The mode *Current&Contact* means that both ways of detections are activated. *Contact* mode can be usable in applications where the fault current through the circuit breaker is small. This can be the case for some generator protection application (for example reverse power protection) or in case of line ends with weak end infeed.

RetripMode: This setting states how the re-trip function shall operate. *Retrip Off* means that the re-trip function is not activated. *CB Pos Check* (circuit breaker position check) and *Current* means that a phase current must be larger than the operate level to allow re-trip. *CB Pos Check* (circuit breaker position check) and *Contact* means re-trip is done when circuit breaker is closed (breaker position is used). *No CBPos Check* means re-trip is done without check of breaker position.

Table 18: Dependencies between parameters RetripMode and FunctionMode

RetripMode	*FunctionMode*	Description
Retrip Off	N/A	the re-trip function is not activated
CB Pos Check	*Current*	a phase current must be larger than the operate level to allow re-trip
	Contact	re-trip is done when breaker position indicates that breaker is still closed after re-trip time has elapsed
	Current&Contact	both methods are used
No CBPos Check	*Current*	re-trip is done without check of breaker position
	Contact	re-trip is done without check of breaker position
	Current&Contact	both methods are used

BuTripMode: Back-up trip mode is given to state sufficient current criteria to detect failure to break. For *Current* operation *2 out of 4* means that at least two currents, of the three-phase currents and the residual current, shall be high to indicate breaker failure. *1 out of 3* means that at least one current of the three-phase currents shall be high to indicate breaker failure. *1 out of 4* means that at least one current of the three-phase currents or the residual current shall be high to indicate breaker failure. In most applications *1 out of 3* is

sufficient. For *Contact* operation means back-up trip is done when circuit breaker is closed (breaker position is used).

Pickup_PH: Current level for detection of breaker failure, set in % of *IBase*. This parameter should be set so that faults with small fault current can be detected. The setting can be chosen in accordance with the most sensitive protection function to start the breaker failure protection. Typical setting is 10% of *IBase*.

Pickup_BlkCont: If any contact based detection of breaker failure is used this function can be blocked if any phase current is larger than this setting level. If the *FunctionMode* is set *Current&Contact* breaker failure for high current faults are safely detected by the current measurement function. To increase security the contact based function should be disabled for high currents. The setting can be given within the range 5 – 200% of *IBase*.

Pickup_N: Residual current level for detection of breaker failure set in % of *IBase*. In high impedance grounded systems the residual current at phase- to-ground faults are normally much smaller than the short circuit currents. In order to detect breaker failure at single-phase-ground faults in these systems it is necessary to measure the residual current separately. Also in effectively grounded systems the setting of the ground-fault current protection can be chosen to relatively low current level. The *BuTripMode* is set *1 out of 4*. The current setting should be chosen in accordance to the setting of the sensitive ground-fault protection. The setting can be given within the range 2 – 200 % of *IBase*.

t1: Time delay of the re-trip. The setting can be given within the range 0 – 60s in steps of 0.001 s. Typical setting is 0 – 50ms.

t2: Time delay of the back-up trip. The choice of this setting is made as short as possible at the same time as unwanted operation must be avoided. Typical setting is 90 – 200ms (also dependent of re-trip timer).

The minimum time delay for the re-trip can be estimated as:

$$t2 \geq t1 + t_{cbopen} + t_{BFP\_reset} + t_{margin}$$

(Equation 62)

where:

t_{cbopen}	is the maximum opening time for the circuit breaker
t_{BFP_reset}	is the maximum time for breaker failure protection to detect correct breaker function (the current criteria reset)
t_{margin}	is a safety margin

It is often required that the total fault clearance time shall be less than a given critical time. This time is often dependent of the ability to maintain transient stability in case of a fault close to a power plant.

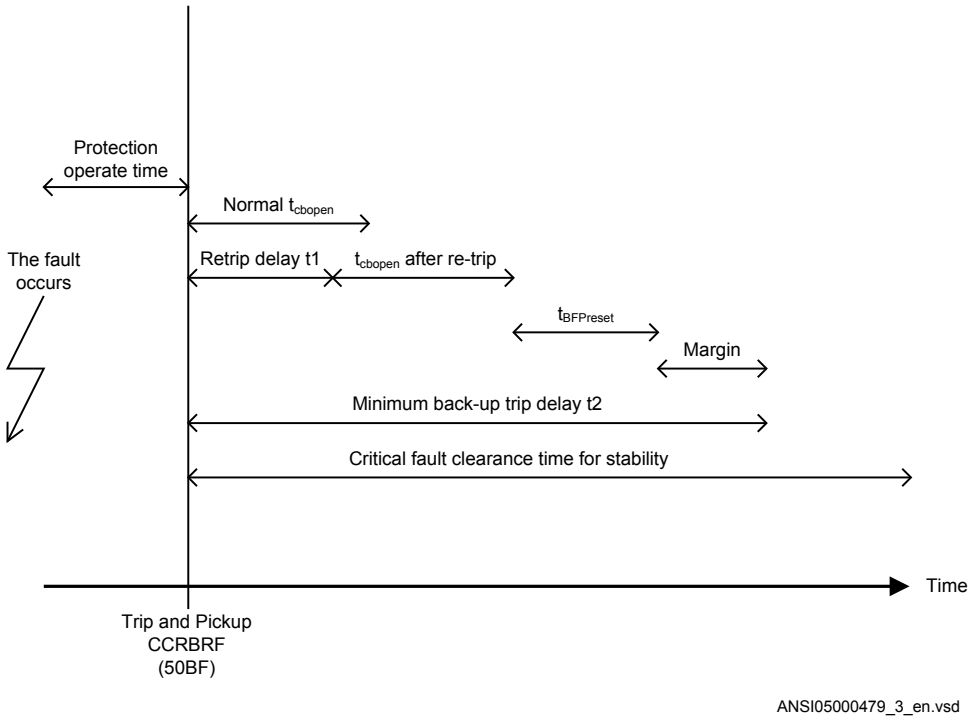

Figure 67: Time sequence

t2MPh: Time delay of the back-up trip at multi-phase initiate. The critical fault clearance time is often shorter in case of multi-phase faults, compared to single phase-to-ground faults. Therefore there is a possibility to reduce the back-up trip delay for multi-phase faults. Typical setting is 90 – 150 ms.

t3: Additional time delay to *t2* for a second back-up trip TRBU2. In some applications there might be a requirement to have separated back-up trip functions, tripping different back-up circuit breakers.

tCBAlarm: Time delay for alarm in case of indication of faulty circuit breaker. There is a binary input 52FAIL from the circuit breaker. This signal is activated when internal supervision in the circuit breaker detect that the circuit breaker is unable to clear fault. This could be the case when gas pressure is low in a SF6 circuit breaker, of others. After the set time an alarm is given, so that actions can be done to repair the circuit breaker. The time delay for back-up trip is bypassed when the 52FAIL is active. Typical setting is 2.0 seconds.

tPulse: Trip pulse duration. This setting must be larger than the critical impulse time of circuit breakers to be tripped from the breaker failure protection. Typical setting is 200 ms.

7.10 Stub protection STBPTOC (50STB)

7.10.1 Identification

Function description	IEC 61850 identification	IEC 60617 identification	ANSI/IEEE C37.2 device number
Stub protection	STBPTOC	*3I>STUB*	50STB

7.10.2 Application

In a breaker-and-a-half switchyard the line protection and the busbar protection normally have overlap when a connected object is in service. When an object is taken out of service it is normally required to keep the diagonal of the breaker-and-a-half switchyard in operation. This is done by opening the disconnector to the protected object. This will, however, disable the normal object protection (for example the distance protection) of the energized part between the circuit breakers and the open disconnector.

Stub protection STBPTOC (50STB) is a simple phase overcurrent protection, fed from the two current transformer groups feeding the object taken out of service. The stub protection is only activated when the disconnector of the object is open. STBPTOC (50STB) enables fast fault clearance of faults at the section between the CTs and the open disconnector.

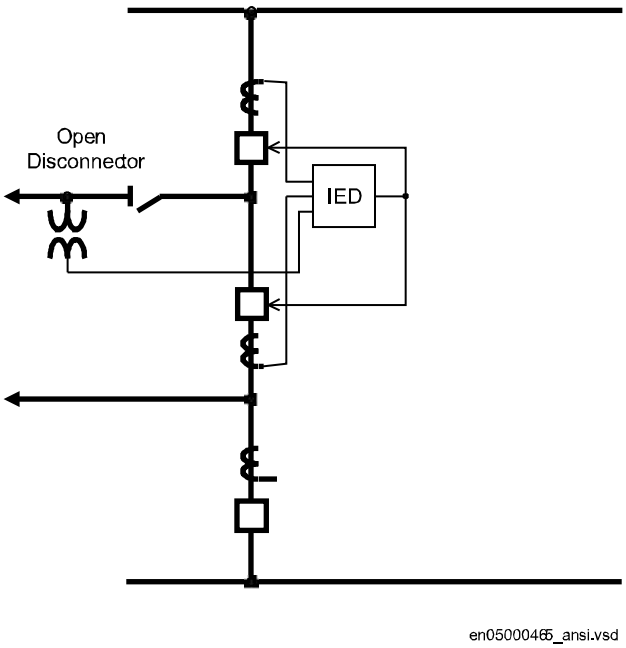

Figure 68: Typical connection for STBPTOC (50STB) in breaker-and-a-half arrangement.

7.10.3 Setting guidelines

The parameters for Stub protection STBPTOC (50STB) are set via the local HMI or PCM600.

The following settings can be done for the stub protection.

GlobalBaseSel: Selects the global base value group used by the function to define (*IBase*), (*VBase*) and (*SBase*).

Operation: *Disabled*/*Enabled*

EnableMode: This parameter can be set *Enable* or *Continuous*. With the*Enable* setting the function is only active when a binary release signal ENABLE into the function is activated. This signal is normally taken from an auxiliary contact (normally closed) of the line disconnector and connected to a binary input ENABLE of the IED. With the setting*Continuous* the function is activated independent of presence of any external release signal.

IPickup: Current level for the Stub protection, set in % of *IBase*. This parameter should be set so that all faults on the stub can be detected. The setting should thus be based on fault calculations.

t: Time delay of the operation. Normally the function shall be instantaneous.

7.11 Pole discrepancy protection CCPDSC(52PD)

7.11.1 Identification

Function description	IEC 61850 identification	IEC 60617 identification	ANSI/IEEE C37.2 device number
Pole discrepancy protection	CCPDSC	PD	52PD

7.11.2 Application

There is a risk that a circuit breaker will get discrepancy between the poles at circuit breaker operation: closing or opening. One pole can be open and the other two closed, or two poles can be open and one closed. Pole discrepancy of a circuit breaker will cause unsymmetrical currents in the power system. The consequence of this can be:

- Negative sequence currents that will give stress on rotating machines
- Zero sequence currents that might give unwanted operation of sensitive ground-fault protections in the power system.

It is therefore important to detect situations with pole discrepancy of circuit breakers. When this is detected the breaker should be tripped directly.

Pole discordance protection CCPDSC (52PD) will detect situation with deviating positions of the poles of the protected circuit breaker. The protection has two different options to make this detection:

- By connecting the auxiliary contacts in the circuit breaker so that logic is created, a signal can be sent to the protection, indicating pole discrepancy. This logic can also be realized within the protection itself, by using opened and close signals for each circuit breaker pole, connected to the protection.
- Each phase current through the circuit breaker is measured. If the difference between the phase currents is larger than a *CurrUnsymPU* this is an indication of pole discrepancy, and the protection will operate.

7.11.3 Setting guidelines

The parameters for the Pole discordance protection CCPDSC (52PD) are set via the local HMI or PCM600.

The following settings can be done for the pole discrepancy protection.

GlobalBaseSel: Selects the global base value group used by the function to define (*IBase*), (*VBase*) and (*SBase*).

Operation: *Disabled* or *Enabled*

tTrip: Time delay of the operation.

ContactSel: Operation of the contact based pole discrepancy protection. Can be set: *Disabled*/*PD signal from CB*. If *PD signal from CB* is chosen the logic to detect pole discrepancy is made in the vicinity to the breaker auxiliary contacts and only one signal is connected to the pole discrepancy function. If the *Pole pos aux cont.* alternative is chosen each open close signal is connected to the IED and the logic to detect pole discrepancy is realized within the function itself.

CurrentSel: Operation of the current based pole discrepancy protection. Can be set: *Disabled*/*CB oper monitor*/*Continuous monitor*. In the alternative *CB oper monitor* the function is activated only directly in connection to breaker open or close command (during 200 ms). In the alternative *Continuous monitor* function is continuously activated.

CurrUnsymPU: Unsymmetrical magnitude of lowest phase current compared to the highest, set in % of the highest phase current. Natural difference between phase currents in breaker-and-a-half installations must be considered. For circuit breakers in breaker-and-a-half configured switch yards there might be natural unbalance currents through the breaker. This is due to the existence of low impedance current paths in the switch yard. This phenomenon must be considered in the setting of the parameter.

CurrRelPU: Current magnitude for release of the function in % of *IBase*.

7.12 Directional underpower protection GUPPDUP (37)

7.12.1 Identification

Function description	IEC 61850 identification	IEC 60617 identification	ANSI/IEEE C37.2 device number
Directional underpower protection	GUPPDUP	P < → 2	37

7.12.2 Application

The task of a generator in a power plant is to convert mechanical energy available as a torque on a rotating shaft to electric energy.

Sometimes, the mechanical power from a prime mover may decrease so much that it does not cover bearing losses and ventilation losses. Then, the synchronous generator becomes a synchronous motor and starts to take electric power from the rest of the power system. This operating state, where individual synchronous machines operate as motors, implies no risk for the machine itself. If the generator under consideration is very large and if it consumes lots of electric power, it may be desirable to disconnect it to ease the task for the rest of the power system.

Often, the motoring condition may imply that the turbine is in a very dangerous state. The task of the reverse power protection is to protect the turbine and not to protect the generator itself.

Steam turbines easily become overheated if the steam flow becomes too low or if the steam ceases to flow through the turbine. Therefore, turbo-generators should have reverse power protection. There are several contingencies that may cause reverse power: break of a main steam pipe, damage to one or more blades in the steam turbine or inadvertent closing of the main stop valves. In the last case, it is highly desirable to have a reliable reverse power protection. It may prevent damage to an otherwise undamaged plant.

During the routine shutdown of many thermal power units, the reverse power protection gives the tripping impulse to the generator breaker (the unit breaker). By doing so, one prevents the disconnection of the unit before the mechanical power has become zero. Earlier disconnection would cause an acceleration of the turbine generator at all routine shutdowns. This should have caused overspeed and high centrifugal stresses.

When the steam ceases to flow through a turbine, the cooling of the turbine blades will disappear. Now, it is not possible to remove all heat generated by the windage losses. Instead, the heat will increase the temperature in the steam turbine and especially of the blades. When a steam turbine rotates without steam supply, the electric power consumption will be about 2% of rated power. Even if the turbine rotates in vacuum, it will

soon become overheated and damaged. The turbine overheats within minutes if the turbine loses the vacuum.

The critical time to overheating a steam turbine varies from about 0.5 to 30 minutes depending on the type of turbine. A high-pressure turbine with small and thin blades will become overheated more easily than a low-pressure turbine with long and heavy blades. The conditions vary from turbine to turbine and it is necessary to ask the turbine manufacturer in each case.

Power to the power plant auxiliaries may come from a station service transformer connected to the secondary side of the step-up transformer. Power may also come from a start-up service transformer connected to the external network. One has to design the reverse power protection so that it can detect reverse power independent of the flow of power to the power plant auxiliaries.

Hydro turbines tolerate reverse power much better than steam turbines do. Only Kaplan turbine and bulb turbines may suffer from reverse power. There is a risk that the turbine runner moves axially and touches stationary parts. They are not always strong enough to withstand the associated stresses.

Ice and snow may block the intake when the outdoor temperature falls far below zero. Branches and leaves may also block the trash gates. A complete blockage of the intake may cause cavitations. The risk for damages to hydro turbines can justify reverse power protection in unattended plants.

A hydro turbine that rotates in water with closed wicket gates will draw electric power from the rest of the power system. This power will be about 10% of the rated power. If there is only air in the hydro turbine, the power demand will fall to about 3%.

Diesel engines should have reverse power protection. The generator will take about 15% of its rated power or more from the system. A stiff engine may require perhaps 25% of the rated power to motor it. An engine that is good run in might need no more than 5%. It is necessary to obtain information from the engine manufacturer and to measure the reverse power during commissioning.

Gas turbines usually do not require reverse power protection.

Figure 69 illustrates the reverse power protection with underpower protection and with overpower protection. The underpower protection gives a higher margin and should provide better dependability. On the other hand, the risk for unwanted operation immediately after synchronization may be higher. One should set the underpower protection (reference angle set to 0) to trip if the active power from the generator is less than about 2%. One should set the overpower protection (reference angle set to 180) to trip if the power flow from the network to the generator is higher than 1%.

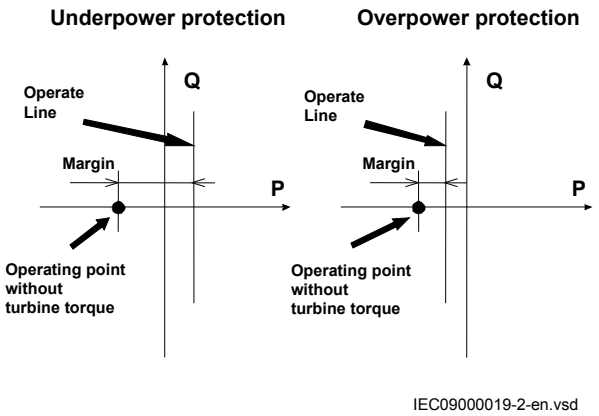

Figure 69: Reverse power protection with underpower or overpower protection

7.12.3 Setting guidelines

GlobalBaseSel: Selects the global base value group used by the function to define (*IBase*), (*VBase*) and (*SBase*).

Operation: With the parameter *Operation* the function can be set *Enabled*/*Disabled*.

Mode: The voltage and current used for the power measurement. The setting possibilities are shown in table 19.

Table 19: Complex power calculation

Set value *Mode*	Formula used for complex power calculation
A, B, C	$\bar{S} = \bar{V}_A \cdot \bar{I}_A^* + \bar{V}_B \cdot \bar{I}_B^* + \bar{V}_C \cdot \bar{I}_C^*$ (Equation 64)
Arone	$\bar{S} = \bar{V}_{AB} \cdot \bar{I}_A^* - \bar{V}_{BC} \cdot \bar{I}_C^*$ (Equation 65)
PosSeq	$\bar{S} = 3 \cdot \bar{V}_{PosSeq} \cdot \bar{I}_{PosSeq}^*$ (Equation 66)
AB	$\bar{S} = \bar{V}_{AB} \cdot (\bar{I}_A^* - \bar{I}_B^*)$ (Equation 67)
Table continues on next page	

Set value *Mode*	Formula used for complex power calculation
BC	$\bar{S} = \bar{V}_{BC} \cdot (\bar{I}_B^* - \bar{I}_C^*)$ (Equation 68)
CA	$\bar{S} = \bar{V}_{CA} \cdot (\bar{I}_C^* - \bar{I}_A^*)$ (Equation 69)
A	$\bar{S} = 3 \cdot \bar{V}_A \cdot \bar{I}_A^*$ (Equation 70)
B	$\bar{S} = 3 \cdot \bar{V}_B \cdot \bar{I}_B^*$ (Equation 71)
C	$\bar{S} = 3 \cdot \bar{V}_C \cdot \bar{I}_C^*$ (Equation 72)

The function has two stages that can be set independently.

With the parameter *OpMode1(2)* the function can be set *Enabled*/*Disabled*.

The function gives trip if the power component in the direction defined by the setting *Angle1(2)* is smaller than the set pick up power value *Power1(2)*

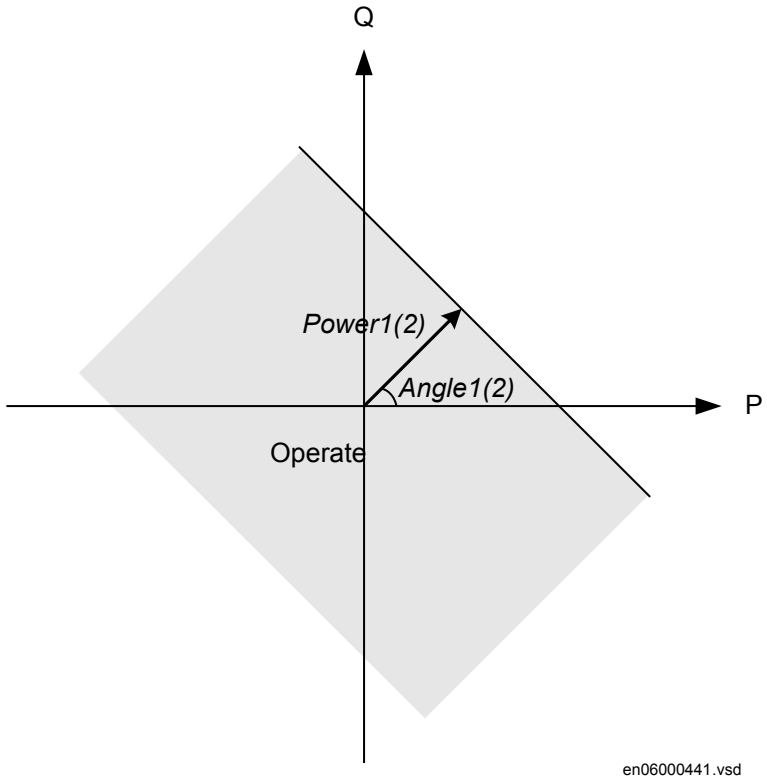

Figure 70: Underpower mode

The setting *Power1(2)* gives the power component pick up value in the *Angle1(2)* direction. The setting is given in p.u. of the generator rated power, see equation 73.

Minimum recommended setting is 0.2% of S_N when metering class CT inputs into the IED are used.

$$S_N = \sqrt{3} \cdot VBase \cdot IBase$$

(Equation 73)

The setting *Angle1(2)* gives the characteristic angle giving maximum sensitivity of the power protection function. The setting is given in degrees. For active power the set angle should be 0° or 180°. 0° should be used for generator low forward active power protection.

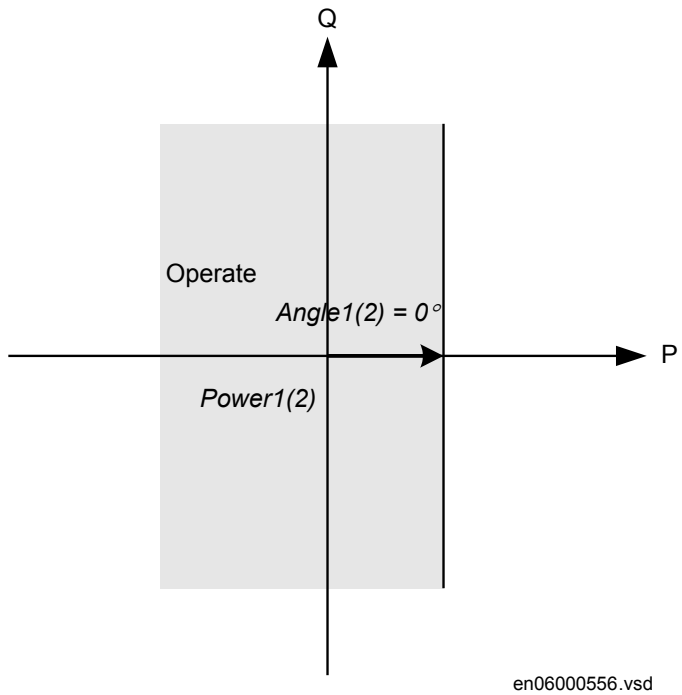

Figure 71: For low forward power the set angle should be 0° in the underpower function

TripDelay1(2) is set in seconds to give the time delay for trip of the stage after pick up.

Hysteresis1(2) is given in p.u. of generator rated power according to equation 74.

$$S_N = \sqrt{3} \cdot VBase \cdot IBase$$

(Equation 74)

The drop out power will be *Power1(2)* + *Hysteresis1(2)*.

The possibility to have low pass filtering of the measured power can be made as shown in the formula:

$$S = TD \cdot S_{Old} + (1 - TD) \cdot S_{Calculated}$$

(Equation 75)

Where

S	is a new measured value to be used for the protection function
S_{old}	is the measured value given from the function in previous execution cycle
$S_{Calculated}$	is the new calculated value in the present execution cycle
TD	is settable parameter

The value of *k=0.92* is recommended in generator applications as the trip delay is normally quite long.

The calibration factors for current and voltage measurement errors are set % of rated current/voltage:

IMagComp5, IMagComp30, IMagComp100

VMagComp5, VMagComp30, VMagComp100

IMagComp5, IMagComp30, IMagComp100

The angle compensation is given as difference between current and voltage angle errors.

The values are given for operating points 5, 30 and 100% of rated current/voltage. The values should be available from instrument transformer test protocols.

7.13 Directional overpower protection GOPPDOP (32)

7.13.1 Identification

Function description	IEC 61850 identification	IEC 60617 identification	ANSI/IEEE C37.2 device number
Directional overpower protection	GOPPDOP	P > → 2	32

7.13.2 Application

The task of a generator in a power plant is to convert mechanical energy available as a torque on a rotating shaft to electric energy.

Sometimes, the mechanical power from a prime mover may decrease so much that it does not cover bearing losses and ventilation losses. Then, the synchronous generator becomes a synchronous motor and starts to take electric power from the rest of the power system. This operating state, where individual synchronous machines operate as motors, implies no risk for the machine itself. If the generator under consideration is very large and if it consumes lots of electric power, it may be desirable to disconnect it to ease the task for the rest of the power system.

Often, the motoring condition may imply that the turbine is in a very dangerous state. The task of the reverse power protection is to protect the turbine and not to protect the generator itself.

Steam turbines easily become overheated if the steam flow becomes too low or if the steam ceases to flow through the turbine. Therefore, turbo-generators should have reverse power protection. There are several contingencies that may cause reverse power: break of a main steam pipe, damage to one or more blades in the steam turbine or inadvertent closing of the main stop valves. In the last case, it is highly desirable to have a reliable reverse power protection. It may prevent damage to an otherwise undamaged plant.

During the routine shutdown of many thermal power units, the reverse power protection gives the tripping impulse to the generator breaker (the unit breaker). By doing so, one prevents the disconnection of the unit before the mechanical power has become zero. Earlier disconnection would cause an acceleration of the turbine generator at all routine shutdowns. This should have caused overspeed and high centrifugal stresses.

When the steam ceases to flow through a turbine, the cooling of the turbine blades will disappear. Now, it is not possible to remove all heat generated by the windage losses. Instead, the heat will increase the temperature in the steam turbine and especially of the blades. When a steam turbine rotates without steam supply, the electric power consumption will be about 2% of rated power. Even if the turbine rotates in vacuum, it will soon become overheated and damaged. The turbine overheats within minutes if the turbine loses the vacuum.

The critical time to overheating of a steam turbine varies from about 0.5 to 30 minutes depending on the type of turbine. A high-pressure turbine with small and thin blades will become overheated more easily than a low-pressure turbine with long and heavy blades. The conditions vary from turbine to turbine and it is necessary to ask the turbine manufacturer in each case.

Power to the power plant auxiliaries may come from a station service transformer connected to the primary side of the step-up transformer. Power may also come from a start-up service transformer connected to the external network. One has to design the reverse power protection so that it can detect reverse power independent of the flow of power to the power plant auxiliaries.

Hydro turbines tolerate reverse power much better than steam turbines do. Only Kaplan turbine and bulb turbines may suffer from reverse power. There is a risk that the turbine runner moves axially and touches stationary parts. They are not always strong enough to withstand the associated stresses.

Ice and snow may block the intake when the outdoor temperature falls far below zero. Branches and leaves may also block the trash gates. A complete blockage of the intake may cause cavitations. The risk for damages to hydro turbines can justify reverse power protection in unattended plants.

A hydro turbine that rotates in water with closed wicket gates will draw electric power from the rest of the power system. This power will be about 10% of the rated power. If there is only air in the hydro turbine, the power demand will fall to about 3%.

Diesel engines should have reverse power protection. The generator will take about 15% of its rated power or more from the system. A stiff engine may require perhaps 25% of the rated power to motor it. An engine that is well run in might need no more than 5%. It is necessary to obtain information from the engine manufacturer and to measure the reverse power during commissioning.

Gas turbines usually do not require reverse power protection.

Figure 72 illustrates the reverse power protection with underpower IED and with overpower IED. The underpower IED gives a higher margin and should provide better dependability. On the other hand, the risk for unwanted operation immediately after synchronization may be higher. One should set the underpower IED to trip if the active power from the generator is less than about 2%. One should set the overpower IED to trip if the power flow from the network to the generator is higher than 1%.

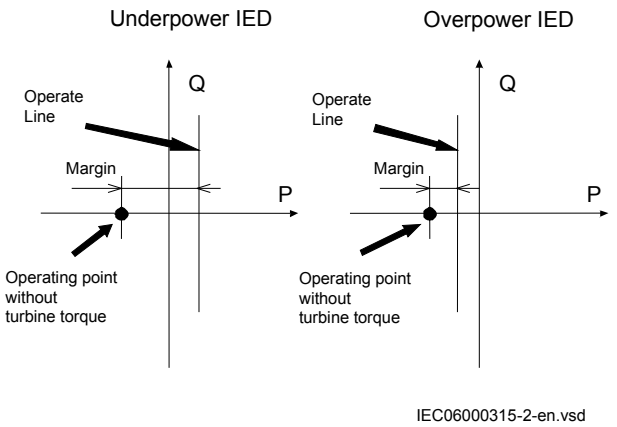

Figure 72: Reverse power protection with underpower IED and overpower IED

7.13.3 Setting guidelines

GlobalBaseSel: Selects the global base value group used by the function to define (*IBase*), (*VBase*) and (*SBase*).

Operation: With the parameter *Operation* the function can be set *Enabled*/*Disabled*.

Mode: The voltage and current used for the power measurement. The setting possibilities are shown in table 20.

Table 20: Complex power calculation

Set value *Mode*	Formula used for complex power calculation
A,B,C	$\bar{S} = \bar{V}_A \cdot \bar{I}_A^* + \bar{V}_B \cdot \bar{I}_B^* + \bar{V}_C \cdot \bar{I}_C^*$ (Equation 77)
Arone	$\bar{S} = \bar{V}_{AB} \cdot \bar{I}_A^* - \bar{V}_{BC} \cdot \bar{I}_C^*$ (Equation 78)
PosSeq	$\bar{S} = 3 \cdot \bar{V}_{PosSeq} \cdot \bar{I}_{PosSeq}^*$ (Equation 79)
A,B	$\bar{S} = \bar{V}_{AB} \cdot (\bar{I}_A^* - \bar{I}_B^*)$ (Equation 80)
B,C	$\bar{S} = \bar{V}_{BC} \cdot (\bar{I}_B^* - \bar{I}_C^*)$ (Equation 81)
C,A	$\bar{S} = \bar{V}_{CA} \cdot (\bar{I}_C^* - \bar{I}_A^*)$ (Equation 82)
A	$\bar{S} = 3 \cdot \bar{V}_A \cdot \bar{I}_A^*$ (Equation 83)
B	$\bar{S} = 3 \cdot \bar{V}_B \cdot \bar{I}_B^*$ (Equation 84)
C	$\bar{S} = 3 \cdot \bar{V}_C \cdot \bar{I}_C^*$ (Equation 85)

The function has two stages that can be set independently.

With the parameter *OpMode1(2)* the function can be set *Enabled*/*Disabled*.

The function gives trip if the power component in the direction defined by the setting *Angle1(2)* is larger than the set pick up power value *Power1(2)*

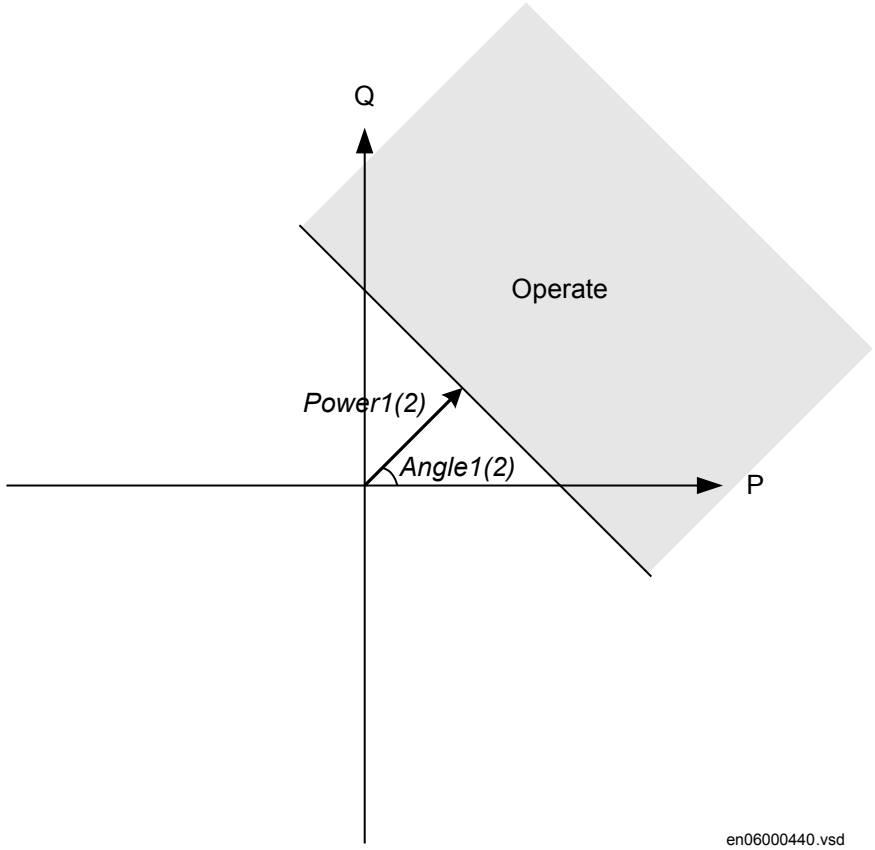

Figure 73: Overpower mode

The setting *Power1(2)* gives the power component pick up value in the *Angle1(2)* direction. The setting is given in p.u. of the generator rated power, see equation 86.

Minimum recommended setting is 0.2% of S_N when metering class CT inputs into the IED are used.

$$S_N = \sqrt{3} \cdot VBase \cdot IBase$$

(Equation 86)

The setting *Angle1(2)* gives the characteristic angle giving maximum sensitivity of the power protection function. The setting is given in degrees. For active power the set angle should be 0° or 180°. 180° should be used for generator reverse power protection.

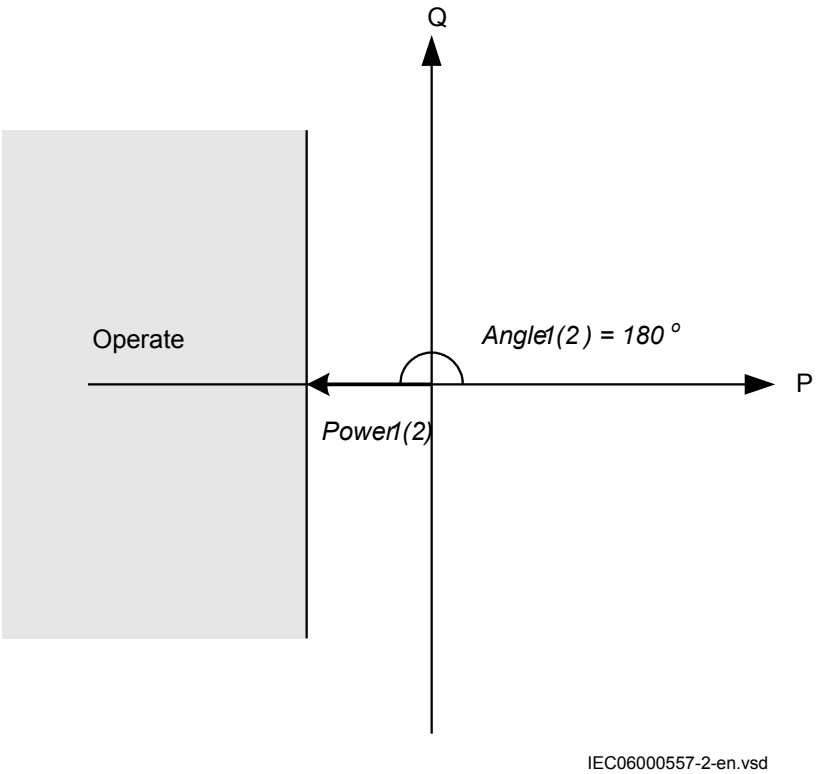

Figure 74: For reverse power the set angle should be 180° in the overpower function

TripDelay1(2) is set in seconds to give the time delay for trip of the stage after pick up.

Hysteresis1(2) is given in p.u. of generator rated power according to equation 87.

$$S_N = \sqrt{3} \cdot VBase \cdot IBase$$

(Equation 87)

The drop out power will be *Power1(2) - Hysteresis1(2)*.

The possibility to have low pass filtering of the measured power can be made as shown in the formula:

$$S = TD \cdot S_{Old} + (1 - TD) \cdot S_{Calculated}$$

(Equation 88)

Where	
S	is a new measured value to be used for the protection function
S_{old}	is the measured value given from the function in previous execution cycle
$S_{Calculated}$	is the new calculated value in the present execution cycle
TD	is settable parameter

The value of *TD=0.92* is recommended in generator applications as the trip delay is normally quite long.

The calibration factors for current and voltage measurement errors are set % of rated current/voltage:

IMagComp5, IMagComp30, IMagComp100

VMagComp5, VMagComp30, VMagComp100

IAngComp5, IAngComp30, IAngComp100

The angle compensation is given as difference between current and voltage angle errors.

The values are given for operating points 5, 30 and 100% of rated current/voltage. The values should be available from instrument transformer test protocols.

7.14 Broken conductor check BRCPTOC (46)

7.14.1 Identification

Function description	IEC 61850 identification	IEC 60617 identification	ANSI/IEEE C37.2 device number
Broken conductor check	BRCPTOC	-	46

7.14.2 Application

Conventional protection functions can not detect the broken conductor condition. Broken conductor check (BRCPTOC, 46) function, consisting of continuous current

unsymmetrical check on the line where the IED connected will give alarm or trip at detecting broken conductors.

7.14.3 Setting guidelines

Broken conductor check BRCPTOC (46) must be set to detect open phase/s (series faults) with different loads on the line. BRCPTOC (46) must at the same time be set to not operate for maximum asymmetry which can exist due to, for example, not transposed power lines.

All settings are in primary values or percentage.

Set *IBase* (given in *GlobalBaseSel*) to power line rated current or CT rated current.

Set minimum operating level per phase *Pickup_PH* to typically 10-20% of rated current.

Set the unsymmetrical current, which is relation between the difference of the minimum and maximum phase currents to the maximum phase current to typical *Pickup_ub = 50%*.

Note that it must be set to avoid problem with asymmetry under minimum operating conditions.

Set the time delay *tOper = 5 - 60* seconds and reset time *tReset = 0.010 - 60.000* seconds.

7.15 Capacitor bank protection CBPGAPC

7.15.1 Identification

Function description	IEC 61850 identification	IEC 60617 identification	ANSI/IEEE C37.2 device number
Capacitor bank protection	CBPGAPC	-	-

7.15.2 Application

Shunt capacitor banks (SCBs) are somewhat specific and different from other power system elements. These specific features of SCB are briefly summarized in this section.

A capacitor unit is the building block used for SCB construction. The capacitor unit is made up of individual capacitor elements, arranged in parallel or series connections. Capacitor elements normally consist of aluminum foil, paper, or film-insulated cells immersed in a biodegradable insulating fluid and are sealed in a metallic container. The

internal discharge resistor is also integrated within the capacitor unit in order to reduce trapped residual voltage after disconnection of the SCB from the power system. Units are available in a variety of voltage ratings (240V to 25kV) and sizes (2.5kVAr to about 1000kVAr). Capacitor unit can be designed with one or two bushings.

The high-voltage SCB is normally constructed using individual capacitor units connected in series and/or parallel to obtain the required voltage and MVAr rating. Typically the neighboring capacitor units are mounted in racks. Each rack must be insulated from the other by insulators because the can casing within each rack are at a certain potential. Refer figure 75 for an example:

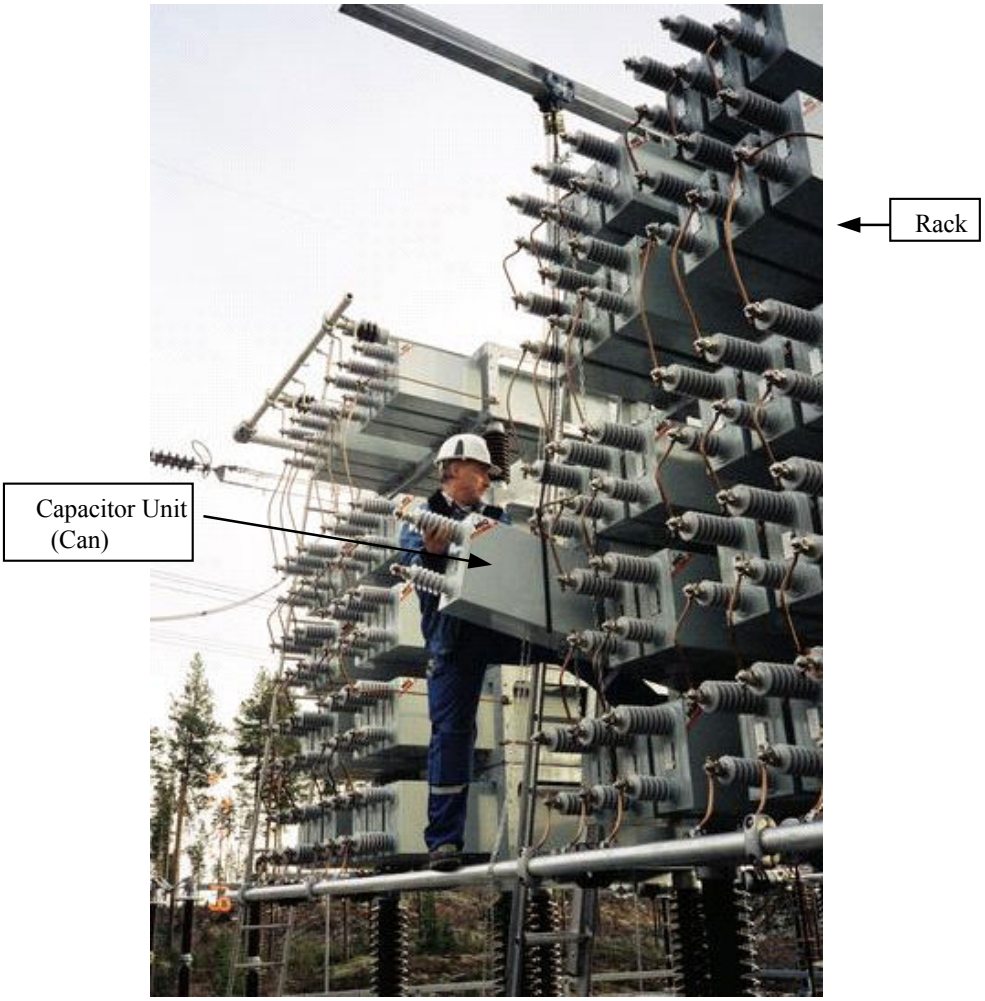

IEC09000753_1_en.vsd

Figure 75: Replacement of a faulty capacitor unit within SCB

There are four types of the capacitor unit fusing designs which are used for construction of SCBs:

Externally fused	where an individual fuse, externally mounted, protects each capacitor unit.
Internally fused	where each capacitor element is fused inside the capacitor unit
Fuseless	where SCB is built from series connections of the individual capacitor units (that is, strings) and without any fuses
Unfused	where, in contrary to the fuseless configuration, a series or parallel connection of the capacitor units is used to form SCB, still without any fuses

Which type of fusing is used may depend on can manufacturer or utility preference and previous experience.

Because the SCBs are built from the individual capacitor units the overall connections may vary. Typically used SCB configurations are:

1. Delta-connected banks (generally used only at distribution voltages)
2. Single wye-connected banks
3. Double wye-connected banks
4. H-configuration, where each phase is connected in a bridge

Additionally, the SCB star point, when available, can be either grounded , grounded via impedance or isolated from ground. Which type of SCB grounding is used depends on voltage level, used circuit breaker, utility preference and previous experience. Many utilities have standard system grounding principle to ground neutrals of SCB above 100 kV.

Switching of SCB will produce transients in power system. The transient inrush current during SCB energizing typically has high frequency components and can reach peak current values, which are multiples of SCB rating. Opening of capacitor bank circuit breaker may produce step recovery voltages across open CB contact, which can consequently cause restrikes upon the first interruption of capacitive current. In modern power system the synchronized CB closing/opening may be utilized in such a manner that transients caused by SCB switching are avoided.

7.15.2.1 SCB protection

IED protection of shunt capacitor banks requires an understanding of the capabilities and limitations of the individual capacitor units and associated electrical equipment. Different types of shunt capacitor bank fusing, configuration or grounding may affect the IED selection for the protection scheme. Availability and placement of CTs and VTs can be additional limiting factor during protection scheme design.

SCB protection schemes are provided in order to detect and clear faults within the capacitor bank itself or in the connected leads to the substation busbar. Bank protection may include items such as a means to disconnect a faulted capacitor unit or capacitor

element(s), a means to initiate a shutdown of the bank in case of faults that may lead to a catastrophic failure and alarms to indicate unbalance within the bank.

Capacitor bank outages and failures are often caused by accidental contact by animals. Vermin, monkeys, birds, may use the SCB as a resting place or a landing site. When the animal touches the HV live parts this can result in a flash-over, can rapture or a cascading failures that might cause extensive damages, fire or even total destruction of the whole SCB, unless the bank is sufficiently fitted with protection IEDs.

In addition, to fault conditions SCB can be exposed to different types of abnormal operating conditions. In accordance with IEC and ANSI standards capacitors shall be capable of continuous operation under contingency system and bank conditions, provided the following limitations are not exceeded:

1. Capacitor units should be capable of continuous operation including harmonics, but excluding transients, to 110% of rated IED root-mean-square (RMS) voltage and a crest voltage not exceeding of rated RMS voltage. The capacitor should also be able to carry 135% of nominal current. The voltage capability of any series element of a capacitor unit shall be considered to be its share of the total capacitor unit voltage capability.
2. Capacitor units should not give less than 100% nor more than 110% of rated reactive power at rated sinusoidal voltage and frequency, measured at a uniform case and internal temperature of 25°C.
3. Capacitor units mounted in multiple rows and tiers should be designed for continuous operation for a 24h average temperature of 40 °C during the hottest day, or −40 °C during the coldest day expected at the location.
4. Capacitor units should be suitable for continuous operation at up to 135% of rated reactive power caused by the combined effects of:
   - Voltage in excess of the nameplate rating at fundamental frequency, but not over 110% of rated RMS voltage
   - Harmonic voltages superimposed on the fundamental frequency
   - Reactive power manufacturing tolerance of up to 115% of rated reactive power
5. Capacitor units rated above 600 V shall have an internal discharge device to reduce the residual voltage to 50 V or less in 5 or 10 minutes (depending on national standard).

Note that capacitor units designed for special applications can exceed these ratings.

Thus, as a general rule, the minimum number of capacitor units connected in parallel within a SCB is such that isolation of one capacitor unit in a group should not cause a voltage unbalance sufficient to place more than 110% of rated voltage on the remaining capacitors of that parallel group. Equally, the minimum number of series connected groups within a SCB is such that complete bypass of one group should not pause voltage higher than 110% of the rated voltage on the remaining capacitors of that serial group. The

value of 110% is the maximum continuous overvoltage capability of capacitor units as per IEEE Std 18-1992.

The SCB typically requires the following types of IED protection:

1. Short circuit protection for SCB and connecting leads (can be provided by using PHPIOC, OC4PTOC, CVGAPC, T2WPDIF/T3WPDIF or HZPDIF functions)
2. Ground-fault protection for SCB and connecting leads (can be provided by using EFPIOC, EF4PTOC, CVGAPC, T2WPDIF/T3WPDIF or HZPDIF functions)
3. Current or Voltage based unbalance protection for SCB (can be provided by using EF4PTOC, OC4PTOC, CVGAPC or VDCPTOV functions)
4. Overload protection for SCB
5. Undercurrent protection for SCB
6. Reconnection inhibit protection for SCB
7. Restrike condition detection

CBPGAPC function can be used to provide the last four types of protection mentioned in the above list.

7.15.3 Setting guidelines

This setting example will be done for application as shown in figure 76:

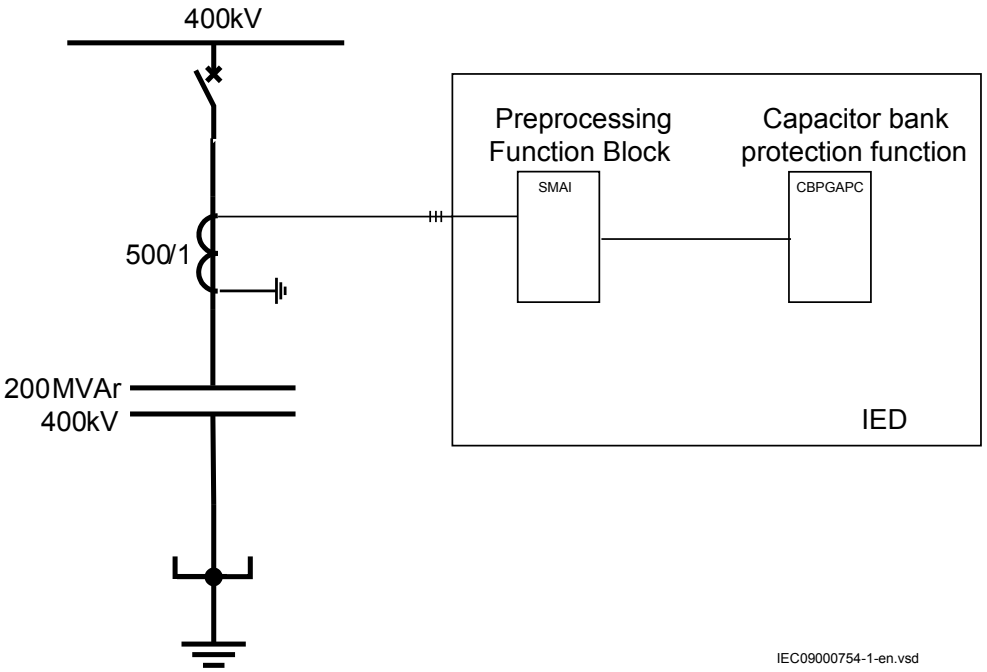

Figure 76: Single line diagram for the application example

From figure 76 it is possible to calculate the following rated fundamental frequency current for this SCB:

$$I_r = \frac{1000 \cdot 200[MVAr]}{\sqrt{3} \cdot 400[kV]} = 289A$$

(Equation 89)

or on the secondary CT side:

$$I_{r\_Sec} = \frac{289A}{500/1} = 0.578A$$

(Equation 90)

Note that the SCB rated current on the secondary CT side is important for secondary injection of the function.

The parameters for the Capacitor bank protection function CBPGAPC are set via the local HMI or PCM600. The following settings are done for this function:

General Settings:

Operation =Enabled; to enable the function

IBase =289A; Fundamental frequency SCB rated current in primary amperes. This value is used as a base value for pickup settings of all other features integrated in this function.

Reconnection inhibit feature:

OperationRecIn =Enabled; to enable this feature

IRecInhibit =10% (of *IBase*); Current level under which function will detect that SCB is disconnected from the power system

tReconnInhibit =300s; Time period under which SCB shall discharge remaining residual voltage to less than 5%.

Overcurrent feature:

OperationOC =Enabled; to enable this feature

PU 51 =135% (of *IBase*); Current level for overcurrent pickup. Selected value gives pickup recommended by international standards.

tOC =30s; Time delay for overcurrent trip

Undercurrent feature:

Operation37 =Enabled; to enable this feature

PU_37 =70% (of *IBase*); Current level for undercurrent pickup

tUC =5s; Time delay for undercurrent trip

Undercurrent feature is blocked by operation of Reconnection inhibit feature.

Reactive power overload feature:

Operation QOL =Enabled; to enable this feature

UP_QOL =130% (of SCB MVAr rating); Reactive power level required for pickup. Selected value gives pickup recommended by international standards.

tQOL =60s; Time delay for reactive power overload trip

Harmonic voltage overload feature:

OperationHOL =Enabled; to enable this feature

Settings for definite time delay step

HOL_DT_V =200% (of SCB voltage rating); Voltage level required for pickup

tHOL_DT =10s; Definite time delay for harmonic overload trip

Settings for IDMT delay step

PU_HOL_DT_V =110% (of SCB voltage rating); Voltage level required for pickup of IDMT stage. Selected value gives pickup recommended by international standards.

k_HOL_IDMT =1.0; Time multiplier for IDMT stage. Selected value gives operate time in accordance with international standards

tMax_HOL_IDMT =2000s; Maximum time delay for IDMT stage for very low level of harmonic overload

tMin_HOL_IDMT =0.1s; Minimum time delay for IDMT stage. Selected value gives operate time in accordance with international standards

7.15.3.1 Restrike detection

Opening of SCBs can be quite problematic for certain types of circuit breakers (CBs). Typically such problems are manifested as CB restrikes.

In simple words this means that the CB is not breaking the current at the first zero crossing after separation of the CB contacts. Instead current is re-ignited and only braked at consecutive current zero crossings. This condition is manifested as high current pulses at the moment of current re-ignition.

To detect this CB condition, the built in overcurrent feature can be used. Simply, any start of the overcurrent feature during breaker normal opening means a restrike. Therefore simple logic can be created in the Application Configuration tool to detect such CB behavior. Such CB condition can be just alarmed, and if required, the built in disturbance recorder can also be triggered.

To create this logic, a binary signal that the CB is going to be opened (but not trip command) shall be made available to the IED.

7.16 Voltage-restrained time overcurrent protection VRPVOC (51V)

7.16.1 Identification

Function description	IEC 61850 identification	IEC 60617 identification	ANSI/IEEE C37.2 device number
Voltage-restrained time overcurrent protection	VRPVOC	I>/U<	51V

7.16.2 Application

A breakdown of the insulation between phase conductors or a phase conductor and ground results in a short-circuit or a ground fault. Such faults can result in large fault currents and may cause severe damage to the power system primary equipment.

A typical application of the voltage-restrained time overcurrent protection is in the generator protection system, where it is used as backup protection. If a phase-to-phase fault affects a generator, the fault current amplitude is a function of time, and it depends on generator characteristic (reactances and time constants), its load conditions (immediately before the fault) and excitation system performance and characteristic. So the fault current amplitude may decay with time. A voltage-restrained overcurrent relay can be set in order to remain in the picked-up state in spite of the current decay, and perform a backup trip in case of failure of the main protection.

The IED can be provided with a voltage-restrained time overcurrent protection (VRPVOC, 51V). The VRPVOC (51V) function is always connected to three-phase

current and three-phase voltage input in the configuration tool, but it will always measure the maximum phase current and the minimum phase-to-phase voltage.

VRPVOC (51V) function module has two independent protection each consisting of:

- One overcurrent step with the following built-in features:
  - Selectable definite time delay or Inverse Time IDMT characteristic
  - Voltage restrained/controlled feature is available in order to modify the pick-up level of the overcurrent stage in proportion to the magnitude of the measured voltage
- One undervoltage step with the following built-in feature:
  - Definite time delay

The undervoltage function can be enabled or disabled. Sometimes in order to obtain desired application functionality it is necessary to provide interaction between the two protection elements within the VRPVOC (51V) function by appropriate IED configuration (for example, overcurrent protection with under-voltage seal-in).

7.16.2.1 Base quantities

GlobalBaseSel defines the particular Global Base Values Group where the base quantities of the function are set. In that Global Base Values Group:

IBase shall be entered as rated phase current of the protected object in primary amperes.

VBase shall be entered as rated phase-to-phase voltage of the protected object in primary kV.

7.16.2.2 Application possibilities

VRPVOC (51V) function can be used in one of the following three applications:

- voltage controlled over-current
- voltage restrained over-current
- overcurrent protection with under-voltage seal-in.

7.16.2.3 Undervoltage seal-in

In the case of a generator with a static excitation system, which receives its power from the generator terminals, the magnitude of a sustained phase short-circuit current depends on the generator terminal voltage. In case of a nearby multi-phase fault, the generator terminal voltage may drop to quite low level, for example, less than 25%, and the generator fault current may consequently fall below the pickup level of the overcurrent

protection. The short-circuit current may drop below the generator rated current after 0.5...1 s. Also, for generators with an excitation system not fed from the generator terminals, a fault can occur when the automatic voltage regulator is out of service. In such cases, to ensure tripping under such conditions, overcurrent protection with undervoltage seal-in can be used.

To apply the VRPVOC(51V) function, the configuration is done according to figure 77. As seen in the figure, the pickup of the overcurrent stage will enable the undervoltage stage. Once enabled, the undervoltage stage will start a timer, which causes function tripping, if the voltage does not recover above the set value. To ensure a proper reset, the function is blocked two seconds after the trip signal is issued.

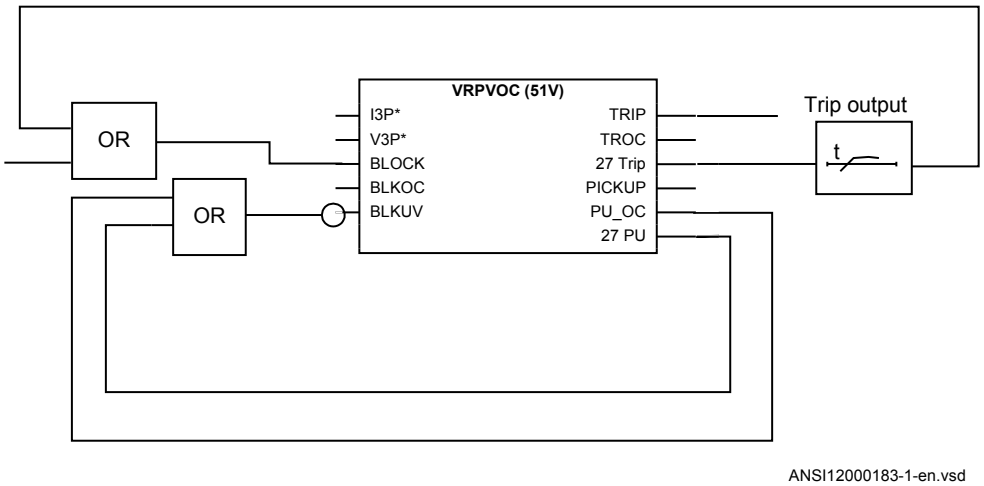

Figure 77: Undervoltage seal-in of current pickup

7.16.3 Setting guidelines

7.16.3.1 Explanation of the setting parameters

Operation: Set to *On* in order to activate the function; set to *Off* to switch off the complete function.

Pickup_Curr: Operation phase current level given in % of *IBase*.

Characterist: Selection of time characteristic: Definite time delay and different types of inverse time characteristics are available; see Technical Manual for details.

tDef_OC: Definite time delay. It is used if definite time characteristic is chosen; it shall be set to *0 s* if the inverse time characteristic is chosen and no additional delay shall be added.

k: Time multiplier for inverse time delay.

tMin: Minimum operation time for all inverse time characteristics. At high currents the inverse time characteristic might give a very short operation time. By setting this parameter the operation time of the step can never be shorter than the setting.

Operation_UV: it sets *On*/*Off* the operation of the under-voltage stage.

PickUp_Volt: Operation phase-to-phase voltage level given in % of *VBase* for the under-voltage stage. Typical setting may be, for example, in the range from 70% to 80% of the rated voltage of the generator.

tDef_UV: Definite time delay. Since it is related to a backup protection function, a long time delay (for example *0.5* s or more) is typically used.

EnBlkLowV: This parameter enables the internal block of the undervoltage stage for low voltage condition; the voltage level is defined by the parameter *BlkLowVolt*.

BlkLowVolt: Voltage level under which the internal blocking of the undervoltage stage is activated; it is set in % of *VBase*. This setting must be lower than the setting *StartVolt*. The setting can be very low, for example, lower than 10%.

VDepMode: Selection of the characteristic of the start level of the overcurrent stage as a function of the phase-to-phase voltage; two options are available: Slope and Step. See Technical Manual for details about the characteristics.

VDepFact: *Slope mode*: it is the pickup level of the overcurrent stage given in % of *Pickup_Curr* when the voltage is lower than 25% of *VBase*; so it defines the first point of the characteristic (*VDepFact***Pickup_Curr*/100**IBase* ; 0.25**VBase*).

Step mode: it is the pickup level of the overcurrent stage given in % of *Pickup_Curr* when the voltage is lower than *VHighLimit*/100**VBase*.

VHighLimit: when the measured phase-to-phase voltage is higher than *VHighLimit*/100**VBase*, than the pickup level of the overcurrent stage is *Pickup_Curr*/100**IBase*. In particular, in *Slope* mode it define the second point of the characteristic (*Pickup_Curr*/100**IBase* ; *VHighLimit*/100**VBase*).

7.16.3.2 Voltage restrained overcurrent protection for generator and step-up transformer

An example of how to use VRPVOC (51V) function to provide voltage restrained overcurrent protection for a generator is given below. Let us assume that the time coordination study gives the following required settings:

- Inverse Time Over Current IDMT curve: IEC very inverse, with multiplier k=1
- Pickup current of 185% of generator rated current at rated generator voltage
- Pickup current 25% of the original pickup current value for generator voltages below 25% of rated voltage

To ensure proper operation of the function:

1. Set *Operation* to *Enabled*
2. Set *GlobalBaseSel* to the right value in order to select the Global Base Values Group with *VBase* and *IBase* equal to the rated phase-to-phase voltage and the rated phase current of the generator.
3. Connect three-phase generator currents and voltages to VRPVOC (51V) in the application configuration.
4. Select *Characterist* to match type of overcurrent curves used in the network *IEC Very inv*.
5. Set the multiplier *k = 1* (default value).
6. Set *tDef_OC = 0.00* s, in order to add no additional delay to the trip time defined by the inverse time characteristic.
7. If required, set the minimum operating time for this curve by using the parameter *t_MinTripDelay* (default value 0.05 s).
8. Set *PickupCurr* to the value 185%.
9. Set *VDepMode* to *Slope* (default value).
10. Set *VDepFact* to the value 25% (default value).
11. Set *VHighLimit* to the value 100% (default value).

All other settings can be left at the default values.

7.16.3.3 Overcurrent protection with undervoltage seal-in

To obtain this functionality, the IED application configuration shall include a logic in accordance to figure 77 and, of course, the relevant three-phase generator currents and voltages shall be connected to VRPVOC. Let us assume that, taking into account the characteristic of the generator, the excitation system and the short circuit study, the following settings are required:

- Pickup current of the overcurrent stage: 150% of generator rated current at rated generator voltage;
- Pickup voltage of the undervoltage stage: 70% of generator rated voltage;
- Trip time: 3.0 s.

The overcurrent stage and the undervoltage stage shall be set in the following way:

1. Set *Operation* to *Enabled*.
2. Set *GlobalBaseSel* to the right value in order to select the Global Base Values Group with *VBase* and *IBase* equal to the rated phase-to-phase voltage and the rated phase current of the generator.
3. Set *StartCurr* to the value *150*%.
4. Set *Characteristic* to *IEC Def. Time*.
5. Set *tDef_OC* to *6000.00* s, if no trip of the overcurrent stage is required.
6. Set *VDepFact* to the value *100*% in order to ensure that the pickup value of the overcurrent stage is constant, irrespective of the magnitude of the generator voltage.
7. Set *Operation_UV* to *Enabled* to activate the undervoltage stage.
8. Set *StartVolt* to the values *70*%.
9. Set *tDef_UV* to *3.0* s.
10. Set *EnBlkLowV* to *Disabled* (default value) to disable the cut-off level for low-voltage of the undervoltage stage.

The other parameters may be left at their default value.

Section 8 Voltage protection

8.1 Two step undervoltage protection UV2PTUV (27)

8.1.1 Identification

Function description	IEC 61850 identification	IEC 60617 identification	ANSI/IEEE C37.2 device number
Two step undervoltage protection	UV2PTUV	*3U<*	27

8.1.2 Application

Two-step undervoltage protection function (UV2PTUV ,27) is applicable in all situations, where reliable detection of low phase voltages is necessary. It is used also as a supervision and fault detection function for other protection functions, to increase the security of a complete protection system.

UV2PTUV (27) is applied to power system elements, such as generators, transformers, motors and power lines in order to detect low voltage conditions. Low voltage conditions are caused by abnormal operation or fault in the power system. UV2PTUV (27) is used in combination with overcurrent protections, either as restraint or in logic "and gates" of the trip signals issued by the two functions. Other applications are the detection of "no voltage" condition, for example, before the energization of a HV line or for automatic breaker trip in case of a blackout. UV2PTUV (27) is also used to initiate voltage correction measures, like insertion of shunt capacitor banks to compensate for reactive load and thereby increasing the voltage. The function has a high measuring accuracy and setting hysteresis to allow applications to control reactive load.

UV2PTUV (27) is used to disconnect apparatuses, like electric motors, which will be damaged when subject to service under low voltage conditions. UV2PTUV (27) deals with low voltage conditions at power system frequency, which can be caused by the following reasons:

1. Malfunctioning of a voltage regulator or wrong settings under manual control (symmetrical voltage decrease).
2. Overload (symmetrical voltage decrease).
3. Short circuits, often as phase-to-ground faults (unsymmetrical voltage decrease).

UV2PTUV (27) prevents sensitive equipment from running under conditions that could cause their overheating and thus shorten their life time expectancy. In many cases, it is a useful function in circuits for local or remote automation processes in the power system.

8.1.3 Setting guidelines

All the voltage conditions in the system where UV2PTUV (27) performs its functions should be considered. The same also applies to the associated equipment, its voltage and time characteristic.

There is a very wide application area where general undervoltage functions are used. All voltage related settings are made as a percentage of the settings base voltage *VBase* and base current *IBase*, which normally is set to the primary rated voltage level (phase-to-phase) of the power system or the high voltage equipment under consideration.

The setting for UV2PTUV (27) is normally not critical, since there must be enough time available for the main protection to clear short circuits andground faults.

Some applications and related setting guidelines for the voltage level are described in the following sections.

8.1.3.1 Equipment protection, such as for motors and generators

The setting must be below the lowest occurring "normal" voltage and above the lowest acceptable voltage for the equipment.

8.1.3.2 Disconnected equipment detection

The setting must be below the lowest occurring "normal" voltage and above the highest occurring voltage, caused by inductive or capacitive coupling, when the equipment is disconnected.

8.1.3.3 Power supply quality

The setting must be below the lowest occurring "normal" voltage and above the lowest acceptable voltage, due to regulation, good practice or other agreements.

8.1.3.4 Voltage instability mitigation

This setting is very much dependent on the power system characteristics, and thorough studies have to be made to find the suitable levels.

8.1.3.5 Backup protection for power system faults

The setting must be below the lowest occurring "normal" voltage and above the highest occurring voltage during the fault conditions under consideration.

8.1.3.6 Settings for Two step undervoltage protection

The following settings can be done for Two step undervoltage protection UV2PTUV (27):

ConnType: Sets whether the measurement shall be phase-to-ground fundamental value, phase-to-phase fundamental value, phase-to-ground RMS value or phase-to-phase RMS value.

Operation: *Disabled* or *Enabled*.

VBase (given in *GlobalBaseSel*): Base voltage phase-to-phase in primary kV. This voltage is used as reference for voltage setting. UV2PTUV (27) measures selectively phase-to-ground voltages, or phase-to-phase voltage chosen by the setting *ConnType*. The function will operate if the voltage gets lower than the set percentage of *VBase*. When *ConnType* is set to *PhN DFT* or *PhN RMS* then the IED automatically divides set value for *VBase* by √3. *VBase* is used when *ConnType* is set to *PhPh DFT* or *PhPh RMS*. Therefore, always set *VBase* as rated primary phase-to-phase voltage of the protected object. This means operation for phase-to-ground voltage under:

$$V < (\%) \cdot VBase(kV) \Big/ \sqrt{3}$$

(Equation 91)

and operation for phase-to-phase voltage under:

$$\text{Vpickup} < (\%) \cdot \text{VBase(kV)}$$

(Equation 92)

The below described setting parameters are identical for the two steps (n = 1 or 2). Therefore, the setting parameters are described only once.

Characteristicn: This parameter gives the type of time delay to be used. The setting can be *Definite time*, *Inverse Curve A*, *Inverse Curve B*, *Prog. inv. curve*. The selection is dependent on the protection application.

OpModen: This parameter describes how many of the three measured voltages that should be below the set level to give operation for step n. The setting can be *1 out of 3*, *2 out of 3* or *3 out of 3*. In most applications, it is sufficient that one phase voltage is low to give operation. If UV2PTUV (27) shall be insensitive for single phase-to-ground faults, *2 out of 3* can be chosen. In subtransmission and transmission networks the undervoltage function is mainly a system supervision function and 3 out of 3 is selected.

Pickupn: Set operate undervoltage operation value for step *n*, given as % of the parameter *VBase*. The setting is highly dependent of the protection application. It is essential to consider the minimum voltage at non-faulted situations. Normally this voltage is larger than 90% of nominal voltage.

tn: time delay of step *n*, given in s. This setting is dependent of the protection application. In many applications the protection function shall not directly trip when there is a short circuit or ground faults in the system. The time delay must be coordinated to the short circuit protections.

tResetn: Reset time for step *n* if definite time delay is used, given in s. The default value is 25 ms.

tnMin: Minimum operation time for inverse time characteristic for step *n*, given in s. When using inverse time characteristic for the undervoltage function during very low voltages can give a short operation time. This might lead to unselective trip. By setting *t1Min* longer than the operation time for other protections such unselective tripping can be avoided.

ResetTypeCrvn: This parameter for inverse time characteristic can be set to *Instantaneous*, *Frozen time*, *Linearly decreased*. The default setting is*Instantaneous*.

tIResetn: Reset time for step *n* if inverse time delay is used, given in s. The default value is 25 ms.

TDn: Time multiplier for inverse time characteristic. This parameter is used for coordination between different inverse time delayed undervoltage protections.

ACrvn, *BCrvn*, *CCrvn*, *DCrvn*, *PCrvn*: Parameters to set to create programmable under voltage inverse time characteristic. Description of this can be found in the technical reference manual.

CrvSatn: When the denominator in the expression of the programmable curve is equal to zero the time delay will be infinity. There will be an undesired discontinuity. Therefore, a tuning parameter *CrvSatn* is set to compensate for this phenomenon. In the voltage interval Pickup> down to *Pickup*> · (1.0 - *CrvSatn*/100) the used voltage will be: *Pickup*>

· (1.0 - *CrvSatn*/100). If the programmable curve is used this parameter must be calculated so that:

$$B \cdot \frac{CrvSatn}{100} - C > 0$$

(Equation 93)

IntBlkSeln: This parameter can be set to *Disabled*, *Block of trip*, *Block all*. In case of a low voltage the undervoltage function can be blocked. This function can be used to prevent function when the protected object is switched off. If the parameter is set *Block of trip* or *Block all* unwanted trip is prevented.

IntBlkStValn: Voltage level under which the blocking is activated set in % of *VBase*. This setting must be lower than the setting *Pickupn*. As switch of shall be detected the setting can be very low, that is, about 10%.

tBlkUVn: Time delay to block the undervoltage step *n* when the voltage level is below *IntBlkStValn*, given in s. It is important that this delay is shorter than the operate time delay of the undervoltage protection step.

8.2 Two step overvoltage protection OV2PTOV (59)

8.2.1 Identification

Function description	IEC 61850 identification	IEC 60617 identification	ANSI/IEEE C37.2 device number
Two step overvoltage protection	OV2PTOV	*3U>*	59

8.2.2 Application

Two step overvoltage protection OV2PTOV (59) is applicable in all situations, where reliable detection of high voltage is necessary. OV2PTOV (59) is used for supervision and detection of abnormal conditions, which, in combination with other protection functions, increase the security of a complete protection system.

High overvoltage conditions are caused by abnormal situations in the power system. OV2PTOV (59) is applied to power system elements, such as generators, transformers,

motors and power lines in order to detect high voltage conditions. OV2PTOV (59) is used in combination with low current signals, to identify a transmission line, open in the remote end. In addition to that, OV2PTOV (59) is also used to initiate voltage correction measures, like insertion of shunt reactors, to compensate for low load, and thereby decreasing the voltage. The function has a high measuring accuracy and hysteresis setting to allow applications to control reactive load.

OV2PTOV (59) is used to disconnect apparatuses, like electric motors, which will be damaged when subject to service under high voltage conditions. It deals with high voltage conditions at power system frequency, which can be caused by:

1. Different kinds of faults, where a too high voltage appears in a certain power system, like metallic connection to a higher voltage level (broken conductor falling down to a crossing overhead line, transformer flash over fault from the high voltage winding to the low voltage winding and so on).
2. Malfunctioning of a voltage regulator or wrong settings under manual control (symmetrical voltage decrease).
3. Low load compared to the reactive power generation (symmetrical voltage decrease).
4. Ground-faults in high impedance grounded systems causes, beside the high voltage in the neutral, high voltages in the two non-faulted phases, (unsymmetrical voltage increase).

OV2PTOV (59) prevents sensitive equipment from running under conditions that could cause their overheating or stress of insulation material, and, thus, shorten their life time expectancy. In many cases, it is a useful function in circuits for local or remote automation processes in the power system.

8.2.3 Setting guidelines

The parameters for Two step overvoltage protection (OV2PTOV ,59) are set via the local HMI or PCM600.

All the voltage conditions in the system where OV2PTOV (59) performs its functions should be considered. The same also applies to the associated equipment, its voltage and time characteristic.

There is a very wide application area where general overvoltage functions are used. All voltage related settings are made as a percentage of a settable base primary voltage, which normally is set to the nominal voltage level (phase-to-phase) of the power system or the high voltage equipment under consideration.

The time delay for the OV2PTOV (59) can sometimes be critical and related to the size of the overvoltage - a power system or a high voltage component can withstand smaller overvoltages for some time, but in case of large overvoltages the related equipment should be disconnected more rapidly.

Some applications and related setting guidelines for the voltage level are given below:

The hysteresis is for overvoltage functions very important to prevent that a transient voltage over set level is not “sealed-in” due to a high hysteresis. Typical values should be ≤ 0.5%.

8.2.3.1 Equipment protection, such as for motors, generators, reactors and transformers

High voltage will cause overexcitation of the core and deteriorate the winding insulation. The setting has to be well above the highest occurring "normal" voltage and well below the highest acceptable voltage for the equipment.

8.2.3.2 Equipment protection, capacitors

High voltage will deteriorate the dielectricum and the insulation. The setting has to be well above the highest occurring "normal" voltage and well below the highest acceptable voltage for the capacitor.

8.2.3.3 Power supply quality

The setting has to be well above the highest occurring "normal" voltage and below the highest acceptable voltage, due to regulation, good practice or other agreements.

8.2.3.4 High impedance grounded systems

In high impedance grounded systems, ground-faults cause a voltage increase in the non-faulty phases. Two step overvoltage protection (OV2PTOV, 59) is used to detect such faults. The setting must be above the highest occurring "normal" voltage and below the lowest occurring voltage during faults. A metallic single-phase ground-fault causes the non-faulted phase voltages to increase a factor of √3.

8.2.3.5 The following settings can be done for the two step overvoltage protection

ConnType: Sets whether the measurement shall be phase-to-ground fundamental value, phase-to-phase fundamental value, phase-to-ground RMS value or phase-to-phase RMS value.

Operation: *Disabled*/*Enabled*.

VBase (given in *GlobalBaseSel*): Base voltage phase to phase in primary kV. This voltage is used as reference for voltage setting. OV2PTOV (59) measures selectively phase-to-ground voltages, or phase-to-phase voltage chosen by the setting *ConnType*. The function will operate if the voltage gets lower than the set percentage of *VBase*. When *ConnType* is

set to *PhN DFT* or *PhN RMS* then the IED automatically divides set value for *VBase* by √3. When *ConnType* is set to *PhPh DFT* or *PhPh RMS* then set value for *VBase* is used. Therefore, always set *VBase* as rated primary phase-to-phase ground voltage of the protected object. If phase to neutral (PhN) measurement is selected as setting, the operation of phase-to-earth over voltage is automatically divided by sqrt3. This means operation for phase-to-ground voltage over:

$$V > (\%) \cdot VBase(kV) / \sqrt{3}$$

(Equation 94)

and operation for phase-to-phase voltage over:

$$\text{Vpickup} > (\%) \cdot \text{VBase(kV)}$$

(Equation 95)

The below described setting parameters are identical for the two steps (n = 1 or 2). Therefore the setting parameters are described only once.

Characteristicn: This parameter gives the type of time delay to be used. The setting can be *Definite time*, *Inverse Curve A*, *Inverse Curve B*, *Inverse Curve C* or *I/Prog. inv. curve*. The choice is highly dependent of the protection application.

OpModen: This parameter describes how many of the three measured voltages that should be above the set level to give operation. The setting can be *1 out of 3*, *2 out of 3*, *3 out of 3*. In most applications it is sufficient that one phase voltage is high to give operation. If the function shall be insensitive for single phase-to-ground faults *1 out of 3* can be chosen, because the voltage will normally rise in the non-faulted phases at single phase-to-ground faults. In subtransmission and transmission networks the UV function is mainly a system supervision function and 3 out of 3 is selected.

Pickupn: Set operate overvoltage operation value for step *n*, given as % of *VBase*. The setting is highly dependent of the protection application. Here it is essential to consider the maximum voltage at non-faulted situations. Normally this voltage is less than 110% of nominal voltage.

tn: time delay of step *n*, given in s. The setting is highly dependent of the protection application. In many applications the protection function is used to prevent damages to the protected object. The speed might be important for example in case of protection of transformer that might be overexcited. The time delay must be co-ordinated with other automated actions in the system.

tResetn: Reset time for step *n* if definite time delay is used, given in s. The default value is 25 ms.

tnMin: Minimum operation time for inverse time characteristic for step *n*, given in s. For very high voltages the overvoltage function, using inverse time characteristic, can give very short operation time. This might lead to unselective trip. By setting *t1Min* longer than the operation time for other protections such unselective tripping can be avoided.

ResetTypeCrvn: This parameter for inverse time characteristic can be set: *Instantaneous*, *Frozen time*, *Linearly decreased*. The default setting is *Instantaneous*.

tIResetn: Reset time for step *n* if inverse time delay is used, given in s. The default value is 25 ms.

TDn: Time multiplier for inverse time characteristic. This parameter is used for co-ordination between different inverse time delayed undervoltage protections.

ACrvn, *BCrvn*, *CCrvn*, *DCrvn*, *PCrvn*: Parameters to set to create programmable under voltage inverse time characteristic. Description of this can be found in the technical reference manual.

CrvSatn: When the denominator in the expression of the programmable curve is equal to zero the time delay will be infinity. There will be an undesired discontinuity. Therefore a tuning parameter *CrvSatn* is set to compensate for this phenomenon. In the voltage interval *Pickup>* up to *Pickup>* · (1.0 + *CrvSatn*/100) the used voltage will be: *Pickup>* · (1.0 + *CrvSatn*/100). If the programmable curve is used, this parameter must be calculated so that:

$$B \cdot \frac{CrvSatn}{100} - C > 0$$

(Equation 96)

HystAbsn: Absolute hysteresis set in % of *VBase*. The setting of this parameter is highly dependent of the application. If the function is used as control for automatic switching of reactive compensation devices the hysteresis must be set smaller than the voltage change after switching of the compensation device.

8.3 Two step residual overvoltage protection ROV2PTOV (59N)

8.3.1 Identification

Function description	IEC 61850 identification	IEC 60617 identification	ANSI/IEEE C37.2 device number
Two step residual overvoltage protection	ROV2PTOV	3U0	59N

8.3.2 Application

Two step residual overvoltage protection ROV2PTOV (59N) is primarily used in high impedance grounded distribution networks, mainly as a backup for the primary ground fault protection of the feeders and the transformer. To increase the security for different ground fault related functions, the residual overvoltage signal can be used as a release signal. The residual voltage can be measured either at the transformer neutral or from a voltage transformer open delta connection. The residual voltage can also be calculated internally, based on measurement of the three-phase voltages.

In high impedance grounded systems the residual voltage will increase in case of any fault connected to ground. Depending on the type of fault and fault resistance the residual voltage will reach different values. The highest residual voltage, equal to three times the phase-to-ground voltage, is achieved for a single phase-to-ground fault. The residual voltage increases approximately to the same level in the whole system and does not provide any guidance in finding the faulted component. Therefore, ROV2PTOV (59N) is often used as a backup protection or as a release signal for the feeder ground fault protection.

8.3.3 Setting guidelines

All the voltage conditions in the system where ROV2PTOV (59N) performs its functions should be considered. The same also applies to the associated equipment, its voltage and time characteristic.

There is a very wide application area where general single input or residual overvoltage functions are used. All voltage related settings are made as a percentage of a settable base voltage, which can be set to the primary nominal voltage (phase-phase) level of the power system or the high voltage equipment under consideration.

The time delay for ROV2PTOV (59N) is seldom critical, since residual voltage is related to ground faults in a high impedance grounded system, and enough time must normally be given for the primary protection to clear the fault. In some more specific situations, where the single overvoltage protection is used to protect some specific equipment, the time delay is shorter.

Some applications and related setting guidelines for the residual voltage level are given below.

8.3.3.1 Equipment protection, such as for motors, generators, reactors and transformers

High residual voltage indicates ground fault in the system, perhaps in the component to which Two step residual overvoltage protection (ROV2PTOV, 59N) is connected. For selectivity reasons to the primary protection for the faulted device ROV2PTOV (59N) must trip the component with some time delay. The setting must be above the highest occurring "normal" residual voltage and below the highest acceptable residual voltage for the equipment

8.3.3.2 Equipment protection, capacitors

High voltage will deteriorate the dielectric and the insulation. Two step residual overvoltage protection (ROV2PTOV, 59N) has to be connected to a neutral or open delta winding. The setting must be above the highest occurring "normal" residual voltage and below the highest acceptable residual voltage for the capacitor.

8.3.3.3 Power supply quality

The setting must be above the highest occurring "normal" residual voltage and below the highest acceptable residual voltage, due to regulation, good practice or other agreements.

8.3.3.4 High impedance grounded systems

In high impedance grounded systems, ground faults cause a neutral voltage in the feeding transformer neutral. Two step residual overvoltage protection ROV2PTOV (59N) is used to trip the transformer, as a backup protection for the feeder ground fault protection, and as a backup for the transformer primary ground fault protection. The setting must be above the highest occurring "normal" residual voltage, and below the lowest occurring residual voltage during the faults under consideration. A metallic single-phase ground fault causes a transformer neutral to reach a voltage equal to the nominal phase-to-ground voltage.

The voltage transformers measuring the phase-to-ground voltages measure zero voltage in the faulty phase. The two healthy phases will measure full phase-to-phase voltage, as

the faulty phase will be connected to ground. The residual overvoltage will be three times the phase-to-ground voltage. See figure 78.

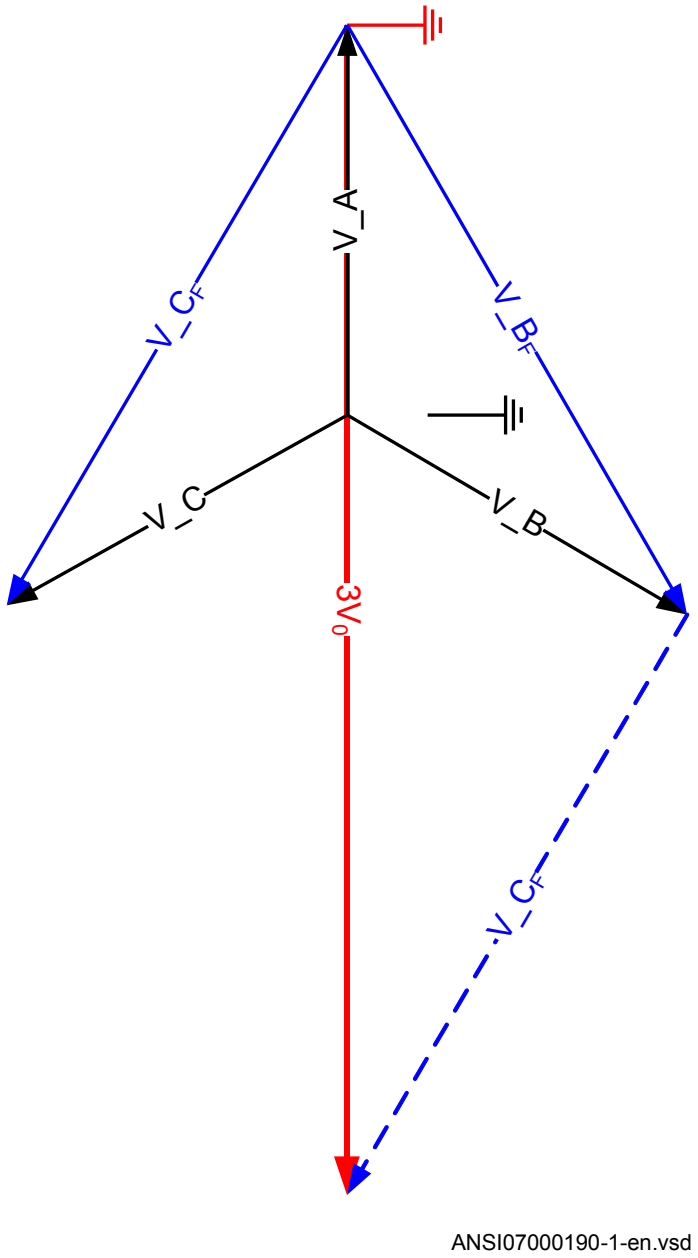

Figure 78: Ground fault in Non-effectively grounded systems

8.3.3.5 Direct grounded system

In direct grounded systems, an ground fault on one phase indicates a voltage collapse in that phase. The two healthy phases will have normal phase-to-ground voltages. The residual sum will have the same value as the remaining phase-to-ground voltage. See figure 79.

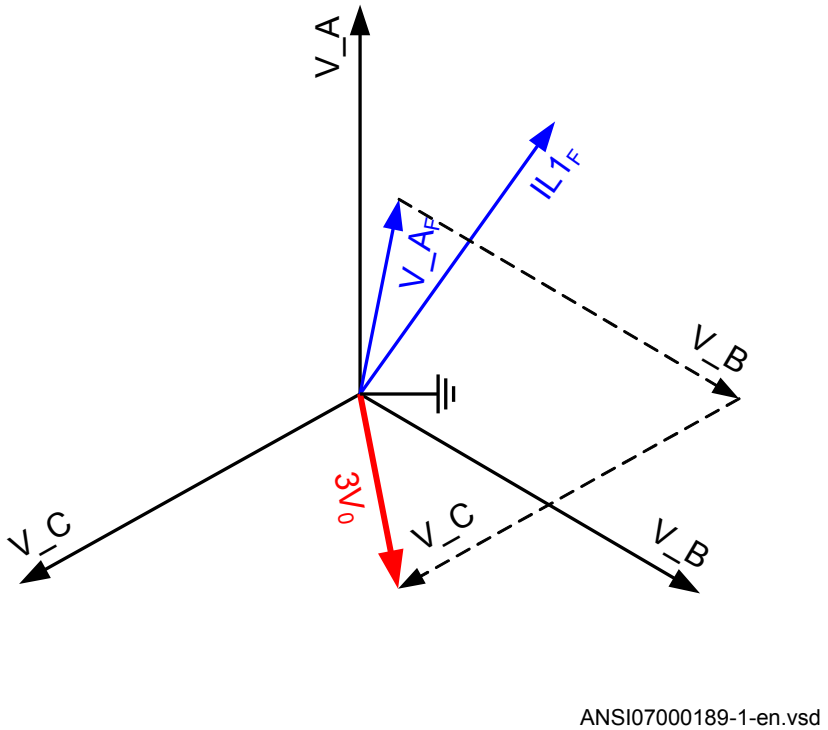

Figure 79: Ground fault in Direct grounded system

8.3.3.6 Settings for Two step residual overvoltage protection

Operation: *Disabled* or *Enabled*

VBase (given in *GlobalBaseSel*) is used as voltage reference for the voltage. The voltage can be fed to the IED in different ways:

1. The IED is fed from a normal voltage transformer group where the residual voltage is calculated internally from the phase-to-ground voltages within the protection. The setting of the analogue input is given as *VBase*=Vph-ph.
2. The IED is fed from a broken delta connection normal voltage transformer group. In an open delta connection the protection is fed by the voltage 3V0 (single input). The

Setting chapter in the application manual explains how the analog input needs to be set.

3. The IED is fed from a single voltage transformer connected to the neutral point of a power transformer in the power system. In this connection the protection is fed by the voltage VN=V0 (single input). The Setting chapter in the application manual explains how the analog input needs to be set. ROV2PTOV (59N) will measure the residual voltage corresponding nominal phase-to-ground voltage for a high impedance grounded system. The measurement will be based on the neutral voltage displacement.

The below described setting parameters are identical for the two steps (*n* = step 1 and 2). Therefore the setting parameters are described only once.

Characteristicn: Selected inverse time characteristic for step *n*. This parameter gives the type of time delay to be used. The setting can be, *Definite time* or *Inverse curve A* or *Inverse curve B* or *Inverse curve C* or *Prog. inv. curve*. The choice is highly dependent of the protection application.

Pickupn: Set operate overvoltage operation value for step *n*, given as % of residual voltage corresponding to *VBase*:

$$V > (\%) \cdot VBase(kV) / \sqrt{3}$$

(Equation 97)

The setting is dependent of the required sensitivity of the protection and the system grounding. In non-effectively grounded systems the residual voltage can be maximum the rated phase-to-ground voltage, which should correspond to 100%.

In effectively grounded systems this value is dependent of the ratio Z0/Z1. The required setting to detect high resistive ground faults must be based on network calculations.

tn: time delay of step *n*, given in s. The setting is highly dependent of the protection application. In many applications, the protection function has the task to prevent damages to the protected object. The speed might be important for example in case of protection of transformer that might be overexcited. The time delay must be co-ordinated with other automated actions in the system.

tResetn: Reset time for step *n* if definite time delay is used, given in s. The default value is 25 ms.

tnMin: Minimum operation time for inverse time characteristic for step *n*, given in s. For very high voltages the overvoltage function, using inverse time characteristic, can give very short operation time. This might lead to unselective trip. By setting *t1Min* longer than the operation time for other protections such unselective tripping can be avoided.

ResetTypeCrvn: Set reset type curve for step *n*. This parameter can be set: *Instantaneous*,*Frozen time*,*Linearly decreased*. The default setting is *Instantaneous*.

tIResetn: Reset time for step *n* if inverse time delay is used, given in s. The default value is 25 ms.

TDn: Time multiplier for inverse time characteristic. This parameter is used for co-ordination between different inverse time delayed undervoltage protections.

ACrvn, *BCrvn*, *CCrvn*, *DCrvn*, *PCrvn*: Parameters for step *n*, to set to create programmable undervoltage inverse time characteristic. Description of this can be found in the technical reference manual.

CrvSatn: Set tuning parameter for step *n*. When the denominator in the expression of the programmable curve is equal to zero the time delay will be infinity. There will be an undesired discontinuity. Therefore, a tuning parameter *CrvSatn* is set to compensate for this phenomenon. In the voltage interval *Pickup*> up to *Pickup*> · (1.0 + *CrvSatn*/100) the used voltage will be: *Pickup*> · (1.0 + *CrvSatn*/100). If the programmable curve is used this parameter must be calculated so that:

$$B \cdot \frac{CrvSatn}{100} - C > 0$$

(Equation 98)

HystAbsn: Absolute hysteresis for step *n*, set in % of *VBase*. The setting of this parameter is highly dependent of the application.

8.4 Voltage differential protection VDCPTOV (60)

8.4.1 Identification

Function description	IEC 61850 identification	IEC 60617 identification	ANSI/IEEE C37.2 device number
Voltage differential protection	VDCPTOV	-	60

8.4.2 Application

The Voltage differential protection VDCPTOV (60) functions can be used in some different applications.

- Voltage unbalance protection for capacitor banks. The voltage on the bus is supervised with the voltage in the capacitor bank, phase- by phase. Difference indicates a fault, either short-circuited or open element in the capacitor bank. It is

mainly used on elements with external fuses but can also be used on elements with internal fuses instead of a current unbalance protection measuring the current between the neutrals of two half's of the capacitor bank. The function requires voltage transformers in all phases of the capacitor bank. Figure 80 shows some different alternative connections of this function.

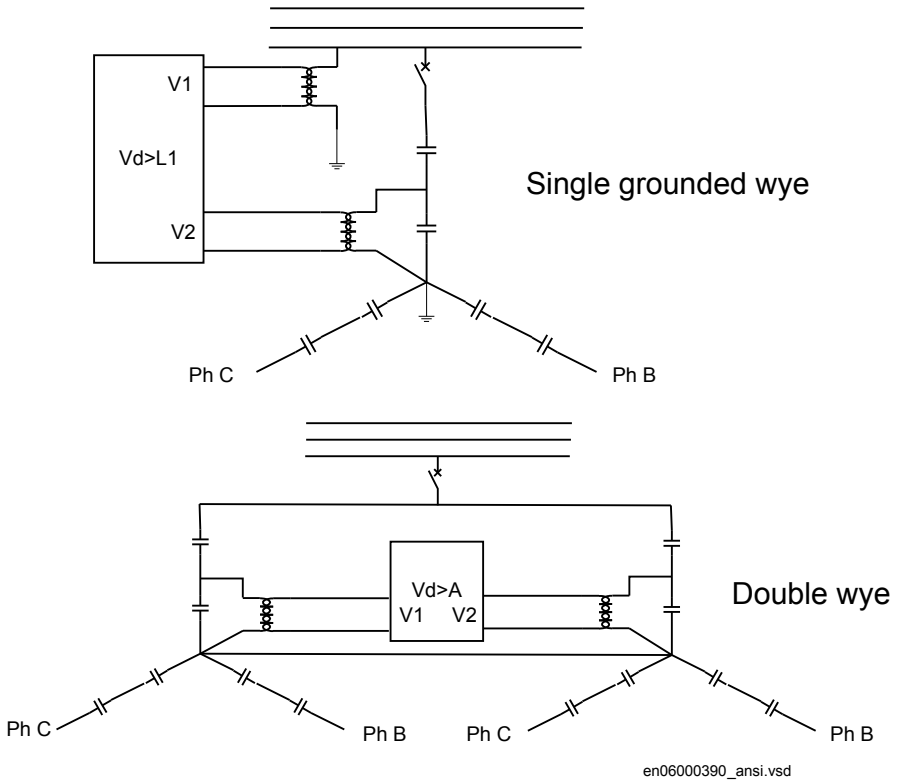

Figure 80: Connection of voltage differential protection VDCPTOV (60) function to detect unbalance in capacitor banks (one phase only is shown)

VDCPTOV (60) function has a block input (BLOCK) where a fuse failure supervision (or MCB tripped) can be connected to prevent problems if one fuse in the capacitor bank voltage transformer set has opened and not the other (capacitor voltage is connected to input V2). It will also ensure that a fuse failure alarm is given instead of a Undervoltage or Differential voltage alarm and/or tripping.

Fuse failure supervision (SDDRFUF) function for voltage transformers. In many application the voltages of two fuse groups of the same voltage transformer or fuse groups of two separate voltage transformers measuring the same voltage can be supervised with this function. It will be an alternative for example, generator units where often two voltage transformers are supplied for measurement and excitation equipment.

The application to supervise the voltage on two voltage transformers in the generator circuit is shown in figure 81.

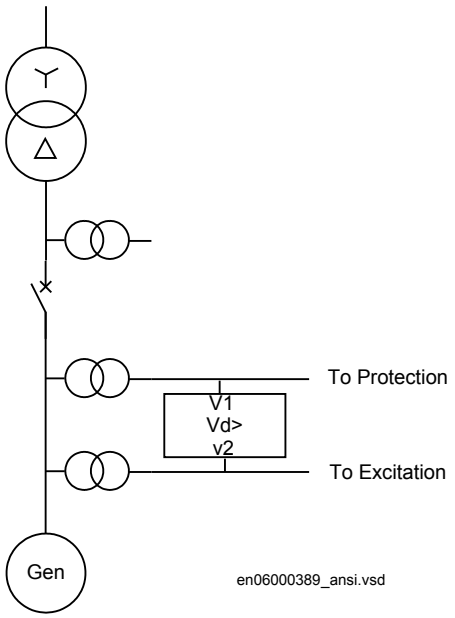

Figure 81: Supervision of fuses on generator circuit voltage transformers

8.4.3 Setting guidelines

The parameters for the voltage differential function are set via the local HMI or PCM600.

The following settings are done for the voltage differential function.

Operation: *Off/On*

GlobalBaseSel: Selects the global base value group used by the function to define (*IBase*), (*VBase*) and (*SBase*).

BlkDiffAtVLow: The setting is to block the function when the voltages in the phases are low.

RFLx: Is the setting of the voltage ratio compensation factor where possible differences between the voltages is compensated for. The differences can be due to different voltage transformer ratios, different voltage levels e.g. the voltage measurement inside the capacitor bank can have a different voltage level but the difference can also e.g. be used by voltage drop in the secondary circuits. The setting is normally done at site by evaluating

the differential voltage achieved as a service value for each phase. The factor is defined as V2 · *RFLx* and shall be equal to the V1 voltage. Each phase has its own ratio factor.

VDTrip: The voltage differential level required for tripping is set with this parameter. For application on capacitor banks the setting will depend of the capacitor bank voltage and the number of elements per phase in series and parallel. Capacitor banks must be tripped before excessive voltage occurs on the healthy capacitor elements. The setting values required are normally given by the capacitor bank supplier. For other applications it has to be decided case by case. For fuse supervision normally only the alarm level is used.

tTrip: The time delay for tripping is set by this parameter. Normally, the delay does not need to be so short in capacitor bank applications as there is no fault requiring urgent tripping.

tReset: The time delay for reset of tripping level element is set by this parameter. Normally, it can be set to a short delay as faults are permanent when they occur.

For the advanced users following parameters are also available for setting. Default values are here expected to be acceptable.

V1Low: The setting of the undervoltage level for the first voltage input is decided by this parameter. The proposed default setting is 70%.

V2Low: The setting of the undervoltage level for the second voltage input is decided by this parameter. The proposed default setting is 70%.

tBlock: The time delay for blocking of the function at detected undervoltages is set by this parameter.

VDAlarm: The voltage differential level required for alarm is set with this parameter. For application on capacitor banks the setting will depend of the capacitor bank voltage and the number of elements per phase in series and parallel. Normally values required are given by capacitor bank supplier.

For fuse supervision normally only this alarm level is used and a suitable voltage level is 3-5% if the ratio correction factor has been properly evaluated during commissioning.

For other applications it has to be decided case by case.

tAlarm: The time delay for alarm is set by this parameter. Normally, few seconds delay can be used on capacitor banks alarm. For fuse failure supervision (SDDRFUF) the alarm delay can be set to zero.

8.5 Loss of voltage check LOVPTUV (27)

8.5.1 Identification

Function description	IEC 61850 identification	IEC 60617 identification	ANSI/IEEE C37.2 device number
Loss of voltage check	LOVPTUV	-	27

8.5.2 Application

The trip of the circuit breaker at a prolonged loss of voltage at all the three phases is normally used in automatic restoration systems to facilitate the system restoration after a major blackout. Loss of voltage check (LOVPTUV, 27) generates a TRIP signal only if the voltage in all the three phases is low for more than the set time. If the trip to the circuit breaker is not required, LOVPTUV (27) is used for signallization only through an output contact or through the event recording function.

8.5.3 Setting guidelines

Loss of voltage check (LOVPTUV, 27) is in principle independent of the protection functions. It requires to be set to open the circuit breaker in order to allow a simple system restoration following a main voltage loss of a big part of the network and only when the voltage is lost with breakers still closed.

All settings are in primary values or per unit. Set *VBase* to rated voltage of the system or the voltage transformer primary rated voltage. Set operating level per phase *VPG* to typically 70% of rated *VBase* level. Set the time delay *tTrip*=5-20 seconds.

8.5.3.1 Advanced users settings

For advanced users the following parameters need also to be set. Set the length of the trip pulse to typical *tPulse*=0.15 sec. Set the blocking time *tBlock* to block Loss of voltage check (LOVPTUV, 27), if some but not all voltage are low, to typical 5.0 seconds and set the time delay for enabling the function after restoration *tRestore* to 3 - 40 seconds.

Section 9 Frequency protection

9.1 Underfrequency protection SAPTUF (81)

9.1.1 Identification

Function description	IEC 61850 identification	IEC 60617 identification	ANSI/IEEE C37.2 device number
Underfrequency protection	SAPTUF	*f* <	81

9.1.2 Application

Underfrequency protection SAPTUF (81) is applicable in all situations, where reliable detection of low fundamental power system frequency is needed. The power system frequency, and the rate of change of frequency, is a measure of the unbalance between the actual generation and the load demand. Low fundamental frequency in a power system indicates that the available generation is too low to fully supply the power demanded by the load connected to the power grid. SAPTUF (81) detects such situations and provides an output signal, suitable for load shedding, generator boosting, HVDC-set-point change, gas turbine start up and so on. Sometimes shunt reactors are automatically switched in due to low frequency, in order to reduce the power system voltage and hence also reduce the voltage dependent part of the load.

SAPTUF (81) is very sensitive and accurate and is used to alert operators that frequency has slightly deviated from the set-point, and that manual actions might be enough. The underfrequency signal is also used for overexcitation detection. This is especially important for generator step-up transformers, which might be connected to the generator but disconnected from the grid, during a roll-out sequence. If the generator is still energized, the system will experience overexcitation, due to the low frequency.

9.1.3 Setting guidelines

All the frequency and voltage magnitude conditions in the system where SAPTUF (81) performs its functions should be considered. The same also applies to the associated equipment, its frequency and time characteristic.

There are especially two specific application areas for SAPTUF (81):

1. to protect equipment against damage due to low frequency, such as generators, transformers, and motors. Overexcitation is also related to low frequency
2. to protect a power system, or a part of a power system, against breakdown, by shedding load, in generation deficit situations.

The underfrequency PICKUP value is set in Hz. All voltage magnitude related settings are made as a percentage of a settable base voltage, which normally is set to the nominal primary voltage level (phase-phase) of the power system or the high voltage equipment under consideration.

Some applications and related setting guidelines for the frequency level are given below:

Equipment protection, such as for motors and generators

The setting has to be well below the lowest occurring "normal" frequency and well above the lowest acceptable frequency for the equipment.

Power system protection, by load shedding

The setting has to be below the lowest occurring "normal" frequency and well above the lowest acceptable frequency for power stations, or sensitive loads. The setting level, the number of levels and the distance between two levels (in time and/or in frequency) depends very much on the characteristics of the power system under consideration. The size of the "largest loss of production" compared to "the size of the power system" is a critical parameter. In large systems, the load shedding can be set at a fairly high frequency level, and the time delay is normally not critical. In smaller systems the frequency PICKUP level has to be set at a lower value, and the time delay must be rather short.

The voltage related time delay is used for load shedding. The settings of SAPTUF (81) could be the same all over the power system. The load shedding is then performed firstly in areas with low voltage magnitude, which normally are the most problematic areas, where the load shedding also is most efficient.

9.1.3.1 Equipment protection, such as for motors and generators

The setting has to be well below the lowest occurring "normal" frequency and well above the lowest acceptable frequency for the equipment.

9.1.3.2 Power system protection, by load shedding

The setting has to be well below the lowest occurring "normal" frequency and well above the lowest acceptable frequency for power stations, or sensitive loads. The setting level, the number of levels and the distance between two levels (in time and/or in frequency) depends very much on the characteristics of the power system under consideration. The size of the "largest loss of production" compared to "the size of the power system" is a critical parameter. In large systems, the load shedding can be set at a fairly high frequency level, and the time delay is normally not critical. In smaller systems the frequency pickup level has to be set at a lower value, and the time delay must be rather short.

The voltage related time delay is used for load shedding. The settings of the underfrequency function could be the same all over the power system. The load shedding is then performed firstly in areas with low voltage magnitude, which normally are the most problematic areas, where the load shedding also is most efficient.

9.2 Overfrequency protection SAPTOF (81)

9.2.1 Identification

Function description	IEC 61850 identification	IEC 60617 identification	ANSI/IEEE C37.2 device number
Overfrequency protection	SAPTOF	*f* >	81

9.2.2 Application

Overfrequency protection function SAPTOF (81) is applicable in all situations, where reliable detection of high fundamental power system frequency is needed. The power system frequency, and rate of change of frequency, is a measure of the unbalance between the actual generation and the load demand. High fundamental frequency in a power system indicates that the available generation is too large compared to the power demanded by the load connected to the power grid. SAPTOF (81) detects such situations and provides an output signal, suitable for generator shedding, HVDC-set-point change and so on. SAPTOF (81) is very sensitive and accurate and can also be used to alert operators that frequency has slightly deviated from the set-point, and that manual actions might be enough.

9.2.3 Setting guidelines

All the frequency and voltage magnitude conditions in the system where SAPTOF (81) performs its functions must be considered. The same also applies to the associated equipment, its frequency and time characteristic.

There are especially two application areas for SAPTOF (81):

1. to protect equipment against damage due to high frequency, such as generators, and motors
2. to protect a power system, or a part of a power system, against breakdown, by shedding generation, in over production situations.

The overfrequency PICKUP value is set in Hz. All voltage magnitude related settings are made as a percentage of a settable base voltage, which normally is set to the nominal voltage level (phase-to-phase) of the power system or the high voltage equipment under consideration.

Some applications and related setting guidelines for the frequency level are given below:

Equipment protection, such as for motors and generators

The setting has to be well above the highest occurring "normal" frequency and well below the highest acceptable frequency for the equipment.

Power system protection, by generator shedding

The setting must be above the highest occurring "normal" frequency and below the highest acceptable frequency for power stations, or sensitive loads. The setting level, the number of levels and the distance between two levels (in time and/or in frequency) depend very much on the characteristics of the power system under consideration. The size of the "largest loss of load" compared to "the size of the power system" is a critical parameter. In large systems, the generator shedding can be set at a fairly low frequency level, and the time delay is normally not critical. In smaller systems the frequency PICKUP level has to be set at a higher value, and the time delay must be rather short.

9.2.3.1 Equipment protection, such as for motors and generators

The setting has to be well above the highest occurring "normal" frequency and well below the highest acceptable frequency for the equipment.

9.2.3.2 Power system protection, by generator shedding

The setting level, the number of levels and the distance between two levels (in time and/or in frequency) depend very much on the characteristics of the power system under consideration. The size of the "largest loss of load" compared to "the size of the power

system" is a critical parameter. In large systems, the generator shedding can be set at a fairly low frequency level, and the time delay is normally not critical. In smaller systems the frequency pickup level has to be set at a higher value, and the time delay must be rather short.

9.3 Rate-of-change frequency protection SAPFRC (81)

9.3.1 Identification

Function description	IEC 61850 identification	IEC 60617 identification	ANSI/IEEE C37.2 device number
Rate-of-change frequency protection	SAPFRC	*df/dt* ≷	81

9.3.2 Application

Rate-of-change frequency protection (SAPFRC, 81), is applicable in all situations, where reliable detection of change of the fundamental power system voltage frequency is needed. SAPFRC (81) can be used both for increasing frequency and for decreasing frequency. SAPFRC (81) provides an output signal, suitable for load shedding or generator shedding, generator boosting, HVDC-set-point change, gas turbine start up and so on. Very often SAPFRC (81) is used in combination with a low frequency signal, especially in smaller power systems, where loss of a fairly large generator will require quick remedial actions to secure the power system integrity. In such situations load shedding actions are required at a rather high frequency level, but in combination with a large negative rate-of-change of frequency the underfrequency protection can be used at a rather high setting.

9.3.3 Setting guidelines

The parameters for Rate-of-change frequency protection SAPFRC (81) are set via the local HMI or PCM600.

All the frequency and voltage magnitude conditions in the system where SAPFRC (81) performs its functions should be considered. The same also applies to the associated equipment, its frequency and time characteristic.

There are especially two application areas for SAPFRC (81):

1. to protect equipment against damage due to high or too low frequency, such as generators, transformers, and motors
2. to protect a power system, or a part of a power system, against breakdown by shedding load or generation, in situations where load and generation are not in balance.

SAPFRC (81) is normally used together with an overfrequency or underfrequency function, in small power systems, where a single event can cause a large imbalance between load and generation. In such situations load or generation shedding has to take place very quickly, and there might not be enough time to wait until the frequency signal has reached an abnormal value. Actions are therefore taken at a frequency level closer to the primary nominal level, if the rate-of-change frequency is large (with respect to sign).

SAPFRC (81)PICKUP value is set in Hz/s. All voltage magnitude related settings are made as a percentage of a settable base voltage, which normally is set to the primary nominal voltage level (phase-phase) of the power system or the high voltage equipment under consideration.

SAPFRC (81) is not instantaneous, since the function needs some time to supply a stable value. It is recommended to have a time delay long enough to take care of signal noise. However, the time, rate-of-change frequency and frequency steps between different actions might be critical, and sometimes a rather short operation time is required, for example, down to 70 ms.

Smaller industrial systems might experience rate-of-change frequency as large as 5 Hz/s, due to a single event. Even large power systems may form small islands with a large imbalance between load and generation, when severe faults (or combinations of faults) are cleared - up to 3 Hz/s has been experienced when a small island was isolated from a large system. For more "normal" severe disturbances in large power systems, rate-of-change of frequency is much less, most often just a fraction of 1.0 Hz/s.

9.4 Frequency time accumulation protection function FTAQFVR (81A)

9.4.1 Identification

Function description	IEC 61850 identification	IEC 60617 identification	ANSI/ IEEEidentification
Frequency time accumulation protection	FTAQFVR	f<>	81A

9.4.2 Application

Generator prime movers are affected by abnormal frequency disturbances. Significant frequency deviations from rated frequency occur in case of major disturbances in the system. A rise of frequency occurs in case of generation surplus, while a lack of generation results in a drop of frequency.

The turbine blade is designed with its natural frequency adequately far from the rated speed or multiples of the rated speed of the turbine. This design avoids the mechanical resonant condition, which can lead to an increased mechanical stress on turbine blade. If the ratio between the turbine resonant frequencies to the system operating frequency is nearly equal to 1, mechanical stress on the blades is approximately 300 times the nonresonant operating condition stress values. The stress magnification factor is shown in the typical resonance curve in Figure 82.

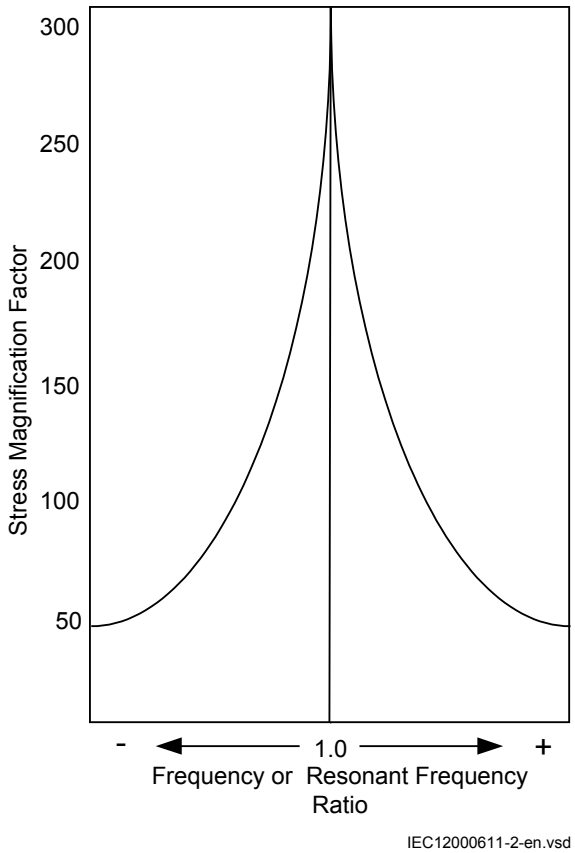

Figure 82: Typical stress magnification factor curve according ANSI/IEEE C37.106-2003 Standard

Each turbine manufactured for different design of blades has various time restriction limits for various frequency bands. The time limits depend on the natural frequencies of

the blades inside the turbine, corrosion and erosion of the blade edges and additional loss of blade lifetime during the abnormal operating conditions.

The frequency limitations and their time restrictions for different types of turbines are similar in many aspects with steam turbine limitations. Certain differences in design and applications may result in different protective requirements. Therefore, for different type of turbine systems, different recommendations on the time restriction limits are specified by the manufacturer.

However, the IEEE/ANSI C37.106-2003 standard "Guide for Abnormal Frequency Protection for Power Generating Plants" provides some examples where the time accumulated within each frequency range is as shown in Figure 83.

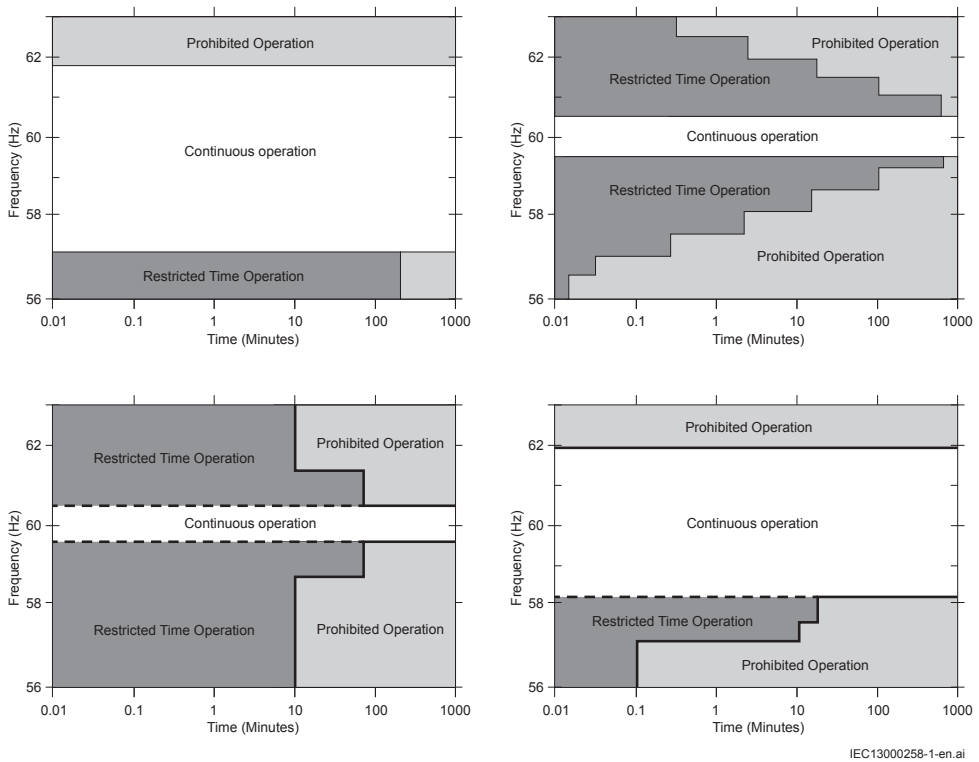

Figure 83: Examples of time frequency characteristics with various frequency band limits

Another application for the FTAQFVR (81A) protection function is to supervise variations from rated voltage-frequency. Generators are designed to accommodate the IEC 60034-3:1996 requirement of continuous operation within the confines of their capability curves over the ranges of +/-5% in voltage and +/-2% in frequency. Operation of the machine at rated power outside these voltage-frequency limits lead to increased temperatures and reduction of insulation life.

9.4.3 Setting guidelines

Among the generator protection functions, the frequency time accumulation protection FTAQFVR (81A) may be used to protect the generator as well as the turbine. Abnormal frequencies during normal operation cause material fatigue on turbine blades, trip points and time delays should be established based on the turbine manufacture's requirements and recommendations.

Continuous operation of the machine at rated power outside voltage-frequency limits lead to increased rotor temperatures and reduction of insulation life. Setting of extent, duration and frequency of occurrence should be set according to manufacture's requirements and recommendations.

Setting procedure on the IED

The parameters for the frequency time accumulation protection FTAQFVR (81A) are set using the local HMI or through the dedicated software tool in Protection and Control Manager (PCM600).

Common base IED values for primary current *IBase* and primary voltage *VBase* are set in the global base values for settings function GBASVAL. The *GlobalBaseSel* is used to select GBASVAL for the reference of base values.

FTAQFVR (81A) used to protect a turbine:

Frequency during start-up and shutdown is normally not calculated, consequently the protection function is blocked by CB position, parameter *CBCheck* enabled. If the generator supply any load when CB is in open position e.g. excitation equipment and auxiliary services this may be considered as normal condition and *CBCheck* is ignored when the load current is higher then the set value of *PickupCurrentLevel*. Set the current level just above minimum load.

EnaVoltCheck set to *Disable*.

tCont: to be coordinated to the grid requirements.

tAccLimit, *FreqHighLimit* and *FreqLowLimit* setting is derived from the turbine manufacturer's operating requirements, note that *FreqLowLimit* setting must always be lower than the set value of *FreqHighLimit*.

FTAQFVR (81A) used to protect a generator:

Frequency during start-up and shutdown is normally not calculated, consequently the protection function is blocked by CB position, parameter *CBCheck* enabled.

PickupCurrentLevel set to *Disable*.

EnaVoltCheck set to *Enable*, voltage and frequency limits set according to the generators manufacturer's operating requirements. Voltage and frequency settings should also be coordinated with the pickup values for over and underexcitation protection.

tCont: to be coordinated to the grid requirements.

tAccLimit, *FreqHighLimit* and *FreqLowLimit* setting is derived from the generator manufacturer's operating requirements.

Section 10 Multipurpose protection

10.1 General current and voltage protection CVGAPC

10.1.1 Identification

Function description	IEC 61850 identification	IEC 60617 identification	ANSI/IEEE C37.2 device number
General current and voltage protection	CVGAPC	2(I>/U<)	-

10.1.2 Application

A breakdown of the insulation between phase conductors or a phase conductor and ground results in a short circuit or a ground fault respectively. Such faults can result in large fault currents and may cause severe damage to the power system primary equipment. Depending on the magnitude and type of the fault different overcurrent protections, based on measurement of phase, ground or sequence current components can be used to clear these faults. Additionally it is sometimes required that these overcurrent protections shall be directional and/or voltage controlled/restrained.

The over/under voltage protection is applied on power system elements, such as generators, transformers, motors and power lines in order to detect abnormal voltage conditions. Depending on the type of voltage deviation and type of power system abnormal condition different over/under voltage protections based on measurement of phase-to-ground, phase-to-phase, residual- or sequence- voltage components can be used to detect and operate for such incident.

The IED can be provided with multiple General current and voltage protection (CVGAPC) protection modules. The function is always connected to three-phase current and three-phase voltage input in the configuration tool, but it will always measure only one current and one voltage quantity selected by the end user in the setting tool.

Each CVGAPC function module has got four independent protection elements built into it.

1. Two overcurrent steps with the following built-in features:

- Definite time delay or Inverse Time Overcurrent TOC/IDMT delay for both steps
- Second harmonic supervision is available in order to only allow operation of the overcurrent stage(s) if the content of the second harmonic in the measured current is lower than pre-set level
- Directional supervision is available in order to only allow operation of the overcurrent stage(s) if the fault location is in the pre-set direction (*Forward* or *Reverse*). Its behavior during low-level polarizing voltage is settable (*Non-Directional*,*Block*,*Memory*)
- Voltage restrained/controlled feature is available in order to modify the pick-up level of the overcurrent stage(s) in proportion to the magnitude of the measured voltage
- Current restrained feature is available in order to only allow operation of the overcurrent stage(s) if the measured current quantity is bigger than the set percentage of the current restrain quantity.

2. Two undercurrent steps with the following built-in features:
   - Definite time delay for both steps
3. Two overvoltage steps with the following built-in features
   - Definite time delay or Inverse Time Overcurrent TOC/IDMT delay for both steps
4. Two undervoltage steps with the following built-in features
   - Definite time delay or Inverse Time Overcurrent TOC/IDMT delay for both steps

All these four protection elements within one general protection function works independently from each other and they can be individually enabled or disabled. However it shall be once more noted that all these four protection elements measure one selected current quantity and one selected voltage quantity (see table 21 and table 22). It is possible to simultaneously use all four-protection elements and their individual stages. Sometimes in order to obtain desired application functionality it is necessary to provide interaction between two or more protection elements/stages within one CVGAPC function by appropriate IED configuration (for example, dead machine protection for generators).

10.1.2.1 Current and voltage selection for CVGAPC function

CVGAPC function is always connected to three-phase current and three-phase voltage input in the configuration tool, but it will always measure only the single current and the single voltage quantity selected by the end user in the setting tool (selected current quantity and selected voltage quantity).

The user can select, by a setting parameter *CurrentInput*, to measure one of the following current quantities shown in table 21.

Table 21: Available selection for current quantity within CVGAPC function

	Set value for parameter "CurrentInput"	Comment
1	*PhaseA*	CVGAPC function will measure the phase A current phasor
2	*PhaseB*	CVGAPC function will measure the phase B current phasor
3	*PhaseC*	CVGAPC function will measure the phase C current phasor
4	*PosSeq*	CVGAPC function will measure internally calculated positive sequence current phasor
5	*NegSeq*	CVGAPC function will measure internally calculated negative sequence current phasor
6	*3 · ZeroSeq*	CVGAPC function will measure internally calculated zero sequence current phasor multiplied by factor 3
7	*MaxPh*	CVGAPC function will measure current phasor of the phase with maximum magnitude
8	*MinPh*	CVGAPC function will measure current phasor of the phase with minimum magnitude
9	*UnbalancePh*	CVGAPC function will measure magnitude of unbalance current, which is internally calculated as the algebraic magnitude difference between the current phasor of the phase with maximum magnitude and current phasor of the phase with minimum magnitude. Phase angle will be set to 0° all the time
10	*PhaseA-PhaseB*	CVGAPC function will measure the current phasor internally calculated as the vector difference between the phase A current phasor and phase B current phasor (VA-VB)
11	*PhaseB-PhaseC*	CVGAPC function will measure the current phasor internally calculated as the vector difference between the phase B current phasor and phase C current phasor (VB-VC)
12	*PhaseC-PhaseA*	CVGAPC function will measure the current phasor internally calculated as the vector difference between the phase C current phasor and phase A current phasor (VC-VA)
13	*MaxPh-Ph*	CVGAPC function will measure ph-ph current phasor with the maximum magnitude
14	*MinPh-Ph*	CVGAPC function will measure ph-ph current phasor with the minimum magnitude
15	*UnbalancePh-Ph*	CVGAPC function will measure magnitude of unbalance current, which is internally calculated as the algebraic magnitude difference between the ph-ph current phasor with maximum magnitude and ph-ph current phasor with minimum magnitude. Phase angle will be set to 0° all the time

The user can select, by a setting parameter *VoltageInput*, to measure one of the following voltage quantities shown in table 22.

Table 22: Available selection for voltage quantity within CVGAPC function

	Set value for parameter "VoltageInput"	Comment
1	*PhaseA*	CVGAPC function will measure the phase A voltage phasor
2	*PhaseB*	CVGAPC function will measure the phase B voltage phasor
3	*PhaseC*	CVGAPC function will measure the phase C voltage phasor
4	*PosSeq*	CVGAPC function will measure internally calculated positive sequence voltage phasor
5	*-NegSeq*	CVGAPC function will measure internally calculated negative sequence voltage phasor. This voltage phasor will be intentionally rotated for 180° in order to enable easier settings for the directional feature when used.
6	*-3*ZeroSeq*	CVGAPC function will measure internally calculated zero sequence voltage phasor multiplied by factor 3. This voltage phasor will be intentionally rotated for 180° in order to enable easier settings for the directional feature when used.
7	*MaxPh*	CVGAPC function will measure voltage phasor of the phase with maximum magnitude
8	*MinPh*	CVGAPC function will measure voltage phasor of the phase with minimum magnitude
9	*UnbalancePh*	CVGAPC function will measure magnitude of unbalance voltage, which is internally calculated as the algebraic magnitude difference between the voltage phasor of the phase with maximum magnitude and voltage phasor of the phase with minimum magnitude. Phase angle will be set to 0° all the time
10	*PhaseA-PhaseB*	CVGAPC function will measure the voltage phasor internally calculated as the vector difference between the phase A voltage phasor and phase B voltage phasor (VA-VB)
11	*PhaseB-PhaseC*	CVGAPC function will measure the voltage phasor internally calculated as the vector difference between the phase B voltage phasor and phase C voltage phasor (VB-VC)
12	*PhaseC-PhaseC*	CVGAPC function will measure the voltage phasor internally calculated as the vector difference between the phase C voltage phasor and phase A voltage phasor (VC-VA)
13	*MaxPh-Ph*	CVGAPC function will measure ph-ph voltage phasor with the maximum magnitude
14	*MinPh-Ph*	CVGAPC function will measure ph-ph voltage phasor with the minimum magnitude
15	*UnbalancePh-Ph*	CVGAPC function will measure magnitude of unbalance voltage, which is internally calculated as the algebraic magnitude difference between the ph-ph voltage phasor with maximum magnitude and ph-ph voltage phasor with minimum magnitude. Phase angle will be set to 0° all the time

It is important to notice that the voltage selection from table 22 is always applicable regardless the actual external VT connections. The three-phase VT inputs can be connected to IED as either three phase-to-groundvoltages VA, VB and VC or three phase-

to-phase voltages VAB, VBC and VCA. This information about actual VT connection is entered as a setting parameter for the pre-processing block, which will then take automatically care about it.

10.1.2.2 Base quantities for CVGAPC function

The parameter settings for the base quantities, which represent the base (100%) for pickup levels of all measuring stages shall be entered as setting parameters for every CVGAPC function.

Base current shall be entered as:

1. rated phase current of the protected object in primary amperes, when the measured Current Quantity is selected from 1 to 9, as shown in table 21.
2. rated phase current of the protected object in primary amperes multiplied by √3 (1.732 x Iphase), when the measured Current Quantity is selected from 10 to 15, as shown in table 21.

Base voltage shall be entered as:

1. rated phase-to-ground voltage of the protected object in primary kV, when the measured Voltage Quantity is selected from 1 to 9, as shown in table 22.
2. rated phase-to-phase voltage of the protected object in primary kV, when the measured Voltage Quantity is selected from 10 to 15, as shown in table 22.

10.1.2.3 Application possibilities

Due to its flexibility the general current and voltage protection (CVGAPC) function can be used, with appropriate settings and configuration in many different applications. Some of possible examples are given below:

1. Transformer and line applications:
   - Underimpedance protection (circular, non-directional characteristic) (21)
   - Underimpedance protection (circular mho characteristic) (21)
   - Voltage Controlled/Restrained Overcurrent protection (51C, 51V)
   - Phase or Negative/Positive/Zero Sequence (Non-Directional or Directional) Overcurrent protection (50, 51, 46, 67, 67N, 67Q)
   - Phase or phase-to-phase or Negative/Positive/Zero Sequence over/under voltage protection (27, 59, 47)
   - Special thermal overload protection (49)
   - Open Phase protection
   - Unbalance protection
2. Generator protection

- 80-95% Stator earth fault protection (measured or calculated 3Vo) (59GN)
- Rotor earth fault protection (with external COMBIFLEX RXTTE4 injection unit) (64F)
- Underimpedance protection (21)
- Voltage Controlled/Restrained Overcurrent protection (51C, 51V)
- Turn-to-Turn & Differential Backup protection (directional Negative Sequence. Overcurrent protection connected to generator HV terminal CTs looking into generator) (67Q)
- Stator Overload protection (49S)
- Rotor Overload protection (49R)
- Loss of Excitation protection (directional pos. seq. OC protection) (40)
- Reverse power/Low forward power protection (directional pos. seq. OC protection, 2% sensitivity) (32)
- Dead-Machine/Inadvertent-Energizing protection (51/27)
- Breaker head flashover protection
- Improper synchronizing detection
- Sensitive negative sequence generator over current protection and alarm (46)
- Phase or phase-to-phase or Negative/Positive/Zero Sequence over/under voltage protection (27x, 59x, 47)
- Generator out-of-step detection (based on directional pos. seq. OC) (78)
- Inadvertent generator energizing

10.1.2.4 Inadvertent generator energization

When the generator is taken out of service, and stand-still, there is a risk that the generator circuit breaker is closed by mistake.

Three-phase energizing of a generator, which is at standstill or on turning gear, causes it to behave and accelerate similarly to an induction motor. The machine, at this point, essentially represents the subtransient reactance to the system and it can be expected to draw from one to four per unit current, depending on the equivalent system impedance. Machine terminal voltage can range from 20% to 70% of rated voltage, again, depending on the system equivalent impedance (including the block transformer). Higher quantities of machine current and voltage (3 to 4 per unit current and 50% to 70% rated voltage) can be expected if the generator is connected to a strong system. Lower current and voltage values (1 to 2 per unit current and 20% to 40% rated voltage) are representative of weaker systems.

Since a generator behaves similarly to an induction motor, high currents will develop in the rotor during the period it is accelerating. Although the rotor may be thermally damaged from excessive high currents, the time to damage will be on the order of a few seconds. Of more critical concern, however, is the bearing, which can be damaged in a fraction of a second due to low oil pressure. Therefore, it is essential that high speed tripping is provided. This tripping should be almost instantaneous (< 100 ms).

There is a risk that the current into the generator at inadvertent energization will be limited so that the “normal” overcurrent or underimpedance protection will not detect the dangerous situation. The delay of these protection functions might be too long. The reverse power protection might detect the situation but the operation time of this protection is normally too long.

For big and important machines, fast protection against inadvertent energizing should, therefore, be included in the protective scheme.

The protection against inadvertent energization can be made by a combination of undervoltage, overvoltage and overcurrent protection functions. The undervoltage function will, with a delay for example 10 s, detect the situation when the generator is not connected to the grid (standstill) and activate the overcurrent function. The overvoltage function will detect the situation when the generator is taken into operation and will disable the overcurrent function. The overcurrent function will have a pick-up value about 50% of the rated current of the generator. The trip delay will be about 50 ms.

10.1.3 Setting guidelines

When inverse time overcurrent characteristic is selected, the operate time of the stage will be the sum of the inverse time delay and the set definite time delay. Thus, if only the inverse time delay is required, it is of utmost importance to set the definite time delay for that stage to zero.

The parameters for the general current and voltage protection function (CVGAPC) are set via the local HMI or Protection and Control Manager (PCM600).

The overcurrent steps has a *IMinx* (*x*=1 or 2 depending on step) setting to set the minimumpickup current. Set *IMinx* below *PickupCurr_OCx* for every step to achieve ANSI reset characteristic according to standard. If *IMinx* is set above *PickupCurr_OCx* for any step the ANSI reset works as if current is zero when current drops below *IMinx*.

10.1.3.1 Directional negative sequence overcurrent protection

Directional negative sequence overcurrent protection is typically used as sensitive ground-fault protection of power lines where incorrect zero sequence polarization may result from mutual induction between two or more parallel lines. Additionally, it can be used in applications on underground cables where zero-sequence impedance depends on the fault current return paths, but the cable negative-sequence impedance is practically constant. It shall be noted that directional negative sequence OC element offers protection against all unbalance faults (phase-to-phase faults as well). Care shall be taken that the

minimum pickup of such protection function shall be set above natural system unbalance level.

An example will be given, how sensitive-ground-fault protection for power lines can be achieved by using negative-sequence directional overcurrent protection elements within a CVGAPC function.

This functionality can be achieved by using one CVGAPC function. The following shall be done to ensure proper operation of the function:

1. Connect three-phase power line currents and three-phase power line voltages to one CVGAPC instance (for example, GF04)
2. Set *CurrentInput* to *NegSeq* (please note that CVGAPC function measures I2 current and NOT 3I2 current; this is essential for proper OC pickup level setting)
3. Set *VoltageInput* to -*NegSeq* (please note that the negative sequence voltage phasor is intentionally inverted in order to simplify directionality
4. Set base current *IBase* value equal to the rated primary current of power line CTs
5. Set base voltage *UBase* value equal to the rated power line phase-to-phase voltage in kV
6. Set *RCADir* to value +65 degrees (*NegSeq* current typically lags the inverted *NegSeq* voltage for this angle during the fault)
7. Set *ROADir* to value 90 degree
8. Set *LowVolt_VM* to value 2% (*NegSeq* voltage level above which the directional element will be enabled)
9. Enable one overcurrent stage (for example, OC1)
10. By parameter *CurveType_OC1* select appropriate TOC/IDMT or definite time delayed curve in accordance with your network protection philosophy
11. Set *PickupCurr_OC1* to value between 3-10% (typical values)
12. Set *tDef_OC1* or parameter “TD” when TOC/IDMT curves are used to insure proper time coordination with other ground-fault protections installed in the vicinity of this power line
13. Set *DirMode_OC1* to *Forward*
14. Set *DirPrinc_OC1* to *IcosPhi&U*
15. Set *ActLowVolt1_VM* to *Block*
    - In order to insure proper restraining of this element for CT saturations during three-phase faults it is possible to use current restraint feature and enable this element to operate only when *NegSeq* current is bigger than a certain percentage (10% is typical value) of measured *PosSeq* current in the power line. To do this the following settings within the same function shall be done:
16. Set *EnRestrainCurr* to *On*
17. Set *RestrCurrInput* to *PosSeq*
18. Set *RestrCurrCoeff* to value 0.1

If required, this CVGAPC function can be used in directional comparison protection scheme for the power line protection if communication channels to the remote end of this power line are available. In that case typically two *NegSeq* overcurrent steps are required. One for forward and one for reverse direction. As explained before the OC1 stage can be used to detect faults in forward direction. The built-in OC2 stage can be used to detect faults in reverse direction.

However the following shall be noted for such application:

- the set values for *RCADir* and *ROADir* settings will be as well applicable for OC2 stage
- setting *DirMode_OC2* shall be set to *Reverse*
- setting parameter *PickupCurr_OC2* shall be made more sensitive than pickup value of forward OC1 element (that is, typically 60% of OC1 set pickup level) in order to insure proper operation of the directional comparison scheme during current reversal situations
- pickup signals from OC1 and OC2 elements shall be used to send forward and reverse signals to the remote end of the power line
- the available scheme communications function block within IED shall be used between multipurpose protection function and the communication equipment in order to insure proper conditioning of the above two pickup signals

Furthermore the other built-in UC, OV and UV protection elements can be used for other protection and alarming purposes.

10.1.3.2 Negative sequence overcurrent protection

Example will be given how to use one CVGAPC function to provide negative sequence inverse time overcurrent protection for a generator with capability constant of 20s, and maximum continuous negative sequence rating of 7% of the generator rated current.

The capability curve for a generator negative sequence overcurrent protection, often used world-wide, is defined by the ANSI standard in accordance with the following formula:

$$t_{op} = \frac{TD}{\left(\frac{I_{NS}}{I_r}\right)^2}$$

(Equation 99)

where:

t_{op}	is the operating time in seconds of the negative sequence overcurrent IED
TD	is the generator capability constant in seconds
I_{NS}	is the measured negative sequence current
I_r	is the generator rated current

By defining parameter x equal to maximum continuous negative sequence rating of the generator in accordance with the following formula

$$x = 7\% = 0.07\,pu$$

(Equation 100)

Equation 99 can be re-written in the following way without changing the value for the operate time of the negative sequence inverse overcurrent IED:

$$t_{op} = \frac{TD \cdot \frac{1}{x^2}}{\left(\frac{I_{NS}}{x \cdot I_r}\right)^2}$$

(Equation 101)

In order to achieve such protection functionality with one CVGAPC functions the following must be done:

1. Connect three-phase generator currents to one CVGAPC instance (for example, GF01)
2. Set parameter *CurrentInput* to value *NegSeq*
3. Set base current value to the rated generator current in primary amperes
4. Enable one overcurrent step (for example, OC1)
5. Select parameter *CurveType_OC1* to value *Programmable*

$$t_{op} = TD \cdot \left(\frac{A}{M^P - C} + B \right)$$

(Equation 102)

where:

top	is the operating time in seconds of the Inverse Time Overcurrent TOC/IDMT algorithm
TD	is time multiplier (parameter setting)
M	is ratio between measured current magnitude and set pickup current level
A, B, C and P	are user settable coefficients which determine the curve used for Inverse Time Overcurrent TOC/IDMT calculation

When the equation 99 is compared with the equation 101 for the inverse time characteristic of the OC1 it is obvious that if the following rules are followed:

1. set TD equal to the generator negative sequence capability value
2. set *A_OC1* equal to the value 1/x2
3. set *B_OC1* = 0.0, *C_OC1*=0.0 and *P_OC1*=2.0
4. set *PickupCurr_OC1* equal to the value x

then the OC1 step of the CVGAPC function can be used for generator negative sequence inverse overcurrent protection.

For this particular example the following settings shall be entered to insure proper function operation:

1. select negative sequence current as measuring quantity for this CVGAPC function
2. make sure that the base current value for the CVGAPC function is equal to the generator rated current
3. set *TD_OC1* = 20
4. set *A_OC1*= $1/0.07^2$ = 204.0816
5. set *B_OC1* = 0.0, C_OC1 = 0.0 and *P_OC1* = 2.0
6. set *PickupCurr_OC1* = 7%

Proper timing of the CVGAPC function made in this way can easily be verified by secondary injection. All other settings can be left at the default values. If required delayed time reset for OC1 step can be set in order to ensure proper function operation in case of repetitive unbalance conditions.

Furthermore the other built-in protection elements can be used for other protection and alarming purposes (for example, use OC2 for negative sequence overcurrent alarm and OV1 for negative sequence overvoltage alarm).

10.1.3.3 Generator stator overload protection in accordance with IEC or ANSI standards

Example will be given how to use one CVGAPC function to provide generator stator overload protection in accordance with IEC or ANSI standard if minimum-operating current shall be set to 116% of generator rating.

The generator stator overload protection is defined by IEC or ANSI standard for turbo generators in accordance with the following formula:

$$t_{op} = \frac{TD}{\left(\frac{I_m}{I_r}\right)^2 - 1}$$

(Equation 103)

where:

t_{op}	is the operating time of the generator stator overload IED
TD	is the generator capability constant in accordance with the relevant standard (TD = 37.5 for the IEC standard or TD = 41.4 for the ANSI standard)
I_m	is the magnitude of the measured current
I_r	is the generator rated current

This formula is applicable only when measured current (for example, positive sequence current) exceeds a pre-set value (typically in the range from 105 to 125% of the generator rated current).

By defining parameter x equal to the per unit value for the desired pickup for the overload IED in accordance with the following formula:

$$x = 116\% = 1.16\,pu$$

(Equation 104)

formula 3.5can be re-written in the following way without changing the value for the operate time of the generator stator overload IED:

$$t_{op} = \frac{TD \cdot \frac{1}{x^2}}{\left(\frac{I_m}{x \cdot I_r}\right)^2 - \frac{1}{x^2}}$$

(Equation 105)

In order to achieve such protection functionality with one CVGAPC functions the following must be done:

1. Connect three-phase generator currents to one CVGAPC instance (for example, GF01)
2. Set parameter *CurrentInput* to value *PosSeq*
3. Set base current value to the rated generator current in primary amperes
4. Enable one overcurrent step (for example OC1)
5. Select parameter *CurveType_OC1* to value *Programmable*

$$t_{op} = TD \cdot \left(\frac{A}{M^P - C} + B \right)$$

(Equation 106)

where:

t_{op}	is the operating time in seconds of the Inverse Time Overcurrent TOC/IDMT algorithm
TD	is time multiplier (parameter setting)
M	is ratio between measured current magnitude and set pickup current level
A, B, C and P	are user settable coefficients which determine the curve used for Inverse Time Overcurrent TOC/IDMT calculation

When the equation 105 is compared with the equation 106 for the inverse time characteristic of the OC1 step in it is obvious that if the following rules are followed:

1. set TD equal to the IEC or ANSI standard generator capability value
2. set parameter *A_OC1* equal to the value 1/x2
3. set parameter *C_OC1* equal to the value 1/x2
4. set parameters *B_OC1* = 0.0 and *P_OC1*=2.0
5. set *PickupCurr_OC1* equal to the value x

then the OC1 step of the CVGAPC function can be used for generator negative sequence inverse overcurrent protection.

1. select positive sequence current as measuring quantity for this CVGAPC function
2. make sure that the base current value for CVGAPC function is equal to the generator rated current
3. set TD = 37.5 for the IEC standard or TD = 41.4 for the ANSI standard
4. set *A_OC1*= 1/1.162 = 0.7432
5. set *C_OC1*= 1/1.162 = 0.7432
6. set *B_OC1* = 0.0 and *P_OC1* = 2.0
7. set *PickupCurr_OC1* = 116%

Proper timing of CVGAPC function made in this way can easily be verified by secondary injection. All other settings can be left at the default values. If required delayed time reset for OC1 step can be set in order to insure proper function operation in case of repetitive overload conditions.

Furthermore the other built-in protection elements can be used for other protection and alarming purposes.

In the similar way rotor overload protection in accordance with ANSI standard can be achieved.

10.1.3.4 Open phase protection for transformer, lines or generators and circuit breaker head flashover protection for generators

Example will be given how to use one CVGAPC function to provide open phase protection. This can be achieved by using one CVGAPC function by comparing the unbalance current with a pre-set level. In order to make such a function more secure it is possible to restrain it by requiring that at the same time the measured unbalance current must be bigger than 97% of the maximum phase current. By doing this it will be insured that function can only pickup if one of the phases is open circuited. Such an arrangement is easy to obtain in CVGAPC function by enabling the current restraint feature. The following shall be done in order to insure proper operation of the function:

1. Connect three-phase currents from the protected object to one CVGAPC instance (for example, GF03)
2. Set *CurrentInput* to value *UnbalancePh*
3. Set *EnRestrainCurr* to *On*
4. Set *RestrCurrInput* to *MaxPh*
5. Set *RestrCurrCoeff* to value 0.97
6. Set base current value to the rated current of the protected object in primary amperes
7. Enable one overcurrent step (for example, OC1)
8. Select parameter *CurveType_OC1* to value *IEC Def. Time*
9. Set parameter *PickupCurr_OC1* to value 5%
10. Set parameter *tDef_OC1* to desired time delay (for example, 2.0s)

Proper operation of CVGAPC function made in this way can easily be verified by secondary injection. All other settings can be left at the default values. However it shall be noted that set values for restrain current and its coefficient will as well be applicable for OC2 step as soon as it is enabled.

Furthermore the other built-in protection elements can be used for other protection and alarming purposes. For example, in case of generator application by enabling OC2 step with set pickup to 200% and time delay to 0.1s simple but effective protection against circuit breaker head flashover protection is achieved.

10.1.3.5 Voltage restrained overcurrent protection for generator and step-up transformer

Example will be given how to use one CVGAPC function to provide voltage restrained overcurrent protection for a generator. Let us assume that the time coordination study gives the following required settings:

- Inverse Time Over Current TOC/IDMT curve: ANSI very inverse
- Pickup current of 185% of generator rated current at rated generator voltage
- Pickup current 25% of the original pickup current value for generator voltages below 25% of rated voltage

This functionality can be achieved by using one CVGAPC function. The following shall be done in order to insure proper operation of the function:

1. Connect three-phase generator currents and voltages to one CVGAPC instance (for example, GF05)
2. Set *CurrentInput* to value *MaxPh*
3. Set *VoltageInput* to value *MinPh-Ph* (it is assumed that minimum phase-to-phase voltage shall be used for restraining. Alternatively, positive sequence voltage can be used for restraining by selecting *PosSeq* for this setting parameter)
4. Set base current value to the rated generator current primary amperes
5. Set base voltage value to the rated generator phase-to-phase voltage in kV
6. Enable one overcurrent step (for example, OC1)
7. Select *CurveType_OC1* to value *ANSI Very inv*
8. If required set minimum operating time for this curve by using parameter *tMin_OC1* (default value 0.05s)
9. Set *PickupCurr_OC1* to value 185%
10. Set *VCntrlMode_OC1* to *On*
11. Set *VDepMode_OC1* to *Slope*
12. Set *VDepFact_OC1* to value 0.25
13. Set *VHighLimit_OC1* to value 100%
14. Set *VLowLimit_OC1* to value 25%

Proper operation of the CVGAPC function made in this way can easily be verified by secondary injection. All other settings can be left at the default values. Furthermore the other built-in protection elements can be used for other protection and alarming purposes.

10.1.3.6 Loss of excitation protection for a generator

Example will be given how by using positive sequence directional overcurrent protection element within a CVGAPC function, loss of excitation protection for a generator can be achieved. Let us assume that from rated generator data the following values are calculated:

- Maximum generator capability to contentiously absorb reactive power at zero active loading 38% of the generator MVA rating
- Generator pull-out angle 84 degrees

This functionality can be achieved by using one CVGAPC function. The following shall be done in order to insure proper operation of the function:

1. Connect three-phase generator currents and three-phase generator voltages to one CVGAPC instance (for example, GF02)
2. Set parameter *CurrentInput* to *PosSeq*
3. Set parameter *VoltageInput* to *PosSeq*
4. Set base current value to the rated generator current primary amperes
5. Set base voltage value to the rated generator phase-to-phase voltage in kV
6. Set parameter *RCADir* to value -84 degree (that is, current lead voltage for this angle)
7. Set parameter *ROADir* to value 90 degree
8. Set parameter *LowVolt_VM* to value 5%
9. Enable one overcurrent step (for example, OC1)
10. Select parameter *CurveType_OC1* to value *IEC Def. Time*
11. Set parameter *PickupCurr_OC1* to value 38%
12. Set parameter *tDef_OC1* to value 2.0s (typical setting)
13. Set parameter *DirMode_OC1* to *Forward*
14. Set parameter *DirPrinc_OC1* to *IcosPhi&V*
15. Set parameter *ActLowVolt1_VM* to *Block*

Proper operation of the CVGAPC function made in this way can easily be verified by secondary injection. All other settings can be left at the default values. However it shall be noted that set values for RCA & ROA angles will be applicable for OC2 step if directional feature is enabled for this step as well. Figure 84 shows overall protection characteristic

Furthermore the other build-in protection elements can be used for other protection and alarming purposes.

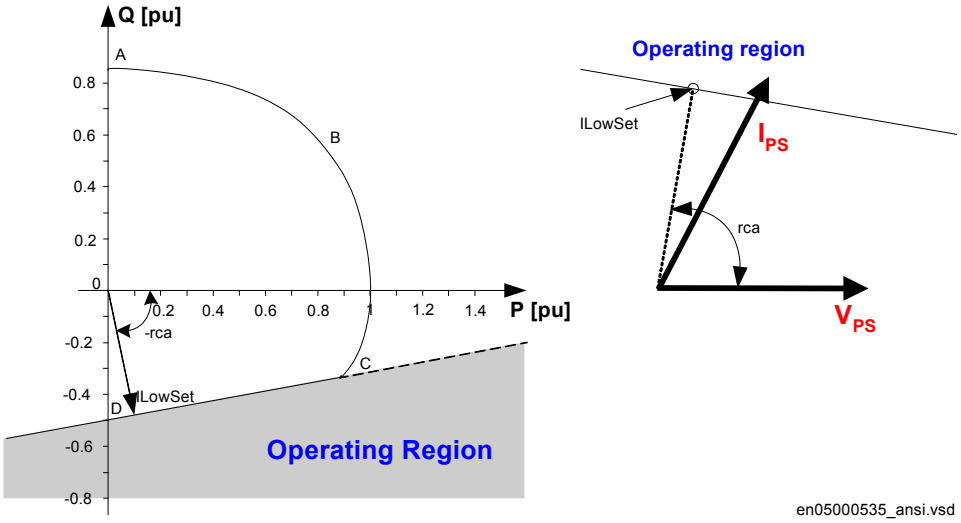

Figure 84: Loss of excitation

Section 11 System protection and control

11.1 Multipurpose filter SMAIHPAC

11.1.1 Identification

Function description	IEC 61850 identification	IEC 60617 identification	ANSI/IEEE C37.2 device number
Multipurpose filter	SMAIHPAC	-	-

11.1.2 Application

The multi-purpose filter, function block with name SMAI HPAC, is arranged as a three-phase filter. It has very much the same user interface (e.g. function block outputs) as the standard pre-processing function block SMAI. However the main difference is that it can be used to extract any frequency component from the input signal. For all four analogue input signals into this filter (i.e. three phases and the residual quantity) the input samples from the TRM module, which are coming at rate of 20 samples per fundamental system cycle, are first stored. When enough samples are available in the internal memory, the phasor values at set frequency defined by the setting parameter *SetFrequency* are calculated. The following values are internally available for each of the calculated phasors:

- Magnitude
- Phase angle
- Exact frequency of the extracted signal

The SMAI HPAC filter is always used in conjunction with some other protection function (e.g. multi-purpose protection function or overcurrent function or over-voltage function or over-power function). In this way many different protection applications can be arranged. For example the following protection, monitoring or measurement features can be realized:

- Sub-synchronous resonance protection for turbo generators
- Sub-synchronous protection for wind turbines/wind farms
- Detection of sub-synchronous oscillation between HVDC links and synchronous generators
- Super-synchronous protection
- Detection of presence of the geo-magnetic induced currents
- Overcurrent or overvoltage protection at specific frequency harmonic, sub-harmonic, inter-harmonic etc.
- Presence of special railway frequencies (e.g. 16.7Hz or 25Hz) in the three-phase power system
- Sensitive reverse power protection
- Stator or rotor earth fault protection for special injection frequencies (e.g. 25Hz)
- etc.

The filter output can also be connected to the measurement function blocks such as CVMMXN (Measurements), CMMXU (Phase current measurement), VMMXU (Phase-phase voltage measurement), etc. in order to report the extracted phasor values to the supervisory system (e.g. MicroSCADA).

The following figure shoes typical configuration connections required to utilize this filter in conjunction with multi-purpose function as non-directional overcurrent protection.

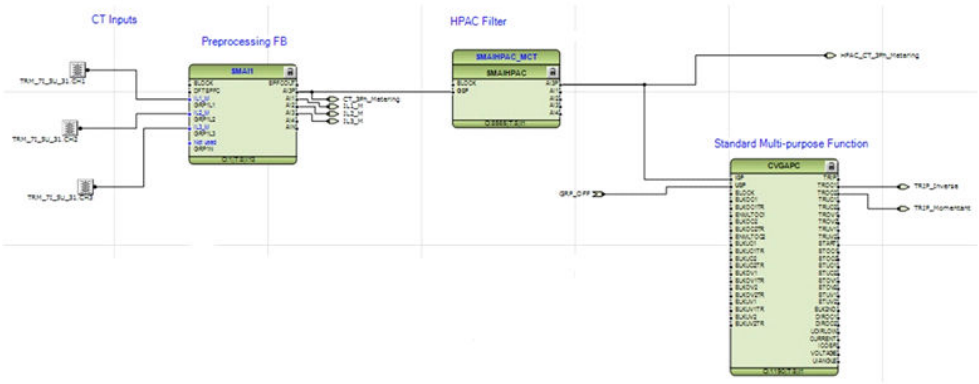

Figure 85: Required ACT configuration

Such overcurrent arrangement can be for example used to achieve the subsynchronous resonance protection for turbo generators.

11.1.3 Setting guidelines

11.1.3.1 Setting example

A relay type used for generator subsynchronous resonance overcurrent protection shall be replaced. The relay had inverse time operating characteristic as given with the following formula:

$$t_{op} = T_{01} + \frac{K}{I_s}$$

(Equation 107)

Where:

- t_{op} is the operating time of the relay
- T_{01} is fixed time delay (setting)
- K is a constant (setting)
- I_S is measured subsynchronous current in primary amperes

The existing relay was applied on a large 50Hz turbo generator which had shaft mechanical resonance frequency at 18.5Hz. The relay settings were T^{01} = 0.64 seconds, K= 35566 Amperes and minimal subsynchronous current trip level was set at I_{S0}=300 Amperes primary.

Solution with 670 series IED:

First the IED configuration shall be arranged as shown in Figure 85. Then the settings for SMAI HPAC filter and multipurpose function shall be derived from existing relay settings in the following way:

The subsynchronous current frequency is calculated as follows:

$$f_s = 50Hz - 18.5Hz = 31.5Hz$$

(Equation 108)

In order to properly extract the weak subsynchronous signal in presence of the dominating 50Hz signal the SMAI HPAC filter shall be set as given in the following table:

Table 23: Proposed settings for SMAIHPAC

I_HPAC_31_5Hz: SMAIHPAC:1	
ConnectionType	Ph — N
SetFrequency	31.5
FreqBandWidth	0.0
Table continues on next page	

FilterLength	1.0 s
OverLap	75
Operation	On

Now the settings for the multi-purpose overcurrent stage one shall be derived in order to emulate the existing relay operating characteristic. To achieve exactly the same inverse time characteristic the programmable IDMT characteristic is used which for multi-purpose overcurrent stage one, which has the following equation (for more information see Section “Inverse time characteristics” in the TRM).

$$t[s] = \left(\frac{A}{\left(\frac{i}{in>}\right)^{p} - C} + B \right) \cdot k$$

(Equation 109)

In order to adapt to the previous relay characteristic the above equation can be re-written in the following way:

$$t[s] = \left(\frac{\frac{K}{I_{so}}}{\left(\frac{I_s}{I_{so}}\right)^{1} - 0} + T_{01} \right) \cdot 1$$

(Equation 110)

Thus if the following rules are followed when multi-purpose overcurrent stage one is set:

- $in> = I_{S0} = 300A$
- $A = \frac{K}{I_{so}} = \frac{35566}{300} = 118.55$
- $B = T_{01} = 0.64$
- $C = 0.0$
- $p = 1.0$
- $k = 1.0$

then exact replica of the existing relay will be achieved. The following table summarizes all required settings for the multi-purpose function:

Setting Group1	
Operation	On
CurrentInput	MaxPh
IBase	1000
VoltageInput	MaxPh
UBase	20.50
OPerHarmRestr	Off
I_2ndI_fund	20.0
BlkLevel2nd	5000
EnRestrainCurr	Off
RestrCurrInput	PosSeq
RestrCurrCoeff	0.00
RCADir	-75
ROADir	75
LowVolt_VM	0.5

OC1	
Setting Group1	
Operation_OC1	On
StartCurr_OC1	30.0
CurrMult_OC1	2.0
CurveType_OC1	Programmable
tDef_OC1	0.00
k_OC1	1.00
tMin1	30
tMin_OC1	1.40
ResCrvType_OC1	Instantaneous
tResetDef_OC1	0.00
P_OC1	1.000
A_OC1	118.55
B_OC1	0.640
C_OC1	0.000

Section 12 Secondary system supervision

12.1 Current circuit supervision (87)

12.1.1 Identification

Function description	IEC 61850 identification	IEC 60617 identification	ANSI/IEEE C37.2 device number
Current circuit supervision	CCSSPVC	-	87

12.1.2 Application

Open or short circuited current transformer cores can cause unwanted operation of many protection functions such as differential, ground-fault current and negative-sequence current functions. When currents from two independent three-phase sets of CTs, or CT cores, measuring the same primary currents are available, reliable current circuit supervision can be arranged by comparing the currents from the two sets. If an error in any CT circuit is detected, the protection functions concerned can be blocked and an alarm given.

In case of large currents, unequal transient saturation of CT cores with different remanence or different saturation factor may result in differences in the secondary currents from the two CT sets. Unwanted blocking of protection functions during the transient stage must then be avoided.

Current circuit supervision CCSSPVC (87) must be sensitive and have short operate time in order to prevent unwanted tripping from fast-acting, sensitive numerical protections in case of faulty CT secondary circuits.

Open CT circuits creates extremely high voltages in the circuits which is extremely dangerous for the personnel. It can also damage the insulation and cause new problems.
The application shall, thus, be done with this in consideration, especially if the protection functions are blocked.

12.1.3 Setting guidelines

GlobalBaseSel: Selects the global base value group used by the function to define (*IBase*), (*VBase*) and (*SBase*).

Current circuit supervision CCSSPVC (87) compares the residual current from a three-phase set of current transformer cores with the neutral point current on a separate input taken from another set of cores on the same current transformer.

The minimum operate current, *IMinOp*, must be set as a minimum to twice the residual current in the supervised CT circuits under normal service conditions and rated primary current.

The parameter *Pickup_Block* is normally set at *150%* to block the function during transient conditions.

The FAIL output is connected to the blocking input of the protection function to be blocked at faulty CT secondary circuits.

12.2 Fuse failure supervision FUFSPVC

12.2.1 Identification

Function description	IEC 61850 identification	IEC 60617 identification	ANSI/IEEE C37.2 device number
Fuse failure supervision	FUFSPVC	-	-

12.2.2 Application

Different protection functions within the protection IED, operates on the basis of the measured voltage in the relay point. Examples are:

- impedance protection functions
- undervoltage function
- energizing check function and voltage check for the weak infeed logic

These functions can operate unintentionally if a fault occurs in the secondary circuits between the voltage instrument transformers and the IED.

It is possible to use different measures to prevent such unwanted operations. Miniature circuit breakers in the voltage measuring circuits should be located as close as possible to

the voltage instrument transformers, and shall be equipped with auxiliary contacts that are wired to the IEDs. Separate fuse-failure monitoring IEDs or elements within the protection and monitoring devices are another possibilities. These solutions are combined to get the best possible effect in the fuse failure supervision function (FUFSPVC).

FUFSPVC function built into the IED products can operate on the basis of external binary signals from the miniature circuit breaker or from the line disconnector. The first case influences the operation of all voltage-dependent functions while the second one does not affect the impedance measuring functions.

The negative sequence detection algorithm, based on the negative-sequence measuring quantities is recommended for use in isolated or high-impedance grounded networks: a high value of voltage $3V_2$ without the presence of the negative-sequence current $3I_2$ is a condition that is related to a fuse failure event.

The zero sequence detection algorithm, based on the zero sequence measuring quantities is recommended for use in directly or low impedance grounded networks: a high value of voltage $3V_0$ without the presence of the residual current $3I_0$ is a condition that is related to a fuse failure event. In cases where the line can have a weak-infeed of zero sequence current this function shall be avoided.

A criterion based on delta current and delta voltage measurements can be added to the fuse failure supervision function in order to detect a three phase fuse failure. This is beneficial for example during three phase transformer switching.

12.2.3 Setting guidelines

12.2.3.1 General

The negative and zero sequence voltages and currents always exist due to different non-symmetries in the primary system and differences in the current and voltage instrument transformers. The minimum value for the operation of the current and voltage measuring elements must always be set with a safety margin of 10 to 20%, depending on the system operating conditions.

Pay special attention to the dissymmetry of the measuring quantities when the function is used on long untransposed lines, on multicircuit lines and so on.

The settings of negative sequence, zero sequence and delta algorithm are in percent of the base voltage and base current for the function. Common base IED values for primary current (*IBase*), primary voltage (*VBase*) and primary power (*SBase*) are set in Global Base Values *GBASVAL*. The setting *GlobalBaseSel* is used to select a particular *GBASVAL* and used its base values.

12.2.3.2 Setting of common parameters

Set the operation mode selector *Operation* to *Enabled* to release the fuse failure function.

The voltage threshold *VPPU* is used to identify low voltage condition in the system. Set *VPPU* below the minimum operating voltage that might occur during emergency conditions. We propose a setting of approximately 70% of *VBase*.

The drop off time of 200 ms for dead phase detection makes it recommended to always set *SealIn* to *Enabled* since this will secure a fuse failure indication at persistent fuse fail when closing the local breaker when the line is already energized from the other end. When the remote breaker closes the voltage will return except in the phase that has a persistent fuse fail. Since the local breaker is open there is no current and the dead phase indication will persist in the phase with the blown fuse. When the local breaker closes the current will start to flow and the function detects the fuse failure situation. But due to the 200 ms drop off timer the output BLKZ will not be activated until after 200 ms. This means that distance functions are not blocked and due to the “no voltage but current” situation might issue a trip.

The operation mode selector *OpModeSel* has been introduced for better adaptation to system requirements. The mode selector enables selecting interactions between the negative sequence and zero sequence algorithm. In normal applications, the *OpModeSel* is set to either *V2I2* for selecting negative sequence algorithm or *V0I0* for zero sequence based algorithm. If system studies or field experiences shows that there is a risk that the fuse failure function will not be activated due to the system conditions, the dependability of the fuse failure function can be increased if the *OpModeSel* is set to *V0I0 OR V2I2* or *OptimZsNs*. In mode *V0I0 OR V2I2* both negative and zero sequence based algorithms are activated and working in an OR-condition. Also in mode *OptimZsNs* both negative and zero sequence algorithms are activated and the one that has the highest magnitude of measured negative or zero sequence current will operate. If there is a requirement to increase the security of the fuse failure function *OpModeSel* can be selected to *V0I0 AND V2I2* which gives that both negative and zero sequence algorithms are activated and working in an AND-condition, that is, both algorithms must give condition for block in order to activate the output signals BLKV or BLKZ.

12.2.3.3 Negative sequence based

The relay setting value *3V2PU* is given in percentage of the base voltage *VBase* and should not be set lower than the value that is calculated according to equation 111.

$$3V2PU = \frac{3V2}{VBase} \cdot 100$$

(Equation 111)

where:

3V2PU is the maximal negative sequence voltage during normal operation conditions, plus a margin of 10...20%

VBase is the base voltage for the function according to the setting *GlobalBaseSel*

The setting of the current limit *3I2PU* is in percentage of parameter *IBase*. The setting of *3I2PU* must be higher than the normal unbalance current that might exist in the system and can be calculated according to equation 112.

$$3I2PU = \frac{3I2}{IBase} \cdot 100$$

(Equation 112)

where:

3I2 is the maximal negative sequence current during normal operating conditions, plus a margin of 10...20%

IBase is the base current for the function according to the setting *GlobalBaseSel*

12.2.3.4 Zero sequence based

The IED setting value *3V0PU* is given in percentage of the base voltage *VBase*. The setting of *3V0PU* should not be set lower than the value that is calculated according to equation 113.

$$3V0PU = \frac{3V0}{VBase} \cdot 100$$

(Equation 113)

where:

3V0 is the maximal zero sequence voltage during normal operation conditions, plus a margin of 10...20%

VBase is the base voltage for the function according to the setting *GlobalBaseSel*

The setting of the current limit *3I0PU* is done in percentage of *IBase*. The setting of pickup must be higher than the normal unbalance current that might exist in the system. The setting can be calculated according to equation 114.

$$3I0PU = \frac{3I0}{IBase} \cdot 100$$

(Equation 114)

where:

3I0PU is the maximal zero sequence current during normal operating conditions, plus a margin of 10...20%

IBase is the base current for the function according to the setting *GlobalBaseSel*

12.2.3.5 Delta V and delta I

Set the operation mode selector *OpDVDI* to *Enabled* if the delta function shall be in operation.

The setting of *DVPU* should be set high (approximately 60% of *VBase*) and the current threshold *DIPU* low (approximately 10% of *IBase*) to avoid unwanted operation due to normal switching conditions in the network. The delta current and delta voltage function shall always be used together with either the negative or zero sequence algorithm. If $VSet_{prim}$ is the primary voltage for operation of dU/dt and $ISet_{prim}$ the primary current for operation of dI/dt, the setting of *DVPU* and *DIPU* will be given according to equation 115 and equation 116.

$$DVPU = \frac{VSet_{prim}}{VBase} \cdot 100$$

(Equation 115)

$$DIPU = \frac{ISet_{prim}}{IBase} \cdot 100$$

(Equation 116)

The voltage thresholds *VPPU* is used to identify low voltage condition in the system. Set *VPPU* below the minimum operating voltage that might occur during emergency conditions. A setting of approximately 70% of *VBase* is recommended.

The current threshold *50P* shall be set lower than the *IMinOp* for the distance protection function. A 5...10% lower value is recommended.

12.2.3.6 Dead line detection

The condition for operation of the dead line detection is set by the parameters *IDLDPU* for the current threshold and *UDLD*< for the voltage threshold.

Set the *IDLDPU* with a sufficient margin below the minimum expected load current. A safety margin of at least 15-20% is recommended. The operate value must however exceed the maximum charging current of an overhead line, when only one phase is disconnected (mutual coupling to the other phases).

Set the *VDLDPU* with a sufficient margin below the minimum expected operating voltage. A safety margin of at least 15% is recommended.

12.3 Fuse failure supervision VDSPVC (60)

12.3.1 Identification

Function description	IEC 61850 identification	IEC 60617 identification	ANSI/IEEE C37.2 device number
Fuse failure supervision	VDSPVC	VTS	60

12.3.2 Application

Some protection functions operate on the basis of measured voltage at the relay point. Examples of such protection functions are distance protection function, undervoltage function and energisation-check function. These functions might mal-operate if there is an incorrect measured voltage due to fuse failure or other kind of faults in voltage measurement circuit.

VDSPVC is designed to detect fuse failures or faults in voltage measurement circuit based on comparison of the voltages of the main and pilot fused circuits phase wise. VDSPVC output can be configured to block voltage dependent protection functions such as high-speed distance protection, undervoltage relays, underimpedance relays and so on.

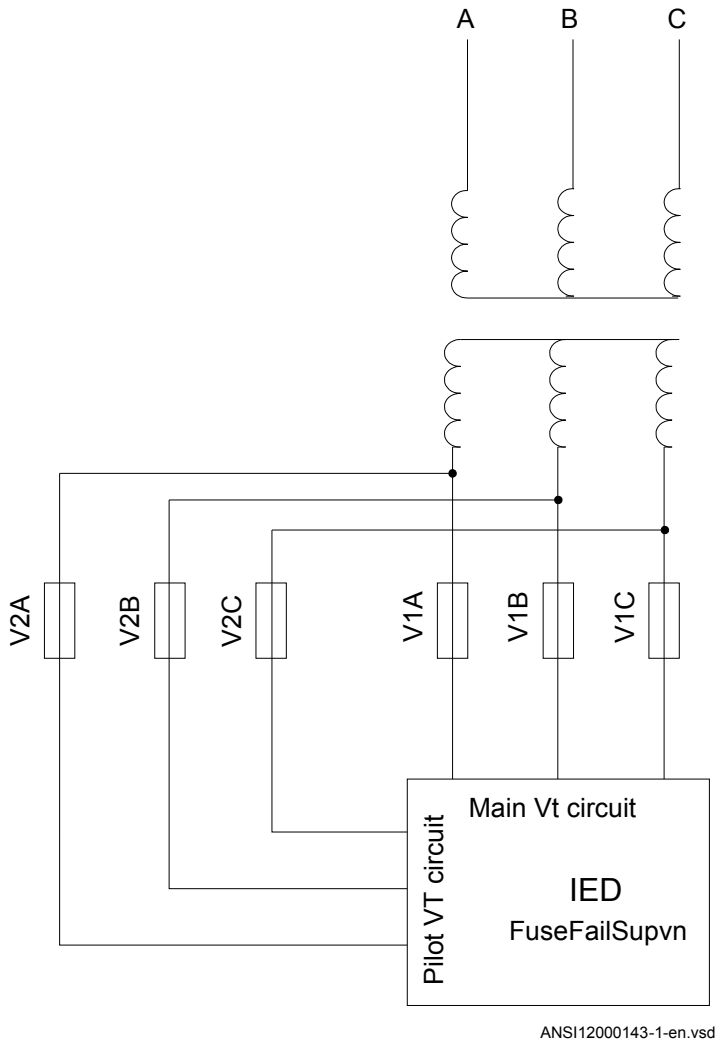

Figure 86: Application of VDSPVC

12.3.3 Setting guidelines

The parameters for Fuse failure supervision VDSPVC are set via the local HMI or PCM600.

The voltage input type (phase-to-phase or phase-to-neutral) is selected using *ConTypeMain* and *ConTypePilot* parameters, for main and pilot fuse groups respectively.

The connection type for the main and the pilot fuse groups must be consistent.

The settings *Vdif Main block*, *Vdif Pilot alarm* and *VSealIn* are in percentage of the base voltage, *VBase*. Set *VBase* to the primary rated phase-to-phase voltage of the potential voltage transformer. *VBase* is available in the Global Base Value groups; the particular Global Base Value group, that is used by VDSPVC (60), is set by the setting parameter *GlobalBaseSel*.

The settings *Vdif Main block* and *Vdif Pilot alarm* should be set low (approximately 30% of *VBase*) so that they are sensitive to the fault on the voltage measurement circuit, since the voltage on both sides are equal in the healthy condition. If $V_{SetPrim}$ is the desired pick up primary phase-to-phase voltage of measured fuse group, the setting of *Vdif Main block* and *Vdif Pilot alarm* will be given according to equation 117.

$$\text{Vdif Main block or Vdif Pilot alarm} = \frac{V_{SetPrim}}{V_{Base}} \cdot 100$$

(Equation 117)

$V_{SetPrim}$ is defined as phase to neutral or phase to phase voltage dependent of the selected *ConTypeMain* and *ConTypePilot*. If *ConTypeMain* and *ConTypePilot* are set to *Ph-N* than the function performs internally the rescaling of $V_{SetPrim}$.

When *SealIn* is set to *On* and the fuse failure has last for more than 5 seconds, the blocked protection functions will remain blocked until normal voltage conditions are restored above the *VSealIn* setting. The fuse failure outputs are deactivated when the normal voltage conditions are restored.

Section 13 Control

13.1 Synchronism check, energizing check, and synchronizing SESRSYN (25)

13.1.1 Identification

Function description	IEC 61850 identification	IEC 60617 identification	ANSI/IEEE C37.2 device number
Synchrocheck, energizing check, and synchronizing	SESRSYN	sc/vc	25

13.1.2 Application

13.1.2.1 Synchronizing

To allow closing of breakers between asynchronous networks a synchronizing function is provided. The breaker close command is issued at the optimum time when conditions across the breaker are satisfied in order to avoid stress on the network and its components.

The systems are defined to be asynchronous when the frequency difference between bus and line is larger than an adjustable parameter. If the frequency difference is less than this threshold value the system is defined to have a parallel circuit and the synchronism check function is used.

The synchronizing function measures the difference between the V-Line and the V-Bus. It operates and enables a closing command to the circuit breaker when the calculated closing angle is equal to the measured phase angle and the following conditions are simultaneously fulfilled:

- The voltages V-Line and V-Bus are higher than the set values for *VHighBusSynch* and *VHighLineSynch* of the base voltages *GblBaseSelBus* and *GblBaseSelLine*.
- The difference in the voltage is smaller than the set value of *VDiffSynch*.
- The difference in frequency is less than the set value of *FreqDiffMax* and larger than the set value of *FreqDiffMin*. If the frequency is less than *FreqDiffMin* the

synchronism check is used and the value of *FreqDiffMin* must thus be identical to the value *FreqDiffM* resp *FreqDiffA* for synchronism check function. The bus and line frequencies must also be within a range of +/- 5 Hz from the rated frequency. When the synchronizing option is included also for autoreclose there is no reason to have different frequency setting for the manual and automatic reclosing and the frequency difference values for synchronism check should be kept low.

- The frequency rate of change is less than set value for both V-Bus and V-Line.
- The closing angle is decided by the calculation of slip frequency and required pre-closing time.

The synchronizing function compensates for measured slip frequency as well as the circuit breaker closing delay. The phase angle advance is calculated continuously. Closing angle is the change in angle during the set breaker closing operate time *tBreaker*.

The reference voltage can be phase-neutral A, B, C or phase-phase A-B, B-C, C-A or positive sequence (Require a three phase voltage, that is VA, VB and VC) . By setting the phases used for SESRSYN, with the settings *SelPhaseBus1*, *SelPhaseBus2*, *SelPhaseLine2* and *SelPhaseLine2*, a compensation is made automatically for the voltage amplitude difference and the phase angle difference caused if different setting values are selected for the two sides of the breaker. If needed an additional phase angle adjustment can be done for selected line voltage with the *PhaseShift* setting.

13.1.2.2 Synchronism check

The main purpose of the synchronism check function is to provide control over the closing of circuit breakers in power networks in order to prevent closing if conditions for synchronism are not detected. It is also used to prevent the re-connection of two systems, which are divided after islanding and after a three pole reclosing.

Single pole auto-reclosing does not require any synchronism check since the system is tied together by two phases.

SESRSYN (25) function block includes both the synchronism check function and the energizing function to allow closing when one side of the breaker is dead. SESRSYN (25) function also includes a built in voltage selection scheme which allows adoption to various busbar arrangements.

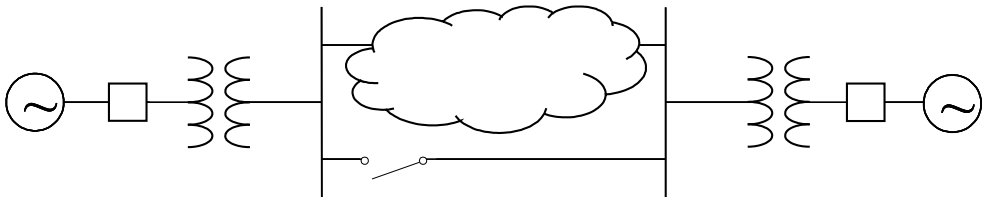

en04000179_ansi.vsd

Figure 87: Two interconnected power systems

Figure 87 shows two interconnected power systems. The cloud means that the interconnection can be further away, that is, a weak connection through other stations. The need for a check of synchronization increases if the meshed system decreases since the risk of the two networks being out of synchronization at manual or automatic closing is greater.

The synchronism check function measures the conditions across the circuit breaker and compares them to set limits. Output is generated only when all measured conditions are within their set limits simultaneously. The check consists of:

- Live line and live bus.
- Voltage level difference.
- Frequency difference (slip). The bus and line frequency must also be within a range of ±5 Hz from rated frequency.
- Phase angle difference.

A time delay is available to ensure that the conditions are fulfilled for a minimum period of time.

In very stable power systems the frequency difference is insignificant or zero for manually initiated closing or closing by automatic restoration. In steady conditions a bigger phase angle difference can be allowed as this is sometimes the case in a long and loaded parallel power line. For this application we accept a synchronism check with a long operation time and high sensitivity regarding the frequency difference. The phase angle difference setting can be set for steady state conditions.

Another example is the operation of a power network that is disturbed by a fault event: after the fault clearance a highspeed auto-reclosing takes place. This can cause a power swing in the net and the phase angle difference may begin to oscillate. Generally, the frequency difference is the time derivative of the phase angle difference and will, typically oscillate between positive and negative values. When the circuit breaker needs to be closed by auto-reclosing after fault-clearance some frequency difference should be tolerated, to a greater extent than in the steady condition mentioned in the case above. But if a big phase angle difference is allowed at the same time, there is some risk that auto-

reclosing will take place when the phase angle difference is big and increasing. In this case it should be safer to close when the phase angle difference is smaller.

To fulfill the above requirements the synchronism check function is provided with duplicate settings, one for steady (Manual) conditions and one for operation under disturbed conditions (Auto).

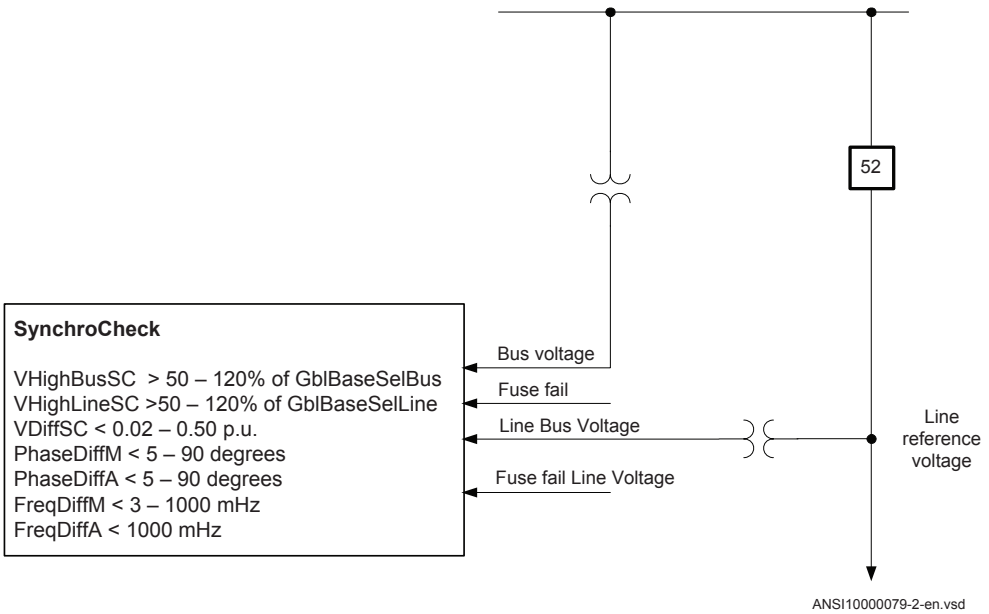

Figure 88: Principle for the synchronism check function

13.1.2.3 Energizing check

The main purpose of the energizing check function is to facilitate the controlled re-connection of disconnected lines and buses to energized lines and buses.

The energizing check function measures the bus and line voltages and compares them to both high and low threshold values. The output is given only when the actual measured conditions match the set conditions. Figure 89 shows two substations, where one (1) is energized and the other (2) is not energized. The line between CB A and CB B is energized (DLLB) from substation 1 via the circuit breaker A and energization of station 2 is done by CB B energization check device for that breaker DBLL. (or Both).

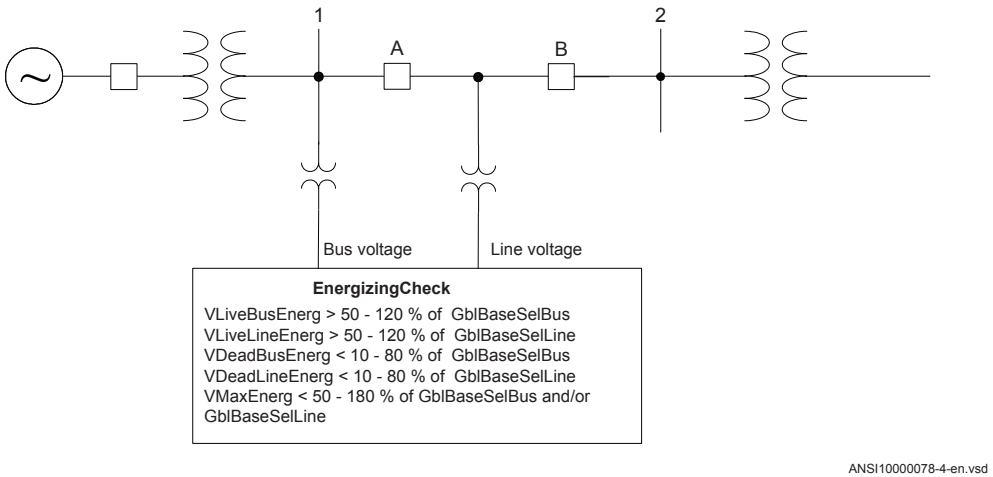

Figure 89: Principle for the energizing check function

The energizing operation can operate in the dead line live bus (DLLB) direction, dead bus live line (DBLL) direction, or in both directions over the circuit breaker. Energizing from different directions can be different for automatic reclosing and manual closing of the circuit breaker. For manual closing it is also possible to allow closing when both sides of the breaker are dead, Dead Bus Dead Line (DBDL).

The equipment is considered energized (Live) if the voltage is above the set value for *VLiveBusEnerg* or *VLiveLineEnerg* of the base voltages *GblBaseSelBus* and *VGblBaseSelLine*, which are defined in the Global Base Value groups, according to the setting of *GblBaseSelBus* and *GblBaseSelLine*; in a similar way, the equipment is considered non-energized (Dead) if the voltage is below the set value for *VDeadBusEnerg* or *VDeadLineEnerg* of the Global Base Value groups. A disconnected line can have a considerable potential due to factors such as induction from a line running in parallel, or feeding via extinguishing capacitors in the circuit breakers. This voltage can be as high as 50% or more of the base voltage of the line. Normally, for breakers with single breaking elements (<330 kV) the level is well below 30%.

When the energizing direction corresponds to the settings, the situation has to remain constant for a certain period of time before the close signal is permitted. The purpose of the delayed operate time is to ensure that the dead side remains de-energized and that the condition is not due to temporary interference.

13.1.2.4 Voltage selection

The voltage selection function is used for the connection of appropriate voltages to the synchronism check, synchronizing and energizing check functions. For example, when the IED is used in a double bus arrangement, the voltage that should be selected depends on the status of the breakers and/or disconnectors. By checking the status of the

disconnectors auxiliary contacts, the right voltages for the synchronism check and energizing check functions can be selected.

Available voltage selection types are for single circuit breaker with double busbars and the breaker-and-a-half arrangement. A double circuit breaker arrangement and single circuit breaker with a single busbar do not need any voltage selection function. Neither does a single circuit breaker with double busbars using external voltage selection need any internal voltage selection.

Manual energization of a completely open diameter in breaker-and-a-half switchgear is allowed by internal logic.

The voltages from busbars and lines must be physically connected to the voltage inputs in the IED and connected, using the PCM software, to each of the SESRSYN (25) functions available in the IED.

13.1.2.5 External fuse failure

Either external fuse-failure signals or signals from a tripped fuse (or miniature circuit breaker) are connected to HW binary inputs of the IED; these signals are connected to inputs of SESRSYN function in the application configuration tool of PCM600. The internal fuse failure supervision function can also be used if a three phase voltage is present. The signal BLKV, from the internal fuse failure supervision function, is then used and connected to the fuse supervision inputs of the SESRSYN function block. In case of a fuse failure, the SESRSYN energizing (25) function is blocked.

The VB1OK/VB2OK and VB1FF/VB2FF inputs are related to the busbar voltage and the VL1OK/VL2OK and VL1FF/VL2FF inputs are related to the line voltage.

External selection of energizing direction

The energizing can be selected by use of the available logic function blocks. Below is an example where the choice of mode is done from a symbol ,created in the Graphical Design Editor (GDE) tool on the local HMI, through selector switch function block, but alternatively there can for example, be a physical selector switch on the front of the panel which is connected to a binary to integer function block (B16I).

If the PSTO input is used, connected to the Local-Remote switch on the local HMI, the choice can also be from the station HMI system, typically ABB Microscada through IEC 61850–8–1 communication.

The connection example for selection of the manual energizing mode is shown in figure 90. Selected names are just examples but note that the symbol on the local HMI can only show the active position of the virtual selector.

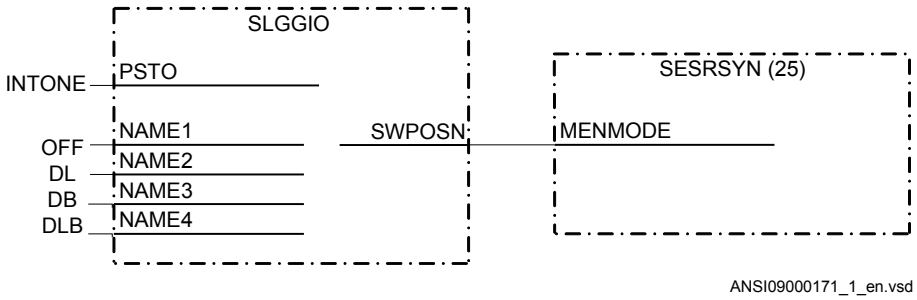

Figure 90: Selection of the energizing direction from a local HMI symbol through a selector switch function block.

13.1.3 Application examples

The synchronism check function block can also be used in some switchyard arrangements, but with different parameter settings. Below are some examples of how different arrangements are connected to the IED analog inputs and to the function block SESRSYN, 25. One function block is used per circuit breaker.

The input used below in example are typical and can be changed by use of configuration and signal matrix tools.

The SESRSYN and connected SMAI function block instances must have the same cycle time in the application configuration.

13.1.3.1 Single circuit breaker with single busbar

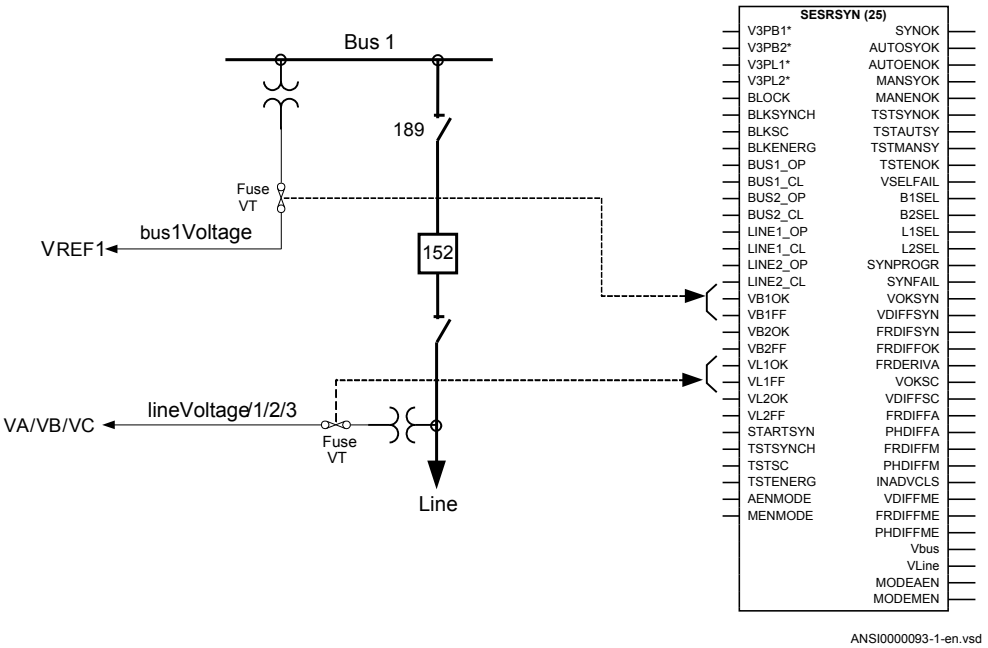

Figure 91: Connection of SESRSYN (25) function block in a single busbar arrangement

Figure 91 illustrates connection principles for a single busbar. For the SESRSYN (25) function there is one voltage transformer on each side of the circuit breaker. The voltage transformer circuit connections are straightforward; no special voltage selection is necessary.

The voltage from busbar VT is connected to V3PB1 and the voltage from the line VT is connected to V3PL1. The conditions of the VT fuses shall also be connected as shown above. The voltage selection parameter *CBConfig* is set to *No voltage sel*.

13.1.3.2 Single circuit breaker with double busbar, external voltage selection

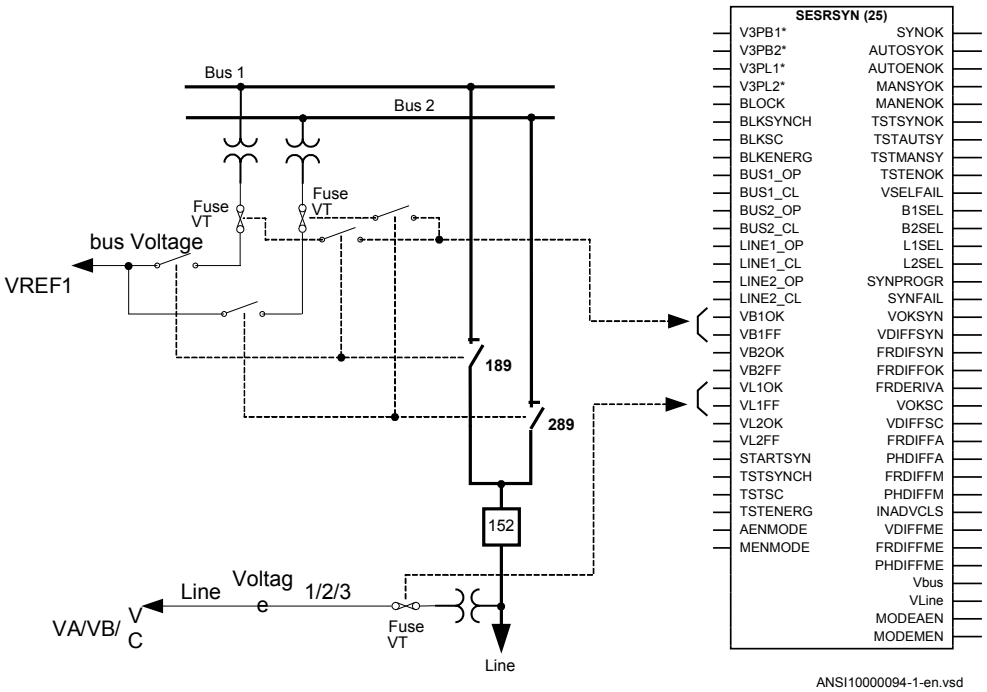

Figure 92: Connection of SESRSYN (25) function block in a single breaker, double busbar arrangement with external voltage selection

In this type of arrangement no internal voltage selection is required. The voltage selection is made by external relays typically connected according to figure 92. Suitable voltage and VT fuse failure supervision from the two busbars are selected based on the position of the busbar disconnectors. This means that the connections to the function block will be the same as for the single busbar arrangement. The voltage selection parameter *CBConfig* is set to *No voltage sel*.

13.1.3.3 Single circuit breaker with double busbar, internal voltage selection

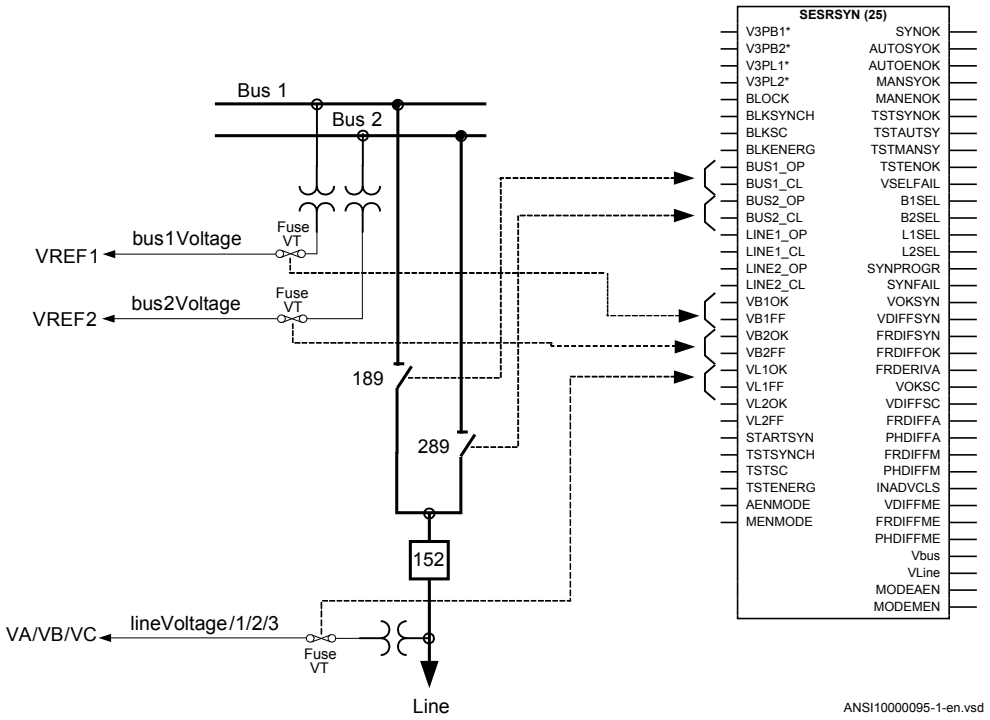

Figure 93: Connection of the SESRSYN function block in a single breaker, double busbar arrangement with internal voltage selection

When internal voltage selection is needed, the voltage transformer circuit connections are made according to figure 93. The voltage from the busbar 1 VT is connected to V3PB1 and the voltage from busbar 2 is connected to V3PB2. The voltage from the line VT is connected to V3PL1. The positions of the disconnectors and VT fuses shall be connected as shown in figure 93. The voltage selection parameter *CBConfig* is set to *Double bus*.

13.1.3.4 Double circuit breaker

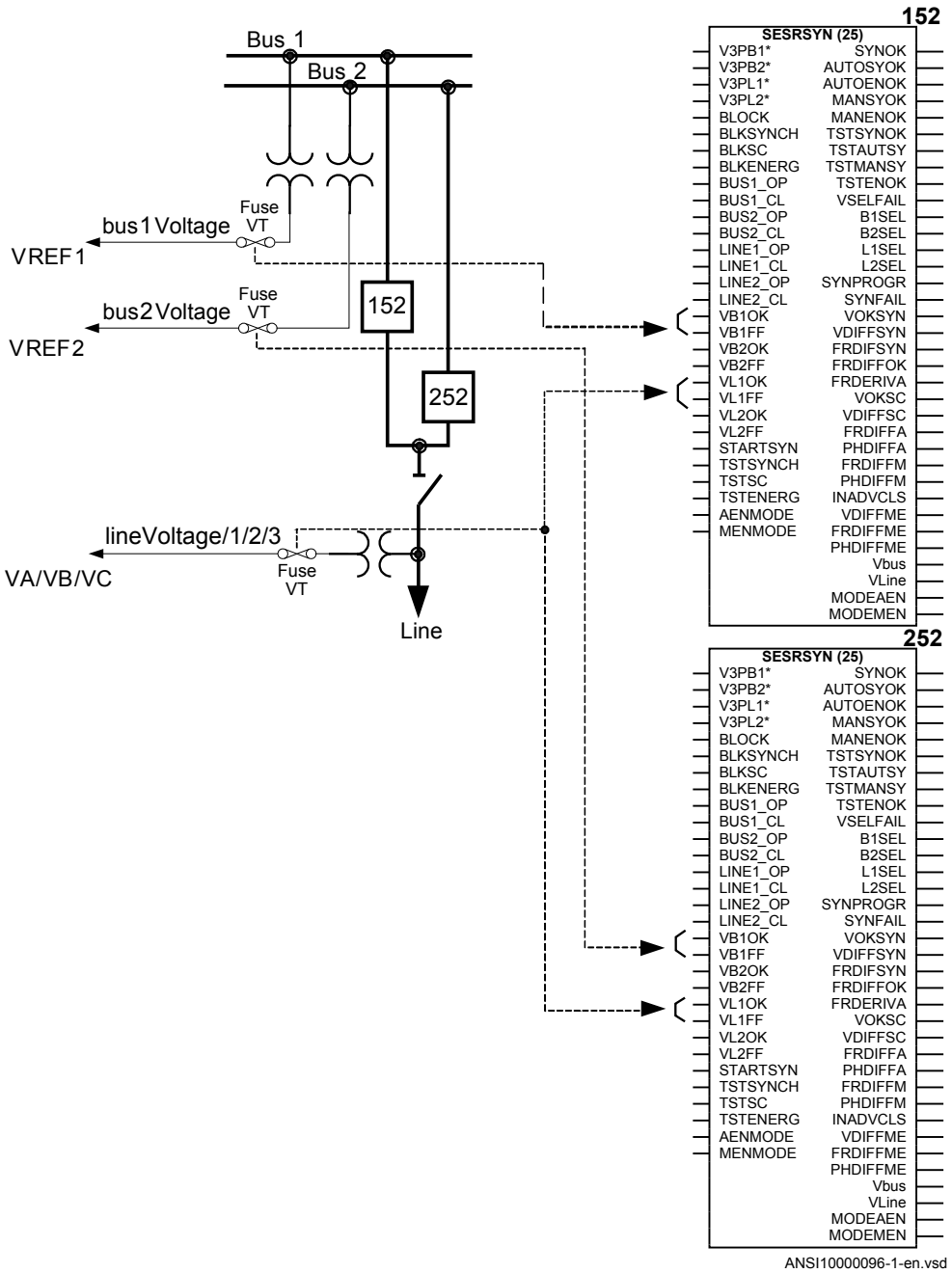

Figure 94: Connections of the SESRSYN (25) function block in a double breaker arrangement

A double breaker arrangement requires two function blocks, one for breaker WA1_QA1 and one for breaker WA2_QA1. No voltage selection is necessary, because the voltage from busbar 1 VT is connected to V3PB1 on SESRSYN for WA1_QA1 and the voltage from busbar 2 VT is connected toV3PB1 on SESRSYN for WA2_QA1. The voltage from the line VT is connected to V3PL1 on both function blocks. The condition of VT fuses shall also be connected as shown in figure 93. The voltage selection parameter *CBConfig* is set to *No voltage sel.* for both function blocks.

13.1.3.5 Breaker-and-a-half

Figure 95 describes a breaker-and-a-half arrangement with three SESRSYN functions in the same IED, each of them handling voltage selection for WA1_QA1, TIE_QA1 and WA2_QA1 breakers respectively. The voltage from busbar 1 VT is connected to V3PB1 on all three function blocks and the voltage from busbar 2 VT is connected to V3PB2 on all three function blocks. The voltage from line1 VT is connected to V3PL1 on all three function blocks and the voltage from line2 VT is connected to V3PL2 on all three function blocks. The positions of the disconnectors and VT fuses shall be connected as shown in Figure 95.

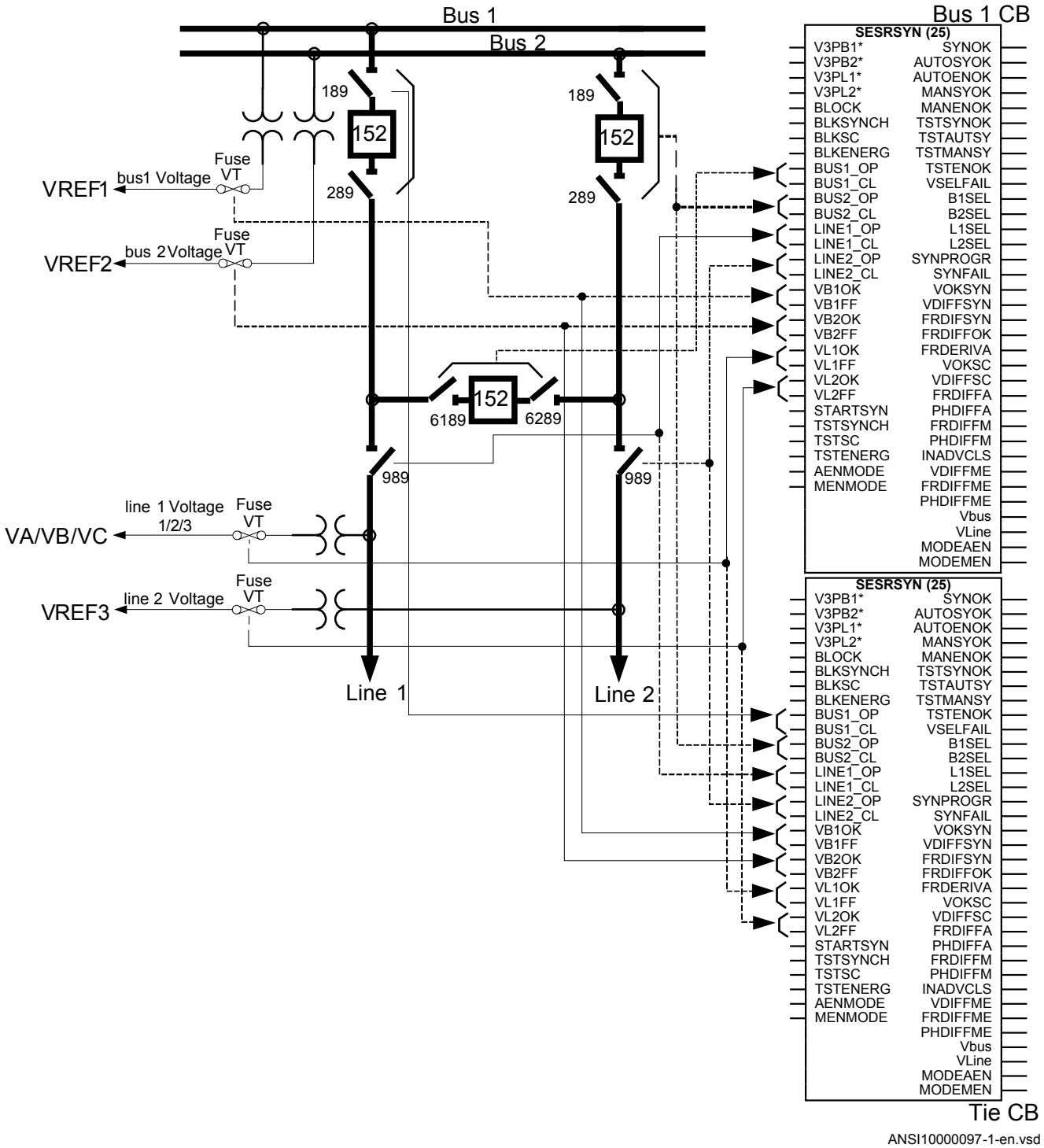

Figure 95: Connections of the SESRSYN (25) function block in a breaker-and-a-half arrangement with internal voltage selection

The connections are similar in all SESRSYN functions, apart from the breaker position indications. The physical analog connections of voltages and the connection to the IED and SESRSYN (25) function blocks must be carefully checked in PCM600. In all SESRSYN functions the connections and configurations must abide by the following rules: Normally apparatus position is connected with contacts showing both open (b-type) and closed positions (a-type).

WA1_QA1:

- BUS1_OP/CL = Position of TIE_QA1 breaker and belonging disconnectors
- BUS2_OP/CL = Position of WA2_QA1 breaker and belonging disconnectors
- LINE1_OP/CL = Position of LINE1_QB9 disconnector
- LINE2_OP/CL = Position of LINE2_QB9 disconnector
- VB1OK/FF = Supervision of WA1_MCB fuse
- VB2OK/FF = Supervision of WA2_MCB fuse
- VL1OK/FF = Supervision of LINE1_MCB fuse
- VL2OK/FF = Supervision of LINE2_MCB fuse
- Setting *CBConfig = 1 1/2 bus CB*

TIE_QA1:

- BUS1_OP/CL = Position of WA1_QA1 breaker and belonging disconnectors
- BUS2_OP/CL = Position of WA2_QA1 breaker and belonging disconnectors
- LINE1_OP/CL = Position of LINE1_QB9 disconnector
- LINE2_OP/CL = Position of LINE2_QB9 disconnector
- VB1OK/FF = Supervision of WA1_MCB fuse
- VB2OK/FF = Supervision of WA2_MCB fuse
- VL1OK/FF = Supervision of LINE1_MCB fuse
- VL2OK/FF = Supervision of LINE2_MCB fuse
- Setting *CBConfig = Tie CB*

WA2_QA1:

- BUS1_OP/CL = Position of WA1_QA1 breaker and belonging disconnectors
- BUS2_OP/CL = Position of TIE_QA1 breaker and belonging disconnectors
- LINE1_OP/CL = Position of LINE1_QB9 disconnector
- LINE2_OP/CL = Position of LINE2_QB9 disconnector
- VB1OK/FF = Supervision of WA1_MCB fuse
- VB2OK/FF = Supervision of WA2_MCB fuse
- VL1OK/FF = Supervision of LINE1_MCB fuse
- VL2OK/FF = Supervision of LINE2_MCB fuse
- Setting *CBConfig = 1 1/2 bus alt. CB*

If only two SESRSYN functions are provided in the same IED, the connections and settings are according to the SESRSYN functions for WA1_QA1 and TIE_QA1.

13.1.4 Setting guidelines

The setting parameters for the Synchronizing, synchronism check and energizing check function SESRSYN (25) are set via the local HMI (LHMI) or PCM600.

This setting guidelines describes the settings of the SESRSYN (25) function via the LHMI.

Common base IED value for primary voltage (*VBase*) is set in a Global base value function, GBASVAL, found under **Main menu//Configuration/Power system/ GlobalBaseValue/GBASVAL_X/VBase**. The SESRSYN (25) function has one setting for the bus reference voltage (*GblBaseSelBus*) and one setting for the line reference voltage (*GblBaseSelLine*) which independently of each other can be set to select one of the twelve GBASVAL functions used for reference of base values. This means that the reference voltage of bus and line can be set to different values. The settings for the SESRSYN (25) function are found under **Main menu/Settings/IED Settings/Control/ Synchronizing(25,SC/VC)/SESRSYN(25,SC/VC):X** has been divided into four different setting groups: General, Synchronizing, Synchrocheck and Energizingcheck.

General settings

Operation: The operation mode can be set *Enabled* or *Disabled*. The setting *Disabled* disables the whole function.

GblBaseSelBus and *GblBaseSelLine*

These configuration settings are used for selecting one of twelve GBASVAL functions, which then is used as base value reference voltage, for bus and line respectively.

SelPhaseBus1 and *SelPhaseBus2*

Configuration parameters for selecting the measuring phase of the voltage for busbar 1 and 2 respectively, which can be a single-phase (phase-neutral), two-phase (phase-phase) or a positive sequence voltage.

SelPhaseLine1 and *SelPhaseLine2*

Configuration parameters for selecting the measuring phase of the voltage for line 1 and 2 respectively, which can be a single-phase (phase-neutral), two-phase (phase-phase) or a positive sequence voltage.

CBConfig

This configuration setting is used to define type of voltage selection. Type of voltage selection can be selected as:

- no voltage selection, *No voltage sel.*
- single circuit breaker with double bus, *Double bus*
- breaker-and-a-half arrangement with the breaker connected to busbar 1, *1 1/2 bus CB*
- breaker-and-a-half arrangement with the breaker connected to busbar 2, *1 1/2 bus alt. CB*
- breaker-and-a-half arrangement with the breaker connected to line 1 and 2, *Tie CB*

PhaseShift

This setting is used to compensate for a phase shift caused by a power transformer between the two measurement points for bus voltage and line voltage. The set value is added to the measured line phase angle. The bus voltage is reference voltage.

Synchronizing settings

OperationSynch

The setting *Off* disables the Synchronizing function. With the setting *On*, the function is in the service mode and the output signal depends on the input conditions.

VHighBusSynch and *VHighLineSynch*

The voltage level settings shall be chosen in relation to the bus/line network voltage. The threshold voltages *VHighBusSynch* and *VHighLineSynch* have to be set lower than the value where the network is expected to be synchronized. A typical value is 80% of the rated voltage.

VDiffSynch

Setting of the voltage difference between the line voltage and the bus voltage. The difference is set depending on the network configuration and expected voltages in the two networks running asynchronously. A normal setting is 0.10-0.15 p.u.

FreqDiffMin

The setting *FreqDiffMin* is the minimum frequency difference where the systems are defined to be asynchronous. For frequency differences lower than this value, the systems are considered to be in parallel. A typical value for *FreqDiffMin* is 10 mHz. Generally, the value should be low if both synchronizing and synchrocheck functions are provided, and it is better to let the synchronizing function close, as it will close at exactly the right instance if the networks run with a frequency difference.

To avoid overlapping of the synchronizing function and the synchrocheck function the setting *FreqDiffMin* must be set to a higher value than used setting *FreqDiffM*, respective *FreqDiffA* used for synchrocheck.

FreqDiffMax

The setting *FreqDiffMax* is the maximum slip frequency at which synchronizing is accepted. 1/*FreqDiffMax* shows the time for the vector to move 360 degrees, one turn on the synchronoscope, and is called Beat time. A typical value for *FreqDiffMax* is 200-250 mHz, which gives beat times on 4-5 seconds. Higher values should be avoided as the two networks normally are regulated to nominal frequency independent of each other, so the frequency difference shall be small.

FreqRateChange

The maximum allowed rate of change for the frequency.

tBreaker

The *tBreaker* shall be set to match the closing time for the circuit breaker and should also include the possible auxiliary relays in the closing circuit. It is important to check that no slow logic components are used in the configuration of the IED as there then can be big variations in closing time due to those components. Typical setting is 80-150 ms depending on the breaker closing time.

tClosePulse

The setting for the duration of the breaker close pulse.

tMaxSynch

The setting *tMaxSynch* is set to reset the operation of the synchronizing function if the operation does not take place within this time. The setting must allow for the setting of *FreqDiffMin*, which will decide how long it will take maximum to reach phase equality. At the setting of 10 mHz, the beat time is 100 seconds and the setting would thus need to be at least *tMinSynch* plus 100 seconds. If the network frequencies are expected to be outside the limits from the start, a margin needs to be added. A typical setting is 600 seconds.

tMinSynch

The setting *tMinSynch* is set to limit the minimum time at which the synchronizing closing attempt is given. The synchronizing function will not give a closing command within this time, from when the synchronizing is started, even if a synchronizing condition is fulfilled. A typical setting is 200 ms.

Synchrocheck settings

OperationSC

The *OperationSC* setting *Off* disables the synchrocheck function and sets the outputs AUTOSYOK, MANSYOK, TSTAUTSY and TSTMANSY to low. With the setting *On*, the function is in the service mode and the output signal depends on the input conditions.

VHighBusSC and *VHighLineSC*

The voltage level settings must be chosen in relation to the bus or line network voltage. The threshold voltages *VHighBusSC* and *VHighLineSC* have to be set lower than the value at which the breaker is expected to close with the synchronism check. A typical value can be 80% of the base voltages.

VDiffSC

The setting for voltage difference between line and bus in p.u. This setting in p.u. is defined as (V-Bus/*GblBaseSelBus*) - (V-Line/*GblBaseSelLine*). A normal setting is 0,10-0,15 p.u.

FreqDiffM and *FreqDiffA*

The frequency difference level settings, *FreqDiffM* and *FreqDiffA*, shall be chosen depending on the condition in the network. At steady conditions a low frequency difference setting is needed, where the *FreqDiffM* setting is used. For autoreclosing a bigger frequency difference setting is preferable, where the *FreqDiffA* setting is used. A typical value for *FreqDiffM* can be10 mHz, and a typical value for *FreqDiffA* can be 100-200 mHz.

PhaseDiffM and *PhaseDiffA*

The phase angle difference level settings, *PhaseDiffM* and *PhaseDiffA*, shall also be chosen depending on conditions in the network. The phase angle setting must be chosen to allow closing under maximum load condition. A typical maximum value in heavy-loaded networks can be 45 degrees, whereas in most networks the maximum occurring angle is below 25 degrees. The *PhaseDiffM* setting is a limitation to *PhaseDiffA* setting. Fluctuations occurring at high speed autoreclosing limit *PhaseDiffA* setting.

tSCM and *tSCA*

The purpose of the timer delay settings, *tSCM* and *tSCA*, is to ensure that the synchrocheck conditions remains constant and that the situation is not due to a temporary interference. Should the conditions not persist for the specified time, the delay timer is reset and the procedure is restarted when the conditions are fulfilled again. Circuit breaker closing is thus not permitted until the synchrocheck situation has remained constant throughout the set delay setting time. Manual closing is normally under more stable conditions and a longer operation time delay setting is needed, where the *tSCM* setting is used. During auto-reclosing, a shorter operation time delay setting is preferable, where the *tSCA* setting is used. A typical value for *tSCM* can be 1 second and a typical value for *tSCA* can be 0.1 seconds.

Energizingcheck settings

AutoEnerg and *ManEnerg*

Two different settings can be used for automatic and manual closing of the circuit breaker. The settings for each of them are:

- *Disabled*, the energizing function is disabled.
- *DLLB*, Dead Line Live Bus, the line voltage is below set value of *VDeadLineEnerg* and the bus voltage is above set value of *VLIveBusEnerg*.
- *DBLL*, Dead Bus Live Line, the bus voltage is below set value of *VDeadBusEnerg* and the line voltage is above set value of *VLiveLineEnerg*.
- *Both*, energizing can be done in both directions, *DLLB* or *DBLL*.

ManEnergDBDL

If the parameter is set to *Enabled*, manual closing is also enabled when both line voltage and bus voltage are below *VDeadLineEnerg* and *VDeadBusEnerg* respectively, and *ManEnerg* is set to *DLLB*, *DBLL* or *Both*.

VLiveBusEnerg and *VLiveLineEnerg*

The voltage level settings must be chosen in relation to the bus or line network voltage. The threshold voltages *VLiveBusEnerg* and *VLiveLineEnerg* have to be set lower than the value at which the network is considered to be energized. A typical value can be 80% of the base voltages.

VDeadBusEnerg and *VDeadLineEnerg*

The threshold voltages *VDeadBusEnerg* and *VDeadLineEnerg*, have to be set to a value greater than the value where the network is considered not to be energized. A typical value can be 40% of the base voltages.

A disconnected line can have a considerable potential due to, for instance, induction from a line running in parallel, or by being fed via the extinguishing capacitors in the circuit breakers. This voltage can be as high as 30% or more of the base line voltage.

Because the setting ranges of the threshold voltages *VLiveBusEnerg*/*VLiveLineEnerg* and *VDeadBusEnerg*/*VDeadLineEnerg* partly overlap each other, the setting conditions may be such that the setting of the non-energized threshold value is higher than that of the energized threshold value. The parameters must therefore be set carefully to avoid overlapping.

VMaxEnerg

This setting is used to block the closing when the voltage on the live side is above the set value of *VMaxEnerg*.

tAutoEnerg and *tManEnerg*

The purpose of the timer delay settings, *tAutoEnerg* and *tManEnerg*, is to ensure that the dead side remains de-energized and that the condition is not due to a temporary interference. Should the conditions not persist for the specified time, the delay timer is reset and the procedure is restarted when the conditions are fulfilled again. Circuit breaker closing is thus not permitted until the energizing condition has remained constant throughout the set delay setting time.

13.2 Autorecloser for 1 phase, 2 phase and/or 3 phase operation SMBRREC (79)

13.2.1 Identification

Function Description	IEC 61850 identification	IEC 60617 identification	ANSI/IEEE C37.2 device number
Autorecloser for 1 phase, 2 phase and/or 3 phase	SMBRREC	O->I	79

13.2.2 Application

Automatic reclosing is a well-established method for the restoration of service in a power system after a transient line fault. The majority of line faults are flashover arcs, which are transient by nature. When the power line is switched off by the operation of line protection and line breakers, the arc de-ionizes and recovers its ability to withstand voltage at a somewhat variable rate. Thus, a certain dead time with a de-energized line is necessary. Line service can then be resumed by automatic reclosing of the line breakers. The dead time selected should be long enough to ensure a high probability of arc de-ionization and successful reclosing.

For individual line breakers, auto-reclosing equipment, the auto-reclosing open time is used to determine line “dead time”. When simultaneous tripping and reclosing at the two line ends occurs, auto-reclosing open time is approximately equal to the line “dead time”. If the open time and dead time differ then, the line will be energized until the breakers at both ends have opened.

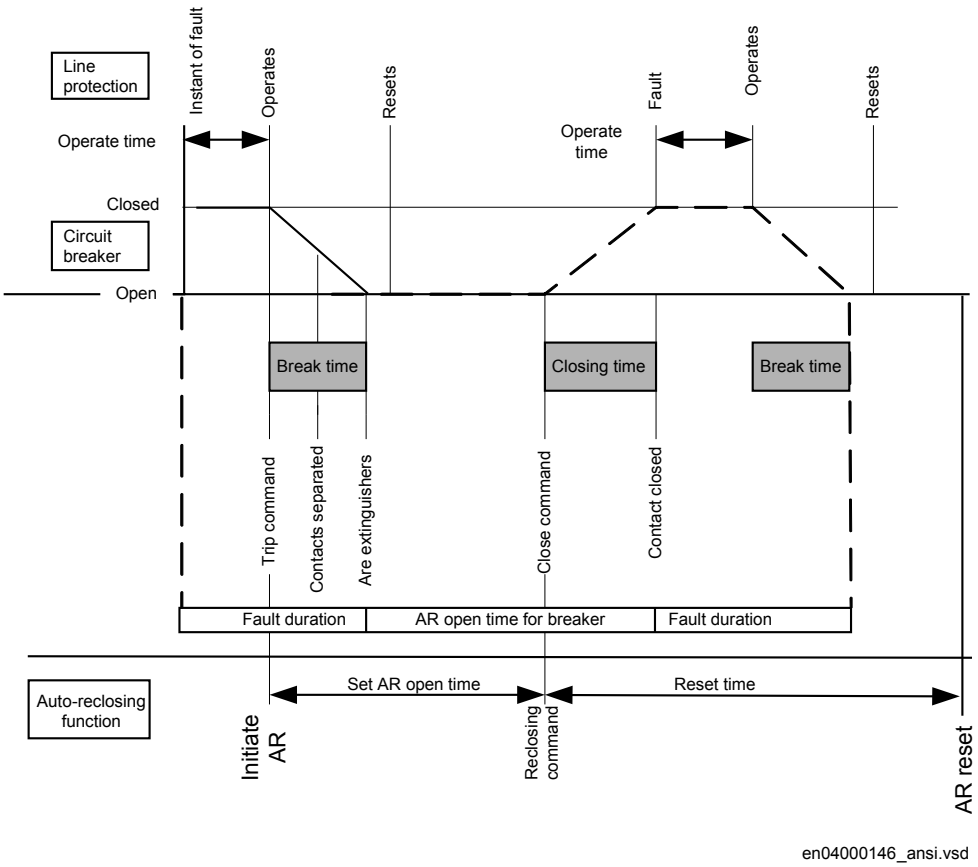

Figure 96: Single-shot automatic reclosing at a permanent fault

Single-pole tripping and single-phase automatic reclosing is a way of limiting the effect of a single-phase line fault on power system operation. Especially at higher voltage levels, the majority of faults are of single-phase type (around 90%). To maintain system stability in power systems with limited meshing or parallel routing single phase auto reclosing is of particular value. During the single phase dead time the system is still capable of transmitting load on the two healthy phases and the system is still synchronized. It requires that each phase breaker operates individually, which is usually the case for higher transmission voltages.

A somewhat longer dead time may be required for single-phase reclosing compared to high-speed three-phase reclosing. This is due to the influence on the fault arc from the voltage and the current in the non-tripped phases.

To maximize the availability of the power system it is possible to choose single pole tripping and automatic reclosing during single-phase faults and three pole tripping and automatic reclosing during multi-phase faults. Three-phase automatic reclosing can be

performed with or without the use of a synchronism check, and an energizing check, such as dead line or dead busbar check.

During the single-pole open time there is an equivalent "series"-fault in the system resulting in a flow of zero sequence current. It is therefore necessary to coordinate the residual current protections (ground fault protection) with the single pole tripping and the auto-reclosing function. Attention shall also be paid to “pole discrepancy” that arises when circuit breakers are provided with single pole operating devices. These breakers need pole discrepancy protection. They must also be coordinated with the single pole auto-recloser and blocked during the dead time when a normal discrepancy occurs. Alternatively, they should use a trip time longer than the set single phase dead time.

For the individual line breakers and auto-reclosing equipment, the ”auto-reclosing open time” expression is used. This is the dead time setting for the Auto-Recloser. During simultaneous tripping and reclosing at the two line ends, auto-reclosing open time is approximately equal to the line dead time. Otherwise these two times may differ as one line end might have a slower trip than the other end which means that the line will not be dead until both ends have opened.

If the fault is permanent, the line protection will trip again when reclosing is attempted in order to clear the fault.

It is common to use one automatic reclosing function per line circuit-breaker (CB). When one CB per line end is used, then there is one auto-reclosing function per line end. If auto-reclosing functions are included in duplicated line protection, which means two auto-reclosing functions per CB, one should take measures to avoid uncoordinated reclosing commands. In breaker-and-a-half, double-breaker and ring bus arrangements, two CBs per line end are operated. One auto-reclosing function per CB is recommended. Arranged in such a way, sequential reclosing of the two CBs can be arranged with a priority circuit available in the auto-reclose function. In case of a permanent fault and unsuccessful reclosing of the first CB, reclosing of the second CB is cancelled and thus the stress on the power system is limited. Another advantage with the breaker connected auto-recloser is that checking that the breaker closed before the sequence, breaker prepared for an auto-reclose sequence and so on. is much simpler.

The auto-reclosing function can be selected to perform single-phase and/or three-phase automatic-reclosing from several single-shot to multiple-shot reclosing programs. The three-phase auto-reclosing open time can be set to give either High-Speed Automatic Reclosing (HSAR) or Delayed Automatic-Reclosing (DAR). These expressions, HSAR and DAR, are mostly used for three-phase Reclosing as single phase is always high speed to avoid maintaining the unsymmetrical condition. HSAR usually means a dead time of less than 1 second.

In power transmission systems it is common practise to apply single and/or three phase, single-shot Auto-Reclosing. In Sub-transmission and Distribution systems tripping and auto-reclosing are usually three-phase. The mode of automatic-reclosing varies however.

Single-shot and multi-shot are in use. The first shot can have a short delay, HSAR, or a longer delay, DAR. The second and following reclosing shots have a rather long delay. When multiple shots are used the dead time must harmonize with the breaker duty-cycle capacity.

Automatic-reclosing is usually started by the line protection and in particular by instantaneous tripping of such protection. The auto-reclosing function can be inhibited (blocked) when certain protection functions detecting permanent faults, such as shunt reactor, cable or busbar protection are in operation. Back-up protection zones indicating faults outside the own line are also connected to inhibit the Auto-Reclose.

Automatic-reclosing should not be attempted when closing a CB and energizing a line onto a fault (SOTF), except when multiple-shots are used where shots 2 etc. will be started at SOTF. Likewise a CB in a multi-breaker busbar arrangement which was not closed when a fault occurred should not be closed by operation of the Auto-Reclosing function. Auto-Reclosing is often combined with a release condition from synchronism check and dead line or dead busbar check. In order to limit the stress on turbo-generator sets from Auto-Reclosing onto a permanent fault, one can arrange to combine Auto-Reclosing with a synchronism check on line terminals close to such power stations and attempt energizing from the side furthest away from the power station and perform the synchronism check at the local end if the energizing was successful.

Transmission protection systems are usually sub-divided and provided with two redundant protection IEDs. In such systems it is common to provide auto-reclosing in only one of the sub-systems as the requirement is for fault clearance and a failure to reclose because of the auto-recloser being out of service is not considered a major disturbance. If two auto-reclosers are provided on the same breaker, the application must be carefully checked and normally one must be the master and be connected to inhibit the other auto-recloser if it has started. This inhibit can for example be done from Autorecloser for 3-phase operation(SMBRREC ,79) In progress.

When Single and/or three phase auto-reclosing is considered, there are a number of cases where the tripping shall be three phase anyway. For example:

- Evolving fault where the fault during the dead-time spreads to another phase. The other two phases must then be tripped and a three phase dead-time and auto-reclose initiated
- Permanent fault
- Fault during three phase dead-time
- Auto-reclose out of service or CB not ready for an auto-reclosing cycle

“Prepare three-pole tripping” is then used to switch the tripping to three-pole. This signal is generated by the auto-recloser and connected to the trip function block and also connected outside the IED through IO when a common auto-recloser is provided for two sub-systems. An alternative signal “Prepare 1 Pole tripping” is also provided and can be

used as an alternative when the autorecloser is shared with another subsystem. This provides a fail safe connection so that even a failure in the IED with the auto-recloser will mean that the other sub-system will start a three-pole trip.

A permanent fault will cause the line protection to trip again when it recloses in an attempt to energize the line.

The auto-reclosing function allows a number of parameters to be adjusted.

Examples:

- number of auto-reclosing shots
- auto-reclosing program
- auto-reclosing open times (dead time) for each shot

13.2.2.1 Auto-reclosing operation OFF and ON

Operation of the automatic reclosing can be set OFF and ON by a setting parameter and by external control. Parameter *Operation= Disabled*, or *Enabled* sets the function OFF and ON. With the settings *Operation = Enabled* and *ExternalCtrl = Enabled* , the control is made by input signal pulses to the inputs ON and OFF, for example, from the control system or from the binary input (and other systems).

When the function is set ON, the output SETON is set, and it become operative if other conditions such as CB closed and CB Ready are also fulfilled, the output READY is activated (high). When the function is ready to accept a reclosing start.

13.2.2.2 Initiate auto-reclosing and conditions for initiation of a reclosing cycle

The usual way to start a reclosing cycle, or sequence, is to start it at selective tripping by line protection by applying a signal to the input RI. Starting signals can be either, General Trip signals or, only the conditions for Differential, Distance protection Zone 1 and Distance protection Aided trip. In some cases also Directional Ground fault function Aided trip can be connected to start an Auto-Reclose attempt. If general trip is used to start the auto- recloser it is important to block it from other functions that should not start a reclosing sequence.

In cases where one wants to differentiate three-phase “auto-reclosing open time”, (“dead time”) for different power system configuration or at tripping by different protection stages, one can also use the input RI_HS (Initiate High-Speed Reclosing). When initiating RI_HS, the auto-reclosing open time for three-phase shot 1, *t1 3PhHS* is used and the closing is done without checking the synchrocheck condition.

A number of conditions need to be fulfilled for the start to be accepted and a new auto-reclosing cycle to be started. They are linked to dedicated inputs. The inputs are:

- CBREADY, CB ready for a reclosing cycle, for example, charged operating gear.
- 52a to ensure that the CB was closed when the line fault occurred and start was applied.
- No signal at input INHIBIT that is, no blocking or inhibit signal present. After the start has been accepted, it is latched in and an internal signal “Started” is set. It can be interrupted by certain events, like an “Inhibit” signal.

13.2.2.3 Initiate auto-reclosing from CB open information

If a user wants to initiate auto-reclosing from the "CB open" position instead of from protection trip signals, the function offers such a possibility. This starting mode is selected with the setting parameter *StartByCBOpen=Enabled*. It is then necessary to block reclosing for all manual trip operations. Typically *CBAuxContType=NormClosed* is also set and a CB auxiliary contact of type NC (normally closed, 52b) is connected to inputs 52a and RI. When the signal changes from “CB closed” to “CB open” an auto-reclosing start pulse is generated and latched in the function, subject to the usual checks. Then the reclosing sequence continues as usual. One needs to connect signals from manual tripping and other functions, which shall not be reclosed automatically to the input INHIBIT.

13.2.2.4 Blocking of the autorecloser

Auto-Reclose attempts are expected to take place only for faults on the own line. The Auto-Recloser must be blocked by activating the INHIBIT input for the following conditions:

- Tripping from Delayed Distance protection zones
- Tripping from Back-up protection functions
- Tripping from Breaker failure function
- Intertrip received from remote end Breaker failure function
- Busbar protection tripping

Depending of the starting principle (General Trip or only Instantaneous trip) adopted above the delayed and back-up zones might not be required. Breaker failure trip local and remote must however always be connected.

13.2.2.5 Control of the auto-reclosing open time for shot 1

Up to four different time settings can be used for the first shot, and one extension time. There are separate settings for single-, two- and three-phase auto-reclosing open time, *t1 1Ph, t1 2Ph, t1 3Ph*. If no particular input signal is applied, and an auto-reclosing program with single-phase reclosing is selected, the auto-reclosing open time *t1 1Ph* will be used. If one of the inputs TR2P or TR3P is activated in connection with the start, the auto-reclosing open time for two-phase or three-phase reclosing is used. There is also a separate

time setting facility for three-phase high-speed auto-reclosing without Synchrocheck, *t1 3PhHS*, available for use when required. It is activated by the RI_HS input.

An auto-reclosing open time extension delay, *tExtended t1*, can be added to the normal shot 1 delay. It is intended to come into use if the communication channel for permissive line protection is lost. In such a case there can be a significant time difference in fault clearance at the two ends of the line. A longer “auto-reclosing open time” can then be useful. This extension time is controlled by setting parameter *Extended t1=O*n and the input PLCLOST. If this function is used the autorecloser start must also be allowed from distance protection Zone 2 time delayed trip.

13.2.2.6 Long trip signal

In normal circumstances the trip command resets quickly because of fault clearance. The user can set a maximum trip pulse duration *tTrip*.If *Extended t1=Off*, a long trip signal interrupts the reclosing sequence in the same way as a signal to input INHIBIT. If *Extend t1=On* the long trip time inhibit is disabled and *Extend t1* is used instead.

13.2.2.7 Maximum number of reclosing shots

The maximum number of reclosing shots in an auto-reclosing cycle is selected by the setting parameter *NoOfShots*. The type of reclosing used at the first reclosing shot is set by parameter *ARMode*. The first alternative is three-phase reclosing. The other alternatives include some single-phase or two-phase reclosing. Usually there is no two-pole tripping arranged, and then there will be no two-phase reclosing.

The decision for single and 3 phase trip is also made in the tripping logic (SMPTTRC ,94) function block where the setting *3Ph, 1/3Ph (or1/2/3Ph)* is selected.

13.2.2.8 *ARMode=3ph,* (normal setting for a single 3 phase shot)

3-phase reclosing, one to five shots according to setting *NoOfShots*. The output Prepare three-pole trip PREP3P is always set (high). A trip operation is made as a three-pole trip at all types of fault. The reclosing is as a three-phase Reclosing as in mode 1/2/3ph described below. All signals, blockings, inhibits, timers, requirements and so on. are the same as in the example described below.

13.2.2.9 *ARMode= 1/2/3ph*

1-phase, 2-phase or 3-phase reclosing first shot, followed by 3-phase reclosing shots, if selected. Here, the auto-reclosing function is assumed to be "On" and "Ready". The breaker is closed and the operation gear ready (operating energy stored). Input RI (or RI_HS) is received and sealed-in. The output READY is reset (set to false). Output ACTIVE is set.

- If inputs TR2P is low and TR3P is low (1-pole trip): The timer for 1-phase reclosing open time is started and the output 1PT1 (1-phase reclosing in progress) is activated. It can be used to suppress pole disagreement and ground-fault protection trip during the 1-phase open interval.
- If TR2P is high and TR3P is low (2-pole trip): The timer for 2-phase reclosing open time is started and the output 2PT1 (2-phase reclosing in progress) is activated.
- If TR3P is high (3-pole trip): The timer for 3-phase auto-reclosing open time, *t1 3Ph* is started and output 3PT1 (3-phase auto-reclosing shot 1 in progress) is set.
- If STARTHS is high (3-phase trip): The timer for 3-phase auto-reclosing open time, t1 3PhHS is started and output 3PT1 (3-phase auto-reclosing shot 1 in progress) is set.

While any of the auto-reclosing open time timers are running, the output INPROGR is activated. When the "open reset" timer runs out, the respective internal signal is transmitted to the output module for further checks and to issue a closing command to the circuit breaker.

When a CB closing command is issued the output prepare 3-pole trip is set. When issuing a CB closing command a “reset” timer *tReset* is started. If no tripping takes place during that time the auto-reclosing function resets to the “Ready” state and the signal ACTIVE resets. If the first reclosing shot fails, a 3-pole trip will be initiated and 3-phase reclosing can follow, if selected.

13.2.2.10 *ARMode*= *1/2ph*, 1-phase or 2-phase reclosing in the first shot.

In 1-pole or 2-pole tripping, the operation is as in the above described example, program mode *1/2/3ph*. If the first reclosing shot fails, a 3-pole trip will be issued and 3-phase reclosing can follow, if selected. In the event of a 3-pole trip, TR3P high, the auto-reclosing will be blocked and no reclosing takes place.

13.2.2.11 *ARMode*=1ph + 1*2ph, 1-phase or 2-phase reclosing in the first shot

The 1-phase reclosing attempt can be followed by 3-phase reclosing, if selected. A failure of a 2-phase reclosing attempt will block the auto-reclosing. If the first trip is a 3-pole trip the auto-reclosing will be blocked. In the event of a 1-pole trip, (TR2P low and TR3P low), the operation is as in the example described above, program mode *1/2/3ph*. If the first reclosing shot fails, a 3-pole trip will be initiated and 3-phase reclosing can follow, if selected. A maximum of four additional shots can be done (according to the *NoOfShots* parameter). At 2-pole trip (TR2P high and TR3P low), the operation is similar to the above. But, if the first reclosing shot fails, a 3-pole trip will be issued and the auto-reclosing will be blocked. No more shots are attempted! The expression *1*2ph* should be understood as “Just one shot at 2-phase reclosing” During 3-pole trip (TR2P low and TR3P high) the auto-reclosing will be blocked and no reclosing takes place.

13.2.2.12 ARMode=1/2ph + 1*3ph, 1-phase, 2-phase or 3-phase reclosing in the first shot

At 1-phase or 2-phase trip, the operation is as described above. If the first reclosing shot fails, a 3-phase trip will be issued and 3-phase reclosing will follow, if selected. At 3-phase trip, the operation is similar to the above. But, if the first reclosing shot fails, a 3-phase trip command will be issued and the auto-reclosing will be blocked. No more shots take place! 1*3ph should be understood as “Just one shot at 3-phase reclosing”.

13.2.2.13 *ARMode*=1ph + 1*2/3ph, 1-phase, 2-phase or 3-phase reclosing in the first shot

At 1-pole trip, the operation is as described above. If the first reclosing shot fails, a 3-pole trip will be issued and 3-phase reclosing will follow, if selected. At 2-pole or 3-pole trip, the operation is similar as above. But, if the first reclosing shot fails, a 3-pole trip will be issued and the auto-reclosing will be blocked. No more shots take place! “1*2/3ph” should be understood as “Just one shot at 2-phase or 3-phase reclosing”.

Table 24: Type of reclosing shots at different settings of ARMode or integer inputs to MODEINT

MODEINT (integer)	ARMode	Type of fault	1st shot	2nd-5th shot
1	3ph	1ph	3ph	3ph
		2ph	3ph	3ph
		3ph	3ph	3ph
2	1/2/3ph	1ph	1ph	3ph
		2ph	2ph	3ph
		3ph	3ph	3ph
3	1/2ph	1ph	1ph	3ph
		2ph	2ph	3ph
		3ph	.....	.....
4	1ph + 1*2ph	1ph	1ph	3ph
		2ph	2ph	.....
		3ph	.....	.....
5	1/2ph + 1*3ph	1ph	1ph	3ph
		2ph	2ph	3ph
		3ph	3ph	.....
6	1ph + 1*2/3ph	1ph	1ph	3ph
		2ph	2ph	.....
		3ph	3ph	.....

A start of a new reclosing cycle is blocked during the set “reset time” after the selected number of reclosing shots have been made.

13.2.2.14 External selection of auto-reclose mode

The auto-reclose mode can be selected by use of the available logic function blocks. Below is an example where the choice of mode is done from a hardware function key in front of the IED with only 3 phase or 1/3 phase mode, but alternatively there can for example, be a physical selector switch on the front of the panel which is connected to a binary to integer function block (BTIGAPC).

The connection example for selection of the auto-reclose mode is shown in Figure.

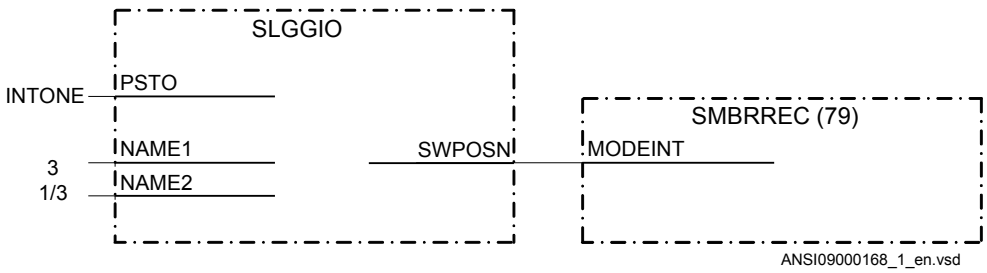

Figure 97: Selection of the auto-reclose mode from a hardware functional key in front of the IED

13.2.2.15 Reclosing reset timer

The reset timer *tReset* defines the time it takes from issue of the reclosing command, until the reclosing function resets. Should a new trip occur during this time, it is treated as a continuation of the first fault. The reclaim timer is started when the CB closing command is given.

13.2.2.16 Pulsing of the CB closing command and Counter

The CB closing command, CLOSECMD is given as a pulse with a duration set by parameter *tPulse*. For circuit-breakers without an anti-pumping function, close pulse cutting can be used. It is selected by parameter *CutPulse=On*. In case of a new trip pulse (start), the closing command pulse is then cut (interrupted). The minimum closing pulse length is always 50 ms. At the issue of the Reclosing command, the appropriate Reclosing operation counter is incremented. There is a counter for each type of Reclosing and one for the total number of Reclosing commands.

13.2.2.17 Transient fault

After the Reclosing command the reset timer keeps running for the set time. If no tripping occurs within this time, *tReset*, the Auto-Reclosing will reset. The CB remains closed and the operating gear recharges. The input signals 52a and CBREADY will be set

13.2.2.18 Permanent fault and reclosing unsuccessful signal

If a new trip occurs, and number of reclosing shots is set to 1, a new input signal RI or TRSOTF appears, after the CB closing command, the output UNSUCCL (unsuccessful closing) is set high. The timer for the first shot can no longer be started. Depending on the set number of Reclosing shots further shots may be made or the Reclosing sequence is ended. After reset timer time-out the Auto-Reclosing function resets, but the CB remains open. The “CB closed” information through the input 52a is missing. Thus, the reclosing function is not ready for a new reclosing cycle.

Normally, the signal UNSUCCL appears when a new trip and start is received after the last reclosing shot has been made and the auto-reclosing function is blocked. The signal resets after reset time. The “unsuccessful” signal can also be made to depend on CB position input. The parameter *UnsucClByCBChk* should then be set to *CBCheck*, and a timer *tUnsucCl* should be set too. If the CB does not respond to the closing command and does not close, but remains open, the output UNSUCCL is set high after time *tUnsucCl*. The Unsuccessful output can for example, be used in Multi-Breaker arrangement to cancel the auto-reclosing function for the second breaker, if the first breaker closed onto a persistent fault. It can also be used to generate a Lock-out of manual closing until the operator has reset the Lock-out, see separate section.

13.2.2.19 Lock-out initiation

In many cases there is a requirement that a Lock-out is generated when the auto-reclosing attempt fails. This is done with logic connected to the in- and outputs of the Autoreclose function and connected to Binary IO as required. Many alternative ways of performing the logic exist depending on whether manual closing is interlocked in the IED, whether an external physical Lock-out relay exists and whether the reset is hardwired, or carried out by means of communication. There are also different alternatives regarding what shall generate Lock-out. Examples of questions are:

- Shall back-up time delayed trip give Lock-out (normally yes)
- Shall Lock-out be generated when closing onto a fault (mostly)
- Shall Lock-out be generated when the Autorecloser was OFF at the fault or for example, in Single phase AR mode and the fault was multi-phase (normally not as no closing attempt has been given)
- Shall Lock-out be generated if the Breaker did not have sufficient operating power for an auto-reclosing sequence (normally not as no closing attempt has been given)

In figures 98 and 99 the logic shows how a closing Lock-out logic can be designed with the Lock-out relay as an external relay alternatively with the Lock-out created internally with the manual closing going through the Synchro-check function. An example of Lock-out logic.

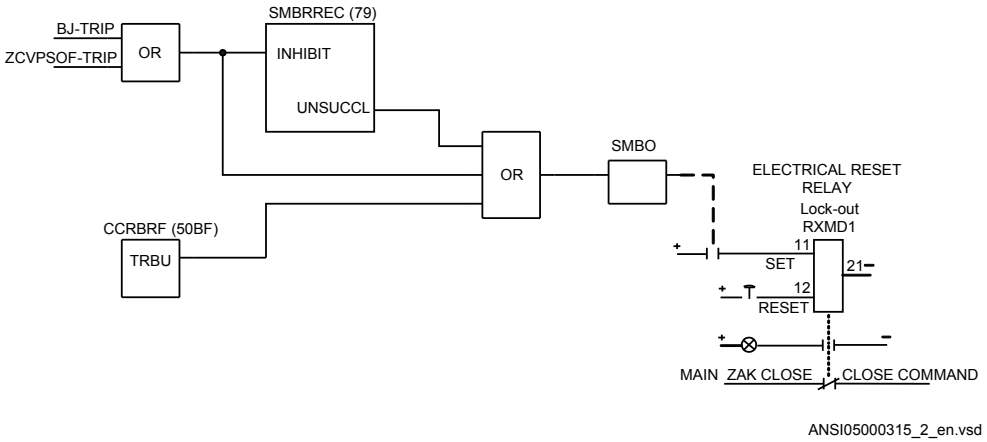

Figure 98: Lock-out arranged with an external Lock-out relay

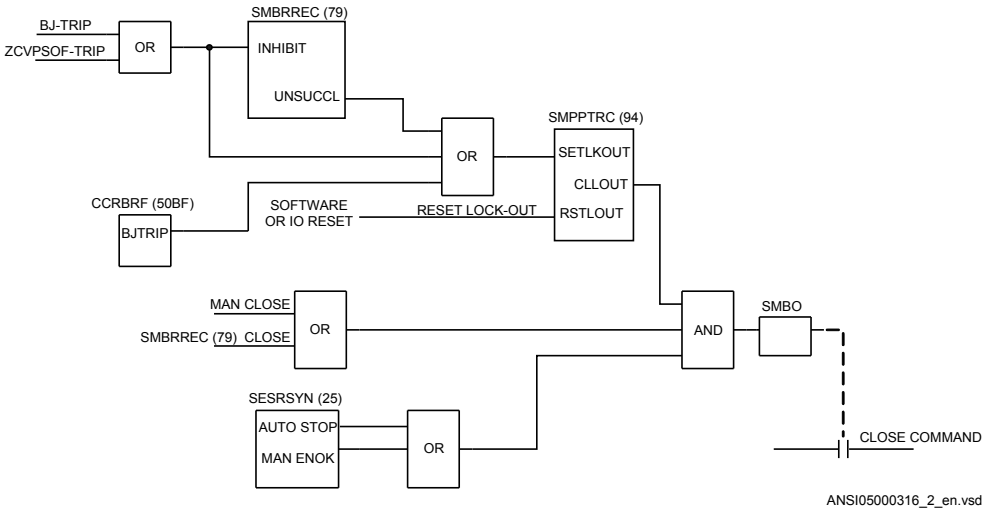

Figure 99: Lock-out arranged with internal logic with manual closing going through in IED

13.2.2.20 Evolving fault

An evolving fault starts as a single-phase fault which leads to single-pole tripping and then the fault spreads to another phase. The second fault is then cleared by three-pole tripping.

The Auto-Reclosing function will first receive a trip and initiate signal (RI) without any three-phase signal (TR3P). The Auto-Reclosing function will start a single-phase reclosing, if programmed to do so. At the evolving fault clearance there will be a new signal RI and three-pole trip information, TR3P. The single-phase reclosing sequence will then be stopped, and instead the timer, *t1 3Ph*, for three-phase reclosing will be started from zero. The sequence will continue as a three-phase reclosing sequence, if it is a selected alternative reclosing mode.

The second fault which can be single phase is tripped three phase because trip module (TR) in the IED has an evolving fault timer which ensures that second fault is always tripped three phase. For other types of relays where the relays do not include this function the output PREP3PH (or the inverted PERMIT1PH) is used to prepare the other sub-system for three pole tripping. This signal will, for evolving fault situations be activated a short time after the first trip has reset and will thus ensure that new trips will be three phase.

13.2.2.21 Automatic continuation of the reclosing sequence

SMBRREC (79) function can be programmed to proceed to the following reclosing shots (if multiple shots are selected) even if start signals are not received from the protection functions, but the breaker is still not closed. This is done by setting parameter *AutoCont = Enabled* and *tAutoContWait* to the required delay for the function to proceed without a new start.

13.2.2.22 Thermal overload protection holding the auto-reclosing function back

If the input THOLHOLD (thermal overload protection holding reclosing back) is activated, it will keep the reclosing function on a hold until it is reset. There may thus be a considerable delay between start of Auto-Reclosing and reclosing command to the circuit-breaker. An external logic limiting the time and sending an inhibit to the INHIBIT input can be used. The input can also be used to set the Auto-Reclosing on hold for a longer or shorter period.

13.2.3 Setting guidelines

13.2.3.1 Configuration

Use the PCM600 configuration tool to configure signals.

Autorecloser function parameters are set via the local HMI or Parameter Setting Tool (PST). Parameter Setting Tool is a part of PCM600.

Recommendations for input signals

Please see examples in figure 100, figure 101 and figure 102 of default factory configurations.

ON and OFF

These inputs can be connected to binary inputs or to a communication interface block for external control.

RI

It should be connected to the trip output protection function, which starts the autorecloser for 1/2/3-phase operation (SMBRREC ,79) function. It can also be connected to a binary input for start from an external contact. A logical OR-gate can be used to combine the number of start sources.

If *StartByCBOpen* is used, the CB Open condition shall also be connected to the input RI.

RI_HS, Initiate High-speed auto-reclosing

It may be used when one wants to use two different dead times in different protection trip operations. This input starts the dead time *t1 3PhHS*. High-speed reclosing shot 1 started by this input is without a synchronization check.

INHIBIT

To this input shall be connected signals that interrupt a reclosing cycle or prevent a start from being accepted. Such signals can come from protection for a line connected shunt reactor, from transfer trip receive, from back-up protection functions, busbar protection trip or from breaker failure protection. When the CB open position is set to start SMBRREC(79) , then manual opening must also be connected here. The inhibit is often a combination of signals from external IEDs via the IO and internal functions. An OR gate is then used for the combination.

52a and CBREADY

These should be connected to binary inputs to pick-up information from the CB. The 52a input is interpreted as CB Closed, if parameter *CBAuxContType* is set *NormOpen*, which is the default setting. At three operating gears in the breaker (single pole operated breakers) the connection should be “All poles closed” (series connection of the NO contacts) or “At least one pole open” (parallel connection of NC contacts) if the *CBAuxContType* is set to *NormClosed*. The “CB Ready” is a signal meaning that the CB is ready for a reclosing operation, either Close-Open (CO), or Open-Close-Open (OCO). If the available signal is of type “CB not charged” or “not ready”, an inverter can be inserted in front of the CBREADY input.

SYNC

This is connected to the internal synchronism check function when required. It can also be connected to a binary input for synchronization from an external device. If neither internal nor external synchronism or energizing check is required, it can be connected to a permanently high source, TRUE. The signal is required for three phase shots 1-5 to proceed (Note! Not the HS step).

PLCLOST

This is intended for line protection permissive signal channel lost (fail) for example, PLC= Power Line Carrier fail. It can be connected, when required to prolong the AutoReclosing time when communication is not working, that is, one line end might trip with a zone 2 delay. If this is used the autorecloser must also be started from Zone2 time delayed trip.

TRSOTF

This is the signal “Trip by Switch Onto Fault”. It is usually connected to the “switch onto fault” output of line protection if multi-shot Auto-Reclose attempts are used. The input will start the shots 2-5.

THOLHOLD

Signal “Thermal overload protection holding back Auto-Reclosing”. It can be connected to a thermal overload protection trip signal which resets only when the thermal content has fallen to an acceptable level, for example, 70%. As long as the signal is high, indicating that the line is hot, the Auto-Reclosing is held back. When the signal resets, a reclosing cycle will continue. Please observe that this have a considerable delay. Input can also be used for other purposes if for some reason the Auto-Reclose shot need to be halted.

TR2P and TR3P

Signals for two-pole and three-pole trip. They are usually connected to the corresponding output of the TRIP block. They control the choice of dead time and the reclosing cycle according to the selected program. Signal TR2P needs to be connected only if the trip has been selected to give 1/2/3 pole trip and an auto reclosing cycle with two phase reclosing is foreseen.

WAIT

Used to hold back reclosing of the “low priority unit” during sequential reclosing. See “Recommendation for multi-breaker arrangement” below. The signal is activated from output WFMASTER on the second breaker Auto-Recloser in multi-breaker arrangements.

BLKON

Used to block the autorecloser for 3-phase operation (SMBRREC ,79) function for example, when certain special service conditions arise. When used, blocking must be reset with BLOCKOFF.

BLOCKOFF

Used to Unblock SMBRREC (79) function when it has gone to Block due to activating input BLKON or by an unsuccessful Auto-Reclose attempt if the setting*BlockByUnsucCl* is set to *Enabled*.

RESET

Used to Reset SMBRREC (79) to start condition. Possible Thermal overload Hold will be reset. Positions, setting On-Off. will be started and checked with set times.

Recommendations for output signals

Please see figure 100, figure 101 and figure 102 and default factory configuration for examples.

SETON

Indicates that Autorecloser for 1/2/3-phase operation (SMBRREC ,79) function is switched on and operative.

BLOCKED

Indicates that SMRREC (79) function is temporarily or permanently blocked.

ACTIVE

Indicates that SMBRREC (79) is active, from start until end of Reset time.

INPROGR

Indicates that a sequence is in progress, from start until reclosing command.

UNSUCCL

Indicates unsuccessful reclosing.

CLOSECMD

Connect to a binary output for circuit-breaker closing command.

READY

Indicates that SMBRREC (79) function is ready for a new and complete reclosing sequence. It can be connected to the zone extension if a line protection should extended zone reach before automatic reclosing.

1PT1 and 2PT1

Indicates that single-phase or two-phase automatic reclosing is in progress. It is used to temporarily block an ground-fault and/or pole disagreement function during the single-phase or two-phase open interval.

3PT1, 3PT2, 3PT3, 3PT4 and 3PT5

Indicates that three-phase automatic reclosing shots 1-5 are in progress. The signals can be used as an indication of progress or for own logic.

PREP3P

Prepare three-pole trip is usually connected to the trip block to force a coming trip to be a three-phase one. If the function cannot make a single-phase or two-phase reclosing, the tripping should be three-pole.

PERMIT1P

Permit single-pole trip is the inverse of PREP3P. It can be connected to a binary output relay for connection to external protection or trip relays. In case of a total loss of auxiliary power, the output relay drops and does not allow single-pole trip.

WFMASTER

Wait from master is used in high priority units to hold back reclosing of the low priority unit during sequential reclosing. Refer to the recommendation for multi-breaker arrangements in figure 102.

Other outputs

The other outputs can be connected for indication, disturbance recording, as required.

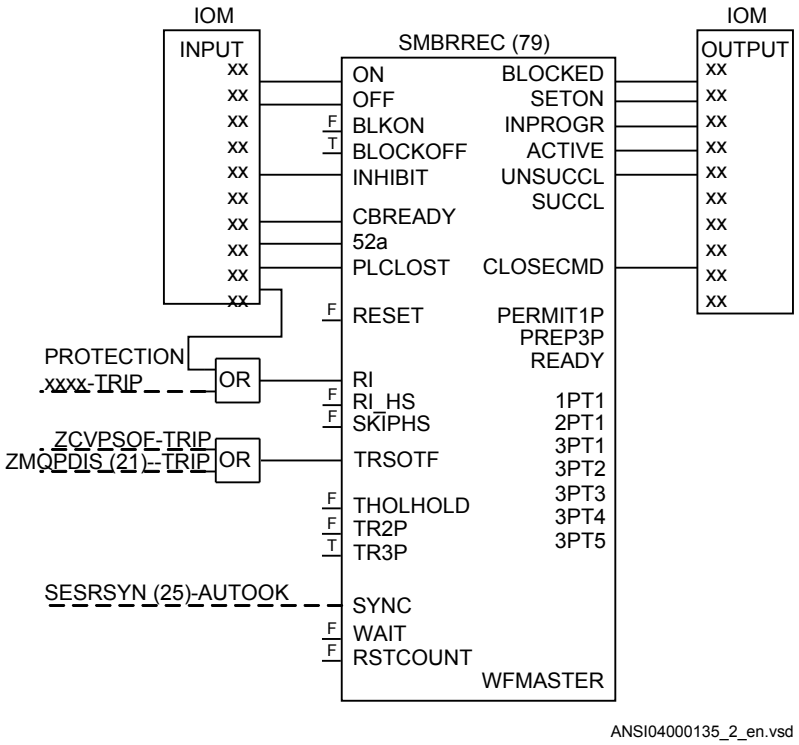

Figure 100: Example of I/O-signal connections at a three-phase reclosing function

Setting recommendations for multi-breaker arrangements

Sequential reclosing in multi-breaker arrangements, like breaker-and-a-half, double breaker and ring bus, is achieved by giving the two line breakers different priorities. Please refer to figure 102. In a single breaker arrangement the setting is *Priority = None*. In a multi-breaker arrangement the setting for the first CB, the Master, is *Priority = High* and for the other CB *Priority = Low*.

While the reclosing of the master is in progress, it issues the signal WFMASTER. A reset delay of one second ensures that the WAIT signal is kept high for the duration of the breaker closing time. After an unsuccessful reclosing it is also maintained by the signal UNSUCCL. In the slave unit, the signal WAIT holds back a reclosing operation. When the WAIT signal is reset at the time of a successful reclosing of the first CB, the slave unit is released to continue the reclosing sequence. A parameter *tWait* sets a maximum waiting time for the reset of the WAIT. At time-out it interrupts the reclosing cycle of the slave unit. If reclosing of the first breaker is unsuccessful, the output signal UNSUCCL connected to the input INHIBIT of the slave unit interrupts the reclosing sequence of the latter.

The signals can be cross-connected to allow simple changing of the priority by just setting the *High* and the *Low* priorities without changing

the configuration. The inputs 52a for each breaker are important in multi breaker arrangements to ensure that the CB was closed at the beginning of the cycle. If the High priority breaker is not closed the High priority moves to the low priority breaker.

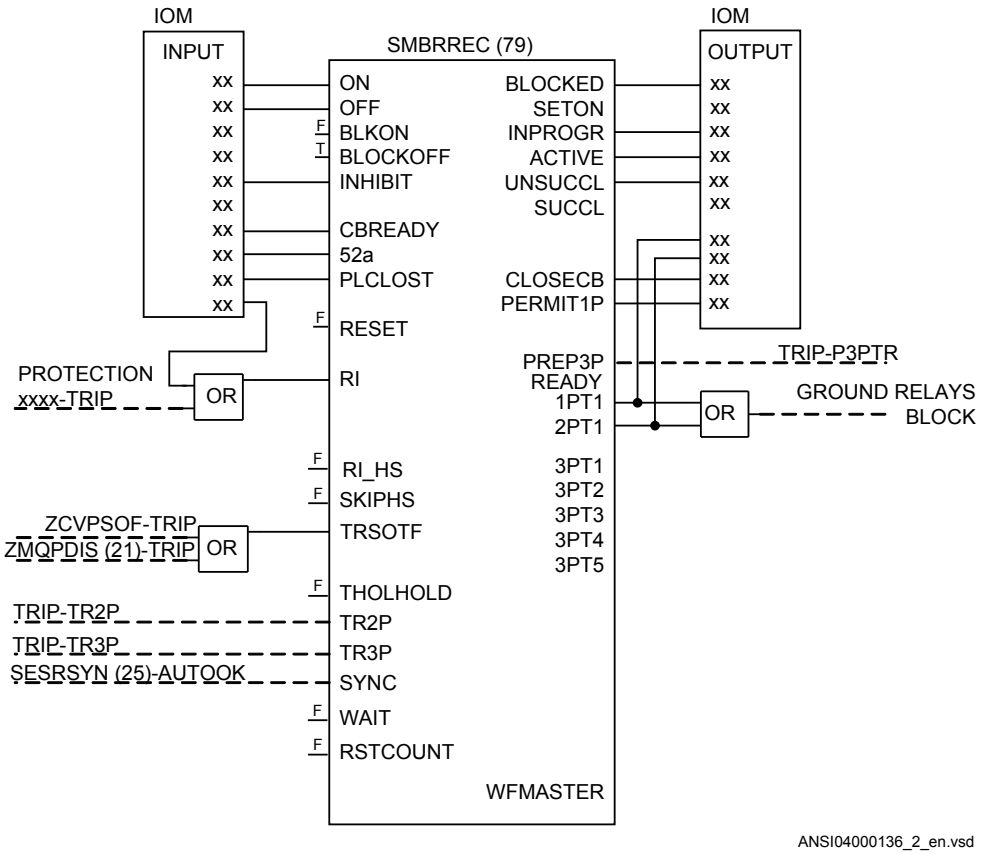

Figure 101: Example of I/O-signal connections in a single-phase, two-phase or three-phase reclosing function

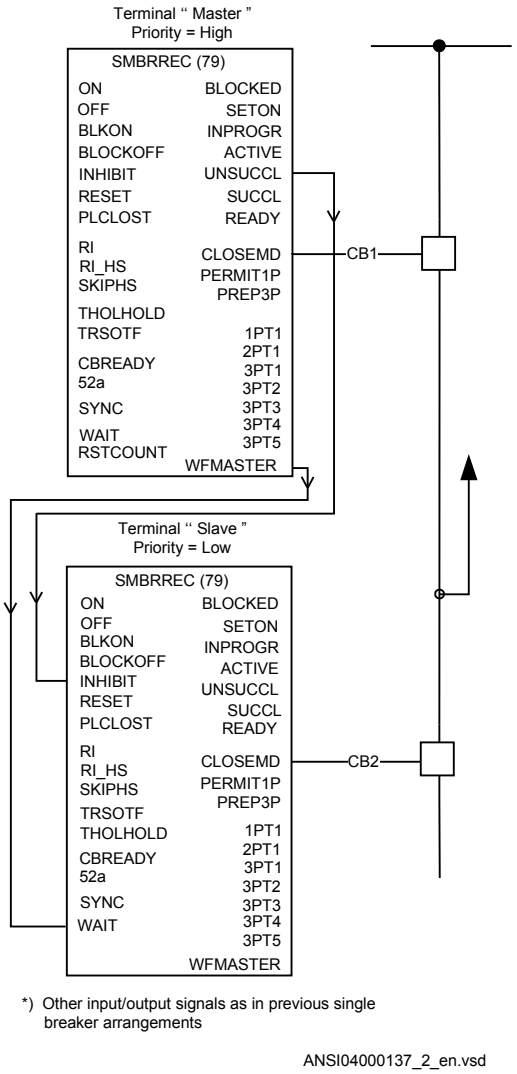

Figure 102: Additional input and output signals at multi-breaker arrangement. The connections can be made "symmetrical" to make it possible to control the priority by the settings, Priority:High/Low

13.2.3.2 Auto-recloser parameter settings

The operation of the Autorecloser for 1/2/3-phase operation (SMBRREC ,79) function can be switched *Enabled* and *Disabled*. The setting makes it possible to switch it *Enabled* or *Disabled* using an external switch via IO or communication ports.

, Number of reclosing shots

In power transmission 1 shot is mostly used. In most cases one reclosing shot is sufficient as the majority of arcing faults will cease after the first reclosing shot. In power systems with many other types of faults caused by other phenomena, for example wind, a greater number of reclose attempts (shots) can be motivated.

First shot and reclosing program

There are six different possibilities in the selection of reclosing programs. The type of reclosing used for different kinds of faults depends on the power system configuration and the users practices and preferences. When the circuit-breakers only have three-phase operation, then three-phase reclosing has to be chosen. This is usually the case in subtransmission and distribution lines. Three-pole tripping and reclosing for all types of faults is also widely accepted in completely meshed power systems. In transmission systems with few parallel circuits, single-phase reclosing for single-phase faults is an attractive alternative for maintaining service and system stability.

Auto-reclosing open times, dead times

Single-phase auto-reclosing time: A typical setting is *t1 1Ph = 800ms*. Due to the influence of energized phases the arc extinction may not be instantaneous. In long lines with high voltage the use of shunt reactors in the form of a WYE with a neutral reactor improves the arc extinction.

Three-phase shot 1 delay: For three-phase High-Speed Auto-Reclosing (HSAR) a typical open time is 400ms. Different local phenomena, such as moisture, salt, pollution, can influence the required dead time. Some users apply Delayed Auto-Reclosing (DAR) with delays of 10s or more. The delay of reclosing shot 2 and possible later shots are usually set at 30s or more. A check that the CB duty cycle can manage the selected setting must be done. The setting can in some cases be restricted by national regulations. For multiple shots the setting of shots 2-5 must be longer than the circuit breaker duty cycle time.

and , Extended auto-reclosing open time for shot 1.

The communication link in a permissive (not strict) line protection scheme, for instance a power line carrier (PLC) link, may not always be available. If lost, it can result in delayed tripping at one end of a line. There is a possibility to extend the auto-reclosing open time in such a case by use of an input to PLCLOST, and the setting parameters. Typical setting in such a case: *Extended t1 = On* and *tExtended t1 = 0.8 s*.

tSync, Maximum wait time for synchronismcheck

The time window should be coordinated with the operate time and other settings of the synchronism check function. Attention should also be paid to the possibility of a power swing when reclosing after a line fault. Too short a time may prevent a potentially successful reclosing.

tTrip, Long trip pulse

Usually the trip command and initiate auto-reclosing signal reset quickly as the fault is cleared. A prolonged trip command may depend on a CB failing to clear the fault. A trip signal present when the CB is reclosed will result in a new trip. Depending on the setting *Extended t1 = Off* or On a trip/initiate pulse longer than the *set time tTrip* will either block the reclosing or extend the auto-reclosing open time. A trip pulse longer than the set time *tTrip* will inhibit the reclosing. At a setting somewhat longer than the auto-reclosing open time, this facility will not influence the reclosing. A typical setting of *tTrip* could be close to the auto-reclosing open time.

tInhibit, Inhibit resetting delay

A typical setting is *tInhibit = 5.0 s* to ensure reliable interruption and temporary blocking of the function. Function will be blocked during this time after the *tinhibit* has been activated.

tReset, Reset time

The Reset time sets the time for resetting the function to its original state, after which a line fault and tripping will be treated as an independent new case with a new reclosing cycle. One may consider a nominal CB duty cycle of for instance, O-0.3sec CO- 3 min. – CO. However the 3 minute (180 s) recovery time is usually not critical as fault levels are mostly lower than rated value and the risk of a new fault within a short time is negligible. A typical time may be *tReset = 60 or 180 s* dependent of the fault level and breaker duty cycle.

StartByCBOpen

The normal setting is *Disabled*. It is used when the function is started by protection trip signals. If set *On* the start of the autorecloser is controlled by an CB auxiliary contact.

FollowCB

The usual setting is *Follow CB = Disabled*. The setting *Enabled* can be used for delayed reclosing with long delay, to cover the case when a CB is being manually closed during the “auto-reclosing open time” before the auto-reclosing function has issued its CB closing command.

tCBClosedMin

A typical setting is 5.0 s. If the CB has not been closed for at least this minimum time, a reclosing start will not be accepted.

CBAuxContType, CB auxiliary contact type

It shall be set to correspond to the CB auxiliary contact used. A *NormOpen* contact is recommended in order to generate a positive signal when the CB is in the closed position.

CBReadyType, Type of CB ready signal connected

The selection depends on the type of performance available from the CB operating gear. At setting *OCO* (CB ready for an Open – Close – Open cycle), the condition is checked only at the start of the reclosing cycle. The signal will disappear after tripping, but the CB will still be able to perform the C-O sequence. For the selection *CO* (CB ready for a Close – Open cycle) the condition is also checked after the set auto-reclosing dead time. This selection has a value first of all at multi-shot reclosing to ensure that the CB is ready for a C-O sequence at shot 2 and further shots. During single-shot reclosing, the *OCO* selection can be used. A breaker shall according to its duty cycle always have storing energy for a CO operation after the first trip. (IEC 56 duty cycle is O-0.3sec CO-3minCO).

tPulse, Breaker closing command pulse duration

The pulse should be long enough to ensure reliable operation of the CB. A typical setting may be *tPulse=200 ms*. A longer pulse setting may facilitate dynamic indication at testing, for example, in “Debug” mode of Application Configuration tool (ACT). In CBs without anti-pumping relays, the setting *CutPulse = Enabled* can be used to avoid repeated closing operation when reclosing onto a fault. A new initiation will then cut the ongoing pulse.

BlockByUnsucCl

Setting of whether an unsuccessful auto-reclose attempt shall set the Auto-Reclose in block. If used the inputs BLOCKOFF must be configured to unblock the function after an unsuccessful Reclosing attempt. Normal setting is *Disabled*.

UnsucClByCBCheck, Unsuccessful closing by CB check

The normal setting is *NoCBCheck*. The “auto-reclosing unsuccessful” event is then decided by a new trip within the reset time after the last reclosing shot. If one wants to get the UNSUCCL (Unsuccessful closing) signal in the case the CB does not respond to the closing command, CLOSECMD, one can set *UnsucClByCBCheck= CB Check* and set *tUnsucCl* for instance to 1.0 s.

Priority and time *tWaitForMaster*

In single CB applications, one sets *Priority = None*. At sequential reclosing the function of the first CB, e.g. near the busbar, is set *Priority = High* and for the second CB *Priority = Low*. The maximum waiting time, *tWaitForMaster* of the second CB is set longer than the “auto-reclosing open time” and a margin for synchronism check at the first CB. Typical setting is *tWaitForMaster=2sec*.

AutoCont and *tAutoContWait*, Automatic continuation to the next shot if the CB is not closed within the set time

The normal setting is *AutoCont = Disabled*. The *tAutoContWait* is the length of time SMBRREC (79) waits to see if the breaker is closed when *AutoCont* is set to *Enabled*. Normally, the setting can be *tAutoContWait = 2 sec*.

13.3 Apparatus control APC

13.3.1 Application

The apparatus control is a function for control and supervising of circuit breakers, disconnectors, and grounding switches within a bay. Permission to operate is given after evaluation of conditions from other functions such as interlocking, synchronism check, operator place selection and external or internal blockings.

Figure 103 gives an overview from what places the apparatus control function receive commands. Commands to an apparatus can be initiated from the Control Centre (CC), the station HMI or the local HMI on the IED front.

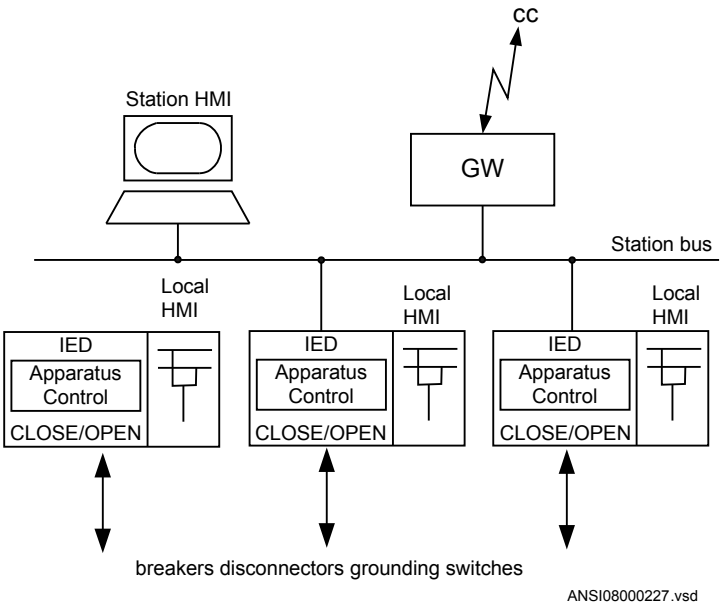

Figure 103: Overview of the apparatus control functions

Features in the apparatus control function:

- Operation of primary apparatuses
- Select-Execute principle to give high security
- Selection and reservation function to prevent simultaneous operation
- Selection and supervision of operator place
- Command supervision
- Block/deblock of operation
- Block/deblock of updating of position indications
- Substitution of position indications

- Overriding of interlocking functions
- Overriding of synchronism check
- Pole discrepancy supervision
- Operation counter
- Suppression of mid position

The apparatus control function is realized by means of a number of function blocks designated:

- Switch controller SCSWI
- Circuit breaker SXCBR
- Circuit switch SXSWI
- Bay control QCBAY
- Position evaluation POS_EVAL
- Bay reserve QCRSV
- Reservation input RESIN
- Local remote LOCREM
- Local remote control LOCREMCTRL

The signal flow between the function blocks is shown in Figure 104. To realize the reservation function, the function blocks Reservation input (RESIN) and Bay reserve (QCRSV) also are included in the apparatus control function. The application description for all these functions can be found below. The function SCILO in the Figure below is the logical node for interlocking.

Control operation can be performed from the local IED HMI. If the administrator has defined users with the IED Users tool in PCM600, then the local/remote switch is under authority control. If not, the default (factory) user is the SuperUser that can perform control operations from the local IED HMI without LogOn. The default position of the local/remote switch is on remote.

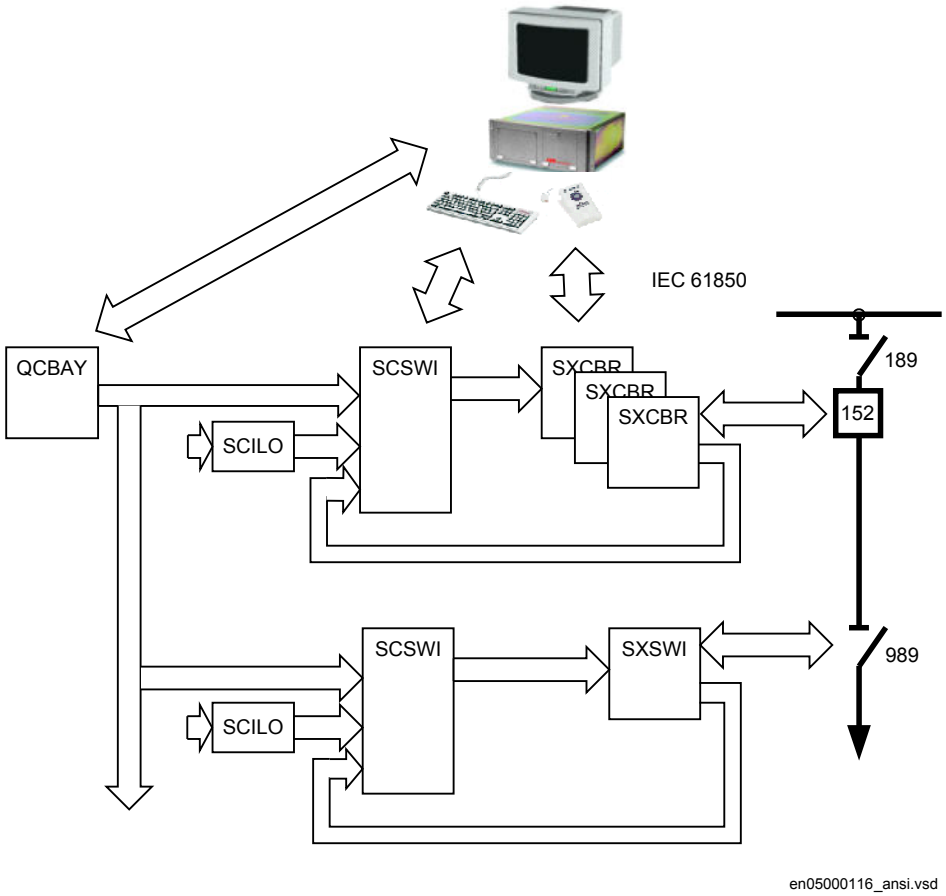

Figure 104: Signal flow between apparatus control function blocks

Accepted originator categories for PSTO

If the requested command is accepted by the authority, the value will change. Otherwise the attribute *blocked-by-switching-hierarchy* is set in the *cause* signal. If the PSTO value is changed during a command, then the command is aborted.

The accepted originator categories for each PSTO value are shown in Table 25

Table 25: Accepted originator categories for each PSTO

Permitted Source To Operate	Originator (orCat)
0 = Off	4,5,6
1 = Local	1,4,5,6
2 = Remote	2,3,4,5,6
3 = Faulty	4,5,6
Table continues on next page	

4 = Not in use	4,5,6
5 = All	1,2,3,4,5,6
6 = Station	2,4,5,6
7 = Remote	3,4,5,6

PSTO = All, then it is no priority between operator places. All operator places are allowed to operate.

According to IEC61850 standard the *orCat* attribute in originator category are defined in Table 26

Table 26: orCat attribute according to IEC61850

Value	Description
0	not-supported
1	bay-control
2	station-control
3	remote-control
4	automatic-bay
5	automatic-station
6	automatic-remote
7	maintenance
8	process

13.3.1.1 Bay control (QCBAY)

The Bay control (QCBAY) is used to handle the selection of the operator place per bay. The function gives permission to operate from two main types of locations either from Remote (for example, control centre or station HMI) or from Local (local HMI on the IED) or from all (Local and Remote). The Local/Remote switch position can also be set to Off, which means no operator place selected that is, operation is not possible either from local or from remote.

For IEC 61850-8-1 communication, the Bay Control function can be set to discriminate between commands with orCat station and remote (2 and 3). The selection is then done through the IEC61850-8-1 edition 2 command LocSta.

QCBAY also provides blocking functions that can be distributed to different apparatuses within the bay. There are two different blocking alternatives:

- Blocking of update of positions
- Blocking of commands

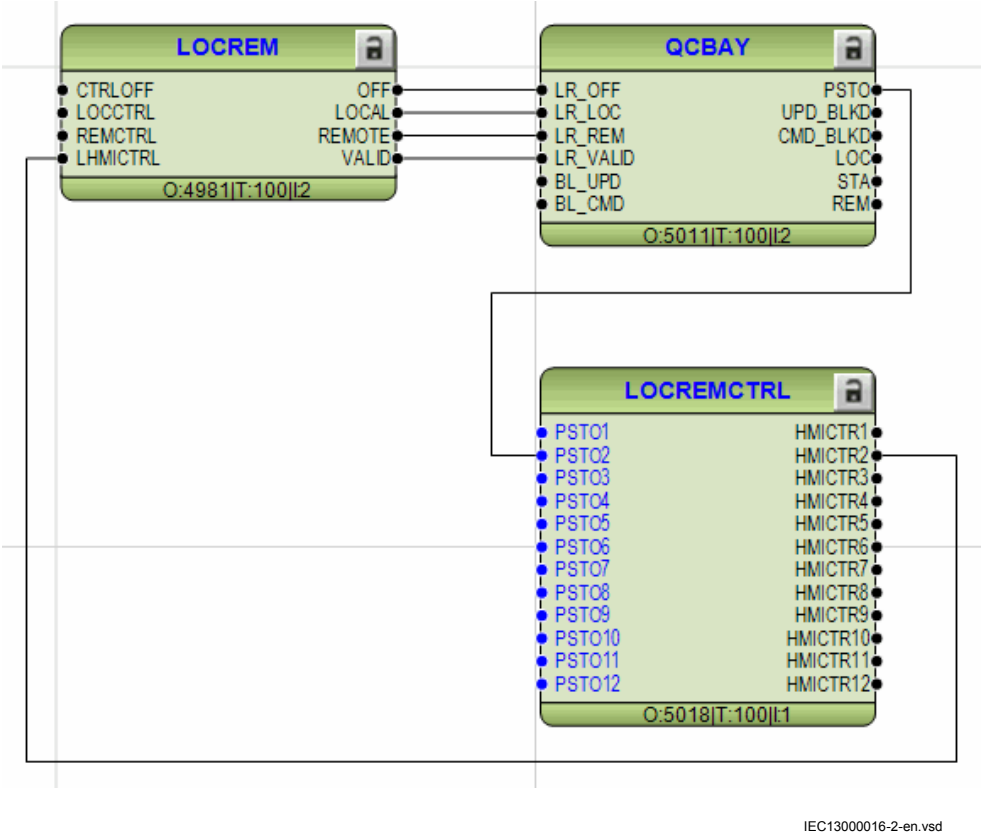

Figure 105: APC - Local remote function block

13.3.1.2 Switch controller (SCSWI)

SCSWI may handle and operate on one three-phase device or three one-phase switching devices.

After the selection of an apparatus and before the execution, the switch controller performs the following checks and actions:

- A request initiates to reserve other bays to prevent simultaneous operation.
- Actual position inputs for interlocking information are read and evaluated if the operation is permitted.
- The synchronism check/synchronizing conditions are read and checked, and performs operation upon positive response.
- The blocking conditions are evaluated
- The position indications are evaluated according to given command and its requested direction (open or closed).

The command sequence is supervised regarding the time between:

- Select and execute.
- Select and until the reservation is granted.
- Execute and the final end position of the apparatus.
- Execute and valid close conditions from the synchronism check.

At error the command sequence is cancelled.

In the case when there are three one-phase switches (SXCBR) connected to the switch controller function, the switch controller will "merge" the position of the three switches to the resulting three-phase position. In case of a pole discrepancy situation, that is, the positions of the one-phase switches are not equal for a time longer than a settable time; an error signal will be given.

The switch controller is not dependent on the type of switching device SXCBR or SXSWI. The switch controller represents the content of the SCSWI logical node (according to IEC 61850) with mandatory functionality.

13.3.1.3 Switches (SXCBR/SXSWI)

Switches are functions used to close and interrupt an ac power circuit under normal conditions, or to interrupt the circuit under fault, or emergency conditions. The intention with these functions is to represent the lowest level of a power-switching device with or without short circuit breaking capability, for example, circuit breakers, disconnectors, grounding switches etc.

The purpose of these functions is to provide the actual status of positions and to perform the control operations, that is, pass all the commands to the primary apparatus via output boards and to supervise the switching operation and position.

Switches have the following functionalities:

- Local/Remote switch intended for the switchyard
- Block/deblock for open/close command respectively
- Update block/deblock of position indication
- Substitution of position indication
- Supervision timer that the primary device starts moving after a command
- Supervision of allowed time for intermediate position
- Definition of pulse duration for open/close command respectively

The realizations of these function are done with SXCBR representing a circuit breaker and with SXSWI representing a circuit switch that is, a disconnector or an grounding switch.

Circuit breaker (SXCBR) can be realized either as three one-phase switches or as one three-phase switch.

The content of this function is represented by the IEC 61850 definitions for the logical nodes Circuit breaker (SXCBR) and Circuit switch (SXSWI) with mandatory functionality.

13.3.1.4 Reservation function (QCRSV and RESIN)

The purpose of the reservation function is primarily to transfer interlocking information between IEDs in a safe way and to prevent double operation in a bay, switchyard part, or complete substation.

For interlocking evaluation in a substation, the position information from switching devices, such as circuit breakers, disconnectors and grounding switches can be required from the same bay or from several other bays. When information is needed from other bays, it is exchanged over the station bus between the distributed IEDs. The problem that arises, even at a high speed of communication, is a space of time during which the information about the position of the switching devices are uncertain. The interlocking function uses this information for evaluation, which means that also the interlocking conditions are uncertain.

To ensure that the interlocking information is correct at the time of operation, a unique reservation method is available in the IEDs. With this reservation method, the bay that wants the reservation sends a reservation request to other bays and then waits for a reservation granted signal from the other bays. Actual position indications from these bays are then transferred over the station bus for evaluation in the IED. After the evaluation the operation can be executed with high security.

This functionality is realized over the station bus by means of the function blocks QCRSV and RESIN. The application principle is shown in Figure 106.

The function block QCRSV handles the reservation. It sends out either the reservation request to other bays or the acknowledgement if the bay has received a request from another bay.

The other function block RESIN receives the reservation information from other bays. The number of instances is the same as the number of involved bays (up to 60 instances are available). The received signals are either the request for reservation from another bay or the acknowledgment from each bay respectively, which have received a request from this bay. Also the information of valid transmission over the station bus must be received.

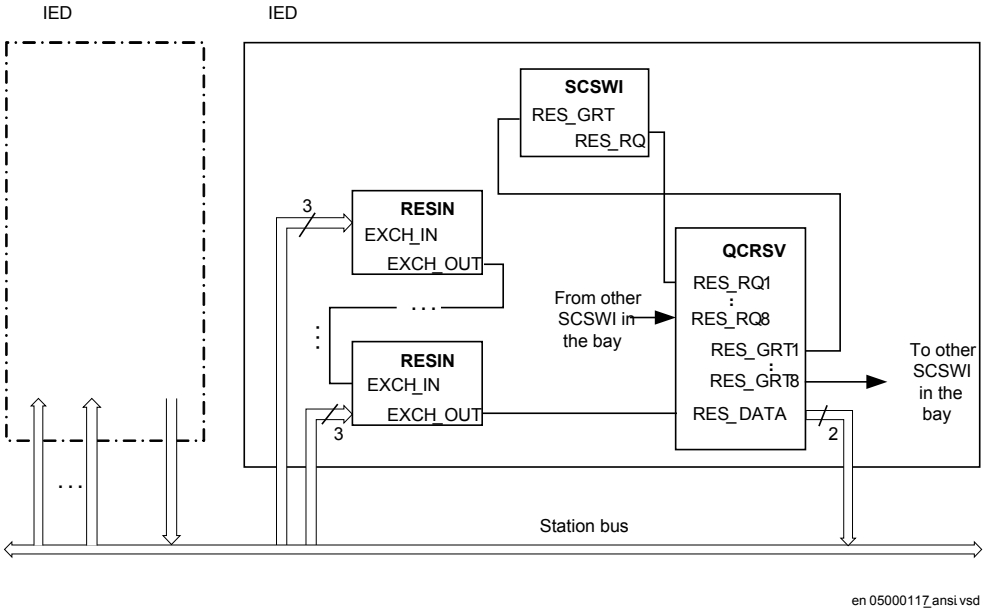

Figure 106: Application principles for reservation over the station bus

The reservation can also be realized with external wiring according to the application example in Figure 107. This solution is realized with external auxiliary relays and extra binary inputs and outputs in each IED, but without use of function blocks QCRSV and RESIN.

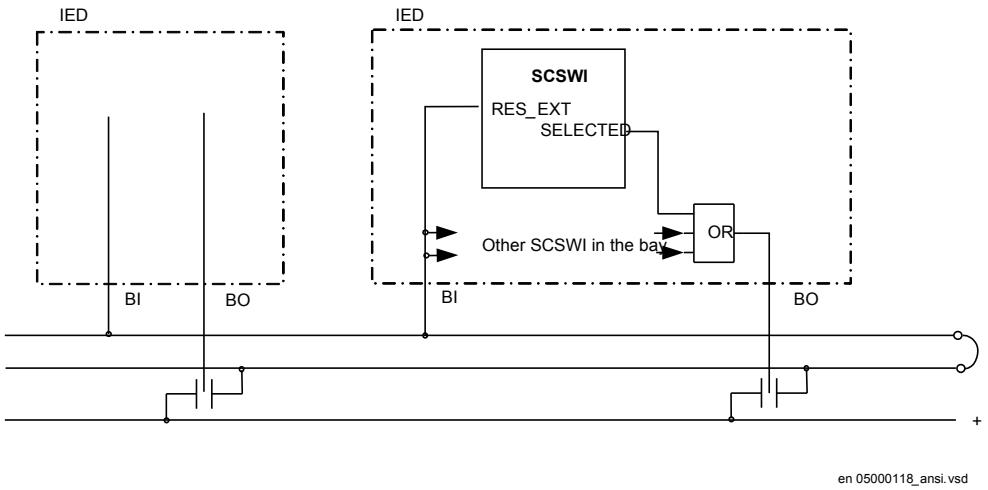

Figure 107: Application principles for reservation with external wiring

The solution in Figure 107 can also be realized over the station bus according to the application example in Figure 108. The solutions in Figure 107 and Figure 108 do not have

the same high security compared to the solution in Figure 106, but instead have a higher availability, since no acknowledgment is required.

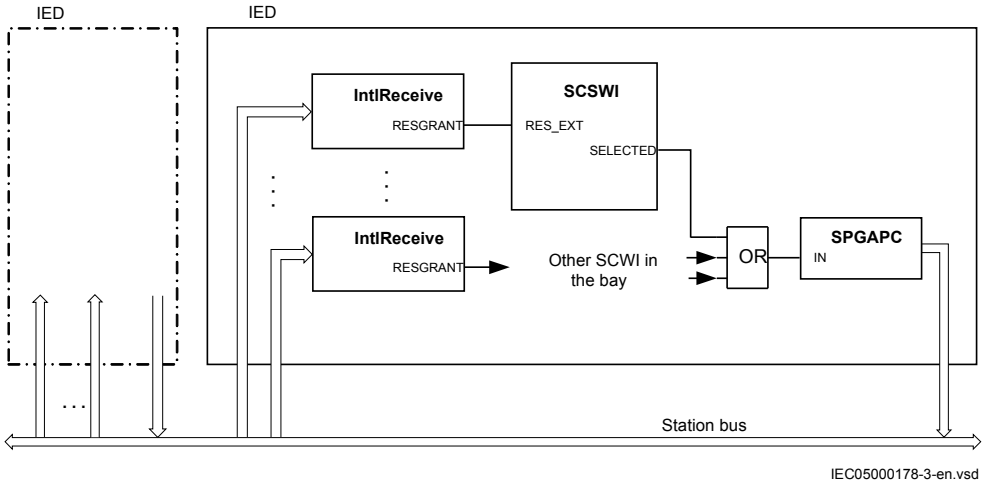

Figure 108: Application principle for an alternative reservation solution

13.3.2 Interaction between modules

A typical bay with apparatus control function consists of a combination of logical nodes or functions that are described here:

- The Switch controller (SCSWI) initializes all operations for one apparatus. It is the command interface of the apparatus. It includes the position reporting as well as the control of the position
- The Circuit breaker (SXCBR) is the process interface to the circuit breaker for the apparatus control function.
- The Circuit switch (SXSWI) is the process interface to the disconnector or the grounding switch for the apparatus control function.
- The Bay control (QCBAY) fulfils the bay-level functions for the apparatuses, such as operator place selection and blockings for the complete bay.
- The Reservation (QCRSV) deals with the reservation function.
- The Protection trip logic (SMPPTRC, 94) connects the "trip" outputs of one or more protection functions to a common "trip" to be transmitted to SXCBR.
- The Autorecloser (SMBRREC, 79) consists of the facilities to automatically close a tripped breaker with respect to a number of configurable conditions.
- The logical node Interlocking (SCILO, 3) provides the information to SCSWI whether it is permitted to operate due to the switchyard topology. The interlocking conditions are evaluated with separate logic and connected to SCILO (3).
- The Synchronism, energizing check, and synchronizing (SESRSYN, 25) calculates and compares the voltage phasor difference from both sides of an open breaker with

predefined switching conditions (synchronism check). Also the case that one side is dead (energizing-check) is included.

- The Generic Automatic Process Control function, GAPC, handles generic commands from the operator to the system.

The overview of the interaction between these functions is shown in Figure 109 below.

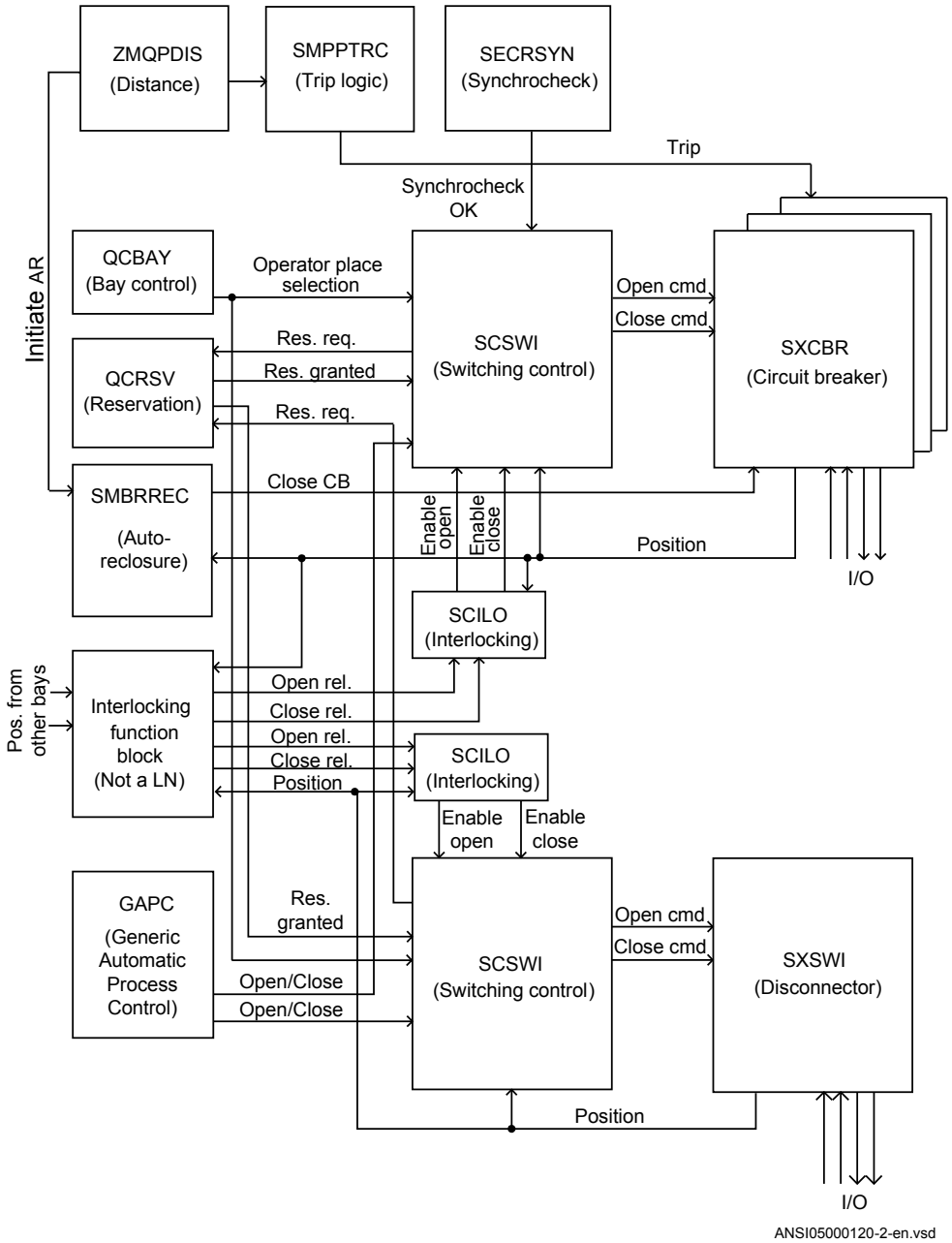

Figure 109: Example overview of the interactions between functions in a typical bay

13.3.3 Setting guidelines

The setting parameters for the apparatus control function are set via the local HMI or PCM600.

13.3.3.1 Bay control (QCBAY)

If the parameter *AllPSTOValid* is set to *No priority*, all originators from local and remote are accepted without any priority.

If the parameter *RemoteIncStation* is set to *Yes*, commands from IEC61850-8-1 clients at both station and remote level are accepted, when the QCBAY function is in Remote. If set to *No*, the command LocSta controls which operator place is accepted when QCBAY is in Remote. If LocSta is true, only commands from station level are accepted, otherwise only commands from remote level are accepted.

The parameter *RemoteIncStation* has only effect on the IEC61850-8-1 communication. Further, when using IEC61850 edition 1 communication, the parameter should be set to *Yes*, since the command LocSta is not defined in IEC61850-8-1 edition 1.

13.3.3.2 Switch controller (SCSWI)

The parameter *CtlModel* specifies the type of control model according to IEC 61850. The default for control of circuit breakers, disconnectors and grounding switches the control model is set to *SBO Enh* (Select-Before-Operate) with enhanced security.

When the operation shall be performed in one step, and no monitoring of the result of the command is desired, the model direct control with normal security is used.

At control with enhanced security there is an additional supervision of the status value by the control object, which means that each command sequence must be terminated by a termination command.

The parameter *PosDependent* gives permission to operate depending on the position indication, that is, at *Always permitted* it is always permitted to operate independent of the value of the position. At *Not perm at 00/11* it is not permitted to operate if the position is in bad or intermediate state.

tSelect is the maximum allowed time between the select and the execute command signal, that is, the time the operator has to perform the command execution after the selection of the object to operate. When the time has expired, the selected output signal is set to false and a cause-code is given.

The time parameter *tResResponse* is the allowed time from reservation request to the feedback reservation granted from all bays involved in the reservation function. When the time has expired, the control function is reset, and a cause-code is given.

tSynchrocheck is the allowed time for the synchronism check function to fulfill the close conditions. When the time has expired, the function tries to start the synchronizing

function. If *tSynchrocheck* is set to *0*, no synchrocheck is done, before starting the synchronizing function.

The timer *tSynchronizing* supervises that the signal synchronizing in progress is obtained in SCSWI after start of the synchronizing function. The start signal for the synchronizing is set if the synchronism check conditions are not fulfilled. When the time has expired, the control function is reset, and a cause-code is given. If no synchronizing function is included, the time is set to *0*, which means no start of the synchronizing function is done, and when *tSynchrocheck* has expired, the control function is reset and a cause-code is given.

tExecutionFB is the maximum time between the execute command signal and the command termination. When the time has expired, the control function is reset and a cause-code is given.

tPoleDiscord is the allowed time to have discrepancy between the poles at control of three single-phase breakers. At discrepancy an output signal is activated to be used for trip or alarm, and during a command, the control function is reset, and a cause-code is given.

SuppressMidPos when *On* suppresses the mid-position during the time *tIntermediate* of the connected switches.

The parameter *InterlockCheck* decides if interlock check should be done at both select and operate, Sel & Op phase, or only at operate, Op phase.

13.3.3.3 Switch (SXCBR/SXSWI)

tStartMove is the supervision time for the apparatus to start moving after a command execution. When the time has expired, the switch function is reset, and a cause-code is given.

During the *tIntermediate* time the position indication is allowed to be in an intermediate (00) state. When the time has expired, the switch function is reset, and a cause-code is given. The indication of the mid-position at SCSWI is suppressed during this time period when the position changes from open to close or vice-versa if the parameter *SuppressMidPos* is set to *On* in the SCSWI function.

If the parameter *AdaptivePulse* is set to *Adaptive* the command output pulse resets when a new correct end position is reached. If the parameter is set to *Not adaptive* the command output pulse remains active until the timer *tOpenPulsetClosePulse* has elapsed.

tOpenPulse is the output pulse length for an open command. If *AdaptivePulse* is set to *Adaptive*, it is the maximum length of the output pulse for an open command. The default length is set to 200 ms for a circuit breaker (SXCBR) and 500 ms for a disconnector (SXSWI).

tClosePulse is the output pulse length for a close command. If *AdaptivePulse* is set to *Adaptive*, it is the maximum length of the output pulse for an open command. The default length is set to 200 ms for a circuit breaker (SXCBR) and 500 ms for a disconnector (SXSWI).

13.3.3.4 Bay Reserve (QCRSV)

The timer *tCancelRes* defines the supervision time for canceling the reservation, when this cannot be done by requesting bay due to for example communication failure.

When the parameter *ParamRequestx* (*x*=1-8) is set to *Only own bay res.* individually for each apparatus (x) in the bay, only the own bay is reserved, that is, the output for reservation request of other bays (RES_BAYS) will not be activated at selection of apparatus x.

13.3.3.5 Reservation input (RESIN)

With the *FutureUse* parameter set to *Bay future use* the function can handle bays not yet installed in the SA system.

13.4 Voltage control

13.4.1 Identification

Function description	IEC 61850 identification	IEC 60617 identification	ANSI/IEEE C37.2 device number
Automatic voltage control for tap changer, single control	TR1ATCC	U↕	90
Automatic voltage control for tap changer, parallel control	TR8ATCC	U↕II	90
Tap changer control and supervision, 6 binary inputs	TCMYLTC	-	84
Tap changer control and supervision, 32 binary inputs	TCLYLTC	-	84

13.4.2 Application

When the load in a power network is increased the voltage will decrease and vice versa. To maintain the network voltage at a constant level, power transformers are usually equipped with on-load tap-changer. This alters the power transformer ratio in a number of predefined steps and in that way changes the voltage. Each step usually represents a change in voltage of approximately 0.5-1.7%.

The voltage control function is intended for control of power transformers with a motor driven on-load tap-changer. The function is designed to regulate the voltage at the secondary side of the power transformer. The control method is based on a step-by-step principle which means that a control pulse, one at a time, will be issued to the tap changer mechanism to move it one position up or down. The length of the control pulse can be set within a wide range to accommodate different types of tap changer mechanisms. The pulse is generated whenever the measured voltage, for a given time, deviates from the set reference value by more than the preset deadband (degree of insensitivity).

The voltage can be controlled at the point of voltage measurement, as well as at a load point located out in the network. In the latter case, the load point voltage is calculated based on the measured load current and the known impedance from the voltage measuring point to the load point.

The automatic voltage control can be either for a single transformer, or for parallel transformers. Parallel control of power transformers can be made in three alternative ways:

- With the master-follower method
- With the reverse reactance method
- With the circulating current method

Of these alternatives, the first and the last require communication between the function control blocks of the different transformers, whereas the middle alternative does not require any communication.

The voltage control includes many extra features such as possibility to avoid simultaneous tapping of parallel transformers, hot stand by regulation of a transformer within a parallel group, with a LV CB open, compensation for a possible capacitor bank on the LV side bay of a transformer, extensive tap changer monitoring including contact wear and hunting detection, monitoring of the power flow in the transformer so that for example, the voltage control can be blocked if the power reverses and so on.

The voltage control function is built up by two function blocks which both are logical nodes in IEC 61850-8-1:

- Automatic voltage control for tap changer, TR1ATCC (90) for single control and TR8ATCC (90) for parallel control.
- Tap changer control and supervision, 6 binary inputs, TCMYLTC (84) and 32 binary inputs, TCLYLTC (84)

Automatic voltage control for tap changer, TR1ATCC (90) or TR8ATCC (90) is a function designed to automatically maintain the voltage at the LV-side side of a power transformer within given limits around a set target voltage. A raise or lower command is generated whenever the measured voltage, for a given period of time, deviates from the set target value by more than the preset deadband value (degree of insensitivity). A time delay (inverse or definite time) is set to avoid unnecessary operation during shorter voltage deviations from the target value, and in order to coordinate with other automatic voltage controllers in the system.

TCMYLTC and TCLYLTC (84)are an interface between the Automatic voltage control for tap changer, TR1ATCC (90) or TR8ATCC (90) and the transformer load tap changer itself. More specifically this means that it gives command-pulses to a power transformer motor driven load tap changer and that it receives information from the load tap changer regarding tap position, progress of given commands, and so on.

TCMYLTC and TCLYLTC (84) also serve the purpose of giving information about tap position to the transformer differential protection.

Control location local/remote

The tap changer can be operated from the front of the IED or from a remote place alternatively. On the IED front there is a local remote switch that can be used to select the operator place. For this functionality the Apparatus control function blocks Bay control (QCBAY), Local remote (LOCREM) and Local remote control (LOCREMCTRL) are used.

Information about the control location is given to TR1ATCC (90) or TR8ATCC (90) function through connection of the Permitted Source to Operate (PSTO) output of the QCBAY function block to the input PSTO of the TR1ATCC (90) or TR8ATCC (90) function block.

Control Mode

The control mode of the automatic voltage control for tap changer function, TR1ATCC (90) for single control and TR8ATCC (90) for parallel control can be:

- Manual
- Automatic

The control mode can be changed from the local location via the command menu on the local HMI under **Main menu/Control/Commands/ TransformerVoltageControl(ATCC,90)/TR1ATCC:x/TR8ATCC:x**, or changed

from a remote location via binary signals connected to the MANCTRL, AUTOCTRL inputs on TR1ATCC (90) or TR8ATCC (90) function block.

Measured Quantities

In normal applications, the LV side of the transformer is used as the voltage measuring point. If necessary, the LV side current is used as load current to calculate the line-voltage drop to the regulation point.

Automatic voltage control for tap changer, TR1ATCC (90) for single control and TR8ATCC (90) for parallel control function block has three inputs I3P1, I3P2 and V3P2 corresponding to HV-current, LV-current and LV-voltage respectively. These analog quantities are fed to the IED via the transformer input module, the Analog to Digital Converter and thereafter a Pre-Processing Block. In the Pre-Processing Block, a great number of quantities for example, phase-to-phase analog values, sequence values, max value in a three phase group etc., are derived. The different function blocks in the IED are then “subscribing” on selected quantities from the pre-processing blocks. In case of TR1ATCC (90) or TR8ATCC (90), there are the following possibilities:

- I3P1 represents a three-phase group of phase current with the highest current in any of the three phases considered. As only the highest of the phase current is considered, it is also possible to use one single-phase current as well as two-phase currents. In these cases, the currents that are not used will be zero.
- For I3P2 and V3P2 the setting alternatives are: any individual phase current/voltage, as well as any combination of phase-phase current/voltage or the positive sequence current/voltage. Thus, single-phase as well as, phase-phase or three-phase feeding on the LV-side is possible but it is commonly selected for current and voltage.

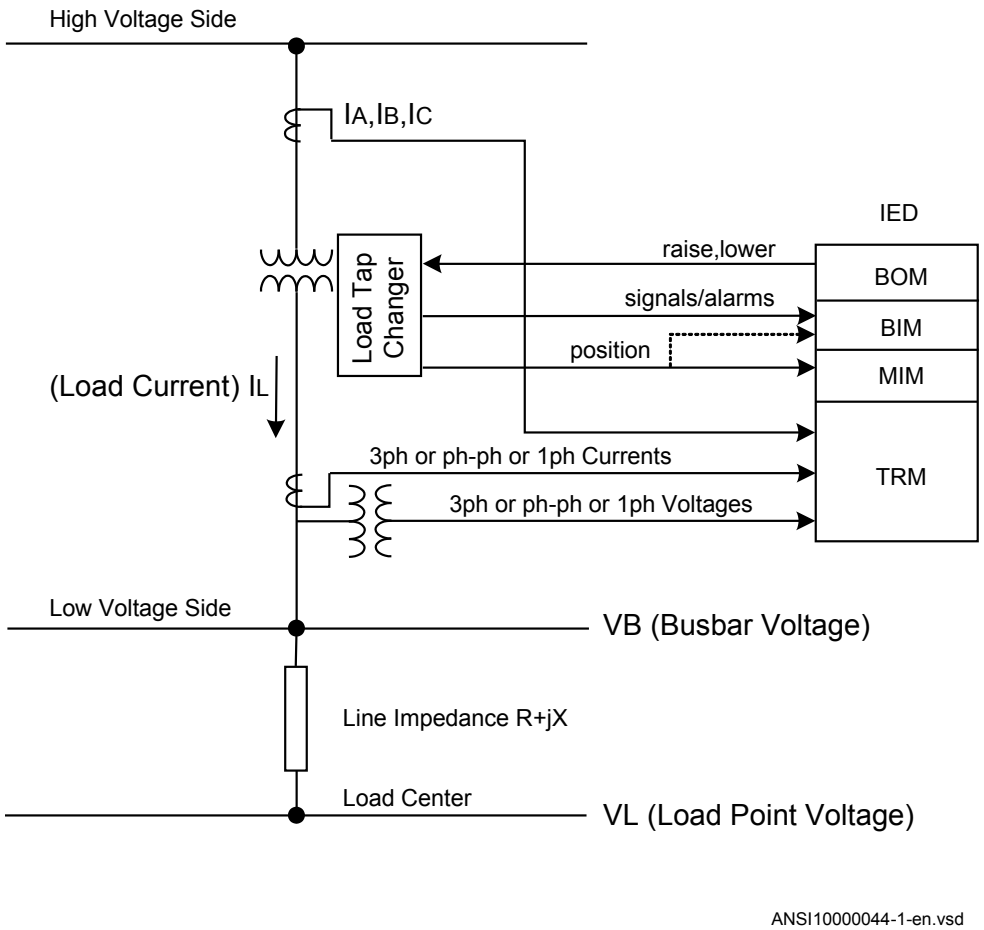

Figure 110: Signal flow for a single transformer with voltage control

On the HV side, the three-phase current is normally required in order to feed the three-phase over current protection that blocks the load tap changer in case of over-current above harmful levels.

The voltage measurement on the LV-side can be made single phase-ground. However, it shall be remembered that this can only be used in solidly grounded systems, as the measured phase-ground voltage can increase with as much as a factor √3 in case of ground faults in a non-solidly grounded system.

The analog input signals are normally common with other functions in the IED for example, protection functions.

The LV-busbar voltage is designated VB, the load current I_L and load point voltage V_L.

Automatic voltage control for a single transformer

Automatic voltage control for tap changer, single control TR1ATCC (90) measures the magnitude of the busbar voltage VB. If no other additional features are enabled (line voltage drop compensation), this voltage is further used for voltage regulation.

TR1ATCC (90) then compares this voltage with the set voltage, *VSet* and decides which action should be taken. To avoid unnecessary switching around the setpoint, a deadband (degree of insensitivity) is introduced. The deadband is symmetrical around *VSet*, see figure 111, and it is arranged in such a way that there is an outer and an inner deadband. Measured voltages outside the outer deadband start the timer to initiate tap commands, whilst the sequence resets when the measured voltage is once again back inside the inner deadband. One half of the outer deadband is denoted ΔV. The setting of ΔV, setting *Vdeadband* should be set to a value near to the power transformer's tap changer voltage step (typically 75–125% of the tap changer step).

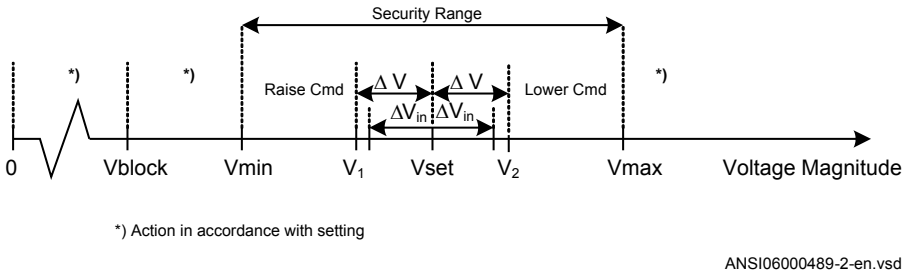

Figure 111: Control actions on a voltage scale

During normal operating conditions the busbar voltage VB, stays within the outer deadband (interval between V1 and V2 in figure 111). In that case no actions will be taken by TR1ATCC (90). However, if VB becomes smaller than V1, or greater than V2, an appropriate raise or lower timer will start. The timer will run as long as the measured voltage stays outside the inner deadband. If this condition persists longer than the preset time delay, TR1ATCC (90) will initiate that the appropriate VLOWER or VRAISE command will be sent from Tap changer control and supervision, 6 binary inputs TCMYLTC, 84), or 32 binary inputs TCLYLTC (84) to the transformer load tap changer. If necessary, the procedure will be repeated until the magnitude of the busbar voltage again falls within the inner deadband. One half of the inner deadband is denoted ΔV_{in}. The inner deadband ΔV_{in}, setting *VDeadbandInner* should be set to a value smaller than ΔV. It is recommended to set the inner deadband to 25-70% of the ΔV value.

This way of working is used by TR1ATCC (90) while the busbar voltage is within the security range defined by settings *Vmin* and *Vmax*.

A situation where VB falls outside this range will be regarded as an abnormal situation.

When V_B falls below setting *Vblock*, or alternatively, falls below setting *Vmin* but still above *Vblock*, or rises above *Vmax*, actions will be taken in accordance with settings for blocking conditions (refer to table 30).

If the busbar voltage rises above *Vmax*, TR1ATCC (90) can initiate one or more fast step down commands (VLOWER commands) in order to bring the voltage back into the security range (settings *Vmin*, and *Vmax*). The fast step down function operation can be set in one of the following three ways: off /auto/auto and manual, according to the setting *FSDMode*. The VLOWER command, in fast step down mode, is issued with the settable time delay *tFSD*.

The measured RMS magnitude of the busbar voltage V_B is shown on the local HMI as value BUSVOLT under **Main menu/Test/Function status/Control/ TransformerVoltageControl(ATCC,90)/TR1ATCC:x/TR8ATCC:x**.

Time characteristic

The time characteristic defines the time that elapses between the moment when measured voltage exceeds the deadband interval until the appropriate VRAISE or VLOWER command is initiated.

The purpose of the time delay is to prevent unnecessary load tap changer operations caused by temporary voltage fluctuations and to coordinate load tap changer operations in radial networks in order to limit the number of load tap changer operations. This can be done by setting a longer time delay closer to the consumer and shorter time delays higher up in the system.

The first time delay, *t1*, is used as a time delay (usually long delay) for the first command in one direction. It can have a definite or inverse time characteristic, according to the setting *t1Use* (Constant/Inverse). For inverse time characteristics larger voltage deviations from the *VSet* value will result in shorter time delays, limited by the shortest time delay equal to the *tMin* setting. This setting should be coordinated with the tap changer mechanism operation time.

Constant (definite) time delay is independent of the voltage deviation.

The inverse time characteristic for the first time delay follows the formulas:

$$DA = \left| VB - VSet \right|$$

(Equation 118)

$$D = \frac{DA}{\Delta V}$$

(Equation 119)

$$tMin = \frac{t_1}{D}$$

(Equation 120)

Where:

DA absolute voltage deviation from the set point

D relative voltage deviation in respect to set deadband value

For the last equation, the condition *t1* > *tMin* shall also be fulfilled. This practically means that *tMin* will be equal to the set *t1* value when absolute voltage deviation DA is equal to ΔV (relative voltage deviation D is equal to 1). For other values see figure 112. It should be noted that operating times, shown in the figure 112 are for 30, 60, 90, 120, 150 & 180 seconds settings for *t1* and 10 seconds for *tMin*.

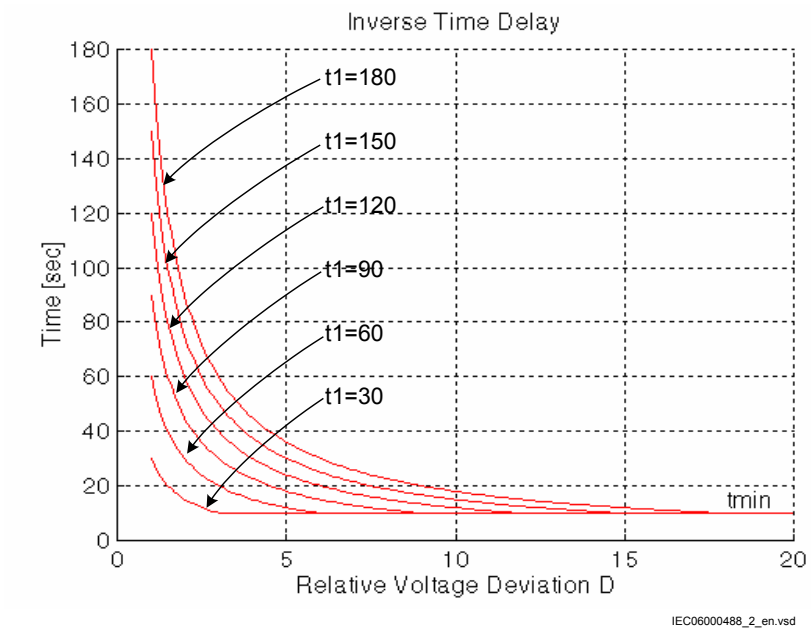

Figure 112: Inverse time characteristic for TR1ATCC (90) and TR8ATCC (90)

The second time delay, *t2*, will be used for consecutive commands (commands in the same direction as the first command). It can have a definite or inverse time characteristic according to the setting *t2Use* (Constant/Inverse). Inverse time characteristic for the second time delay follows the similar formulas as for the first time delay, but the *t2* setting is used instead of *t1*.

Line voltage drop

The purpose with the line voltage drop compensation is to control the voltage, not at the power transformer low voltage side, but at a point closer to the load point.

Figure 113 shows the vector diagram for a line modelled as a series impedance with the voltage V_B at the LV busbar and voltage V_L at the load center. The load current on the line is I_L, the line resistance and reactance from the station busbar to the load point are R_L and X_L. The angle between the busbar voltage and the current, is φ. If all these parameters are known V_L can be obtained by simple vector calculation.

Values for R_L and X_L are given as settings in primary system ohms. If more than one line is connected to the LV busbar, an equivalent impedance should be calculated and given as a parameter setting.

The line voltage drop compensation function can be turned *Enabled*/*Disabled* by the setting parameter *OperationLDC*. When it is enabled, the voltage V_L will be used by the Automatic voltage control for tap changer function, TR1ATCC (90) for single control and TR8ATCC (90) for parallel control for voltage regulation instead of V_B. However, TR1ATCC (90) or TR8ATCC (90) will still perform the following two checks:

1. The magnitude of the measured busbar voltageV_B, shall be within the security range, (setting *Vmin* and *Vmax*). If the busbar voltage falls-out of this range the line voltage drop compensation calculations will be temporarily stopped until the voltage V_B comes back within the range.
2. The magnitude of the calculated voltage V_L at the load point, can be limited such that it is only allowed to be equal to or smaller than the magnitude of V_B, otherwise V_B will be used. However, a situation where $V_L>V_B$ can be caused by a capacitive load condition, and if the wish is to allow for a situation like that, the limitation can be removed by setting the parameter *OperCapaLDC* to *Enabled*.

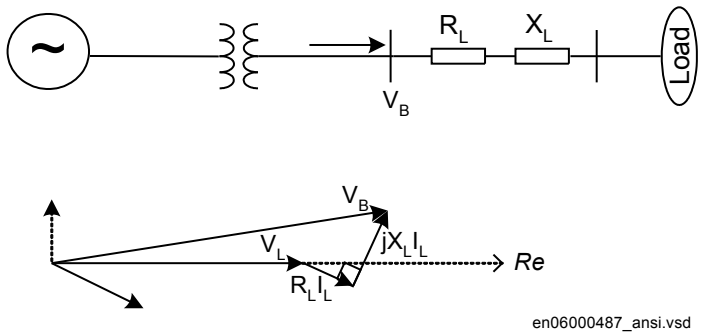

Figure 113: Vector diagram for line voltage drop compensation

The calculated load voltage V_L is shown on the local HMI as value ULOAD under **Main menu/Test/Function status/Control/TransformerVoltageControl(ATCC,90)/ TR1ATCC:x/TR8ATCC:x**.

Load voltage adjustment

Due to the fact that most loads are proportional to the square of the voltage, it is possible to provide a way to shed part of the load by decreasing the supply voltage a couple of percent. During high load conditions, the voltage drop might be considerable and there might be reasons to increase the supply voltage to keep up the power quality and customer satisfaction.

It is possible to do this voltage adjustment in two different ways in Automatic voltage control for tap changer, single control TR1ATCC (90) and parallel control TR8ATCC (90):

1. Automatic load voltage adjustment, proportional to the load current.
2. Constant load voltage adjustment with four different preset values.

In the first case the voltage adjustment is dependent on the load and maximum voltage adjustment should be obtained at rated load of the transformer.

In the second case, a voltage adjustment of the set point voltage can be made in four discrete steps (positive or negative) activated with binary signals connected to TR1ATCC (90) or TR8ATCC (90) function block inputs LVA1, LVA2, LVA3 and LVA4. The corresponding voltage adjustment factors are given as setting parameters *LVAConst1*, *LVAConst2*, *LVAConst3* and *LVAConst4*. The inputs are activated with a pulse, and the latest activation of anyone of the four inputs is valid. Activation of the input LVARESET in TR1ATCC (90) or TR8ATCC (90) block, brings the voltage setpoint back to *Vset*.

With these factors, TR1ATCC (90) or TR8ATCC (90) adjusts the value of the set voltage *Vset* according to the following formula:

$$Vsetadjust = Vset + S_a \cdot \frac{I_L}{I2Base} + S_{ci}$$

(Equation 121)

$V_{set,\ adjust}$	Adjusted set voltage in per unit
VSet	Original set voltage: Base quality is V_{n2}
S_a	Automatic load voltage adjustment factor, setting *VRAuto*
I_L	Load current
I2Base	Rated current, LV winding
S_{ci}	Constant load voltage adjust. factor for active input *i* (corresponding to *LVAConst1, LVAConst2, LVAConst3 and LVAConst4*)

It shall be noted that the adjustment factor is negative in order to decrease the load voltage and positive in order to increase the load voltage. After this calculation $V_{set, adjust}$ will be used by TR1ATCC (90) or TR8ATCC (90) for voltage regulation instead of the original value *Vset*. The calculated set point voltage $V_{set, adjust}$ is shown on the local HMI as a service value under **Main menu/Test/Function status/Control/ TransformerVoltageControl(ATCC,90)/TR1ATCC:x/TR8ATCC:x**.

Automatic control of parallel transformers

Control of parallel transformers means control of two or more power transformers connected to the same busbar on the LV side and in most cases also on the HV side. Special measures must be taken in order to avoid a runaway situation where the tap changers on the parallel transformers gradually diverge and end up in opposite end positions.

Three alternative methods can be used for parallel control with the Automatic voltage control for tap changer, single/parallel control TR8ATCC (90):

- master-follower method
- reverse reactance method
- circulating current method

In order to realize the need for special measures to be taken when controlling transformers in parallel, consider first two parallel transformers which are supposed to be equal with similar tap changers. If they would each be in automatic voltage control for single transformer that is, each of them regulating the voltage on the LV busbar individually without any further measures taken, then the following could happen. Assuming for instance that they start out on the same tap position and that the LV busbar voltage V_B is within *VSet* ± ΔV, then a gradual increase or decrease in the load would at some stage make V_B fall outside *VSet* ± ΔV and a raise or lower command would be initiated. However, the rate of change of voltage would normally be slow, which would make one tap changer act before the other. This is unavoidable and is due to small inequalities in measurement and so on. The one tap changer that responds first on a low voltage condition with a raise command will be prone to always do so, and vice versa. The situation could thus develop such that, for example T1 responds first to a low busbar voltage with a raise command and thereby restores the voltage. When the busbar voltage thereafter at a later stage gets high, T2 could respond with a lower command and thereby again restore the busbar voltage to be within the inner deadband. However, this has now caused the load tap changer for the two transformers to be 2 tap positions apart, which in turn causes an increasing circulating current. This course of events will then repeat with T1 initiating raise commands and T2 initiating lower commands in order to keep the busbar voltage within *VSet* ± ΔV, but at the same time it will drive the two tap changers to their opposite end positions. High circulating currents and loss of control would be the result of this runaway tap situation.

Parallel control with the master-follower method

In the master-follower method, one of the transformers is selected to be master, and will regulate the voltage in accordance with the principles for Automatic voltage control. Selection of the master is made by activating the binary input FORCMAST in TR8ATCC (90) function block for one of the transformers in the group.

The followers can act in two alternative ways depending on the setting of the parameter *MFMode*. When this setting is *Follow Cmd*, raise and lower commands (VRAISE and VLOWER) generated by the master, will initiate the corresponding command in all follower TR8ATCCs (90) simultaneously, and consequently they will blindly follow the master irrespective of their individual tap positions. Effectively this means that if the tap positions of the followers were harmonized with the master from the beginning, they would stay like that as long as all transformers in the parallel group continue to participate in the parallel control. On the other hand for example, one transformer is disconnected from the group and misses a one tap step operation, and thereafter is reconnected to the group again, it will thereafter participate in the regulation but with a one tap position offset.

If the parameter *MFMode* is set to *Follow Tap*, then the followers will read the tap position of the master and adopt to the same tap position or to a tap position with an offset relative to the master, and given by setting parameter *TapPosOffs* (positive or negative integer value). The setting parameter *tAutoMSF* introduces a time delay on VRAISE/VLOWER commands individually for each follower when setting *MFMode* has the value *Follow Tap*.

Selecting a master is made by activating the input FORCMAST in TR8ATCC (90) function block. Deselecting a master is made by activating the input RSTMAST. These two inputs are pulse activated, and the most recent activation is valid that is, an activation of any of these two inputs overrides previous activations. If none of these inputs has been activated, the default is that the transformer acts as a follower (given of course that the settings are parallel control with the master follower method).

When the selection of master or follower in parallel control, or automatic control in single mode, is made with a three position switch in the substation, an arrangement as in figure 114 below is arranged with application configuration.

Figure 114: Principle for a three-position switch Master/Follower/Single

Parallel control with the reverse reactance method

Consider Figure 115 with two parallel transformers with equal rated data and similar tap changers. The tap positions will diverge and finally end up in a runaway tap situation if no measures to avoid this are taken.

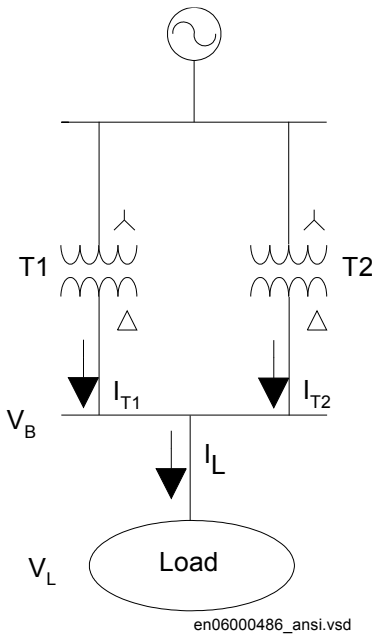

Figure 115: Parallel transformers with equal rated data.

In the reverse reactance method, the line voltage drop compensation is used. The original of the line voltage drop compensation function purpose is to control the voltage at a load point further out in the network. The very same function can also be used here to control the voltage at a load point inside the transformer, by choosing a negative value of the parameter *Xline*.

Figure 116, shows a vector diagram where the principle of reverse reactance has been introduced for the transformers in figure 115. The transformers are here supposed to be on the same tap position, and the busbar voltage is supposed to give a calculated compensated value V_L that coincides with the target voltage *VSet*.

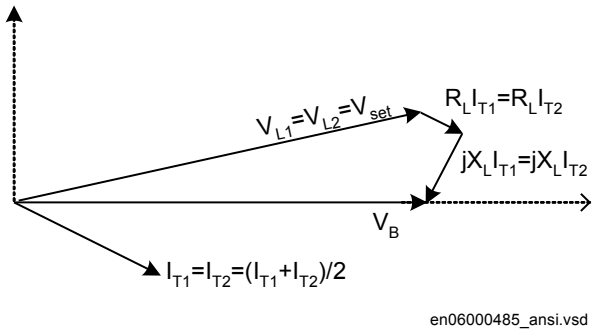

Figure 116: Vector diagram for two transformers regulated exactly on target voltage.

A comparison with figure 113 gives that the line voltage drop compensation for the purpose of reverse reactance control is made with a value with opposite sign on X_L, hence the designation “reverse reactance” or “negative reactance”. Effectively this means that, whereas the line voltage drop compensation in figure 113 gave a voltage drop along a line from the busbar voltage V_B to a load point voltage V_L, the line voltage drop compensation in figure 116 gives a voltage increase (actually, by adjusting the ratio X_L/R_L with respect to the power factor, the length of the vector V_L will be approximately equal to the length of V_B) from V_B up towards the transformer itself. Thus in principal the difference between the vector diagrams in figure 113 and figure 116 is the sign of the setting parameter X_L.

If now the tap position between the transformers will differ, a circulating current will appear, and the transformer with the highest tap (highest no load voltage) will be the source of this circulating current. Figure 117 below shows this situation with T1 being on a higher tap than T2.

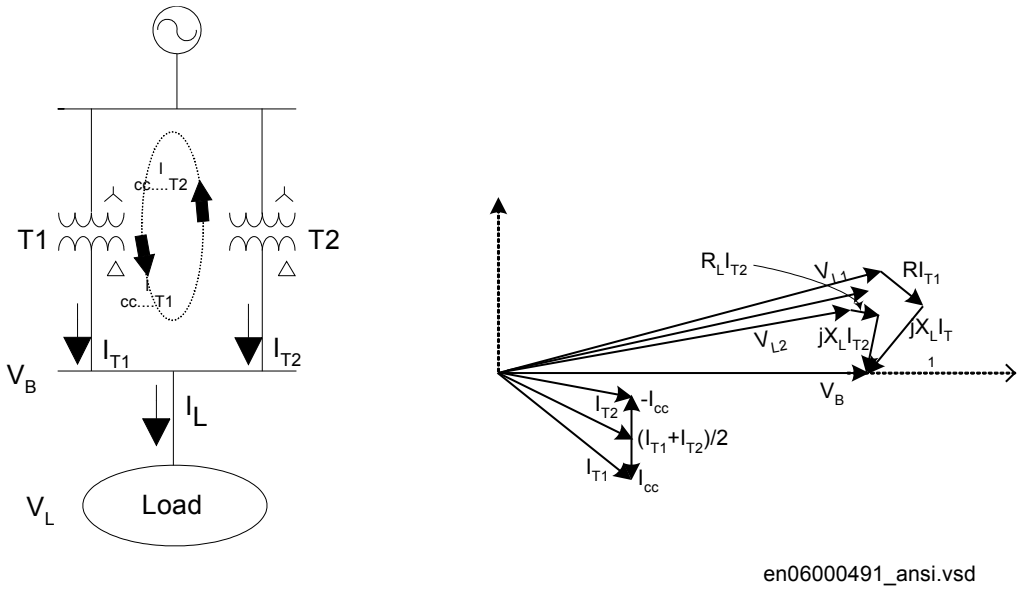

Figure 117: Circulating current caused by T1 on a higher tap than T2.

The circulating current I_{cc} is predominantly reactive due to the reactive nature of the transformers. The impact of I_{cc} on the individual transformer currents is that it increases the current in T1 (the transformer that is driving I_{cc}) and decreases it in T2 at the same time as it introduces contradictive phase shifts, as can be seen in figure 117. The result is thus, that the line voltage drop compensation calculated voltage V_L for T1 will be higher than the line voltage drop compensation calculated voltage V_L for T2, or in other words, the transformer with the higher tap position will have the higher V_L value and the transformer with the lower tap position will have the lower V_L value. Consequently, when the busbar voltage increases, T1 will be the one to tap down, and when the busbar voltage decreases, T2 will be the one to tap up. The overall performance will then be that the runaway tap situation will be avoided and that the circulating current will be minimized.

Parallel control with the circulating current method

Two transformers with different turns ratio, connected to the same busbar on the HV-side, will apparently show different LV-side voltage. If they are now connected to the same LV busbar but remain unloaded, this difference in no-load voltage will cause a circulating current to flow through the transformers. When load is put on the transformers, the circulating current will remain the same, but now it will be superimposed on the load current in each transformer. Voltage control of parallel transformers with the circulating current method means minimizing of the circulating current at a given voltage target value, thereby achieving:

1. that the busbar or load voltage is regulated to a preset target value
2. that the load is shared between parallel transformers in proportion to their ohmic short circuit reactance

If the transformers have equal percentage impedance given in the respective transformer MVA base, the load will be divided in direct proportion to the rated power of the transformers when the circulating current is minimized.

This method requires extensive exchange of data between the TR8ATCC (90) function blocks (one TR8ATCC (90) function for each transformer in the parallel group). TR8ATCC (90) function block can either be located in the same IED, where they are configured in PCM600 to co-operate, or in different IEDs. If the functions are located in different IEDs they must communicate via GOOSE interbay communication on the IEC 61850 communication protocol. Complete exchange of TR8ATCC (90) data, analog as well as binary, via GOOSE is made cyclically every 300 ms.

The busbar voltage V_B is measured individually for each transformer in the parallel group by its associated TR8ATCC (90) function. These measured values will then be exchanged between the transformers, and in each TR8ATCC (90) block, the mean value of all V_B values will be calculated. The resulting value V_{Bmean} will then be used in each IED instead of V_B for the voltage regulation, thus assuring that the same value is used by all TR8ATCC functions, and thereby avoiding that one erroneous measurement in one transformer could upset the voltage regulation. At the same time, supervision of the VT mismatch is also performed. This works such that, if a measured voltage V_B, differs from V_{Bmean} with more than a preset value (setting parameter *VTmismatch*) and for more than a pre set time (setting parameter *tVTmismatch*) an alarm signal VTALARM will be generated.

The calculated mean busbar voltage V_{Bmean} is shown on the local HMI as a service value BusVolt under **Main menu/Test/Function status/Control/ TransformerVoltageControl(ATCC,90)/TR8ATCC:x**.

Measured current values for the individual transformers must be communicated between the participating TR8ATCC (90) functions, in order to calculate the circulating current.

The calculated circulating current I_{cc_i} for transformer “i” is shown on the HMI as a service value ICIRCUL under **Main menu/Test/Function status/Control/ TransformerVoltageControl(ATCC,90)/TR8ATCC:x**.

When the circulating current is known, it is possible to calculate a no-load voltage for each transformer in the parallel group. To do that the magnitude of the circulating current in each bay, is first converted to a voltage deviation, V_{di}, with equation 122:

$$V_{di} = C_i \cdot I_{cc\_i} \cdot X_i$$

(Equation 122)

where X_i is the short-circuit reactance for transformer i and C_i, is a setting parameter named *Comp* which serves the purpose of alternatively increasing or decreasing the impact of the circulating current in TR8ATCC control calculations. It should be noted that V_{di} will have positive values for transformers that produce circulating currents and negative values for transformers that receive circulating currents.

Now the magnitude of the no-load voltage for each transformer can be approximated with:

$$V_i = V_{Bmean} + V_{di}$$

(Equation 123)

This value for the no-load voltage is then simply put into the voltage control function for single transformer. There it is treated as the measured busbar voltage, and further control actions are taken as described previously in section "Automatic voltage control for a single transformer". By doing this, the overall control strategy can be summarized as follows.

For the transformer producing/receiving the circulating current, the calculated no-load voltage will be greater/smaller than the measured voltage V_{Bmean}. The calculated no-load voltage will then be compared with the set voltage *VSet*. A steady deviation which is outside the outer deadband will result in VLOWER or VRAISE being initiated alternatively. In this way the overall control action will always be correct since the position of a tap changer is directly proportional to the transformer no-load voltage. The sequence resets when V_{Bmean} is inside the inner deadband at the same time as the calculated no-load voltages for all transformers in the parallel group are inside the outer deadband.

In parallel operation with the circulating current method, different *VSet* values for individual transformers can cause the voltage regulation to be unstable. For this reason, the mean value of *VSet* for parallel operating transformers can be automatically calculated and used for the voltage regulation. This is set *Enabled*/*Disabled* by setting parameter *OperUsetPar*. The calculated mean *VSet* value is shown on the local HMI as a service value USETPAR under **Main menu/Test/Function status/Control/ TransformerVoltageControl(ATCC,90)/TR8ATCC:x**.

The use of mean *VSet* is recommended for parallel operation with the circulating current method, especially in cases when Load Voltage Adjustment is also used.

Line voltage drop compensation for parallel control

The line voltage drop compensation for a single transformer is described in section "Line voltage drop". The same principle is used for parallel control with the circulating current method and with the master – follower method, except that the total load current, I_L, is used in the calculation instead of the individual transformer current. (See figure 113 for details). The same values for the parameters *Rline* and *Xline* shall be set in all IEDs in the

same parallel group. There is no automatic change of these parameters due to changes in the substation topology, thus they should be changed manually if needed.

Avoidance of simultaneous tapping

Avoidance of simultaneous tapping (operation with the circulating current method)

For some types of tap changers, especially older designs, an unexpected interruption of the auxiliary voltage in the middle of a tap manoeuvre, can jam the tap changer. In order not to expose more than one tap changer at a time, simultaneous tapping of parallel transformers (regulated with the circulating current method) can be avoided. This is done by setting parameter *OperSimTap* to *On*. Simultaneous tapping is then avoided at the same time as tapping actions (in the long term) are distributed evenly amongst the parallel transformers.

The algorithm in Automatic voltage control for tap changer, parallel control TR8ATCC (90) will select the transformer with the greatest voltage deviation V_{di} to tap first. That transformer will then start timing, and after time delay *t1* the appropriate VRAISE or VLOWER command will be initiated. If now further tapping is required to bring the busbar voltage inside *VDeadbandInner*, the process will be repeated, and the transformer with the then greatest value of V_{di} amongst the remaining transformers in the group will tap after a further time delay *t2*, and so on. This is made possible as the calculation of I_{cc} is cyclically updated with the most recent measured values. If two transformers have equal magnitude of V_{di} then there is a predetermined order governing which one is going to tap first.

Avoidance of simultaneous tapping (operation with the master follower method)

A time delay for the follower in relation to the command given from the master can be set when the setting *MFMode* is *Follow Tap* that is, when the follower follows the tap position (with or without an offset) of the master. The setting parameter *tAutoMSF* then introduces a time delay on VRAISE/VLOWER commands individually for each follower, and effectively this can be used to avoid simultaneous tapping.

Homing

Homing (operation with the circulating current method)

This function can be used with parallel operation of power transformers using the circulating current method. It makes possible to keep a transformer energized from the HV side, but open on the LV side (hot stand-by), to follow the voltage regulation of loaded parallel transformers, and thus be on a proper tap position when the LV circuit breaker closes.

For this function, it is needed to have the LV VTs for each transformer on the cable (tail) side (not the busbar side) of the CB, and to have the LV CB position hardwired to the IED.

In TR8ATCC block for one transformer, the state "Homing" will be defined as the situation when the transformer has information that it belongs to a parallel group (for example, information on T1INCLD=1 or T2INCLD=1 ... and so on), at the same time as the binary input DISC on TR8ATCC block is activated by open LV CB. If now the setting parameter *OperHoming = Enabled* for that transformer, TR8ATCC will act in the following way:

- The algorithm calculates the “true” busbar voltage, by averaging the voltage measurements of the other transformers included in the parallel group (voltage measurement of the “disconnected transformer” itself is not considered in the calculation).
- The value of this true busbar voltage is used in the same way as V_{set} for control of a single transformer. The “disconnected transformer” will then automatically initiate VRAISE or VLOWER commands (with appropriate *t1* or *t2* time delay) in order to keep the LV side of the transformer within the deadband of the busbar voltage.

Homing (operation with the master follower method)

If one (or more) follower has its LV circuit breaker open and its HV circuit breaker closed, and if *OperHoming = Enabled*, this follower continues to follow the master just as it would have made with the LV circuit breaker closed. On the other hand, if the LV circuit breaker of the master opens, automatic control will be blocked and TR8ATCC function output MFERR will be activated as the system will not have a master.

Adapt mode, manual control of a parallel group

Adapt mode (operation with the circulating current method)

When the circulating current method is used, it is also possible to manually control the transformers as a group. To achieve this, the setting *OperationAdapt* must be set *Enabled*, then the control mode for one TR8ATCC (90) shall be set to “Manual” via the binary input MANCTRL or the local HMI under **Main menu/Control/Commands/ TransformerVoltageControl(ATCC,90)/TR8ATCC:x** whereas the other TR8ATCCs (90) are left in “Automatic”. TR8ATCCs (90) in automatic mode will then observe that one transformer in the parallel group is in manual mode and will then automatically be set in adapt mode. As the name indicates they will adapt to the manual tapping of the transformer that has been put in manual mode.

TR8ATCC (90) in adapt mode will continue the calculation of V_{di}, but instead of adding V_{di} to the measured busbar voltage, it will compare it with the deadband ΔV. The following control rules are used:

1. If V_{di} is positive and its modulus is greater than ΔV, then initiate an VLOWER command. Tapping will then take place after appropriate *t1/t2* timing.
2. If V_{di} is negative and its modulus is greater than ΔV, then initiate an VRAISE command. Tapping will then take place after appropriate *t1/t2* timing.
3. If V_{di} modulus is smaller than ΔV, then do nothing.

The binary output signal ADAPT on the TR8ATCC (90) function block will be activated to indicate that this TR8ATCC (90) is adapting to another TR8ATCC (90) in the parallel group.

It shall be noted that control with adapt mode works as described under the condition that only one transformer in the parallel group is set to manual mode via the binary input MANCTRL or, the local HMI **Main menu/Control/Commands/ TransformerVoltageControl(ATCC,90)/TR8ATCC:x**.

In order to operate each tap changer individually when the circulating current method is used, the operator must set each TR8ATCC (90) in the parallel group, in manual.

Adapt mode (operation with the master follower method)

When in master follower mode, the adapt situation occurs when the setting *OperationAdapt* is *Enabled*, and the master is put in manual control with the followers still in parallel master-follower control. In this situation the followers will continue to follow the master the same way as when it is in automatic control.

If one follower in a master follower parallel group is put in manual mode, still with the setting *OperationAdaptEnabled*, the rest of the group will continue in automatic master follower control. The follower in manual mode will of course disregard any possible tapping of the master. However, as one transformer in the parallel group is now exempted from the parallel control, the binary output signal ADAPT on TR8ATCC (90) function block will be activated for the rest of the parallel group.

Plant with capacitive shunt compensation (for operation with the circulating current method)

If significant capacitive shunt generation is connected in a substation and it is not symmetrically connected to all transformers in a parallel group, the situation may require compensation of the capacitive current to the ATCC.

An asymmetric connection will exist if for example, the capacitor is situated on the LV-side of a transformer, between the CT measuring point and the power transformer or at a tertiary winding of the power transformer, see figure 118. In a situation like this, the capacitive current will interact in opposite way in the different ATCCs with regard to the calculation of circulating currents. The capacitive current is part of the imaginary load current and therefore essential in the calculation. The calculated circulating current and the real circulating currents will in this case not be the same, and they will not reach a minimum at the same time. This might result in a situation when minimizing of the

calculated circulating current will not regulate the tap changers to the same tap positions even if the power transformers are equal.

However if the capacitive current is also considered in the calculation of the circulating current, then the influence can be compensated for.

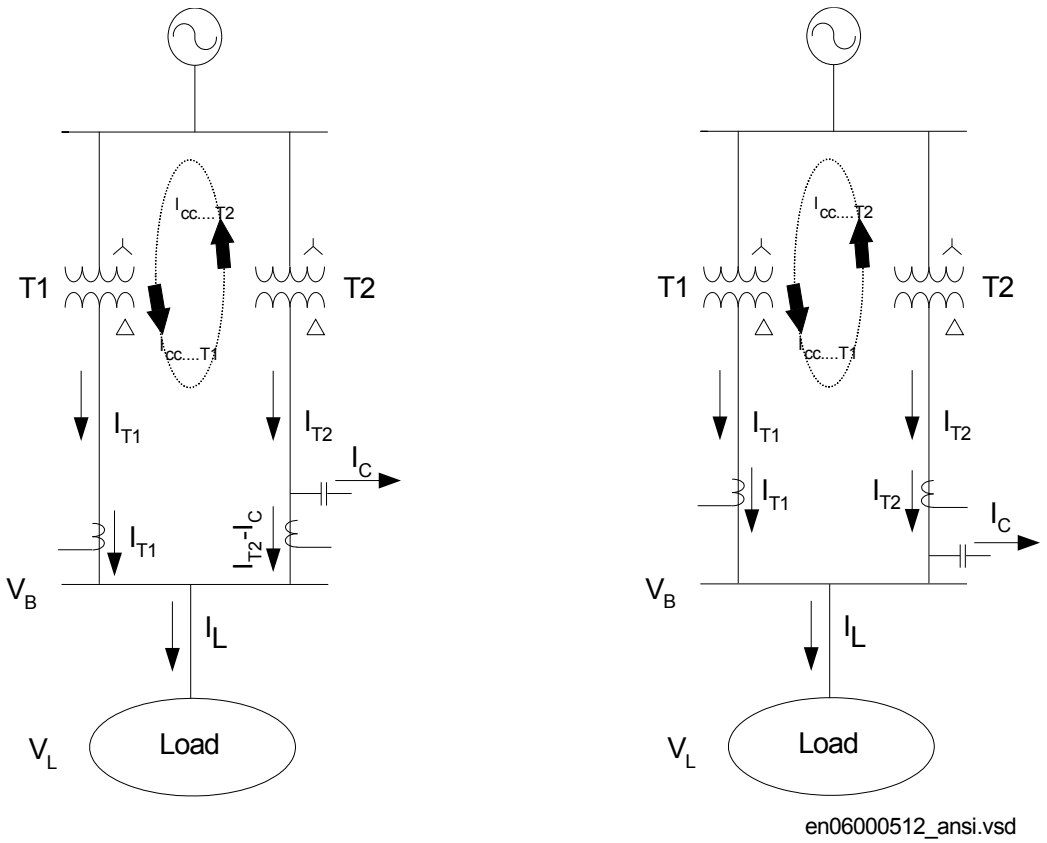

Figure 118: Capacitor bank on the LV-side

From figure 118 it is obvious that the two different connections of the capacitor banks are completely the same regarding the currents in the primary network. However the CT measured currents for the transformers would be different. The capacitor bank current may flow entirely to the load on the LV side, or it may be divided between the LV and the HV side. In the latter case, the part of I_C that goes to the HV side will divide between the two transformers and it will be measured with opposite direction for T2 and T1. This in turn would be misinterpreted as a circulating current, and would upset a correct calculation of I_{cc}. Thus, if the actual connection is as in the left figure the capacitive current I_C needs to be compensated for regardless of the operating conditions and in

ATCC this is made numerically. The reactive power of the capacitor bank is given as a setting Q1, which makes it possible to calculate the reactive capacitance:

$$X_C = \frac{V^2}{Q1}$$

(Equation 124)

Thereafter the current I_C at the actual measured voltage VB can be calculated as:

$$I_C = \frac{V_B}{\sqrt{3} \cdot X_C}$$

(Equation 125)

In this way the measured LV currents can be adjusted so that the capacitor bank current will not influence the calculation of the circulating current.

Three independent capacitor bank values Q1, Q2 and Q3 can be set for each transformer in order to make possible switching of three steps in a capacitor bank in one bay.

Power monitoring

The level (with sign) of active and reactive power flow through the transformer, can be monitored. This function can be utilized for different purposes for example, to block the voltage control function when active power is flowing from the LV side to the HV side or to initiate switching of reactive power compensation plant, and so on.

There are four setting parameters *P*>, *P*<, *Q*> and *Q*< with associated outputs in TR8ATCC (90) and TR1ATCC (90) function blocks PGTFWD, PLTREV, QGTFWD and QLTREV. When passing the pre-set value, the associated output will be activated after the common time delay setting *tPower*.

The definition of direction of the power is such that the active power P is forward when power flows from the HV-side to the LV-side as shown in figure 119. The reactive power Q is forward when the total load on the LV side is inductive (reactance) as shown in figure 119.

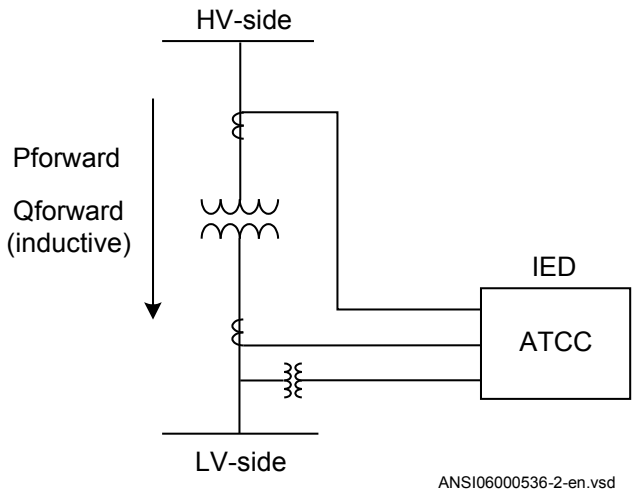

Figure 119: Power direction references

With the four outputs in the function block available, it is possible to do more than just supervise a level of power flow in one direction. By combining the outputs with logical elements in application configuration, it is also possible to cover for example, intervals as well as areas in the P-Q plane.

Busbar topology logic

Information of the busbar topology that is, position of circuit breakers and isolators, yielding which transformers that are connected to which busbar and which busbars that are connected to each other, is vital for the Automatic voltage control for tap changer, parallel control function TR8ATCC (90) when the circulating current or the master-follower method is used. This information tells each TR8ATCC (90), which transformers that it has to consider in the parallel control.

In a simple case, when only the switchgear in the transformer bays needs to be considered, there is a built-in function in TR8ATCC (90) block that can provide information on whether a transformer is connected to the parallel group or not. This is made by connecting the transformer CB auxiliary contact status to TR8ATCC (90) function block input DISC, which can be made via a binary input, or via GOOSE from another IED in the substation. When the transformer CB is open, this activates that input which in turn will make a corresponding signal DISC=1 in TR8ATCC (90) data set. This data set is the same data package as the package that contains all TR8ATCC (90) data transmitted to the other transformers in the parallel group (see section "Exchange of information between TR8ATCC functions" for more details). Figure 120 shows an example where T3 is disconnected which will lead to T3 sending the DISC=1 signal to the other two parallel TR8ATCC (90) modules (T1 and T2) in the group. Also see table 29.

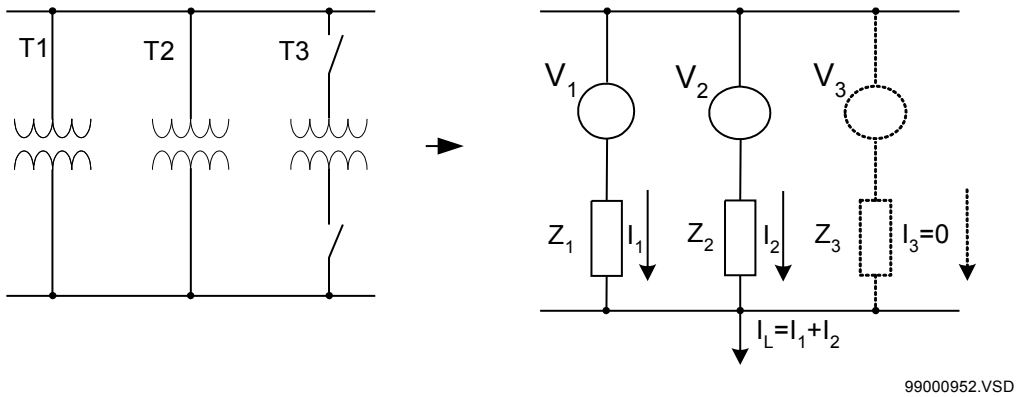

Figure 120: Disconnection of one transformer in a parallel group

When the busbar arrangement is more complicated with more buses and bus couplers/bus sections, it is necessary to engineer a specific station topology logic. This logic can be built in the application configuration in PCM600 and will keep record on which transformers that are in parallel (in one or more parallel groups). In each TR8ATCC (90) function block there are eight binary inputs (T1INCLD,..., T8INCLD) that will be activated from the logic depending on which transformers that are in parallel with the transformer to whom the TR8ATCC (90) function block belongs.

TR8ATCC (90) function block is also fitted with eight outputs (T1PG,..., T8PG) for indication of the actual composition of the parallel group that it itself is part of. If parallel operation mode has been selected in the IED with setting *TrfId = Tx*, then the TxPG signal will always be set to 1. The parallel function will consider communication messages only from the voltage control functions working in parallel (according to the current station configuration). When the parallel voltage control function detects that no other transformers work in parallel it will behave as a single voltage control function in automatic mode.

Exchange of information between TR8ATCC functions

Each transformer in a parallel group needs an Automatic voltage control for tap changer, parallel control TR8ATCC (90) function block of its own for the parallel voltage control. Communication between these TR8ATCCs (90) is made either on the GOOSE interbay communication on the IEC 61850 protocol if TR8ATCC (90) functions reside in different IEDs, or alternatively configured internally in one IED if multiple instances of TR8ATCC (90) reside in the same IED. Complete exchange of TR8ATCC (90) data, analog as well as binary, on GOOSE is made cyclically every 300 ms.

TR8ATCC (90) function block has an output ATCCOUT. This output contains two sets of signals. One is the data set that needs to be transmitted to other TR8ATCC (90) blocks in the same parallel group, and the other is the data set that is transferred to the TCMYLTC or TCLYLTC (84) function block for the same transformer as TR8ATCC (90) block belongs to.

There are 10 binary signals and 6 analog signals in the data set that is transmitted from one TR8ATCC (90) block to the other TR8ATCC (90) blocks in the same parallel group:

Table 27: Binary signals

Signal	Explanation
TimerOn	This signal is activated by the transformer that has started its timer and is going to tap when the set time has expired.
automaticCTRL	Activated when the transformer is set in automatic control
mutualBlock	Activated when the automatic control is blocked
disc	Activated when the transformer is disconnected from the busbar
receiveStat	Signal used for the horizontal communication
TermIsForcedMaster	Activated when the transformer is selected Master in the master-follower parallel control mode
TermIsMaster	Activated for the transformer that is master in the master-follower parallel control mode
termReadyForMSF	Activated when the transformer is ready for master-follower parallel control mode
raiseVoltageOut	Order from the master to the followers to tap up
lowerVoltageOut	Order from the master to the followers to tap down

Table 28: Analog signals

Signal	Explanation
voltageBusbar	Measured busbar voltage for this transformer
ownLoadCurrim	Measured load current imaginary part for this transformer
ownLoadCurrre	Measured load current real part for this transformer
reacSec	Transformer reactance in primary ohms referred to the LV side
relativePosition	The transformer's actual tap position
voltage Setpoint	The transformer's set voltage (*VSet*) for automatic control

Manual configuration of VCTR GOOSE data set is required. Note that both data value attributes and quality attributes have to be mapped. The following data objects must be configured:

- BusV
- LodAIm
- LodARe
- PosRel
- SetV
- VCTRStatus
- X2

The transformers controlled in parallel with the circulating current method or the master-follower method must be assigned unique identities. These identities are entered as a setting in each TR8ATCC (90), and they are predefined as T1, T2, T3,..., T8 (transformers 1 to 8). In figure 120 there are three transformers with the parameter *TrfId* set to *T1, T2* and *T3*, respectively.

For parallel control with the circulating current method or the master-follower method alternatively, the same type of data set as described above, must be exchanged between two TR8ATCC (90). To achieve this, each TR8ATCC (90) is transmitting its own data set on the output ATCCOUT as previously mentioned. To receive data from the other transformers in the parallel group, the output ATCCOUT from each transformer must be connected (via GOOSE or internally in the application configuration) to the inputs HORIZx (x = identifier for the other transformers in the parallel group) on TR8ATCC (90) function block. Apart from this, there is also a setting in each TR8ATCC =/,..., =/ *T1RXOP=Off/On,..., T8RXOP=Off/ On*. This setting determines from which of the other transformer individuals that data shall be received. Settings in the three TR8ATCC blocks for the transformers in figure 120, would then be according to the table 29:

Table 29: Setting of TxRXOP

TrfId=T1	T1RXOP=Off	T2RXOP=On	T3RXOP=On	T4RXOP=Off	T5RXOP=Off	T6RXOP=Off	T7RXOP=Off	T8RXOP=Off
TrfId=T2	T1RXOP=On	T2RXOP=Off	T3RXOP=On	T4RXOP=Off	T5RXOP=Off	T6RXOP=Off	T7RXOP=Off	T8RXOP=Off
TrfId=T3	T1RXOP=On	T2RXOP=On	T3RXOP=Off	T4RXOP=Off	T5RXOP=Off	T6RXOP=Off	T7RXOP=Off	T8RXOP=Off

Observe that this parameter must be set to *Disabled* for the “own” transformer. (for transformer with identity T1 parameter *T1RXOP* must be set to *Disabled*, and so on.

Blocking

Blocking conditions

The purpose of blocking is to prevent the tap changer from operating under conditions that can damage it, or otherwise when the conditions are such that power system related limits would be exceeded or when, for example the conditions for automatic control are not met.

For the Automatic voltage control for tap changer function, TR1ATCC (90) for single control and TR8ATCC (90) for parallel control, three types of blocking are used:

Partial Block: Prevents operation of the tap changer only in one direction (only VRAISE or VLOWER command is blocked) in manual and automatic control mode.

Auto Block: Prevents automatic voltage regulation, but the tap changer can still be controlled manually.

Total Block: Prevents any tap changer operation independently of the control mode (automatic as well as manual).

Setting parameters for blocking that can be set in TR1ATCC (90) or TR8ATCC (90) under general settings in PST/local HMI are listed in table 30.

Table 30: Blocking settings

Setting	Values (Range)	Description
OCBk (automatically reset)	Alarm Auto Block Auto&Man Block	When any one of the three HV currents exceeds the preset value *IBlock*, TR1ATCC (90) or TR8ATCC (90) will be temporarily totally blocked. The outputs IBLK and TOTBLK or AUTOBLK will be activated depending on the actual parameter setting.
OVPartBk (automatically reset)	Alarm Auto&Man Block	If the busbar voltage V_B(not the compensated load point voltage UVL) exceeds *Vmax* (see figure 111), an alarm will be initiated or further VRAISE commands will be blocked. If permitted by setting in PST configuration, Fast Step Down (FSD) of the tap changer will be initiated in order to re-enter the voltage into the range *Vmin* < V_B < *Vmax*. The FSD function is blocked when the lowest voltage tap position is reached. The time delay for the FSD function is separately set. The output VHIGH will be activated as long as the voltage is above *Vmax*.
UVPartBk (automatically reset)	Alarm Auto&Man Block	If the busbar voltage V_B (not the compensated load point voltage V_L) is between *Vblock* and *Vmin* (see figure111), an alarm will be initiated or further VLOWER commands will be blocked. The output VLOW will be activated.
UVBk (automatically reset)	Alarm Auto Block Auto&Man Block	If the busbar voltage V_B falls below *Vblock* this blocking condition is active. It is recommended to block automatic control in this situation and allow manual control. This is because the situation normally would correspond to a disconnected transformer and then it should be allowed to operate the tap changer before reconnecting the transformer. The outputs VBLK and TOTBLK or AUTOBLK will be activated depending on the actual parameter setting.
Table continues on next page		

Setting	Values (Range)	Description
RevActPartBk(automatically reset)	Alarm Auto Block	The risk of voltage instability increases as transmission lines become more heavily loaded in an attempt to maximize the efficient use of existing generation and transmission facilities. In the same time lack of reactive power may move the operation point of the power network to the lower part of the P-V-curve (unstable part). Under these conditions, when the voltage starts to drop, it might happen that an VRAISE command can give reversed result that is, a lower busbar voltage. Tap changer operation under voltage instability conditions makes it more difficult for the power system to recover. Therefore, it might be desirable to block TR1ATCC (90) or TR8ATCC (90) temporarily. Requirements for this blocking are: • The load current must exceed the set value *RevActLim* • After an VRAISE command, the measured busbar voltage shall have a lower value than its previous value • The second requirement has to be fulfilled for two consecutive VRAISE commands If all three requirements are fulfilled, TR1ATCC (90) or TR8ATCC (90) automatic control will be blocked for raise commands for a period of time given by the setting parameter *tRevAct* and the output signal REVACBLK will be set. The reversed action feature can be turned off/on with the setting parameter *OperationRA*.
CmdErrBk (manually reset)	Alarm Auto Block Auto&Man Block	Typical operating time for a tap changer mechanism is around 3-8 seconds. Therefore, the function should wait for a position change before a new command is issued. The command error signal, CMDERRAL on the TCMYLTC or TCLYLTC (84) function block, will be set if the tap changer position does not change one step in the correct direction within the time given by the setting *tTCTimeout* in TCMYLTC or TCLYLTC (84) function block. The tap changer module TCMYLTC or TCLYLTC (84) will then indicate the error until a successful command has been carried out or it has been reset by changing control mode of TR1ATCC (90) or TR8ATCC (90) function to Manual and then back to Automatic. The outputs CMDERRAL on TCMYLTC or TCLYLTC (84) and TOTBLK or AUTOBLK on TR1ATCC (90) or TR8ATCC (90) will be activated depending on the actual parameter setting. This error condition can be reset by the input RESETERR on TCMYLTC (84) function block, or alternatively by changing control mode of TR1ATCC (90) or TR8ATCC (90) function to Manual and then back to Automatic.

Table continues on next page

Setting	Values (Range)	Description
TapChgBk (manually reset	Alarm Auto Block Auto&Man Block	If the input TCINPROG of TCMYLTC or TCLYLTC (84) function block is connected to the tap changer mechanism, then this blocking condition will be active if the TCINPROG input has not reset when the *tTCTimeout* timer has timed out. The output TCERRAL will be activated depending on the actual parameter setting. In correct operation the TCINPROG shall appear during the VRAISE/VLOWER output pulse and disappear before the *tTCTimeout* time has elapsed. This error condition can be reset by the input RESETERR on TCMYLTC (84) function block, or alternatively by changing control mode of TR1ATCC (90) or TR8ATCC (90) function to Manual and then back to Automatic.
Table continues on next page		

Setting	Values (Range)	Description
TapPosBk (automatically reset/manually reset)	Alarm Auto Block Auto&Man Block	This blocking/alarm is activated by either: 1. The tap changer reaching an end position i.e. one of the extreme positions according to the setting parameters *LowVoltTap*and *HighVoltTap*. When the tap changer reaches one of these two positions further commands in the corresponding direction will be blocked. Effectively this will then be a partial block if *Auto Block* or *Auto&Man Block*is set. The outputs POSERRAL and LOPOSAL or HIPOSAL will be activated. 2. Tap Position Error which in turn can be caused by one of the following conditions: • Tap position is out of range that is, the indicated position is above or below the end positions. • The tap changer indicates that it has changed more than one position on a single raise or lower command. • The tap position reading shows a BCD code error (unaccepted combination) or a parity fault. • The reading of tap position shows a mA value that is out of the mA-range. Supervision of the input signal for MIM is made by setting the MIM parameters I_Max and I_Min to desired values, for example, I_Max = 20mA and I_Min = 4mA. • Very low or negative mA-values. • Indication of hardware fault on BIM or MIM module. Supervision of the input hardware module is provided by connecting the corresponding error signal to the INERR input (input module error) or BIERR on TCMYLTC or TCLYLTC (84) function block. • Interruption of communication with the tap changer. The outputs POSERRAL and AUTOBLK or TOTBLK will be set. This error condition can be reset by the input RESETERR on TCMYLTC (84) function block, or alternatively by changing control mode of TR1ATCC (90) or TR8ATCC (90) function to Manual and then back to Automatic.
CircCurrBk (automatically reset)	Alarm Auto Block Auto&Man Block	When the magnitude of the circulating current exceeds the preset value (setting parameter *CircCurrLimit*) for longer time than the set time delay (setting parameter *tCircCurr*) it will cause this blocking condition to be fulfilled provided that the setting parameter *OperCCBlock* is *Enabled*. The signal resets automatically when the circulating current decreases below the preset value. Usually this can be achieved by manual control of the tap changers. TR1ATCC (90) or TR8ATCC (90) outputs ICIRC and TOTBLK or AUTOBLK will be activated depending on the actual parameter setting.
MFPosDiffBk (manually reset)	Alarm Auto Block	In the master-follower mode, if the tap difference between a follower and the master is greater than the set value (setting parameter *MFPosDiffLim*) then this blocking condition is fulfilled and the outputs OUTOFPOS and AUTOBLK (alternatively an alarm) will be set.

Setting parameters for blocking that can be set in TR1ATCC (90) or TR8ATCC (90) under setting group Nx in PST/ local HMI are listed in table 31.

Table 31: Blocking settings

Setting	Value (Range)	Description
TotalBlock (manually reset)	*Enabled*/ *Disabled*	TR1ATCC (90) or TR8ATCC (90) function can be totally blocked via the setting parameter *TotalBlock*, which can be set *Enabled*/ *Disabled* from the local HMI or PST. The output TOTBLK will be activated.
AutoBlock (manually reset)	*Enabled*/ *Disabled*	TR1ATCC (90) or TR8ATCC (90) function can be blocked for automatic control via the setting parameter *AutoBlock*, which can be set *Enabled*/ *Disabled* from the local HMI or PST. The output AUTOBLK will be set.

TR1ATCC (90) or TR8ATCC (90) blockings that can be made via input signals in the function block are listed in table 32.

Table 32: Blocking via binary inputs

Input name	Activation	Description
BLOCK (manually reset)	*Enabled*/ *Disabled*(via binary input)	The voltage control function can be totally blocked via the binary input BLOCK on TR1ATCC (90) or TR8ATCC (90) function block. The output TOTBLK will be activated.
EAUTOBLK (manually reset)	*Enabled*/ *Disabled*(via binary input)	The voltage control function can be blocked for automatic control via the binary input EAUTOBLK on TR1ATCC (90) or TR8ATCC (90) function block. The output AUTOBLK will be activated. Deblocking is made via the input DEBLKAUT.

Blockings activated by the operating conditions and there are no setting or separate external activation possibilities are listed in table 33.

Table 33: Blockings without setting possibilities

Activation	Type of blocking	Description
Disconnected transformer (automatically reset)	Auto Block	Automatic control is blocked for a transformer when parallel control with the circulating current method is used, and that transformer is disconnected from the LV-busbar. (This is under the condition that the setting *OperHoming* is selected *Off* for the disconnected transformer. Otherwise the transformer will get into the state Homing). The binary input signal DISC in TR1ATCC (90) or TR8ATCC (90) function shall be used to supervise if the transformer LV circuit breaker is closed or not. The outputs TRFDISC and AUTOBLK will be activated . Blocking will be removed when the transformer is reconnected (input signal DISC set back to zero).
No Master/More than one Master (automatically reset)	Auto Block	Automatic control is blocked when parallel control with the master-follower method is used, and the master is disconnected from the LV-busbar. Also if there for some reason should be a situation with more than one master in the system, the same blocking will occur. The binary input signal DISC in TR1ATCC (90) or TR8ATCC (90) function shall be used to supervise if the transformer LV circuit breaker is closed or not. The outputs TRFDISC, MFERR and AUTOBLK will be activated. The followers will also be blocked by mutual blocking in this situation. Blocking will be removed when the transformer is reconnected (input signal DISC set back to zero).
One transformer in a parallel group switched to manual control (automatically reset)	Auto Block	When the setting *OperationAdapt* is "*Disabled*", automatic control will be blocked when parallel control with the master-follower or the circulating current method is used, and one of the transformers in the group is switched from auto to manual. The output AUTOBLK will be activated.
Communication error (COMMERR) (automatic deblocking)	Auto block	If the horizontal communication (GOOSE) for any one of TR8ATCCs (90) in the group fails it will cause blocking of automatic control in all TR8ATCC (90) functions, which belong to that parallel group. This error condition will be reset automatically when the communication is re-established. The outputs COMMERR and AUTOBLK will be set.

Circulating current method

Mutual blocking

When one parallel instance of voltage control TR8ATCC (90) blocks its operation, all other TR8ATCCs (90) working in parallel with that module, shall block their operation as well. To achieve this, the affected TR8ATCC (90) function broadcasts a mutual block to the other group members via the horizontal communication. When mutual block is received from any of the group members, automatic operation is blocked in the receiving TR8ATCCs (90) that is, all units of the parallel group.

The following conditions in any one of TR8ATCCs (90) in the group will cause mutual blocking when the circulating current method is used:

- Over-Current
- Total block via settings
- Total block via configuration
- Analog input error
- Automatic block via settings
- Automatic block via configuration
- Under-Voltage
- Command error
- Position indication error
- Tap changer error
- Reversed Action
- Circulating current
- Communication error

Master-follower method

When the master is blocked, the followers will not tap by themselves and there is consequently no need for further mutual blocking. On the other hand, when a follower is blocked there is a need to send a mutual blocking signal to the master. This will prevent a situation where the rest of the group otherwise would be able to tap away from the blocked individual, and that way cause high circulating currents.

Thus, when a follower is blocked, it broadcasts a mutual block on the horizontal communication. The master picks up this message, and blocks its automatic operation as well.

Besides the conditions listed above for mutual blocking with the circulating current method, the following blocking conditions in any of the followers will also cause mutual blocking:

- Master-follower out of position
- Master-follower error (No master/More than one master)

General

It should be noted that partial blocking will not cause mutual blocking.

TR8ATCC (90), which is the “source” of the mutual blocking will set its AUTOBLK output as well as the output which corresponds to the actual blocking condition for example, IBLK for over-current blocking. The other TR8ATCCs (90) that receive a mutual block signal will only set its AUTOBLK output.

The mutual blocking remains until TR8ATCC (90) that dispatched the mutual block signal is de-blocked. Another way to release the mutual blocking is to force TR8ATCC (90), which caused mutual blocking to Single mode operation. This is done by activating the binary input SNGLMODE on TR8ATCC (90) function block or by setting the parameter *OperationPAR* to *Off* from the built-in local HMI or PST.

TR8ATCC (90) function can be forced to single mode at any time. It will then behave exactly the same way as described in section "Automatic voltage control for a single transformer", except that horizontal communication messages are still sent and received, but the received messages are ignored. TR8ATCC (90) is at the same time also automatically excluded from the parallel group.

Disabling of blockings in special situations

When the Automatic voltage control for tap changer TR1ATCC (90) for single control and TR8ATCC (90) for parallel control, function block is connected to read back information (tap position value and tap changer in progress signal) it may sometimes be difficult to find timing data to be set in TR1ATCC (90) or TR8ATCC (90) for proper operation. Especially at commissioning of for example, older transformers the sensors can be worn and the contacts maybe bouncing etc. Before the right timing data is set it may then happen that TR1ATCC (90) or TR8ATCC (90) becomes totally blocked or blocked in auto mode because of incorrect settings. In this situation, it is recommended to temporarily set these types of blockings to alarm instead until the commissioning of all main items are working as expected.

Tap Changer position measurement and monitoring

Tap changer extreme positions

This feature supervises the extreme positions of the tap changer according to the settings *LowVoltTap* and *HighVoltTap*. When the tap changer reaches its lowest/highest position, the corresponding VLOWER/VRAISE command is prevented in both automatic and manual mode.

Monitoring of tap changer operation

The Tap changer control and supervision, 6 binary inputs TCMYLTC (84) or 32 binary inputs TCLYLTC (84) output signal VRAISE or VLOWER is set high when TR1ATCC (90) or TR8ATCC (90) function has reached a decision to operate the tap changer. These outputs from TCMYLTC (84) and TCLYLTC (84) function blocks shall be connected to a binary output module, BOM in order to give the commands to the tap changer mechanism. The length of the output pulse can be set via TCMYLTC (84) or TCLYLTC (84) setting parameter *tPulseDur*. When an VRAISE/VLOWER command is given, a timer (set by setting *tTCTimeout*) (settable in PST/local HMI) is also started, and the idea is then that this timer shall have a setting that covers, with some margin, a normal tap changer operation.

Usually the tap changer mechanism can give a signal, “Tap change in progress”, during the time that it is carrying through an operation. This signal from the tap changer

mechanism can be connected via a BIM module to TCMYLTC (84) or TCLYLTC (84) input TCINPROG, and it can then be used by TCMYLTC (84) or TCLYLTC (84) function in three ways, which is explained below with the help of figure 121.

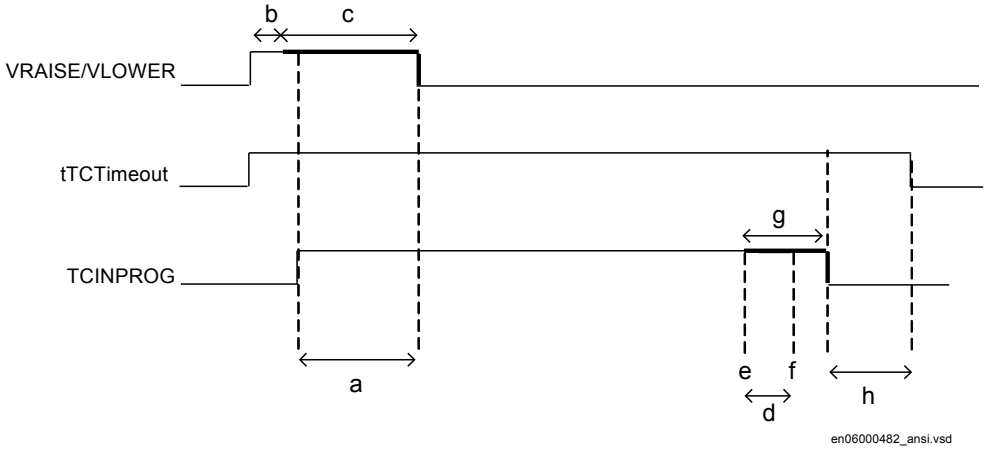

Figure 121: Timing of pulses for tap changer operation monitoring

pos	Description
a	Safety margin to avoid that TCINPROG is not set high without the simultaneous presence of an VRAISE or VLOWER command.
b	Time setting *tPulseDur*.
c	Fixed extension 4 sec. of *tPulseDur*, made internally in TCMYLTC (84) or TCLYLTC (84) function.
d	Time setting *tStable*
e	New tap position reached, making the signal “tap change in progress” disappear from the tap changer, and a new position reported.
f	The new tap position available in TCMYLTC (84) or TCLYLTC (84).
g	Fixed extension 2 sec. of TCINPROG, made internally in TCMYLTC (84) or TCLYLTC (84) function.
h	Safety margin to avoid that TCINPROG extends beyond *tTCTimeout*.

The first use is to reset the Automatic voltage control for tap changer function TR1ATCC (90) for single control and TR8ATCC (90) for parallel control as soon as the signal TCINPROG disappears. If the TCINPROG signal is not fed back from the tap changer mechanism, TR1ATCC (90) or TR8ATCC (90) will not reset until *tTCTimeout* has timed out. The advantage with monitoring the TCINPROG signal in this case is thus that resetting of TR1ATCC (90) or TR8ATCC (90) can sometimes be made faster, which in turn makes the system ready for consecutive commands in a shorter time.

The second use is to detect a jammed tap changer. If the timer *tTCTimeout* times out before the TCINPROG signal is set back to zero, the output signal TCERRAL is set high and TR1ATCC (90) or TR8ATCC (90) function is blocked.

The third use is to check the proper operation of the tap changer mechanism. As soon as the input signal TCINPROG is set back to zero TCMYLTC (84) or TCLYLTC (84) function expects to read a new and correct value for the tap position. If this does not happen the output signal CMDERRAL is set high and TR1ATCC (90) or TR8ATCC (90) function is blocked. The fixed extension (g) 2 sec. of TCINPROG, is made to prevent a situation where this could happen despite no real malfunction.

In figure 121, it can be noted that the fixed extension (c) 4 sec. of *tPulseDur*, is made to prevent a situation with TCINPROG set high without the simultaneous presence of an VRAISE or VLOWER command. If this would happen, TCMYLTC (84) or TCLYLTC (84) would see this as a spontaneous TCINPROG signal without an accompanying VRAISE or VLOWER command, and this would then lead to the output signal TCERRAL being set high and TR1ATCC (90) or TR8ATCC (90) function being blocked. Effectively this is then also a supervision of a run-away tap situation.

Hunting detection

Hunting detection is provided in order to generate an alarm when the voltage control gives an abnormal number of commands or abnormal sequence of commands within a pre-defined period of time.

There are three hunting functions:

1. The Automatic voltage control for tap changer function, TR1ATCC (90) for single control and TR8ATCC (90) for parallel control will activate the output signal DAYHUNT when the number of tap changer operations exceed the number given by the setting *DayHuntDetect* during the last 24 hours (sliding window). Active as well in manual as in automatic mode.
2. TR1ATCC (90) or TR8ATCC (90) function will activate the output signal HOURHUNT when the number of tap changer operations exceed the number given by the setting *HourHuntDetect* during the last hour (sliding window). Active as well in manual as in automatic mode.
3. TR1ATCC (90) or TR8ATCC (90) function will activate the output signal HUNTING when the total number of contradictory tap changer operations (RAISE, LOWER, RAISE, LOWER, and so on) exceeds the pre-set value given by the setting *NoOpWindow* within the time sliding window specified via the setting parameter *tWindowHunt*. Only active in automatic mode.

Hunting can be the result of a narrow deadband setting or some other abnormalities in the control system.

Wearing of the tap changer contacts

Two counters, ContactLife and NoOfOperations are available within the Tap changer control and supervision function, 6 binary inputs TCMYLTC or 32 binary inputs TCLYLTC (84). They can be used as a guide for maintenance of the tap changer mechanism. The ContactLife counter represents the remaining number of operations (decremental counter) at rated load.

$$\text{ContactLife}_{n+1} = \text{ContactLife}_{n} - \left(\frac{I_{load}}{I_{rated}}\right)^{\alpha}$$

(Equation 126)

where n is the number of operations and α is an adjustable setting parameter, *CLFactor*, with default value is set to 2. With this default setting an operation at rated load (current measured on HV-side) decrements the ContactLife counter with 1.

The NoOfOperations counter simply counts the total number of operations (incremental counter).

Both counters are stored in a non-volatile memory as well as, the times and dates of their last reset. These dates are stored automatically when the command to reset the counter is issued. It is therefore necessary to check that the IED internal time is correct before these counters are reset. The counter value can be reset on the local HMI under **Main menu/Reset/Reset counters/TransformerTapControl(YLTC,84)/TCMYLTC:1 or TCLYLTC:1/Reset Counter and ResetCLCounter**

Both counters and their last reset dates are shown on the local HMI as service values under **Main menu/Test/Function status/Control/TransformerTapControl(YLTC,84)/TCMYLTC:x/TCLYLTC:x/CLCNT_VAL**and**Main menu/Test/Function status/Control/TransformerTapControl (YLTC,84)/TCMYLTC:x/TCLYLTC:x/CNT_VAL**

13.4.3 Setting guidelines

13.4.3.1 TR1ATCC or TR8ATCC general settings

TrfId: The transformer identity is used to identify transformer individuals in a parallel group. Thus, transformers that can be part of the same parallel group must have unique identities. Moreover, all transformers that communicate over the same horizontal communication (GOOSE) must have unique identities.

Xr2: The reactance of the transformer in primary ohms referred to the LV side.

tAutoMSF: Time delay set in a follower for execution of a raise or lower command given from a master. This feature can be used when a parallel group is controlled in the master-follower mode, follow tap, and it is individually set for each follower, which means that different time delays can be used in the different followers in order to avoid simultaneous tapping if this is wanted. It shall be observed that it is not applicable in the follow command mode.

OperationAdapt: This setting enables or disables adapt mode for parallel control with the circulating current method or the master-follower method.

MFMode: Selection of Follow Command or Follow Tap in the master-follower mode.

CircCurrBk: Selection of action to be taken in case the circulating current exceeds CircCurrLimit.

CmdErrBk: Selection of action to be taken in case the feedback from the tap changer has resulted in command error.

OCBk: Selection of action to be taken in case any of the three phase currents on the HV-side has exceeded *Iblock*.

MFPosDiffBk: Selection of action to be taken in case the tap difference between a follower and the master is greater than *MFPosDiffLim*.

OVPartBk: Selection of action to be taken in case the busbar voltage V_B exceeds *Vmax*.

RevActPartBk: Selection of action to be taken in case Reverse Action has been activated.

TapChgBk: Selection of action to be taken in case a Tap Changer Error has been identified.

TapPosBk: Selection of action to be taken in case of Tap Position Error, or if the tap changer has reached an end position.

UVBk: Selection of action to be taken in case the busbar voltage V_B falls below *Vblock*.

UVPartBk: Selection of action to be taken in case the busbar voltage V_B is between *UVblock* and *Vmin*.

13.4.3.2 TR1ATCC (90) or TR8ATCC (90) Setting group

General

Operation: Switching automatic voltage control for tap changer, TR1ATCC (90) for single control and TR8ATCC (90) for parallel control function *Enabled*/*Disabled*.

I1Base: Base current in primary Ampere for the HV-side of the transformer.

I2Base: Base current in primary Ampere for the LV-side of the transformer.

VBase: Base voltage in primary kV for the LV-side of the transformer.

MeasMode: Selection of single phase, or phase-phase, or positive sequence quantity to be used for voltage and current measurement on the LV-side. The involved phases are also selected. Thus, single phase as well as phase-phase or three-phase feeding on the LV-side is possible but it is commonly selected for current and voltage.

Q1, *Q2* and *Q3*: Mvar value of a capacitor bank or reactor that is connected between the power transformer and the CT, such that the current of the capacitor bank (reactor) needs to be compensated for in the calculation of circulating currents. There are three independent settings *Q1*, *Q2* and *Q3* in order to make possible switching of three steps in a capacitor bank in one bay.

TotalBlock: When this setting is *Enabled*, TR1ATCC (90) or TR8ATCC (90) function that is, the voltage control is totally blocked for manual as well as automatic control.

AutoBlock: When this setting is *Enabled*, TR1ATCC (90) or TR8ATCC (90) function that is, the voltage control is blocked for automatic control.

Operation

FSDMode: This setting enables/disables the fast step down function. Enabling can be for automatic and manual control, or for only automatic control alternatively.

tFSD: Time delay to be used for the fast step down tapping.

Voltage

VSet: Setting value for the target voltage, to be set in per cent of *VBase*.

VDeadband: Setting value for one half of the outer deadband, to be set in per cent of *VBase*. The deadband is symmetrical around *VSet*, see section "Automatic voltage control for a single transformer", figure 111. In that figure *VDeadband* is equal to ΔV. The setting is normally selected to a value near the power transformer's tap changer voltage step (typically 75 - 125% of the tap changer step).

VDeadbandInner: Setting value for one half of the inner deadband, to be set in per cent of *VBase*. The inner deadband is symmetrical around *VSet*, see section "Automatic voltage control for a single transformer",figure 111. In that figure *VDeadbandInner* is equal to ΔV_{in}. The setting shall be smaller than *VDeadband*. Typically the inner deadband can be set to 25-70% of the *VDeadband* value.

Vmax: This setting gives the upper limit of permitted busbar voltage (see section "Automatic voltage control for a single transformer", figure 111). It is set in per cent of *VBase*. If *OVPartBk* is set to *Auto&ManBlock*, then busbar voltages above *Vmax* will result in a partial blocking such that only lower commands are permitted.

Vmin This setting gives the lower limit of permitted busbar voltage (see section "Automatic voltage control for a single transformer", figure 111). It is set in per cent of *VBase*. If *UVPartBk* is set to *Auto Block* or*Auto&ManBlock*, then busbar voltages below *Vmin* will result in a partial blocking such that only raise commands are permitted.

Vblock: Voltages below *Vblock* normally correspond to a disconnected transformer and therefore it is recommended to block automatic control for this condition (setting *UVBk*). *Vblock* is set in per cent of *VBase*.

Time

t1Use: Selection of time characteristic (definite or inverse) for *t1*.

t1: Time delay for the initial (first) raise/lower command.

t2Use: Selection of time characteristic (definite or inverse) for *t2*.

t2: Time delay for consecutive raise/lower commands. In the circulating current method, the second, third, etc. commands are all executed with time delay *t2* independently of which transformer in the parallel group that is tapping. In the master-follower method with the follow tap option, the master is executing the second, third, etc. commands with time delay *t2*. The followers on the other hand read the master's tap position, and adapt to that with the additional time delay given by the setting *tAutoMSF* and set individually for each follower.

t_MinTripDelay: The minimum operate time when inverse time characteristic is used (see section "Time characteristic", figure 112).

Line voltage drop compensation (LDC)

OpertionLDC: Sets the line voltage drop compensation function *Enabled*/*Disabled*.

OperCapaLDC: This setting, if set *Enabled*, will permit the load point voltage to be greater than the busbar voltage when line voltage drop compensation is used. That situation can be caused by a capacitive load. When the line voltage drop compensation function is used for parallel control with the reverse reactance method, then *OperCapaLDC* must always be set *Enabled*.

Rline and *Xline*: For line voltage drop compensation, these settings give the line resistance and reactance from the station busbar to the load point. The settings for *Rline* and *Xline* are given in primary system ohms. If more than one line is connected to the LV busbar, equivalent *Rline* and *Xline* values should be calculated and given as settings.

When the line voltage drop compensation function is used for parallel control with the reverse reactance method, then the compensated voltage which is designated "load point voltage" V_L is effectively an increase in voltage up into the transformer. To achieve this voltage increase, *Xline* must be negative. The sensitivity of the parallel voltage regulation is given by the magnitude of *Rline* and *Xline* settings, with *Rline* being important in order

to get a correct control of the busbar voltage. This can be realized in the following way. Figure 113 shows the vector diagram for a transformer controlled in a parallel group with the reverse reactance method and with no circulation (for example, assume two equal transformers on the same tap position). The load current lags the busbar voltage V_B with the power factor φ and the argument of the impedance *Rline* and *Xline* is designated φ1.

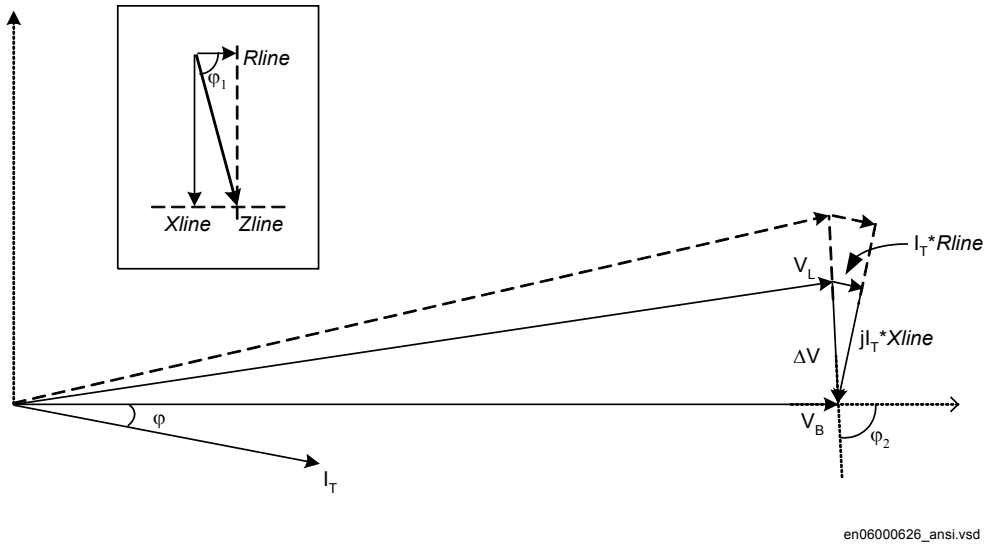

Figure 122: Transformer with reverse reactance regulation and no circulating current

The voltage $\Delta V = V_B - V_L = I_T * Rline + j\, I_T * Xline$ has the argument φ2 and it is realised that if φ2 is slightly less than -90°, then V_L will have approximately the same length as V_B regardless of the magnitude of the transformer load current I_T (indicated with the dashed line). The automatic tap change control regulates the voltage towards a set target value, representing a voltage magnitude, without considering the phase angle. Thus, V_B as well as V_L and also the dashed line could all be said to be on the target value.

Assume that we want to achieve that φ_2 = -90°, then:

$$\overline{\Delta V} = \overline{Z} \times \overline{I}$$
$$\Downarrow$$
$$\Delta V e^{-j90^0} = Z e^{j\varphi_1} \times I e^{j\varphi} = ZIe^{j(\varphi_1+\varphi)}$$
$$\Downarrow$$
$$-90^0 = \varphi_1 + \varphi$$
$$\Downarrow$$
$$\varphi_1 = -\varphi - 90^0$$

(Equation 127)

If for example cosφ = 0.8 then φ = arcos 0.8 = 37°. With the references in figure 122, φ will be negative (inductive load) and we get:

$$\varphi_1 = -(-37^0) - 90^0 = -53^0$$

(Equation 128)

To achieve a more correct regulation, an adjustment to a value of φ2 slightly less than -90° (2 – 4° less) can be made.

The effect of changing power factor of the load will be that φ2 will no longer be close to -90° resulting in V_L being smaller or greater than V_B if the ratio Rline/Xline is not adjusted.

Figure 123 shows an example of this where the settings of *Rline* and *Xline* for φ = 11° from figure 122 has been applied with a different value of φ (φ = 30°).

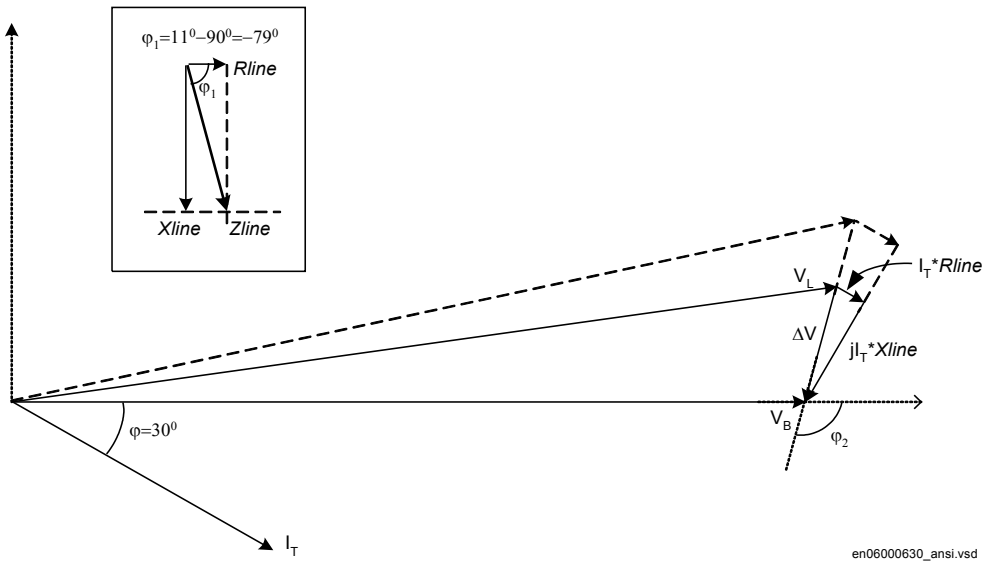

Figure 123: Transformer with reverse reactance regulation poorly adjusted to the power factor

As can be seen in figure 124, the change of power factor has resulted in an increase of φ2 which in turn causes the magnitude of V_L to be greater than VB. It can also be noted that an increase in the load current aggravates the situation, as does also an increase in the setting of Zline (*Rline* and *Xline*).

Apparently the ratio Rline/Xline according to equation 128, that is the value of φ1 must be set with respect to the power factor, also meaning that the reverse reactance method should not be applied to systems with varying power factor.

The setting of *Xline* gives the sensitivity of the parallel regulation. If *Xline* is set too low, the transformers will not pull together and a run away tap situation will occur. On the other hand, a high setting will keep the transformers strongly together with no, or only a small difference in tap position, but the voltage regulation as such will be more sensitive to a deviation from the anticipated power factor. A too high setting of *Xline* can cause a hunting situation as the transformers will then be prone to over react on deviations from the target value.

There is no rule for the setting of *Xline* such that an optimal balance between control response and susceptibility to changing power factor is achieved. One way of determining the setting is by trial and error. This can be done by setting e.g. *Xline* equal to half of the transformer reactance, and then observe how the parallel control behaves during a couple of days, and then tune it as required. It shall be emphasized that a quick response of the regulation that quickly pulls the transformer tap changers into equal positions, not necessarily corresponds to the optimal setting. This kind of response is easily achieved by setting a high *Xline* value, as was discussed above, and the disadvantage is then a high susceptibility to changing power factor.

A combination of line voltage drop compensation and parallel control with the negative reactance method is possible to do simply by adding the required *Rline* values and the required *Xline* values separately to get the combined impedance. However, the line drop impedance has a tendency to drive the tap changers apart, which means that the reverse reactance impedance normally needs to be increased.

Load voltage adjustment (LVA)

LVAConst1: Setting of the first load voltage adjustment value. This adjustment of the target value *VSet* is given in percent of *VBase*.

LVAConst2: Setting of the second load voltage adjustment value. This adjustment of the target value *VSet* is given in percent of*VBase*.

LVAConst3: Setting of the third load voltage adjustment value. This adjustment of the target value *VSet* is given in percent of *VBase*.

LVAConst4: Setting of the fourth load voltage adjustment value. This adjustment of the target value *VSet* is given in percent of *VBase*.

VRAuto: Setting of the automatic load voltage adjustment. This adjustment of the target value*VSet* is given in percent of *VBase*, and it is proportional to the load current with the set value reached at the nominal current *I2Base*.

RevAct

OperationRA: This setting enables/disables the reverse action partial blocking function.

tRevAct: After the reverse action has picked up, this time setting gives the time during which the partial blocking is active.

RevActLim: Current threshold for the reverse action activation. This is just one of two criteria for activation of the reverse action partial blocking.

Tap changer control (TCCtrl)

Iblock: Current setting of the over current blocking function. In case, the transformer is carrying a current exceeding the rated current of the tap changer for example, because of an external fault. The tap changer operations shall be temporarily blocked. This function typically monitors the three phase currents on the HV side of the transformer.

DayHuntDetect: Setting of the number of tap changer operations required during the last 24 hours (sliding window) to activate the signal DAYHUNT

HourHuntDetect: Setting of the number of tap changer operations required during the last hour (sliding window) to activate the signal HOURHUNT

tWindowHunt: Setting of the time window for the window hunting function. This function is activated when the number of contradictory commands to the tap changer exceeds the specified number given by *NoOpWindow* within the time *tWindowHunt*.

NoOpWindow: Setting of the number of contradictory tap changer operations (RAISE, LOWER, RAISE, LOWER etc.) required during the time window *tWindowHunt* to activate the signal HUNTING.

Power

P>: When the active power exceeds the value given by this setting, the output PGTFWD will be activated after the time delay *tPower*. It shall be noticed that the setting is given with sign, which effectively means that a negative value of *P*> means an active power greater than a value in the reverse direction. This is shown in figure 124 where a negative value of *P*> means pickup for all values to the right of the setting. Reference is made to figure 119 for definition of forward and reverse direction of power through the transformer.

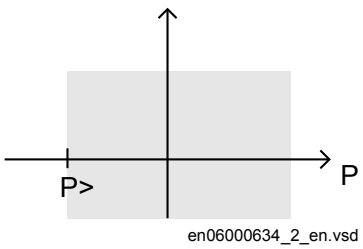

Figure 124: Setting of a negative value for P>

P<: When the active power falls below the value given by this setting, the output PLTREV will be activated after the time delay *tPower*. It shall be noticed that the setting is given with sign, which effectively means that, for example a positive value of *P*< means an

active power less than a value in the forward direction. This is shown in figure 125 where a positive value of *P*< means pickup for all values to the left of the setting. Reference is made to figure 119 for definition of forward and reverse direction of power through the transformer.

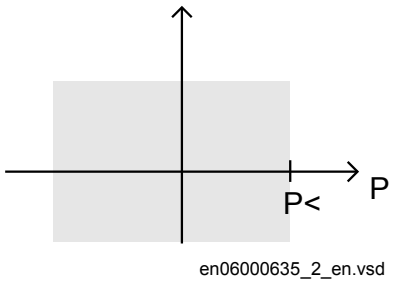

Figure 125: Setting of a positive value for P<

Q>: When the reactive power exceeds the value given by this setting, the output QGTFWD will be activated after the time delay *tPower*. It shall be noticed that the setting is given with sign, which effectively means that the function picks up for all values of reactive power greater than the set value, similar to the functionality for *P*>.

Q<: When the reactive power falls below the value given by this setting, the output QLTREV will be activated after the time delay *tPower*. It shall be noticed that the setting is given with sign, which effectively means that the function picks up for all values of reactive power less than the set value, similar to the functionality for *P*<.

tPower: Time delay for activation of the power monitoring output signals (PGTFWD, PLTREV, QGTFWD and QLTREV).

Parallel control (ParCtrl)

OperationPAR: Setting of the method for parallel operation.

OperCCBlock: This setting enables/disables blocking if the circulating current exceeds *CircCurrLimit*.

CircCurrLimit: Pick up value for the circulating current blocking function. The setting is made in percent of *I2Base*.

tCircCurr: Time delay for the circulating current blocking function.

Comp: When parallel operation with the circulating current method is used, this setting increases or decreases the influence of the circulating current on the regulation.

If the transformers are connected to the same bus on the HV- as well as the LV-side, *Comp* can be calculated with the following formula which is valid for any number of two-

winding transformers in parallel, irrespective if the transformers are of different size and short circuit impedance.

$$\text{Comp} = a \times \frac{2 \times \Delta V}{n \times p} \times 100\%$$

(Equation 129)

where:

- ΔV is the deadband setting in percent.
- *n* denotes the desired number of difference in tap position between the transformers, that shall give a voltage deviation V_{di} which corresponds to the dead-band setting.
- *p* is the tap step (in % of transformer nominal voltage).
- *a* is a safety margin that shall cover component tolerances and other non-linear measurements at different tap positions (for example, transformer reactances changes from rated value at the ends of the regulation range). In most cases a value of a = 1.25 serves well.

This calculation gives a setting of *Comp* that will always initiate an action (start timer) when the transformers have n tap positions difference.

OperSimTap: Enabling/disabling the functionality to allow only one transformer at a time to execute a Lower/Raise command. This setting is applicable only to the circulating current method, and when enabled, consecutive tap changes of the next transformer (if required) will be separated with the time delay *t2*.

OperUsetPar: Enables/disables the use of a common setting for the target voltage *VSet*. This setting is applicable only to the circulating current method, and when enabled, a mean value of the *VSet* values for the transformers in the same parallel group will be calculated and used.

OperHoming: Enables/disables the homing function. Applicable for parallel control with the circulating current method, as well for parallel control with the master-follower method.

VTmismatch: Setting of the level for activation of the output VTALARM in case the voltage measurement in one transformer bay deviates to the mean value of all voltage measurements in the parallel group.

tVTmismatch: Time delay for activation of the output VTALARM.

T1RXOP.....*T8RXOP*: This setting is set *Enabled* for every transformer that can participate in a parallel group with the transformer in case. For this transformer (own transformer), the setting must always be *Disabled*.

TapPosOffs: This setting gives the tap position offset in relation to the master so that the follower can follow the master's tap position including this offset. Applicable when regulating in the follow tap command mode.

MFPosDiffLim: When the difference (including a possible offset according to *TapPosOffs*) between a follower and the master reaches the value in this setting, then the output OUTOFPOS in the Automatic voltage control for tap changer, parallel control TR8ATCC (90) function block of the follower will be activated after the time delay *tMFPosDiff*.

tMFPosDiff: Time delay for activation of the output OUTOFPOS.

Transformer name

TRFNAME: Non-compulsory transformer name. This setting is not used for any purpose by the voltage control function.

13.4.3.3 TCMYLTC and TCLYLTC (84) general settings

LowVoltTap: This gives the tap position for the lowest LV-voltage.

HighVoltTap: This gives the tap position for the highest LV-voltage.

mALow: The mA value that corresponds to the lowest tap position. Applicable when reading of the tap position is made via a mA signal.

mAHigh: The mA value that corresponds to the highest tap position. Applicable when reading of the tap position is made via a mA signal.

CodeType: This setting gives the method of tap position reading.

UseParity: Sets the parity check *Enabled*/*Disabled* for tap position reading when this is made by Binary, BCD, or Gray code.

tStable: This is the time that needs to elapse after a new tap position has been reported to TCMYLTC until it is accepted.

CLFactor: This is the factor designated "a" in equation129. When a tap changer operates at nominal load current(current measured on the HV-side), the ContactLife counter decrements with 1, irrespective of the setting of *CLFactor*. The setting of this factor gives the weighting of the deviation with respect to the load current.

InitCLCounter: The ContactLife counter monitors the remaining number of operations (decremental counter). The setting *InitCLCounter* then gives the start value for the counter that is, the total number of operations at rated load that the tap changer is designed for.

EnabTapCmd: This setting enables/disables the lower and raise commands to the tap changer. It shall be *Enabled* for voltage control, and *Disabled* for tap position feedback to the transformer differential protection T2WPDIF (87T) or T3WPDIF (87T).

TCMYLTC and TCLYLTC (84) Setting group

General

Operation: Switching the TCMYLTC or TCLYLTC (84) function *Enabled*/*Disabled*.

IBase: Base current in primary Ampere for the HV-side of the transformer.

tTCTimeout: This setting gives the maximum time interval for a raise or lower command to be completed.

tPulseDur: Length of the command pulse (VRAISE/VLOWER) to the tap changer. It shall be noticed that this pulse has a fixed extension of 4 seconds that adds to the setting value of *tPulseDur*.

13.5 Logic rotating switch for function selection and LHMI presentation SLGAPC

13.5.1 Identification

Function description	IEC 61850 identification	IEC 60617 identification	ANSI/IEEE C37.2 device number
Logic rotating switch for function selection and LHMI presentation	SLGAPC	-	-

13.5.2 Application

The logic rotating switch for function selection and LHMI presentation function (SLGAPC) (or the selector switch function block, as it is also known) is used to get a selector switch functionality similar with the one provided by a hardware multi-position selector switch. Hardware selector switches are used extensively by utilities, in order to have different functions operating on pre-set values. Hardware switches are however sources for maintenance issues, lower system reliability and extended purchase portfolio. The virtual selector switches eliminate all these problems.

SLGAPC function block has two operating inputs (UP and DOWN), one blocking input (BLOCK) and one operator position input (PSTO).

SLGAPC can be activated both from the local HMI and from external sources (switches), via the IED binary inputs. It also allows the operation from remote (like the station computer). SWPOSN is an integer value output, giving the actual output number. Since the number of positions of the switch can be established by settings (see below), one must be careful in coordinating the settings with the configuration (if one sets the number of positions to x in settings – for example, there will be only the first x outputs available from the block in the configuration). Also the frequency of the (UP or DOWN) pulses should be lower than the setting *tPulse*.

From the local HMI, the selector switch can be operated from Single-line diagram (SLD).

13.5.3 Setting guidelines

The following settings are available for the Logic rotating switch for function selection and LHMI presentation (SLGAPC) function:

Operation: Sets the operation of the function *Enabled* or *Disabled*.

NrPos: Sets the number of positions in the switch (max. 32).

OutType: *Steady* or *Pulsed*.

tPulse: In case of a pulsed output, it gives the length of the pulse (in seconds).

tDelay: The delay between the UP or DOWN activation signal positive front and the output activation.

StopAtExtremes: Sets the behavior of the switch at the end positions – if set to *Disabled*, when pressing UP while on first position, the switch will jump to the last position; when pressing DOWN at the last position, the switch will jump to the first position; when set to *Enabled*, no jump will be allowed.

13.6 Selector mini switch VSGAPC

13.6.1 Identification

Function description	IEC 61850 identification	IEC 60617 identification	ANSI/IEEE C37.2 device number
Selector mini switch	VSGAPC	-	-

13.6.2 Application

Selector mini switch (VSGAPC) function is a multipurpose function used in the configuration tool in PCM600 for a variety of applications, as a general purpose switch. VSGAPC can be used for both acquiring an external switch position (through the IPOS1 and the IPOS2 inputs) and represent it through the single line diagram symbols (or use it in the configuration through the outputs POS1 and POS2) as well as, a command function (controlled by the PSTO input), giving switching commands through the CMDPOS12 and CMDPOS21 outputs.

The output POSITION is an integer output, showing the actual position as an integer number 0 – 3.

An example where VSGAPC is configured to switch Autorecloser enabled–disabled from a button symbol on the local HMI is shown in figure 126. The Close and Open buttons on the local HMI are normally used for enable–disable operations of the circuit breaker.

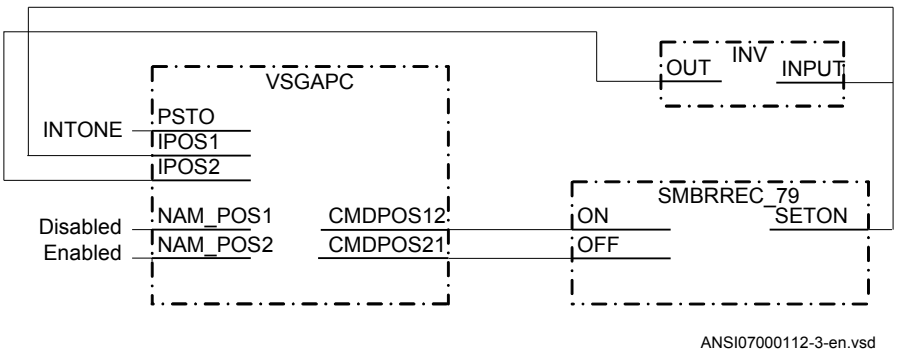

Figure 126: Control of Autorecloser from local HMI through Selector mini switch

VSGAPC is also provided with IEC 61850 communication so it can be controlled from SA system as well.

13.6.3 Setting guidelines

Selector mini switch (VSGAPC) function can generate pulsed or steady commands (by setting the *Mode* parameter). When pulsed commands are generated, the length of the pulse can be set using the *tPulse* parameter. Also, being accessible on the single line diagram (SLD), this function block has two control modes (settable through *CtlModel*): *Dir Norm* and *SBO Enh*.

13.7 Generic communication function for Double Point indication DPGAPC

13.7.1 Identification

Function description	IEC 61850 identification	IEC 60617 identification	ANSI/IEEE C37.2 device number
Generic communication function for Double Point indication	DPGAPC	-	-

13.7.2 Application

DPGAPC function block is used to combine three logical input signals into a two bit position indication, and publish the position indication to other systems, equipment or functions in the substation. The three inputs are named `OPEN`, `CLOSE` and `VALID`. DPGAPC is intended to be used as a position indicator block in the interlocking stationwide logics.

The OPEN and CLOSE inputs set one bit each in the two bit position indication, POSITION. If both OPEN and CLOSE are set at the same time the quality of the output is set to invalid. The quality of the output is also set to invalid if the VALID input is not set.

13.7.3 Setting guidelines

The function does not have any parameters available in the local HMI or PCM600.

13.8 Single point generic control 8 signals SPC8GAPC

13.8.1 Identification

Function description	IEC 61850 identification	IEC 60617 identification	ANSI/IEEE C37.2 device number
Single point generic control 8 signals	SPC8GAPC	-	-

13.8.2 Application

The Single point generic control 8 signals (SPC8GAPC) function block is a collection of 8 single point commands, designed to bring in commands from REMOTE (SCADA) to those parts of the logic configuration that do not need complicated function blocks that have the capability to receive commands (for example SCSWI). In this way, simple commands can be sent directly to the IED outputs, without confirmation. Confirmation (status) of the result of the commands is supposed to be achieved by other means, such as binary inputs and SPGGIO function blocks.

PSTO is the universal operator place selector for all control functions. Even if PSTO can be configured to allow LOCAL or ALL operator positions, the only functional position usable with the SPC8GAPC function block is REMOTE.

13.8.3 Setting guidelines

The parameters for the single point generic control 8 signals (SPC8GAPC) function are set via the local HMI or PCM600.

Operation: turning the function operation *Enabled*/*Disabled*.

There are two settings for every command output (totally 8):

Latchedx: decides if the command signal for output *x* is *Latched* (steady) or *Pulsed*.

tPulsex: if *Latchedx* is set to *Pulsed*, then *tPulsex* will set the length of the pulse (in seconds).

13.9 AutomationBits, command function for DNP3.0 AUTOBITS

13.9.1 Identification

Function description	IEC 61850 identification	IEC 60617 identification	ANSI/IEEE C37.2 device number
AutomationBits, command function for DNP3	AUTOBITS	-	-

13.9.2 Application

Automation bits, command function for DNP3 (AUTOBITS) is used within PCM600 in order to get into the configuration the commands coming through the DNP3.0 protocol.The AUTOBITS function plays the same role as functions GOOSEBINRCV (for IEC 61850) and MULTICMDRCV (for LON).AUTOBITS function block have 32 individual outputs which each can be mapped as a Binary Output point in DNP3. The output is operated by a "Object 12" in DNP3. This object contains parameters for control-code, count, on-time and off-time. To operate an AUTOBITS output point, send a control-code of latch-On, latch-Off, pulse-On, pulse-Off, Trip or Close. The remaining parameters are regarded as appropriate. For example, pulse-On, on-time=100, off-time=300, count=5 would give 5 positive 100 ms pulses, 300 ms apart.

For description of the DNP3 protocol implementation, refer to the Communication manual.

13.9.3 Setting guidelines

AUTOBITS function block has one setting, (*Operation*: *Enabled*/*Disabled*) enabling or disabling the function. These names will be seen in the DNP3 communication management tool in PCM600.

13.10 Single command, 16 signals SINGLECMD

13.10.1 Identification

Function description	IEC 61850 identification	IEC 60617 identification	ANSI/IEEE C37.2 device number
Single command, 16 signals	SINGLECMD	-	-

13.10.2 Application

Single command, 16 signals (SINGLECMD) is a common function and always included in the IED.

The IEDs may be provided with a function to receive commands either from a substation automation system or from the local HMI. That receiving function block has outputs that can be used, for example, to control high voltage apparatuses in switchyards. For local control functions, the local HMI can also be used. Together with the configuration logic

circuits, the user can govern pulses or steady output signals for control purposes within the IED or via binary outputs.

Figure 127 shows an application example of how the user can connect SINGLECMD via configuration logic circuit to control a high-voltage apparatus. This type of command control is normally carried out by sending a pulse to the binary outputs of the IED. Figure 127 shows a close operation. An open breaker operation is performed in a similar way but without the synchro-check condition.

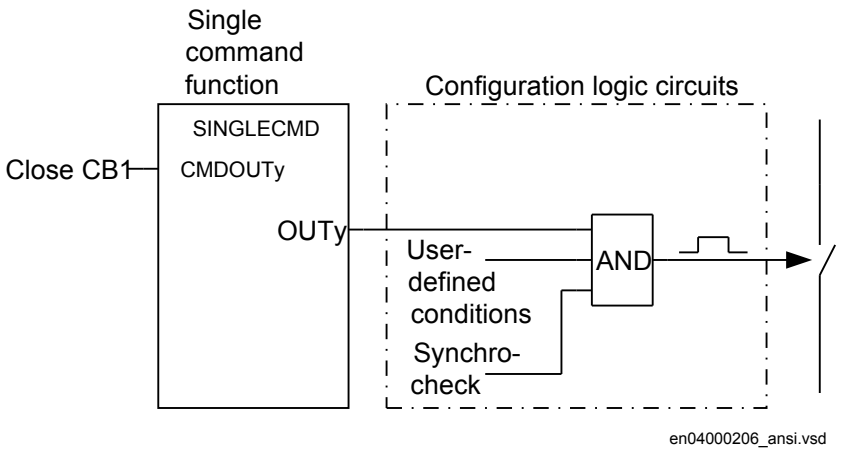

Figure 127: Application example showing a logic diagram for control of a circuit breaker via configuration logic circuits

Figure 128 and figure 129 show other ways to control functions, which require steady Enabled/Disabled signals. Here, the output is used to control built-in functions or external devices.

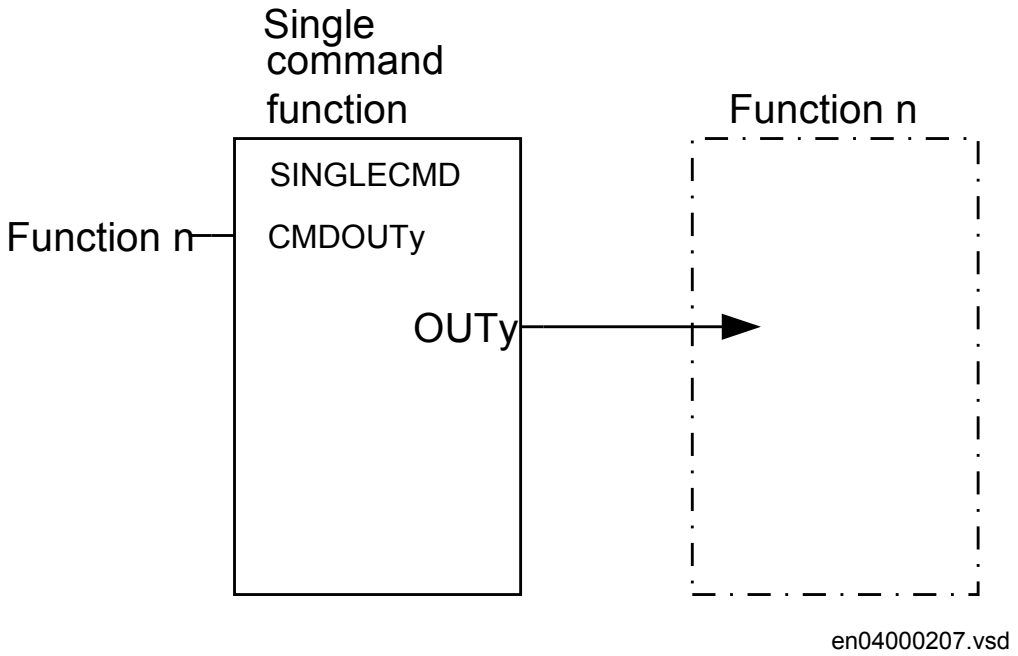

Figure 128: Application example showing a logic diagram for control of built-in functions

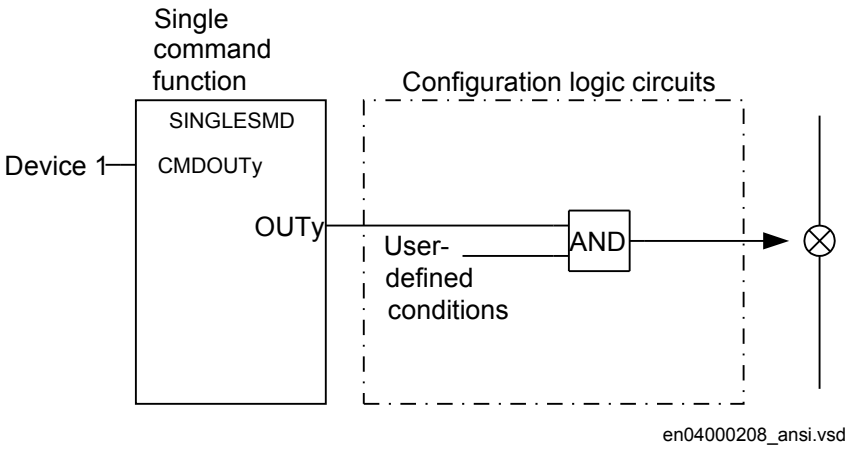

Figure 129: Application example showing a logic diagram for control of external devices via configuration logic circuits

13.10.3 Setting guidelines

The parameters for Single command, 16 signals (SINGLECMD) are set via the local HMI or PCM600.

Parameters to be set are MODE, common for the whole block, and CMDOUTy which includes the user defined name for each output signal. The MODE input sets the outputs to be one of the types Disabled, Steady, or Pulse.

- Disabled, sets all outputs to 0, independent of the values sent from the station level, that is, the operator station or remote-control gateway.
- Steady, sets the outputs to a steady signal 0 or 1, depending on the values sent from the station level.
- Pulse, gives a pulse with 100 ms duration, if a value sent from the station level is changed from 0 to 1. That means the configured logic connected to the command function block may not have a cycle time longer than the cycle time for the command function block.

13.11 Interlocking (3)

The main purpose of switchgear interlocking is:

- To avoid the dangerous or damaging operation of switchgear
- To enforce restrictions on the operation of the substation for other reasons for example, load configuration. Examples of the latter are to limit the number of parallel transformers to a maximum of two or to ensure that energizing is always from one side, for example, the high voltage side of a transformer.

This section only deals with the first point, and only with restrictions caused by switching devices other than the one to be controlled. This means that switch interlock, because of device alarms, is not included in this section.

Disconnectors and grounding switches have a limited switching capacity. Disconnectors may therefore only operate:

- With basically zero current. The circuit is open on one side and has a small extension. The capacitive current is small (for example, < 5A) and power transformers with inrush current are not allowed.
- To connect or disconnect a parallel circuit carrying load current. The switching voltage across the open contacts is thus virtually zero, thanks to the parallel circuit (for example, < 1% of rated voltage). Paralleling of power transformers is not allowed.

Grounding switches are allowed to connect and disconnect grounding of isolated points. Due to capacitive or inductive coupling there may be some voltage (for example < 40% of rated voltage) before grounding and some current (for example < 100A) after grounding of a line.

Circuit breakers are usually not interlocked. Closing is only interlocked against running disconnectors in the same bay, and the bus-coupler opening is interlocked during a busbar transfer.

The positions of all switching devices in a bay and from some other bays determine the conditions for operational interlocking. Conditions from other stations are usually not available. Therefore, a line grounding switch is usually not fully interlocked. The operator must be convinced that the line is not energized from the other side before closing the grounding switch. As an option, a voltage indication can be used for interlocking. Take care to avoid a dangerous *enable* condition at the loss of a VT secondary voltage, for example, because of a blown fuse.

The switch positions used by the operational interlocking logic are obtained from auxiliary contacts or position sensors. For each end position (open or closed) a true indication is needed - thus forming a double indication. The apparatus control function continuously checks its consistency. If neither condition is high (1 or TRUE), the switch may be in an intermediate position, for example, moving. This dynamic state may continue for some time, which in the case of disconnectors may be up to 10 seconds. Should both indications stay low for a longer period, the position indication will be interpreted as *unknown*. If both indications stay high, something is wrong, and the state is again treated as *unknown*.

In both cases an alarm is sent to the operator. Indications from position sensors shall be self-checked and system faults indicated by a fault signal. In the interlocking logic, the signals are used to avoid dangerous *enable* or *release* conditions. When the switching state of a switching device cannot be determined operation is not permitted.

For switches with an individual operation gear per phase, the evaluation must consider possible phase discrepancies. This is done with the aid of an *AND-function* for all three phases in each apparatus for both open and close indications. Phase discrepancies will result in an unknown double indication state.

13.11.1 Configuration guidelines

The following sections describe how the interlocking for a certain switchgear configuration can be realized in the IED by using standard interlocking modules and their interconnections. They also describe the configuration settings. The inputs for delivery specific conditions (Qx_EXy) are set to 1=TRUE if they are not used, except in the following cases:

- 989_EX2 and 989_EX4 in modules BH_LINE_A and BH_LINE_B
- 152_EX3 in module AB_TRAFO

when they are set to 0=FALSE.

13.11.2 Interlocking for line bay ABC_LINE (3)

13.11.2.1 Application

The interlocking for line bay (ABC_LINE, 3) function is used for a line connected to a double busbar arrangement with a transfer busbar according to figure 130. The function can also be used for a double busbar arrangement without transfer busbar or a single busbar arrangement with/without transfer busbar.

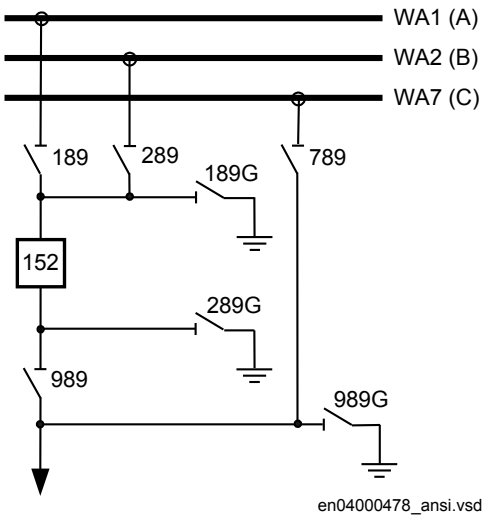

Figure 130: Switchyard layout ABC_LINE (3)

The signals from other bays connected to the module ABC_LINE (3) are described below.

13.11.2.2 Signals from bypass busbar

To derive the signals:

Signal	
BB7_D_OP	All line disconnectors on bypass WA7 except in the own bay are open.
VP_BB7_D	The switch status of disconnectors on bypass busbar WA7 are valid.
EXDU_BPB	No transmission error from any bay containing disconnectors on bypass busbar WA7

These signals from each line bay (ABC_LINE, 3) except that of the own bay are needed:

Signal	
789OPTR	789 is open
VP789TR	The switch status for 789 is valid.
EXDU_BPB	No transmission error from the bay that contains the above information.

For bay n, these conditions are valid:

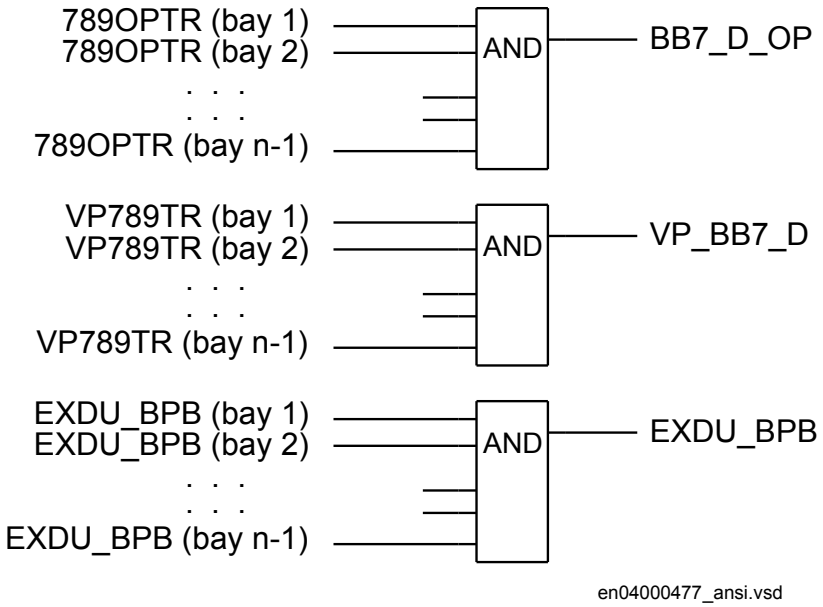

Figure 131: Signals from bypass busbar in line bay n

13.11.2.3 Signals from bus-coupler

If the busbar is divided by bus-section disconnectors into bus sections, the busbar-busbar connection could exist via the bus-section disconnector and bus-coupler within the other bus section.

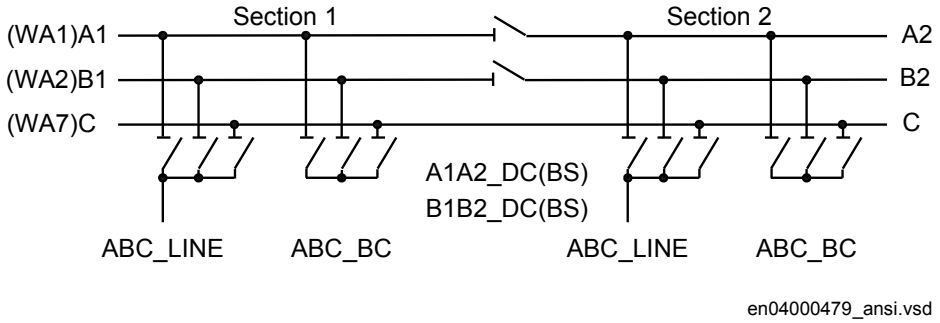

Figure 132: Busbars divided by bus-section disconnectors (circuit breakers)

To derive the signals:

Signal	
BC_12_CL	A bus-coupler connection exists between busbar WA1 and WA2.
BC_17_OP	No bus-coupler connection between busbar WA1 and WA7.
BC_17_CL	A bus-coupler connection exists between busbar WA1and WA7.
BC_27_OP	No bus-coupler connection between busbar WA2 and WA7.
BC_27_CL	A bus-coupler connection exists between busbar WA2 and WA7.
VP_BC_12	The switch status of BC_12 is valid.
VP_BC_17	The switch status of BC_17 is valid.
VP_BC_27	The switch status of BC_27 is valid.
EXDU_BC	No transmission error from any bus-coupler bay (BC).

These signals from each bus-coupler bay (ABC_BC) are needed:

Signal	
BC12CLTR	A bus-coupler connection through the own bus-coupler exists between busbar WA1 and WA2.
BC17OPTR	No bus-coupler connection through the own bus-coupler between busbar WA1 and WA7.
BC17CLTR	A bus-coupler connection through the own bus-coupler exists between busbar WA1 and WA7.
BC27OPTR	No bus-coupler connection through the own bus-coupler between busbar WA2 and WA7.
BC27CLTR	A bus-coupler connection through the own bus-coupler exists between busbar WA2 and WA7.
VPBC12TR	The switch status of BC_12 is valid.
VPBC17TR	The switch status of BC_17 is valid.
VPBC27TR	The switch status of BC_27 is valid.
EXDU_BC	No transmission error from the bay that contains the above information.

These signals from each bus-section disconnector bay (A1A2_DC) are also needed. For B1B2_DC, corresponding signals from busbar B are used. The same type of module (A1A2_DC) is used for different busbars, that is, for both bus-section disconnector A1A2_DC and B1B2_DC.

Signal	
DCOPTR	The bus-section disconnector is open.
DCCLTR	The bus-section disconnector is closed.
VPDCTR	The switch status of bus-section disconnector DC is valid.
EXDU_DC	No transmission error from the bay that contains the above information.

If the busbar is divided by bus-section circuit breakers, the signals from the bus-section coupler bay (A1A2_BS), rather than the bus-section disconnector bay (A1A2_DC) must be used. For B1B2_BS, corresponding signals from busbar B are used. The same type of module (A1A2_BS) is used for different busbars, that is, for both bus-section circuit breakers A1A2_BS and B1B2_BS.

Signal	
S1S2OPTR	No bus-section coupler connection between bus-sections 1 and 2.
S1S2CLTR	A bus-section coupler connection exists between bus-sections 1 and 2.
VPS1S2TR	The switch status of bus-section coupler BS is valid.
EXDU_BS	No transmission error from the bay that contains the above information.

For a line bay in section 1, these conditions are valid:

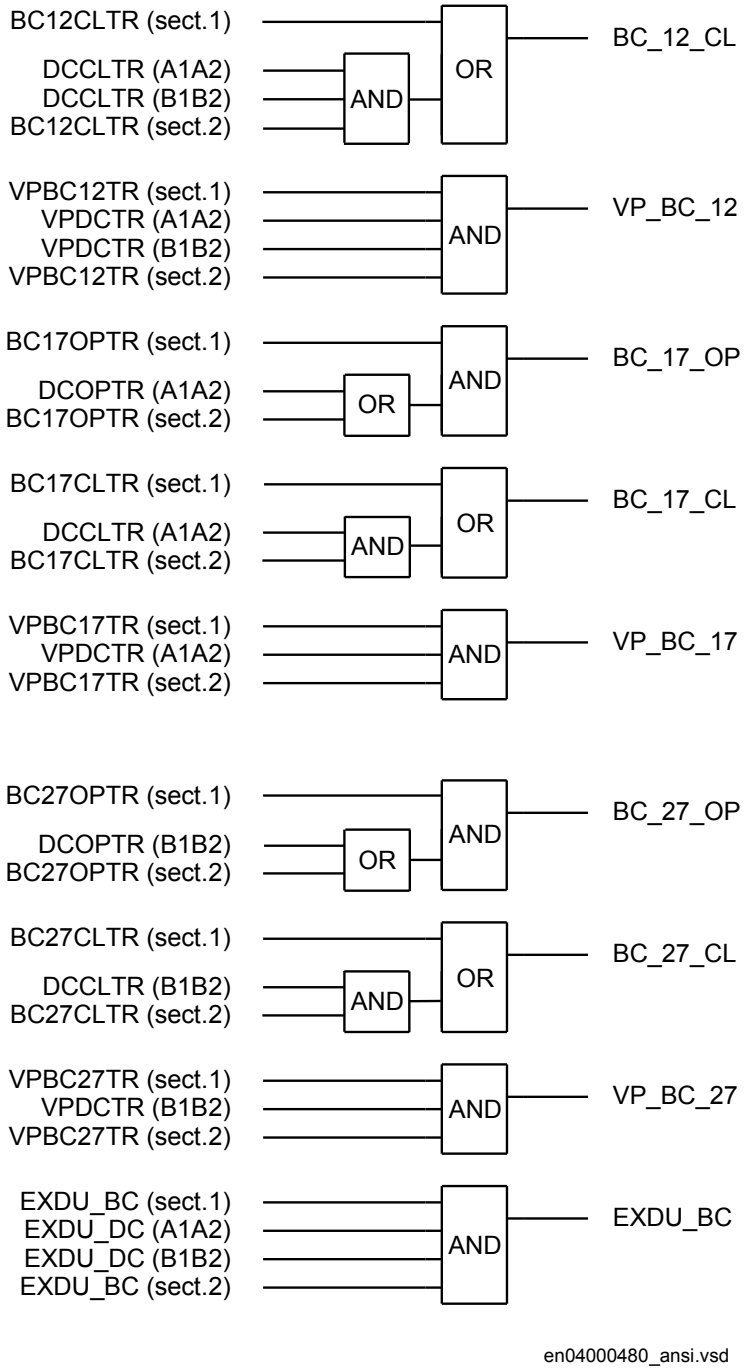

Figure 133: Signals to a line bay in section 1 from the bus-coupler bays in each section

For a line bay in section 2, the same conditions as above are valid by changing section 1 to section 2 and vice versa.

13.11.2.4 Configuration setting

If there is no bypass busbar and therefore no 789 disconnector, then the interlocking for 789 is not used. The states for 789, 7189G, BB7_D, BC_17, BC_27 are set to open by setting the appropriate module inputs as follows. In the functional block diagram, 0 and 1 are designated 0=FALSE and 1=TRUE:

- 789_OP = 1
- 789_CL = 0

- 7189G_OP = 1
- 7189G_CL = 0

- BB7_D_OP = 1

- BC_17_OP = 1
- BC_17_CL = 0
- BC_27_OP = 1
- BC_27_CL = 0

- EXDU_BPB = 1

- VP_BB7_D = 1
- VP_BC_17 = 1
- VP_BC_27 = 1

If there is no second busbar WA2 and therefore no 289 disconnector, then the interlocking for 289 is not used. The state for 289, 2189G, BC_12, BC_27 are set to open by setting the appropriate module inputs as follows. In the functional block diagram, 0 and 1 are designated 0=FALSE and 1=TRUE:

- 289_OP = 1
- 289_CL = 0

- 2189G_OP = 1
- 2189G_CL = 0

- BC_12_CL = 0
- BC_27_OP = 1
- BC_27_CL = 0

- VP_BC_12 = 1

13.11.3 Interlocking for bus-coupler bay ABC_BC (3)

13.11.3.1 Application

The interlocking for bus-coupler bay (ABC_BC, 3) function is used for a bus-coupler bay connected to a double busbar arrangement according to figure 134. The function can also be used for a single busbar arrangement with transfer busbar or double busbar arrangement without transfer busbar.

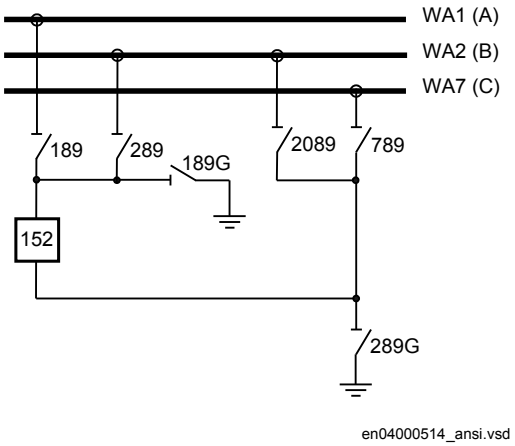

Figure 134: Switchyard layout ABC_BC (3)

13.11.3.2 Configuration

The signals from the other bays connected to the bus-coupler module ABC_BC are described below.

13.11.3.3 Signals from all feeders

To derive the signals:

Signal	
BBTR_OP	No busbar transfer is in progress concerning this bus-coupler.
VP_BBTR	The switch status is valid for all apparatuses involved in the busbar transfer.
EXDU_12	No transmission error from any bay connected to the WA1/WA2 busbars.

These signals from each line bay (ABC_LINE), each transformer bay (AB_TRAFO), and bus-coupler bay (ABC_BC), except the own bus-coupler bay are needed:

Signal	
Q1289OPTR	189 or 289 or both are open.
VP1289TR	The switch status of 189 and 289 are valid.
EXDU_12	No transmission error from the bay that contains the above information.

For bus-coupler bay n, these conditions are valid:

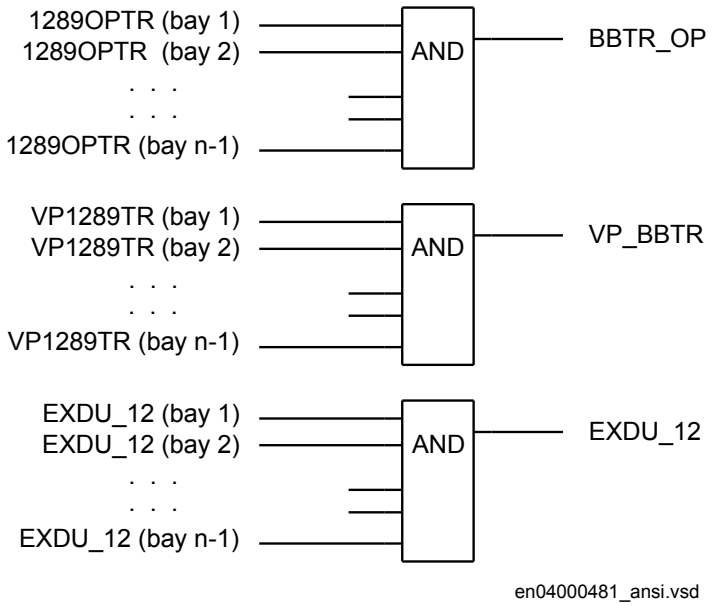

Figure 135: Signals from any bays in bus-coupler bay n

If the busbar is divided by bus-section disconnectors into bus-sections, the signals BBTR are connected in parallel - if both bus-section disconnectors are closed. So for the basic project-specific logic for BBTR above, add this logic:

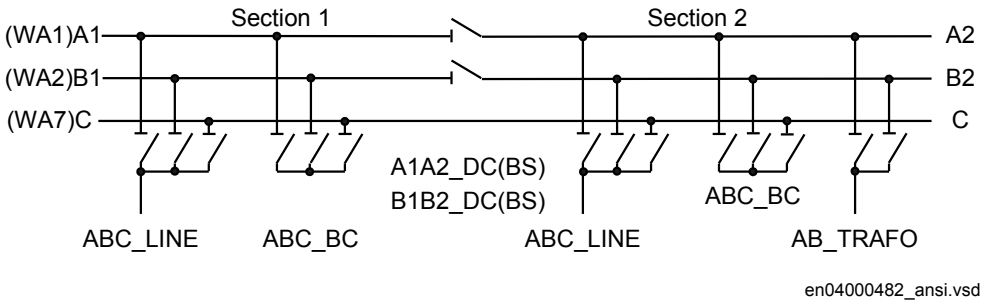

Figure 136: Busbars divided by bus-section disconnectors (circuit breakers)

The following signals from each bus-section disconnector bay (A1A2_DC) are needed. For B1B2_DC, corresponding signals from busbar B are used. The same type of module (A1A2_DC) is used for different busbars, that is, for both bus-section disconnector A1A2_DC and B1B2_DC.

Signal	
DCOPTR	The bus-section disconnector is open.
VPDCTR	The switch status of bus-section disconnector DC is valid.
EXDU_DC	No transmission error from the bay that contains the above information.

If the busbar is divided by bus-section circuit breakers, the signals from the bus-section coupler bay (A1A2_BS), rather than the bus-section disconnector bay (A1A2_DC), have to be used. For B1B2_BS, corresponding signals from busbar B are used. The same type of module (A1A2_BS) is used for different busbars, that is, for both bus-section circuit breakers A1A2_BS and B1B2_BS.

Signal	
S1S2OPTR	No bus-section coupler connection between bus-sections 1 and 2.
VPS1S2TR	The switch status of bus-section coupler BS is valid.
EXDU_BS	No transmission error from the bay that contains the above information.

For a bus-coupler bay in section 1, these conditions are valid:

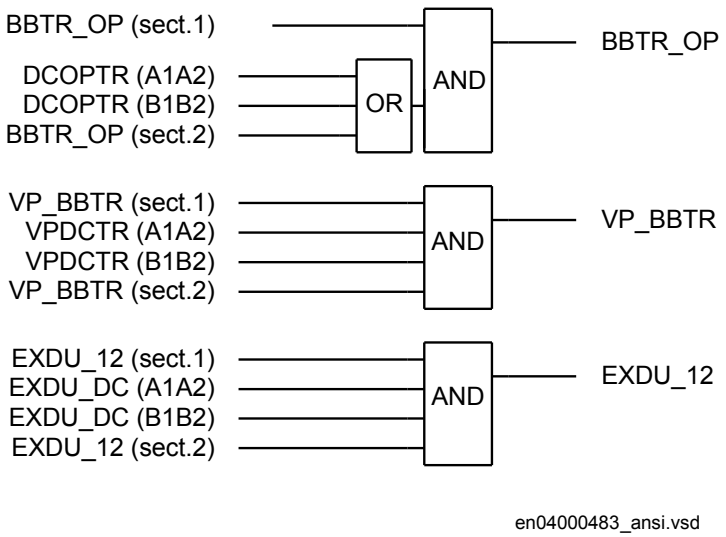

Figure 137: Signals to a bus-coupler bay in section 1 from any bays in each section

For a bus-coupler bay in section 2, the same conditions as above are valid by changing section 1 to section 2 and vice versa.

13.11.3.4 Signals from bus-coupler

If the busbar is divided by bus-section disconnectors into bus-sections, the signals BC_12 from the busbar coupler of the other busbar section must be transmitted to the own busbar coupler if both disconnectors are closed.

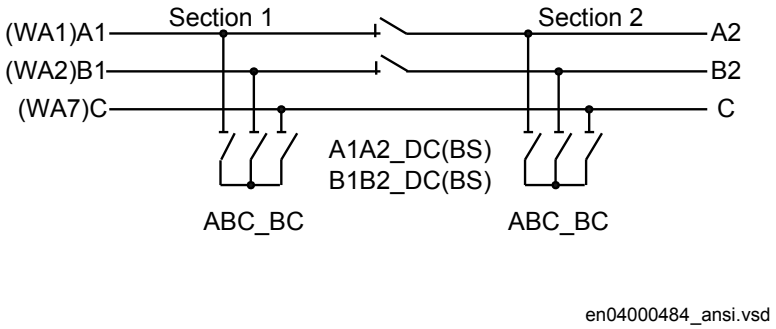

Figure 138: Busbars divided by bus-section disconnectors (circuit breakers)

To derive the signals:

Signal	
BC_12_CL	Another bus-coupler connection exists between busbar WA1 and WA2.
VP_BC_12	The switch status of BC_12 is valid.
EXDU_BC	No transmission error from any bus-coupler bay (BC).

These signals from each bus-coupler bay (ABC_BC), except the own bay, are needed:

Signal	
BC12CLTR	A bus-coupler connection through the own bus-coupler exists between busbar WA1 and WA2.
VPBC12TR	The switch status of BC_12 is valid.
EXDU_BC	No transmission error from the bay that contains the above information.

These signals from each bus-section disconnector bay (A1A2_DC) are also needed. For B1B2_DC, corresponding signals from busbar B are used. The same type of module (A1A2_DC) is used for different busbars, that is, for both bus-section disconnector A1A2_DC and B1B2_DC.

Signal	
DCCLTR	The bus-section disconnector is closed.
VPDCTR	The switch status of bus-section disconnector DC is valid.
EXDU_DC	No transmission error from the bay that contains the above information.

If the busbar is divided by bus-section circuit breakers, the signals from the bus-section coupler bay (A1A2_BS), rather than the bus-section disconnector bay (A1A2_DC), must be used. For B1B2_BS, corresponding signals from busbar B are used. The same type of module (A1A2_BS) is used for different busbars, that is, for both bus-section circuit breakers A1A2_BS and B1B2_BS.

Signal	
S1S2CLTR	A bus-section coupler connection exists between bus sections 1 and 2.
VPS1S2TR	The switch status of bus-section coupler BS is valid.
EXDU_BS	No transmission error from the bay containing the above information.

For a bus-coupler bay in section 1, these conditions are valid:

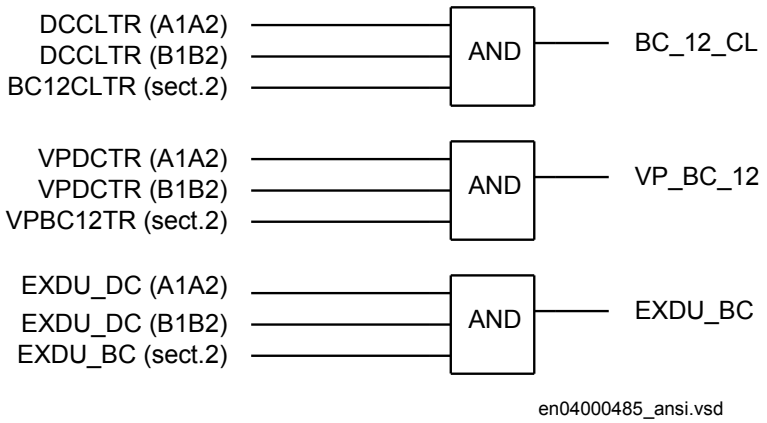

Figure 139: Signals to a bus-coupler bay in section 1 from a bus-coupler bay in another section

For a bus-coupler bay in section 2, the same conditions as above are valid by changing section 1 to section 2 and vice versa.

13.11.3.5 Configuration setting

If there is no bypass busbar and therefore no 289 and 789 disconnectors, then the interlocking for 289 and 789 is not used. The states for 289, 789, 7189G are set to open by

setting the appropriate module inputs as follows. In the functional block diagram, 0 and 1 are designated 0=FALSE and 1=TRUE:

- 289_OP = 1
- 289_CL = 0

- 789_OP = 1
- 789_CL = 0

- 7189G_OP = 1
- 7189G_CL = 0

If there is no second busbar B and therefore no 289 and 2089 disconnectors, then the interlocking for 289 and 2089 are not used. The states for 289, 2089, 2189G, BC_12, BBTR are set to open by setting the appropriate module inputs as follows. In the functional block diagram, 0 and 1 are designated 0=FALSE and 1=TRUE:

- 289_OP = 1
- 289_CL = 0

- 2089_OP = 1
- 2089_CL = 0

- 2189G_OP = 1
- 2189G_CL = 0

- BC_12_CL = 0
- VP_BC_12 = 1

- BBTR_OP = 1
- VP_BBTR = 1

13.11.4 Interlocking for transformer bay AB_TRAFO (3)

13.11.4.1 Application

The interlocking for transformer bay (AB_TRAFO, 3) function is used for a transformer bay connected to a double busbar arrangement according to figure 140. The function is used when there is no disconnector between circuit breaker and transformer. Otherwise, the interlocking for line bay (ABC_LINE, 3) function can be used. This function can also be used in single busbar arrangements.

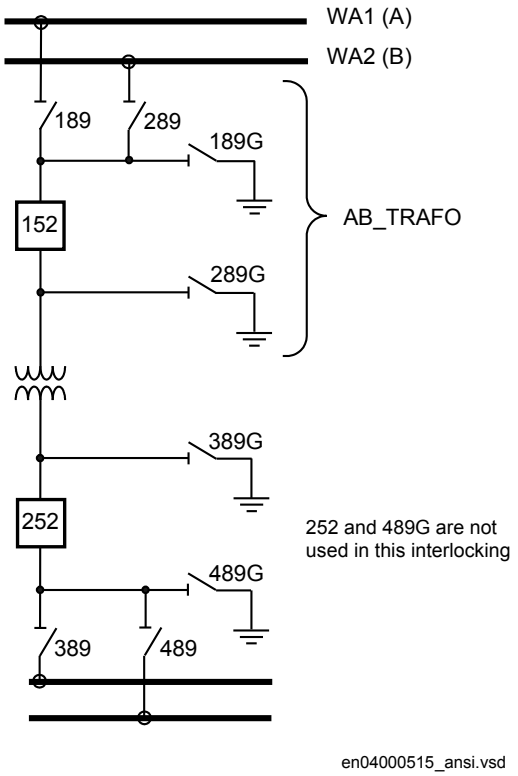

Figure 140: Switchyard layout AB_TRAFO (3)

The signals from other bays connected to the module AB_TRAFO are described below.

13.11.4.2 Signals from bus-coupler

If the busbar is divided by bus-section disconnectors into bus-sections, the busbar-busbar connection could exist via the bus-section disconnector and bus-coupler within the other bus-section.

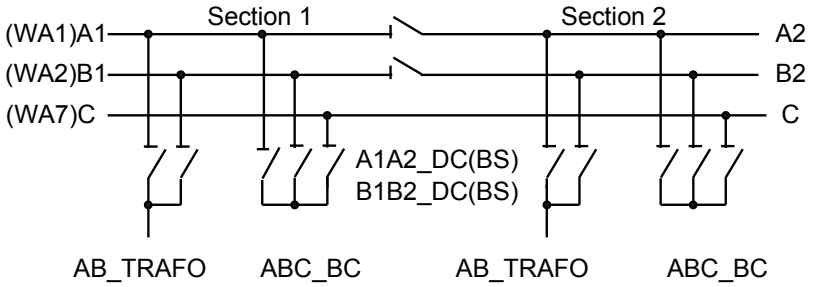

en04000487_ansi.vsd

Figure 141: Busbars divided by bus-section disconnectors (circuit breakers)

The project-specific logic for input signals concerning bus-coupler are the same as the specific logic for the line bay (ABC_LINE):

Signal	
BC_12_CL	A bus-coupler connection exists between busbar WA1 and WA2.
VP_BC_12	The switch status of BC_12 is valid.
EXDU_BC	No transmission error from bus-coupler bay (BC).

The logic is identical to the double busbar configuration “Signals from bus-coupler“.

13.11.4.3 Configuration setting

If there are no second busbar B and therefore no 289 disconnector, then the interlocking for 289 is not used. The state for 289, 2189G, BC_12 are set to open by setting the appropriate module inputs as follows. In the functional block diagram, 0 and 1 are designated 0=FALSE and 1=TRUE:

- 289_OP = 1
- 289QB2_CL = 0

- 2189G_OP = 1
- 2189G_CL = 0

- BC_12_CL = 0
- VP_BC_12 = 1

If there is no second busbar B at the other side of the transformer and therefore no 489 disconnector, then the state for 489 is set to open by setting the appropriate module inputs as follows:

- 489_OP = 1
- 489_CL = 0

13.11.5 Interlocking for bus-section breaker A1A2_BS (3)

13.11.5.1 Application

The interlocking for bus-section breaker (A1A2_BS ,3) function is used for one bus-section circuit breaker between section 1 and 2 according to figure 142. The function can be used for different busbars, which includes a bus-section circuit breaker.

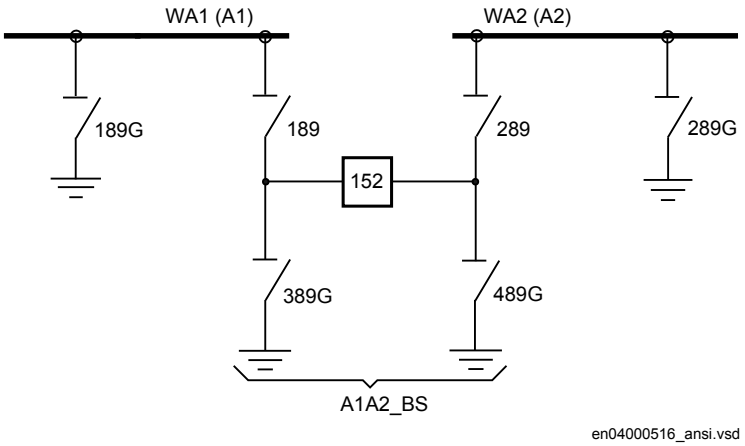

Figure 142: Switchyard layout A1A2_BS (3)

The signals from other bays connected to the module A1A2_BS are described below.

13.11.5.2 Signals from all feeders

If the busbar is divided by bus-section circuit breakers into bus-sections and both circuit breakers are closed, the opening of the circuit breaker must be blocked if a bus-coupler connection exists between busbars on one bus-section side and if on the other bus-section side a busbar transfer is in progress:

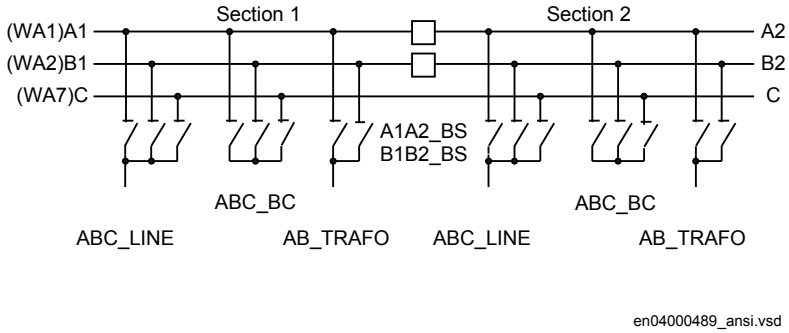

Figure 143: Busbars divided by bus-section circuit breakers

To derive the signals:

Signal	
BBTR_OP	No busbar transfer is in progress concerning this bus-section.
VP_BBTR	The switch status of BBTR is valid.
EXDU_12	No transmission error from any bay connected to busbar 1(A) and 2(B).

These signals from each line bay (ABC_LINE), each transformer bay (AB_TRAFO), and bus-coupler bay (ABC_BC) are needed:

Signal	
1289OPTR	189 or 289 or both are open.
VP1289TR	The switch status of 189 and 289 are valid.
EXDU_12	No transmission error from the bay that contains the above information.

These signals from each bus-coupler bay (ABC_BC) are needed:

Signal	
BC12OPTR	No bus-coupler connection through the own bus-coupler between busbar WA1 and WA2.
VPBC12TR	The switch status of BC_12 is valid.
EXDU_BC	No transmission error from the bay that contains the above information.

These signals from the bus-section circuit breaker bay (A1A2_BS, B1B2_BS) are needed.

Signal	
S1S2OPTR	No bus-section coupler connection between bus-sections 1 and 2.
VPS1S2TR	The switch status of bus-section coupler BS is valid.
EXDU_BS	No transmission error from the bay that contains the above information.

For a bus-section circuit breaker between A1 and A2 section busbars, these conditions are valid:

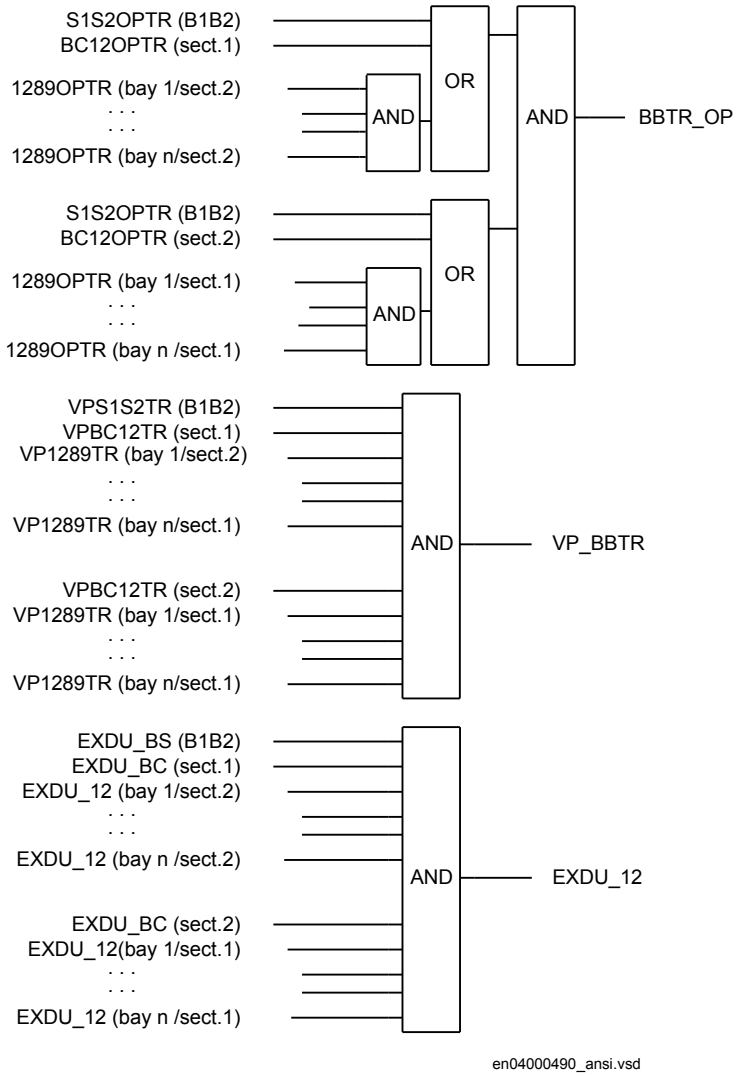

Figure 144: Signals from any bays for a bus-section circuit breaker between sections A1 and A2

For a bus-section circuit breaker between B1 and B2 section busbars, these conditions are valid:

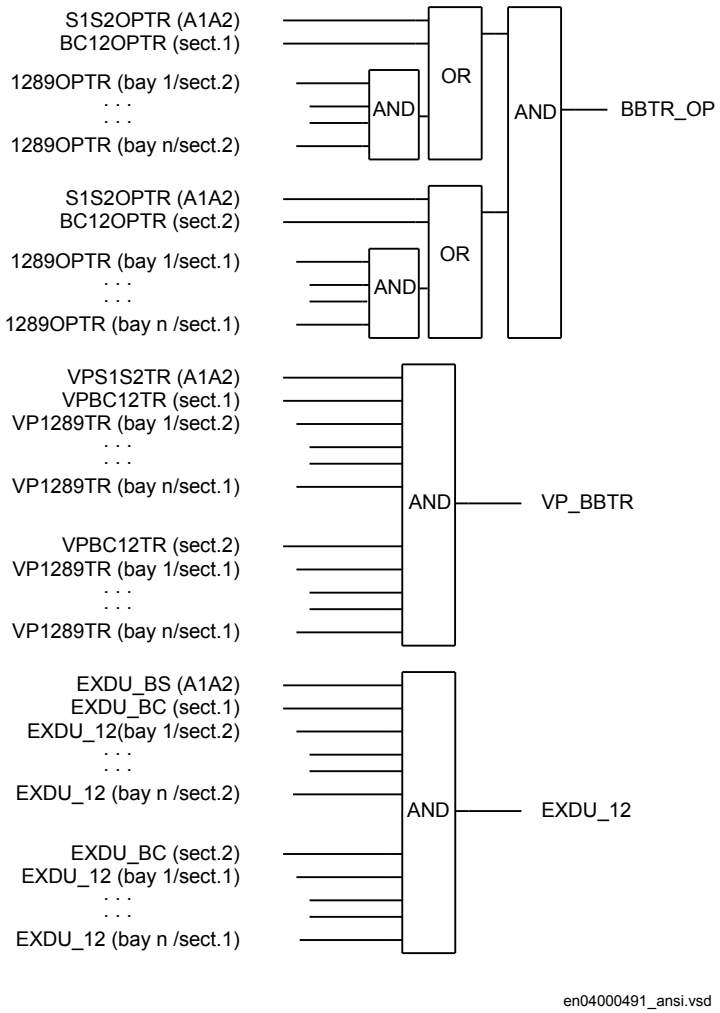

Figure 145: Signals from any bays for a bus-section circuit breaker between sections B1 and B2

13.11.5.3 Configuration setting

If there is no other busbar via the busbar loops that are possible, then either the interlocking for the 152 open circuit breaker is not used or the state for BBTR is set to open. That is, no busbar transfer is in progress in this bus-section:

- BBTR_OP = 1
- VP_BBTR = 1

13.11.6 Interlocking for bus-section disconnector A1A2_DC (3)

13.11.6.1 Application

The interlocking for bus-section disconnector (A1A2_DC, 3) function is used for one bus-section disconnector between section 1 and 2 according to figure 146. A1A2_DC (3) function can be used for different busbars, which includes a bus-section disconnector.

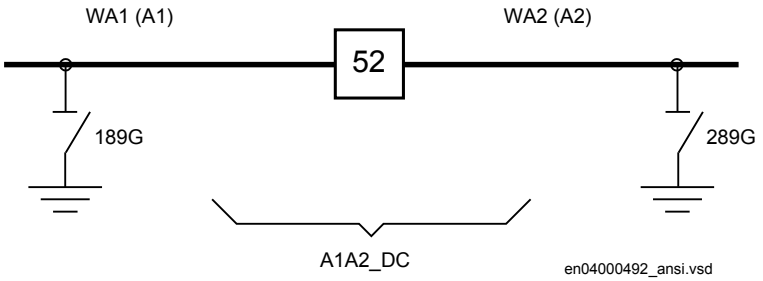

Figure 146: Switchyard layout A1A2_DC (3)

The signals from other bays connected to the module A1A2_DC are described below.

13.11.6.2 Signals in single breaker arrangement

If the busbar is divided by bus-section disconnectors, the condition *no other disconnector connected to the bus-section* must be made by a project-specific logic.

The same type of module (A1A2_DC) is used for different busbars, that is, for both bus-section disconnector A1A2_DC and B1B2_DC. But for B1B2_DC, corresponding signals from busbar B are used.

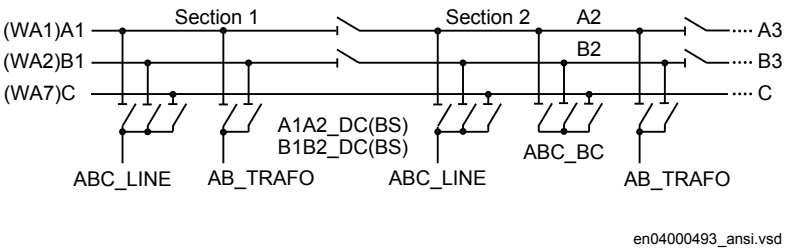

Figure 147: Busbars divided by bus-section disconnectors (circuit breakers)

To derive the signals:

Signal	
S1DC_OP	All disconnectors on bus-section 1 are open.
S2DC_OP	All disconnectors on bus-section 2 are open.
VPS1_DC	The switch status of disconnectors on bus-section 1 is valid.
VPS2_DC	The switch status of disconnectors on bus-section 2 is valid.
EXDU_BB	No transmission error from any bay that contains the above information.

These signals from each line bay (ABC_LINE), each transformer bay (AB_TRAFO), and each bus-coupler bay (ABC_BC) are needed:

Signal	
189OPTR	189 is open.
289OPTR	289 is open (AB_TRAFO, ABC_LINE).
22089OTR	289 and 2089 are open (ABC_BC).
VP189TR	The switch status of 189 is valid.
VP289TR	The switch status of 289 is valid.
V22089TR	The switch status of 289 and 2089 are valid.
EXDU_BB	No transmission error from the bay that contains the above information.

If there is an additional bus-section disconnector, the signal from the bus-section disconnector bay (A1A2_DC) must be used:

Signal	
DCOPTR	The bus-section disconnector is open.
VPDCTR	The switch status of bus-section disconnector DC is valid.
EXDU_DC	No transmission error from the bay that contains the above information.

If there is an additional bus-section circuit breaker rather than an additional bus-section disconnector the signals from the bus-section, circuit-breaker bay (A1A2_BS) rather than the bus-section disconnector bay (A1A2_DC) must be used:

Signal	
189OPTR	189 is open.
289OPTR	289 is open.
VP189TR	The switch status of 189 is valid.
VP289TR	The switch status of 289 is valid.
EXDU_BS	No transmission error from the bay BS (bus-section coupler bay) that contains the above information.

For a bus-section disconnector, these conditions from the A1 busbar section are valid:

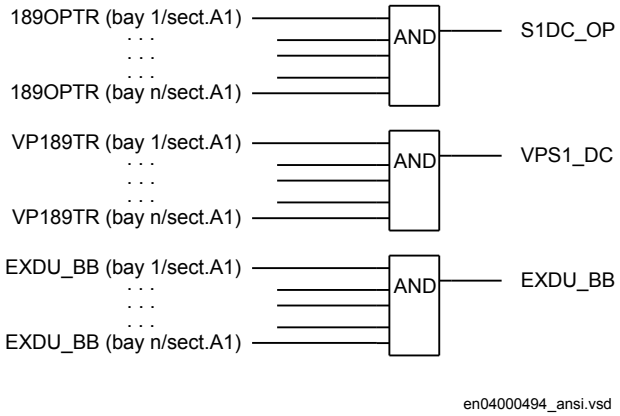

Figure 148: Signals from any bays in section A1 to a bus-section disconnector

For a bus-section disconnector, these conditions from the A2 busbar section are valid:

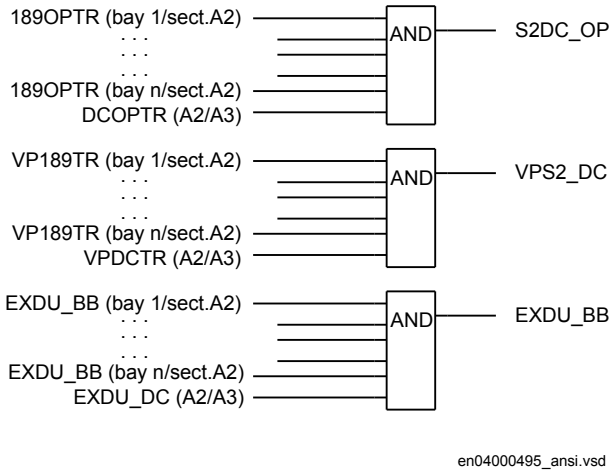

Figure 149: Signals from any bays in section A2 to a bus-section disconnector

For a bus-section disconnector, these conditions from the B1 busbar section are valid:

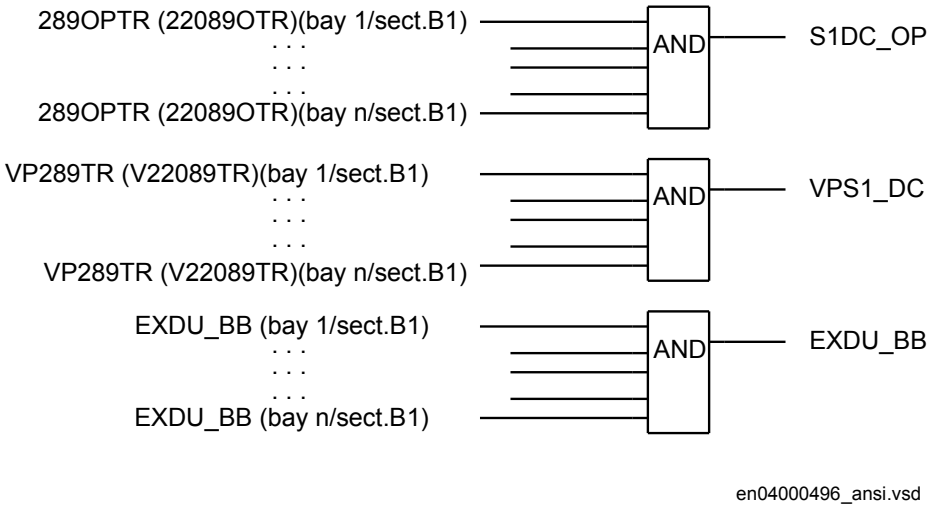

Figure 150: Signals from any bays in section B1 to a bus-section disconnector

For a bus-section disconnector, these conditions from the B2 busbar section are valid:

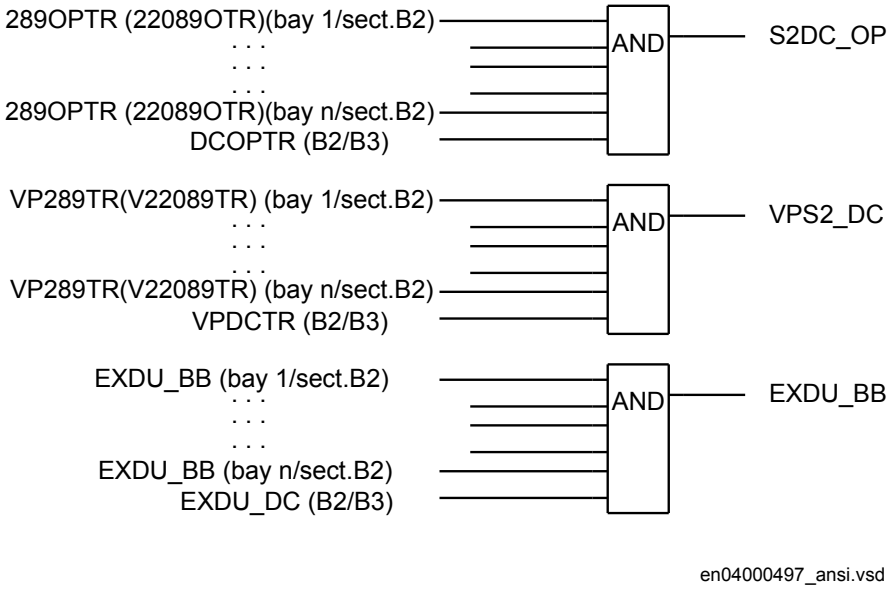

Figure 151: Signals from any bays in section B2 to a bus-section disconnector

13.11.6.3 Signals in double-breaker arrangement

If the busbar is divided by bus-section disconnectors, the condition for the busbar disconnector bay *no other disconnector connected to the bus-section* must be made by a project-specific logic.

The same type of module (A1A2_DC) is used for different busbars, that is, for both bus-section disconnector A1A2_DC and B1B2_DC. But for B1B2_DC, corresponding signals from busbar B are used.

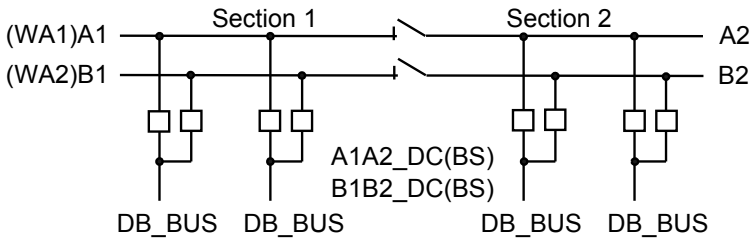

en04000498_ansi.vsd

Figure 152: Busbars divided by bus-section disconnectors (circuit breakers)

To derive the signals:

Signal	
S1DC_OP	All disconnectors on bus-section 1 are open.
S2DC_OP	All disconnectors on bus-section 2 are open.
VPS1_DC	The switch status of all disconnectors on bus-section 1 is valid.
VPS2_DC	The switch status of all disconnectors on bus-section 2 is valid.
EXDU_BB	No transmission error from double-breaker bay (DB) that contains the above information.

These signals from each double-breaker bay (DB_BUS) are needed:

Signal	
189OPTR	189 is open.
289OPTR	289 is open.
VP189TR	The switch status of 189 is valid.
VP289TR	The switch status of 289 is valid.
EXDU_DB	No transmission error from the bay that contains the above information.

The logic is identical to the double busbar configuration “Signals in single breaker arrangement”.

For a bus-section disconnector, these conditions from the A1 busbar section are valid:

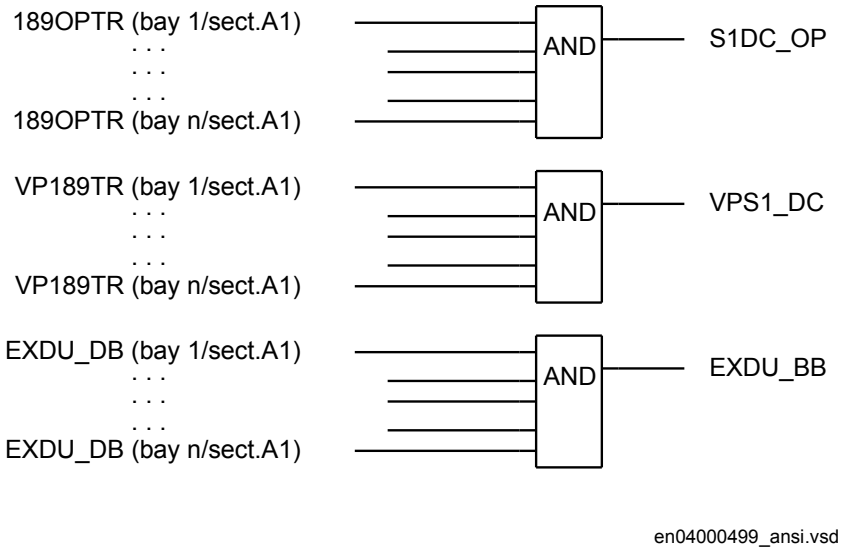

Figure 153: Signals from double-breaker bays in section A1 to a bus-section disconnector

For a bus-section disconnector, these conditions from the A2 busbar section are valid:

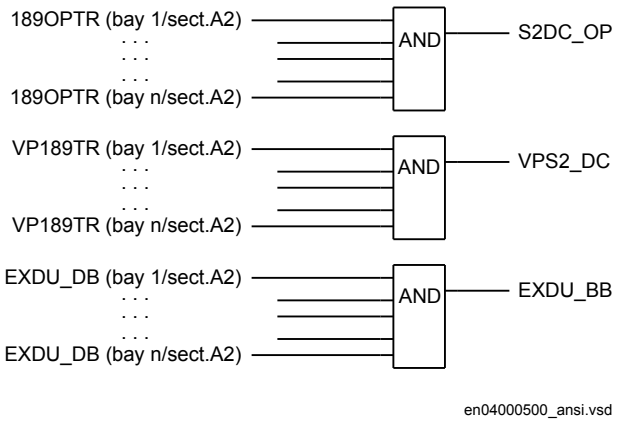

Figure 154: Signals from double-breaker bays in section A2 to a bus-section disconnector

For a bus-section disconnector, these conditions from the B1 busbar section are valid:

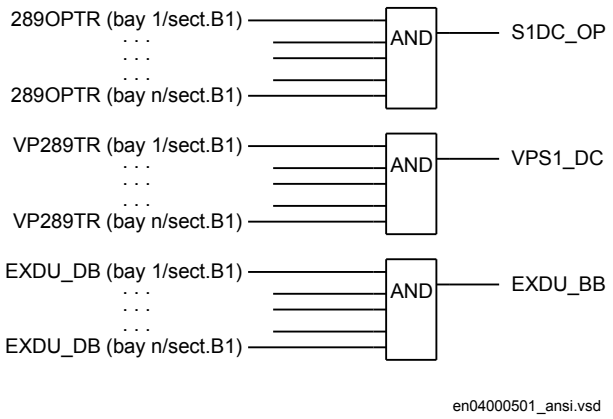

Figure 155: Signals from double-breaker bays in section B1 to a bus-section disconnector

For a bus-section disconnector, these conditions from the B2 busbar section are valid:

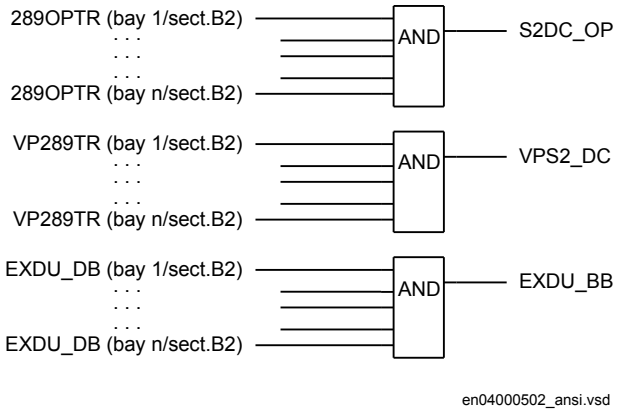

Figure 156: Signals from double-breaker bays in section B2 to a bus-section disconnector

13.11.6.4 Signals in breaker and a half arrangement

If the busbar is divided by bus-section disconnectors, the condition for the busbar disconnector bay *no other disconnector connected to the bus-section* must be made by a project-specific logic.

The same type of module (A1A2_DC) is used for different busbars, that is, for both bus-section disconnector A1A2_DC and B1B2_DC. But for B1B2_DC, corresponding signals from busbar B are used.

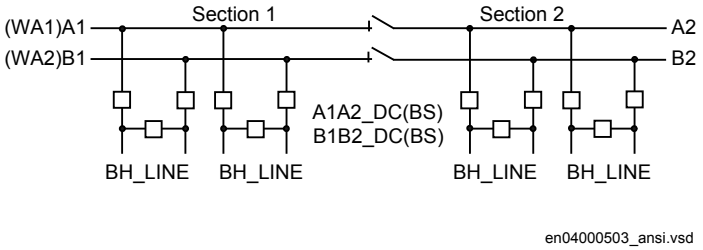

Figure 157: Busbars divided by bus-section disconnectors (circuit breakers)

The project-specific logic is the same as for the logic for the double-breaker configuration.

Signal	
S1DC_OP	All disconnectors on bus-section 1 are open.
S2DC_OP	All disconnectors on bus-section 2 are open.
VPS1_DC	The switch status of disconnectors on bus-section 1 is valid.
VPS2_DC	The switch status of disconnectors on bus-section 2 is valid.
EXDU_BB	No transmission error from breaker and a half (BH) that contains the above information.

13.11.7 Interlocking for busbar grounding switch BB_ES (3)

13.11.7.1 Application

The interlocking for busbar grounding switch (BB_ES, 3) function is used for one busbar grounding switch on any busbar parts according to figure 158.

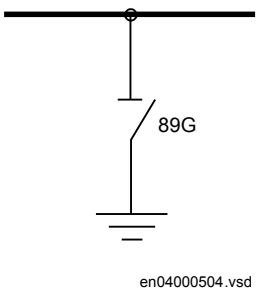

Figure 158: Switchyard layout BB_ES (3)

The signals from other bays connected to the module BB_ES are described below.

13.11.7.2 Signals in single breaker arrangement

The busbar grounding switch is only allowed to operate if all disconnectors of the bus-section are open.

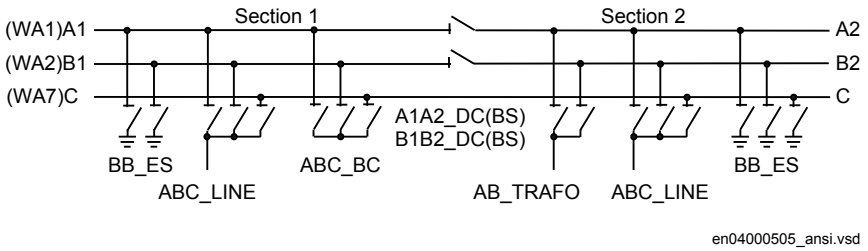

Figure 159: Busbars divided by bus-section disconnectors (circuit breakers)

To derive the signals:

Signal	
BB_DC_OP	All disconnectors on this part of the busbar are open.
VP_BB_DC	The switch status of all disconnector on this part of the busbar is valid.
EXDU_BB	No transmission error from any bay containing the above information.

These signals from each line bay (ABC_LINE), each transformer bay (AB_TRAFO), and each bus-coupler bay (ABC_BC) are needed:

Signal	
189OPTR	189 is open.
289OPTR	289 is open (AB_TRAFO, ABC_LINE)
22089OTR	289 and 2089 are open (ABC_BC)
789OPTR	789 is open.
VP189TR	The switch status of 189 is valid.
VP289TR	The switch status of 289 is valid.
V22089TR	The switch status of 289and 2089 is valid.
VP789TR	The switch status of 789 is valid.
EXDU_BB	No transmission error from the bay that contains the above information.

These signals from each bus-section disconnector bay (A1A2_DC) are also needed. For B1B2_DC, corresponding signals from busbar B are used. The same type of module (A1A2_DC) is used for different busbars, that is, for both bus-section disconnectors A1A2_DC and B1B2_DC.

Signal	
DCOPTR	The bus-section disconnector is open.
VPDCTR	The switch status of bus-section disconnector DC is valid.
EXDU_DC	No transmission error from the bay that contains the above information.

If no bus-section disconnector exists, the signal DCOPTR, VPDCTR and EXDU_DC are set to 1 (TRUE).

If the busbar is divided by bus-section circuit breakers, the signals from the bus-section coupler bay (A1A2_BS) rather than the bus-section disconnector bay (A1A2_DC) must be used. For B1B2_BS, corresponding signals from busbar B are used. The same type of module (A1A2_BS) is used for different busbars, that is, for both bus-section circuit breakers A1A2_BS and B1B2_BS.

Signal	
189OPTR	189 is open.
289OPTR	289 is open.
VP189TR	The switch status of 189 is valid.
VP289TR	The switch status of 289 is valid.
EXDU_BS	No transmission error from the bay BS (bus-section coupler bay) that contains the above information.

For a busbar grounding switch, these conditions from the A1 busbar section are valid:

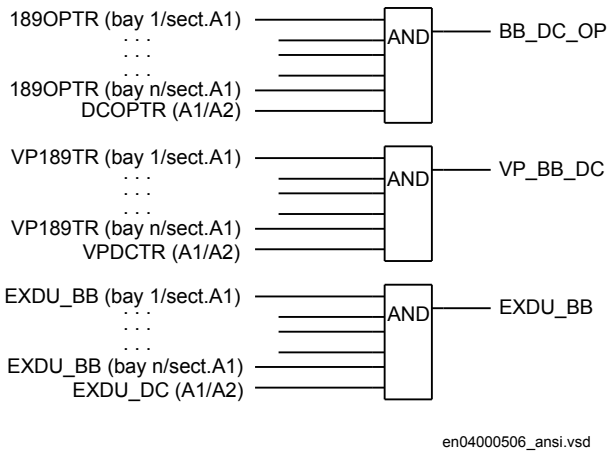

Figure 160: Signals from any bays in section A1 to a busbar grounding switch in the same section

For a busbar grounding switch, these conditions from the A2 busbar section are valid:

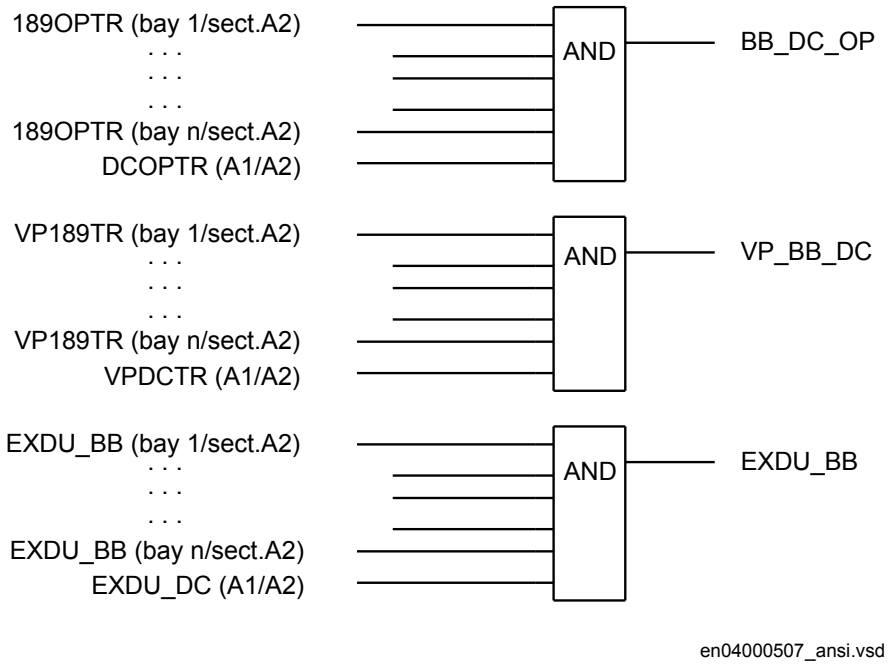

Figure 161: Signals from any bays in section A2 to a busbar grounding switch in the same section

For a busbar grounding switch, these conditions from the B1 busbar section are valid:

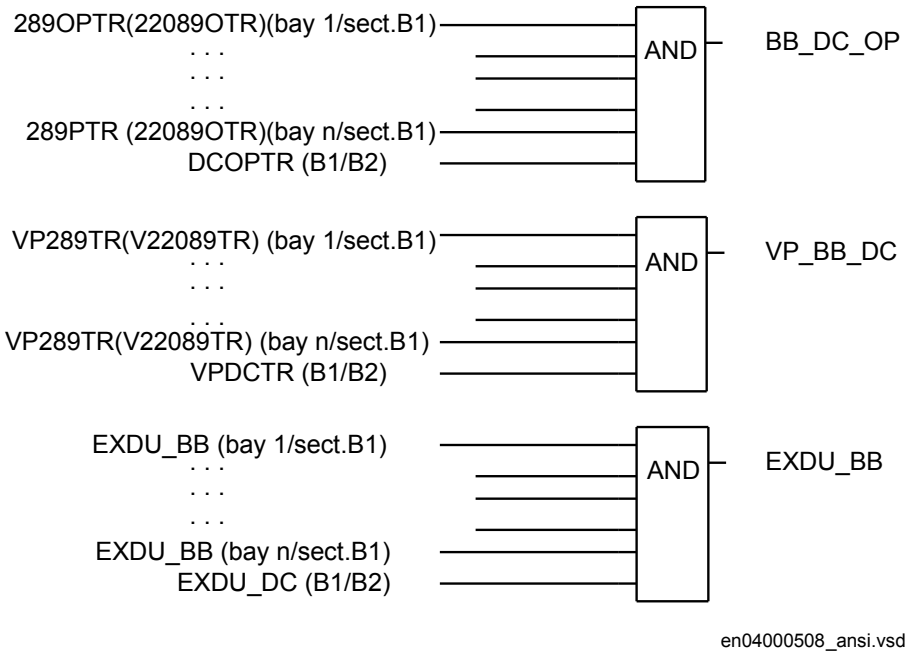

Figure 162: Signals from any bays in section B1 to a busbar grounding switch in the same section

For a busbar grounding switch, these conditions from the B2 busbar section are valid:

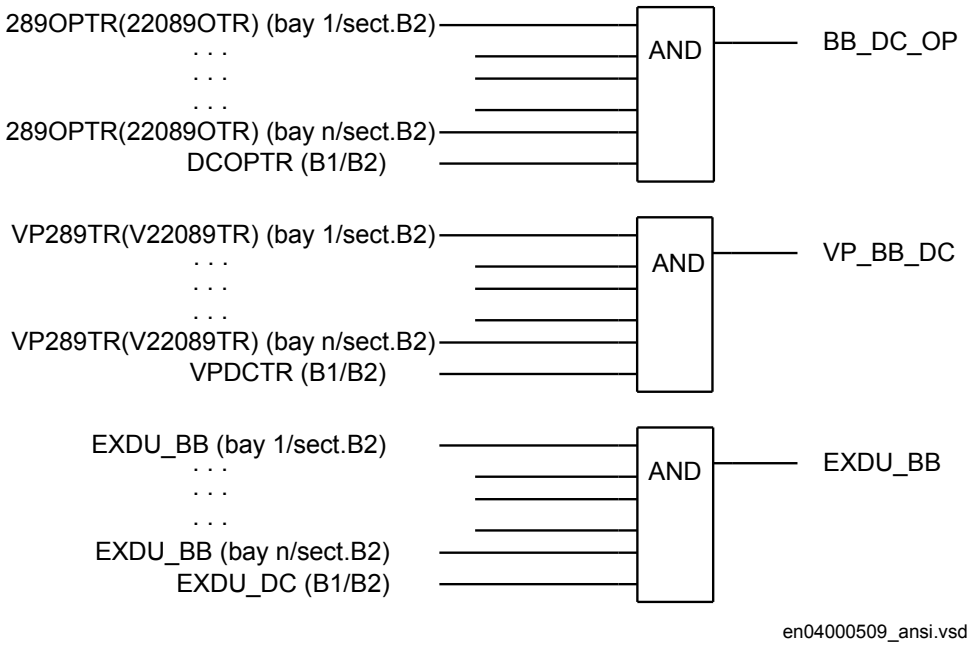

Figure 163: Signals from any bays in section B2 to a busbar grounding switch in the same section

For a busbar grounding switch on bypass busbar C, these conditions are valid:

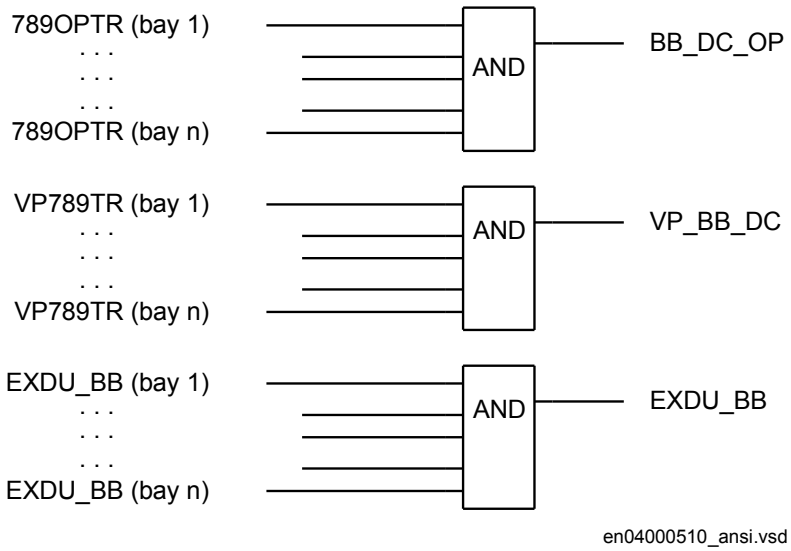

Figure 164: Signals from bypass busbar to busbar grounding switch

13.11.7.3 Signals in double-breaker arrangement

The busbar grounding switch is only allowed to operate if all disconnectors of the bus section are open.

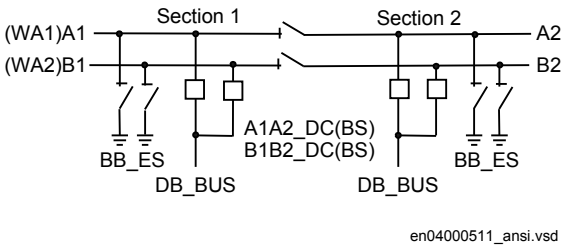

Figure 165: Busbars divided by bus-section disconnectors (circuit breakers)

To derive the signals:

Signal	
BB_DC_OP	All disconnectors of this part of the busbar are open.
VP_BB_DC	The switch status of all disconnectors on this part of the busbar are valid.
EXDU_BB	No transmission error from any bay that contains the above information.

These signals from each double-breaker bay (DB_BUS) are needed:

Signal	
189OPTR	189 is open.
289OPTR	289 is open.
VP189TR	The switch status of 189 is valid.
VP289TR	The switch status of 289 is valid.
EXDU_DB	No transmission error from the bay that contains the above information.

These signals from each bus-section disconnector bay (A1A2_DC) are also needed. For B1B2_DC, corresponding signals from busbar B are used. The same type of module (A1A2_DC) is used for different busbars, that is, for both bus-section disconnectors A1A2_DC and B1B2_DC.

Signal	
DCOPTR	The bus-section disconnector is open.
VPDCTR	The switch status of bus-section disconnector DC is valid.
EXDU_DC	No transmission error from the bay that contains the above information.

The logic is identical to the double busbar configuration described in section “Signals in single breaker arrangement”.

13.11.7.4 Signals in breaker and a half arrangement

The busbar grounding switch is only allowed to operate if all disconnectors of the bus-section are open.

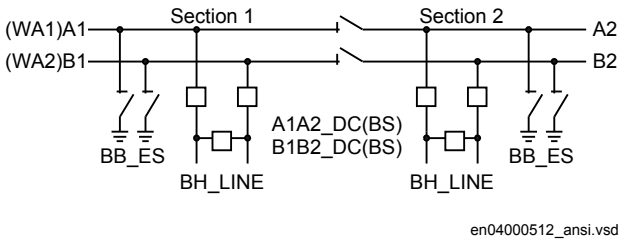

Figure 166: Busbars divided by bus-section disconnectors (circuit breakers)

The project-specific logic are the same as for the logic for the double busbar configuration described in section “Signals in single breaker arrangement”.

Signal	
BB_DC_OP	All disconnectors on this part of the busbar are open.
VP_BB_DC	The switch status of all disconnectors on this part of the busbar is valid.
EXDU_BB	No transmission error from any bay that contains the above information.

13.11.8 Interlocking for double CB bay DB (3)

13.11.8.1 Application

The interlocking for a double busbar double circuit breaker bay including DB_BUS_A (3), DB_BUS_B (3) and DB_LINE (3) functions are used for a line connected to a double busbar arrangement according to figure 167.

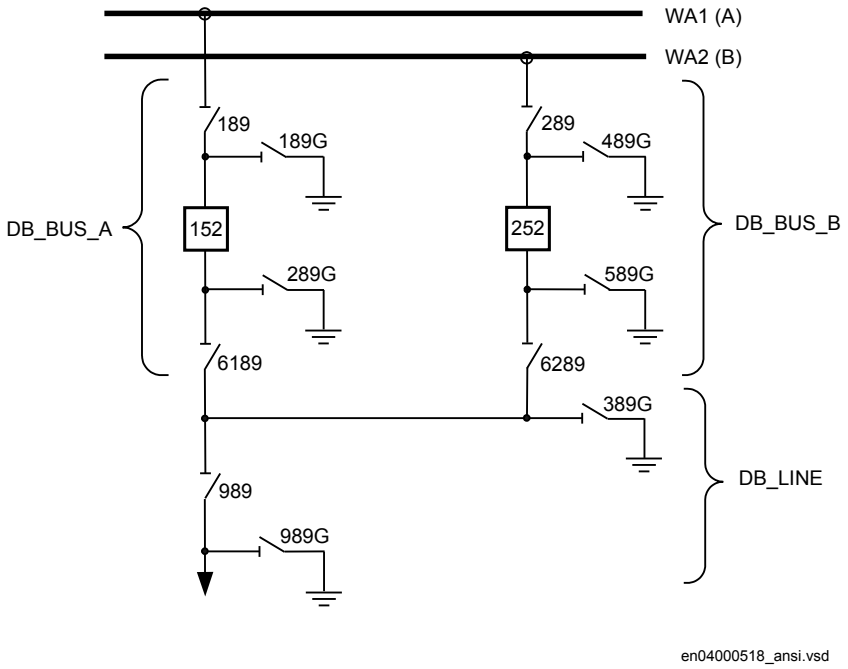

Figure 167: Switchyard layout double circuit breaker

Three types of interlocking modules per double circuit breaker bay are defined. DB_BUS_A (3) handles the circuit breaker QA1 that is connected to busbar WA1 and the disconnectors and earthing switches of this section. DB_BUS_B (3) handles the circuit breaker QA2 that is connected to busbar WA2 and the disconnectors and earthing switches of this section.

For a double circuit-breaker bay, the modules DB_BUS_A, DB_LINE and DB_BUS_B must be used.

13.11.8.2 Configuration setting

For application without 989 and 989G, just set the appropriate inputs to open state and disregard the outputs. In the functional block diagram, 0 and 1 are designated 0=FALSE and 1=TRUE:

- 989_OP = 1
- 989_CL = 0

- 989G_OP = 1
- 989G_CL = 0

If, in this case, line voltage supervision is added, then rather than setting 989 to open state, specify the state of the voltage supervision:

- 989_OP = VOLT_OFF
- 989_CL = VOLT_ON

If there is no voltage supervision, then set the corresponding inputs as follows:

- VOLT_OFF = 1
- VOLT_ON = 0

13.11.9 Interlocking for breaker-and-a-half diameter BH (3)

13.11.9.1 Application

The interlocking for breaker-and-a-half diameter (BH_CONN(3), BH_LINE_A(3), BH_LINE_B(3)) functions are used for lines connected to a breaker-and-a-half diameter according to figure 168.

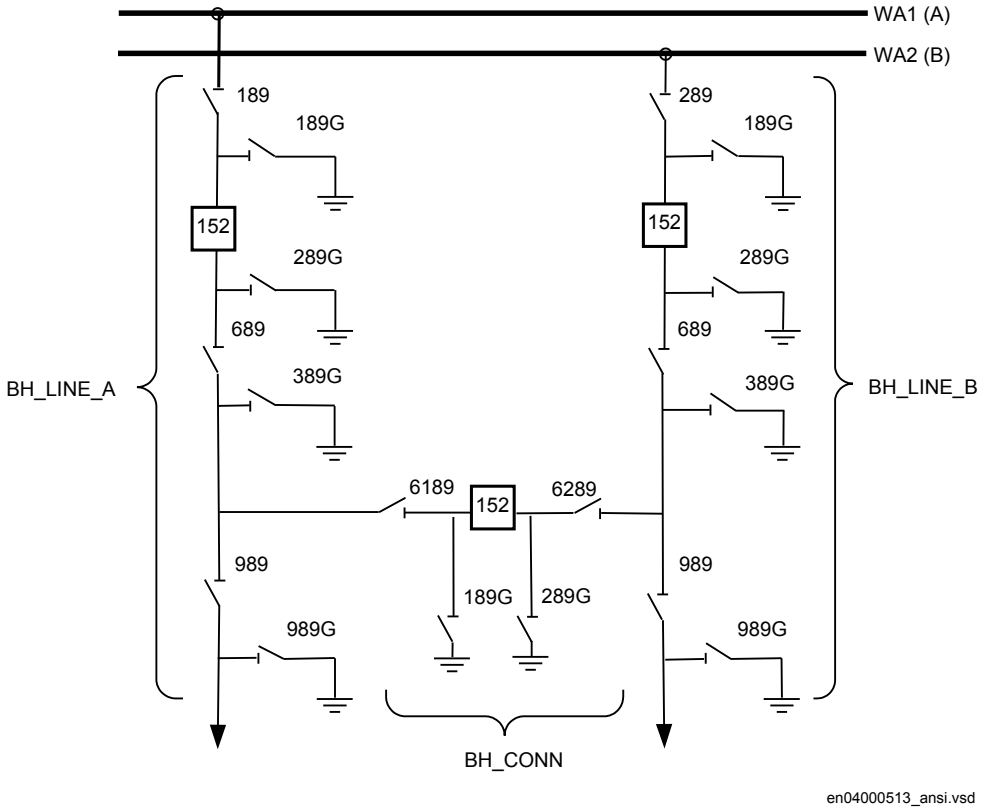

Figure 168: Switchyard layout breaker-and-a-half

Three types of interlocking modules per diameter are defined. BH_LINE_A (3) and BH_LINE_B (3) are the connections from a line to a busbar. BH_CONN (3) is the connection between the two lines of the diameter in the breaker-and-a-half switchyard layout.

For a breaker-and-a-half arrangement, the modules BH_LINE_A, BH_CONN and BH_LINE_B must be used.

13.11.9.2 Configuration setting

For application without 989 and 989G, just set the appropriate inputs to open state and disregard the outputs. In the functional block diagram, 0 and 1 are designated 0=FALSE and 1=TRUE:

- 989_OP = 1
- 989_CL = 0

- 989G_OP = 1
- 989G_CL = 0

If, in this case, line voltage supervision is added, then rather than setting 989 to open state, specify the state of the voltage supervision:

- 989_OP = VOLT_OFF
- 989_CL = VOLT_ON

If there is no voltage supervision, then set the corresponding inputs as follows:

- VOLT_OFF = 1
- VOLT_ON = 0

13.11.10 Horizontal communication via GOOSE for interlocking GOOSEINTLKRCV

Table 34: GOOSEINTLKRCV Non group settings (basic)

Name	Values (Range)	Unit	Step	Default	Description
Operation	Disabled Enabled	-	-	Disabled	Operation Disabled/Enabled

Section 14 Scheme communication

14.1 Scheme communication logic for distance or overcurrent protection ZCPSCH(85)

14.1.1 Identification

Function description	IEC 61850 identification	IEC 60617 identification	ANSI/IEEE C37.2 device number
Scheme communication logic for distance or overcurrent protection	ZCPSCH	-	85

14.1.2 Application

To achieve fast fault clearing for a fault on the part of the line not covered by the instantaneous zone 1, the stepped distance protection function can be supported with logic, that uses communication channels.

One communication channel in each direction, which can transmit an on/off signal is required. The performance and security of this function is directly related to the transmission channel speed, and security against false or lost signals. For this reason special channels are used for this purpose. When power line carrier is used for communication, these special channels are strongly recommended due to the communication disturbance caused by the primary fault.

Communication speed, or minimum time delay, is always of utmost importance because the purpose for using communication is to improve the tripping speed of the scheme.

To avoid false signals that could cause false tripping, it is necessary to pay attention to the security of the communication channel. At the same time it is important pay attention to the communication channel dependability to ensure that proper signals are communicated during power system faults, the time during which the protection schemes must perform their tasks flawlessly.

The logic supports the following communications schemes; blocking scheme, permissive schemes (overreaching and underreaching), unblocking scheme and direct intertrip.

A permissive scheme is inherently faster and has better security against false tripping than a blocking scheme. On the other hand, permissive scheme depends on a received CR signal for a fast trip, so its dependability is lower than that of a blocking scheme.

14.1.2.1 Blocking schemes

In blocking scheme a reverse looking zone is used to send a block signal to remote end to block an overreaching zone.

Since the scheme is sending the blocking signal during conditions where the protected line is healthy, it is common to use the line itself as communication media (PLC). The scheme can be used on all line lengths.

The blocking scheme is very dependable because it will operate for faults anywhere on the protected line if the communication channel is out of service. On the other hand, it is less secure than permissive schemes because it will trip for external faults within the reach of the tripping function if the communication channel is out of service.

Inadequate speed or dependability can cause spurious tripping for external faults. Inadequate security can cause delayed tripping for internal faults.

To secure that the send signal will arrive before the zone used in the communication scheme will trip, the trip is released first after the time delay *tCoord* has elapsed. The setting of *tCoord* must be set longer than the maximal transmission time of the channel. A security margin of at least 10 ms should be considered.

The timer *tSendMin* for prolonging the send signal is proposed to set to zero.

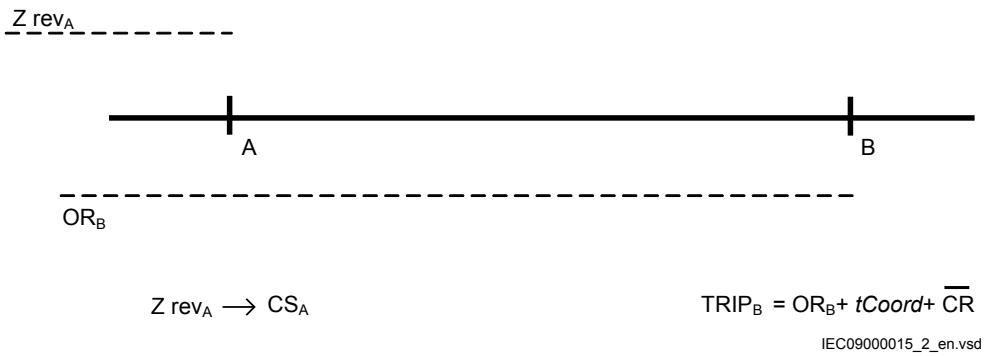

Figure 169: Principle of blocking scheme

OR:	Overreaching
CR:	Communication signal received
CS:	Communication signal send
Z rev$_A$:	Reverse zone

14.1.2.2 Permissive schemes

In permissive scheme permission to trip is sent from local end to remote end(s), that is protection at local end have detected a fault on the protected object. The received signal(s) is combined with an overreaching zone and gives an instantaneous trip if the received signal is present during the time the chosen zone is detected a fault in forward direction.

Either end may send a permissive (or command) signal to trip to the other end(s), and the teleprotection equipment need to be able to receive while transmitting.

A general requirement on permissive schemes is that it shall be fast and secure.

Depending on if the sending signal(s) is issued by underreaching or overreaching zone, it is divided into Permissive underreach or Permissive overreach scheme.

Permissive underreaching scheme

Permissive underreaching scheme is not suitable to use on short line length due to difficulties for distance protection measurement in general to distinguish between internal and external faults in those applications.

The underreaching zones at local and remote end(s) must overlap in reach to prevent a gap between the protection zones where faults would not be detected. If the underreaching zone do not meet required sensitivity due to for instance fault infeed from remote end blocking or permissive overreaching scheme should be considered.

The received signal (CR) must be received when the overreaching zone is still activated to achieve an instantaneous trip. In some cases, due to the fault current distribution, the overreaching zone can operate only after the fault has been cleared at the terminal nearest to the fault. There is a certain risk that in case of a trip from an independent tripping zone, the zone issuing the send signal (CS) resets before the overreaching zone has operated at the remote terminal. To assure a sufficient duration of the received signal (CR), the send signal (CS), can be prolonged by a *tSendMin* reset timer. The recommended setting of *tSendMin* is 100 ms.

Since the received communication signal is combined with the output from an overreaching zone, there is less concern about false signal causing an incorrect trip. Therefore set the timer *tCoord* to zero.

Failure of the communication channel does not affect the selectivity, but delays tripping at one end(s) for certain fault locations.

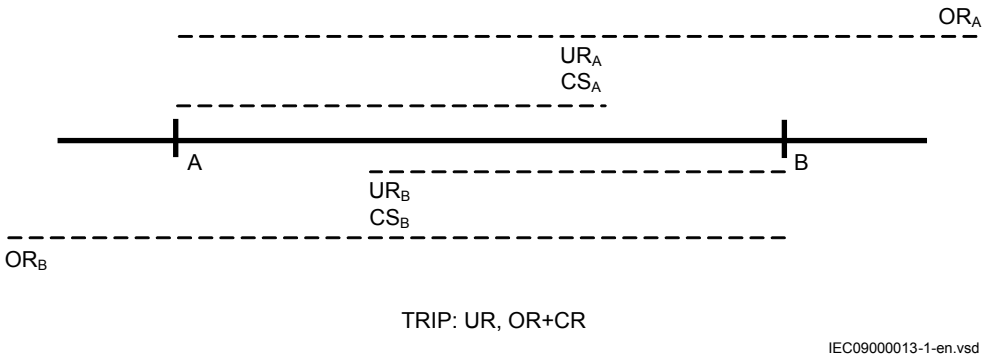

Figure 170: Principle of Permissive underreaching scheme

UR: Underreaching

OR: Overreaching

CR: Communication signal received

CS: Communication signal send

Permissive overreaching scheme

In permissive overreaching scheme there is an overreaching zone that issues the send signal. At remote end the received signal together with activating of an overreaching zone gives instantaneous trip of the protected object. The overreaching zone used in the teleprotection scheme must be activated at the same time as the received signal is present. The scheme can be used for all line lengths.

In permissive overreaching schemes, the communication channel plays an essential roll to obtain fast tripping at both ends. Failure of the communication channel may affect the selectivity and delay tripping at one end at least, for faults anywhere along the protected circuit.

Teleprotection operating in permissive overreaching scheme must beside the general requirement of fast and secure operation also consider requirement on dependability. Inadequate security can cause unwanted tripping for external faults. Inadequate speed or dependability can cause delayed tripping for internal faults or even unwanted operations.

This scheme may use virtually any communication media that is not adversely affected by electrical interference from fault generated noise or by electrical phenomena, such as lightning, that cause faults. Communication media that uses metallic path are particularly subjected to this type of interference, therefore, they must be properly shielded or otherwise designed to provide an adequate communication signal during power system faults.

At the permissive overreaching scheme, the send signal (CS) might be issued in parallel both from an overreaching zone and an underreaching, independent tripping zone. The CS signal from the overreaching zone must not be prolonged while the CS signal from zone 1 can be prolonged.

To secure correct operations of current reversal logic in case of parallel lines, when applied, the send signal CS shall not be prolonged. So set the *tSendMin* to zero in this case.

There is no need to delay the trip at receipt of the signal, so set the timer *tCoord* to zero.

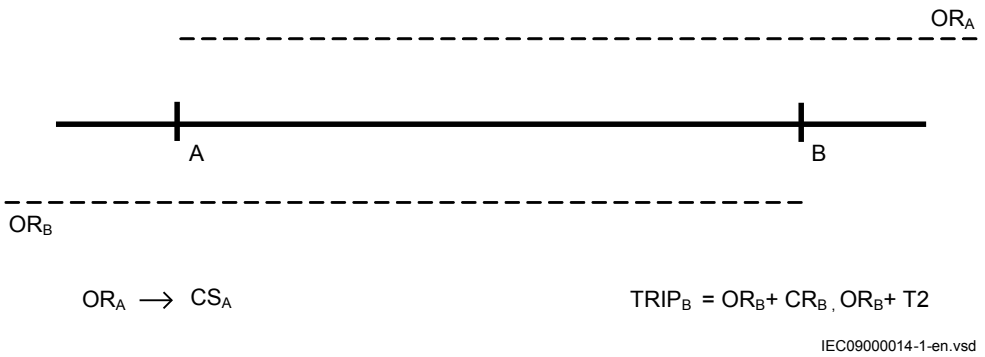

Figure 171: Principle of Permissive overreaching scheme

OR: Overreaching

CR: Communication signal received

CS: Communication signal send

T2: Timer step 2

Unblocking scheme

Metallic communication paths adversely affected by fault generated noise may not be suitable for conventional permissive schemes that rely on signal transmitted during a protected line fault. With power line carrier, for example, the communication signal may be attenuated by the fault, especially when the fault is close to the line end, thereby disabling the communication channel.

To overcome the lower dependability in permissive schemes, an unblocking function can be used. Use this function at older, less reliable, power-line carrier (PLC) communication, where the signal has to be sent through the primary fault. The unblocking function uses a guard signal CR_GUARD, which must always be present, even when no CR signal is received. The absence of the CR_GUARD signal during the security time is used as a CR signal. This also enables a permissive scheme to operate when the line fault blocks the signal transmission. Set the *tSecurity* to 35 ms.

14.1.2.3 Intertrip scheme

In some power system applications, there is a need to trip the remote end breaker immediately from local protections. This applies, for instance, when transformers or reactors are connected to the system without circuit-breakers or for remote tripping following operation of breaker failure protection.

In intertrip scheme, the send signal is initiated by an underreaching zone or from an external protection (transformer or reactor protection). At remote end, the received signals initiate a trip without any further protection criteria. To limit the risk for unwanted trip due to spurious sending of signals, the timer *tCoord* should be set to 10-30 ms dependant on type of communication channel.

The general requirement for teleprotection equipment operating in intertripping applications is that it should be very secure and very dependable, since both inadequate security and dependability may cause unwanted operation. In some applications the equipment shall be able to receive while transmitting, and commands may be transmitted over longer time period than for other teleprotection systems.

14.1.3 Setting guidelines

The parameters for the scheme communication logic function are set via the local HMI or PCM600.

Configure the zones used for the CS send and for scheme communication tripping by using the ACT configuration tool.

The recommended settings of *tCoord* timer are based on maximal recommended transmission time for analogue channels according to IEC 60834-1. It is recommended to coordinate the proposed settings with actual performance for the teleprotection equipment to get optimized settings.

14.1.3.1 Blocking scheme

Set *Operation*	= *Enabled*
Set *SchemeType*	= *Blocking*
Set *tCoord*	25 ms (10 ms + maximal transmission time)
Set *tSendMin*	= 0 s
Set *Unblock*	= *Disabled* (Set to *NoRestart* if Unblocking scheme with no alarm for loss of guard is to be used. Set to *Restart* if Unblocking scheme with alarm for loss of guard is to be used)
Set *tSecurity*	= 0.035 s

14.1.3.2 Permissive underreaching scheme

Set *Operation*	= *Enabled*
Set *SchemeType*	= *Permissive UR*
Set *tCoord*	= 0 ms

Table continues on next page

Set *tSendMin* = 0.1 s

Set *Unblock* = *Disabled*

Set *tSecurity* = 0.035 s

14.1.3.3 Permissive overreaching scheme

Set *Operation* = *Enabled*

Set *Scheme type* = *Permissive OR*

Set *tCoord* = 0 ms

Set *tSendMin* = 0.1 s (0 s in parallel line applications)

Set *Unblock* = *Disabled*

Set *tSecurity* = 0.035 s

14.1.3.4 Unblocking scheme

Set *Unblock* = *Restart*
(Loss of guard signal will give both trip and alarm
Choose *NoRestart* if only trip is required)

Set *tSecurity* = 0.035 s

14.1.3.5 Intertrip scheme

Set *Operation* = *Enabled*

Set *SchemeType* = *Intertrip*

Set *tCoord* 50 ms (10 ms + maximal transmission time)

Set *tSendMin* = 0.1 s (0 s in parallel line applications)

Set *Unblock* = *Disabled*

Set *tSecurity* = 0.015 s

14.2 Current reversal and Weak-end infeed logic for distance protection 3-phase ZCRWPSCH (85)

14.2.1 Identification

Function description	IEC 61850 identification	IEC 60617 identification	ANSI/IEEE C37.2 device number
Current reversal and weak-end infeed logic for distance protection 3-phase	ZCRWPSCH	-	85

14.2.2 Application

14.2.2.1 Current reversal logic

If parallel lines are connected to common buses at both terminals, overreaching permissive communication schemes can trip unselectable due to current reversal. The unwanted tripping affects the healthy line when a fault is cleared on the parallel line. This lack of security results in a total loss of interconnection between the two buses.

To avoid this kind of disturbances, a fault current reversal logic (transient blocking logic) can be used.

The unwanted operations that might occur can be explained by looking into Figure 172 and Figure 173. Initially the protection A2 at A side will detect a fault in forward direction and send a communication signal to the protection B2 at remote end, which is measuring a fault in reverse direction.

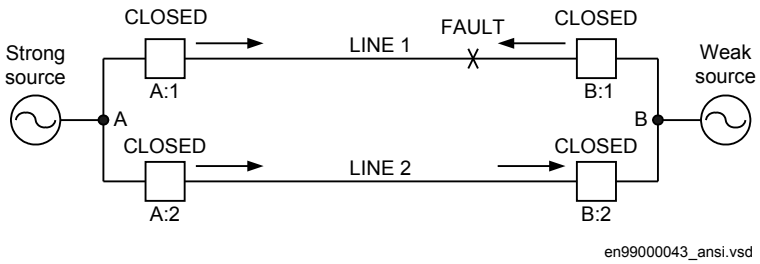

Figure 172: Current distribution for a fault close to B side when all breakers are closed

When the breaker B1 opens for clearing the fault, the fault current through B2 bay will invert. If the communication signal has not reset at the same time as the distance protection function used in the teleprotection scheme has switched on to forward direction, we will have an unwanted operation of breaker B2 at B side.

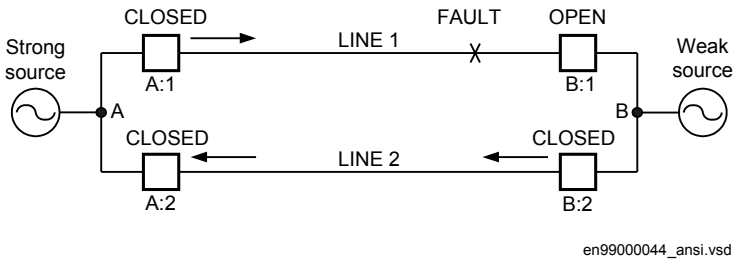

Figure 173: Current distribution for a fault close to B side when breaker B1 has opened

To handle this the send signal CS or CSLn from B2 is held back until the reverse zone IRVLn has reset and the *tDelayRev* time has been elapsed. To achieve this the reverse zone on the distance protection shall be connected to input IRV and the output IRVL shall be connected to input BLKCS on the communication function block ZCPSCH.

The function can be blocked by activating the input IRVBLK or the general BLOCK input.

14.2.2.2 Weak-end infeed logic

Permissive communication schemes can basically operate only when the protection in the remote IED can detect the fault. The detection requires a sufficient minimum fault current, normally >20% of . The fault current can be too low due to an open breaker or low short-circuit power of the source. To overcome these conditions, weak-end infeed (WEI) echo logic is used. The fault current can also be initially too low due to the fault current distribution. Here, the fault current increases when the breaker opens at the strong terminal, and a sequential tripping is achieved. This requires a detection of the fault by an independent tripping zone 1. To avoid sequential tripping as described, and when zone 1 is not available, weak-end infeed tripping logic is used. The weak end infeed function only works together with permissive overreach communication schemes as the carrier send signal must cover the hole line length.

The WEI function sends back (echoes) the received signal under the condition that no fault has been detected on the weak-end by different fault detection elements (distance protection in forward and reverse direction).

The WEI function can be extended to trip also the breaker in the weak side. The trip is achieved when one or more phase voltages are low during an echo function.

In case of single-pole tripping, the phase voltages are used as phase selectors together with the received signal CRLn.

Together with the blocking teleprotection scheme some limitations apply:

- Only the trip part of the function can be used together with the blocking scheme. It is not possible to use the echo function to send the echo signal to the remote line IED. The echo signal would block the operation of the distance protection at the remote line end and in this way prevents the correct operation of a complete protection scheme.
- A separate direct intertrip channel must be arranged from remote end when a trip or accelerated trip is given there. The intertrip receive signal is connect to input CRL.
- The WEI function shall be set to *WEI=Echo&Trip*. The WEI function block will then give phase selection and trip the local breaker.

Avoid using WEI function at both line ends. It shall only be activated at the weak-end.

14.2.3 Setting guidelines

The parameters for the current reversal logic and the weak-end infeed logic (WEI) function are set via the local HMI or PCM600.

Common base IED values for primary current (*IBase*), primary voltage (*VBase*) and primary power (*SBase*) are set in a Global base values for settings function GBASVAL.

GlobalBaseSel: It is used to select a GBASVAL function for reference of base values.

14.2.3.1 Current reversal logic

Set *CurrRev* to *Enabled* to activate the function.

Set *tDelayRev* timer at the maximum reset time for the communication equipment that gives the carrier receive (CRL) signal plus 30 ms. A minimum setting of 40 ms is recommended, typical 60 ms.

A long *tDelayRev* setting increases security against unwanted tripping, but delay the fault clearing in case of a fault developing from one line that evolves to the other one. The probability of this type of fault is small. Therefore set *tDelayRev* with a good margin.

Set the pick-up delay *tPickUpRev* to <80% of the breaker operate time, but with a minimum of 20 ms.

14.2.3.2 Weak-end infeed logic

Set *WEI* to *Echo*, to activate the weak-end infeed function with only echo function.

Set *WEI* to *Echo&Trip* to obtain echo with trip.

Set *tPickUpWEI* to *10* ms, a short delay is recommended to avoid that spurious carrier received signals will activate WEI and cause unwanted carrier send (ECHO) signals.

Set the voltage criterion *PU27PP* and *PU27PN* for the weak-end trip to 70% of the system base voltage *VBase*. The setting should be below the minimum operate voltage of the system but above the voltage that occurs for fault on the protected line. The phase-to-phase elements must be verified to not operate for phase to ground faults.

When single pole tripping is required a detailed study of the voltages at phase-to-phase respectively phase-to-ground faults, at different fault locations, is normally required.

14.3 Local acceleration logic ZCLCPSCH

14.3.1 Identification

Function description	IEC 61850 identification	IEC 60617 identification	ANSI/IEEE C37.2 device number
Local acceleration logic	ZCLCPSCH	-	-

14.3.2 Application

The local acceleration logic (ZCLCPSCH) is used in those applications where conventional teleprotection scheme is not available (no communication channel), but the user still require fast clearance for faults on the whole line.

This logic enables fast fault clearing during certain conditions, but naturally, it can not fully replace a teleprotection scheme.

The logic can be controlled either by the autorecloser (zone extension) or by the loss-of-load current (loss-of-load acceleration).

The loss-of-load acceleration gives selected overreach zone permission to operate instantaneously after check of the different current criteria. It can not operate for three-phase faults.

14.3.3 Setting guidelines

The parameters for the local acceleration logic functions are set via the local HMI or PCM600.

Set *ZoneExtension* to *Enabled* when the first trip from selected overreaching zone shall be instantaneous and the definitive trip after autoreclosure a normal time-delayed trip.

Set *LossOfLoad* to *Enabled* when the acceleration shall be controlled by loss-of-load in healthy phase(s).

LoadCurr must be set below the current that will flow on the healthy phase when one or two of the other phases are faulty and the breaker has opened at remote end (three-phase). Calculate the setting according to equation 130.

$$LoadCurr = \frac{0.5 \cdot I_{Load\ min}}{I_{Base}}$$

(Equation 130)

where:

ILoadmin is the minimum load current on the line during normal operation conditions.

The timer *tLoadOn* is used to increase the security of the loss-of-load function for example to avoid unwanted release due to transient inrush current when energizing the line power transformer. The loss-of-load function will be released after the timer *tLoadOn* has elapsed at the same time as the load current in all three phases are above the setting *LoadCurr*. In normal acceleration applications there is no need for delaying the release, so set the *tLoadOn* to zero.

The drop-out timer *tLoadOff* is used to determine the window for the current release conditions for Loss-of-load. The timer is by default set to 300ms, which is judged to be enough to secure the current release.

The setting of the minimum current detector, *MinCurr*, should be set higher than the unsymmetrical current that might flow on the non faulty line, when the breaker at remote end has opened (three-phase). At the same time it should be set below the minimum load current transfer during normal operations that the line can be subjected to. By default, *MinCurr* is set to 5% of *IBase*.

The pick-up timer *tLowCurr* determine the window needed for pick-up of the minimum current value used to release the function. The timer is by default set to 200 ms, which is judged to be enough to avoid unwanted release of the function (avoid unwanted trip).

14.4 Scheme communication logic for residual overcurrent protection ECPSCH (85)

14.4.1 Identification

Function description	IEC 61850 identification	IEC 60617 identification	ANSI/IEEE C37.2 device number
Scheme communication logic for residual overcurrent protection	ECPSCH	-	85

14.4.2 Application

To achieve fast fault clearance of ground faults on the part of the line not covered by the instantaneous step of the residual overcurrent protection, the directional residual overcurrent protection can be supported with a logic that uses communication channels.

One communication channel is used in each direction, which can transmit an on/off signal if required. The performance and security of this function is directly related to the transmission channel speed and security against false or lost signals.

In the directional scheme, information of the fault current direction must be transmitted to the other line end.

With directional comparison in permissive schemes, a short operate time of the protection including a channel transmission time, can be achieved. This short operate time enables rapid autoreclosing function after the fault clearance.

During a single-phase reclosing cycle, the autoreclosing device must block the directional comparison ground-fault communication scheme.

The communication logic module enables blocking as well as permissive under/overreaching schemes. The logic can also be supported by additional logic for weak-end infeed and current reversal, included in the Current reversal and weak-end infeed logic for residual overcurrent protection (ECRWPSCH, 85) function.

Metallic communication paths adversely affected by fault generated noise may not be suitable for conventional permissive schemes that rely on signal transmitted during a protected line fault. With power line carrier, for example, the communication signal may be attenuated by the fault, especially when the fault is close to the line end, thereby disabling the communication channel.

To overcome the lower dependability in permissive schemes, an unblocking function can be used. Use this function at older, less reliable, power line carrier (PLC) communication, where the signal has to be sent through the primary fault. The unblocking function uses a guard signal CRG, which must always be present, even when no CR signal is received. The absence of the CRG signal during the security time is used as a CR signal. This also enables a permissive scheme to operate when the line fault blocks the signal transmission. Set the *tSecurity* to 35 ms.

14.4.3 Setting guidelines

The parameters for the scheme communication logic for residual overcurrent protection function are set via the local HMI or PCM600.

The following settings can be done for the scheme communication logic for residual overcurrent protection function:

Operation: *Disabled* or *Enabled*.

SchemeType: This parameter can be set to *Off* , *Intertrip*, *Permissive UR*, *Permissive OR* or *Blocking*.

tCoord: Delay time for trip from ECPSCH (85) function. For Permissive under/ overreaching schemes, this timer shall be set to at least 20 ms plus maximum reset time of the communication channel as a security margin. For Blocking scheme, the setting should be > maximum signal transmission time +10 ms.

Unblock: Select *Off* if unblocking scheme with no alarm for loss of guard is used. Set to *Restart* if unblocking scheme with alarm for loss of guard is used.

14.5 Current reversal and weak-end infeed logic for residual overcurrent protection ECRWPSCH (85)

14.5.1 Identification

Function description	IEC 61850 identification	IEC 60617 identification	ANSI/IEEE C37.2 device number
Current reversal and weak-end infeed logic for residual overcurrent protection	ECRWPSCH	-	85

14.5.2 Application

14.5.2.1 Fault current reversal logic

Figure 174 and Figure 175 show a typical system condition, which can result in a fault current reversal.

Assume that fault is near the B1 breaker. B1 Relay sees the fault in Zone1 and A1 relay identifies the fault in Zone2.

Note that the fault current is reversed in line L2 after the breaker B1 opening.

It can cause an unselective trip on line L2 if the current reversal logic does not block the permissive overreaching scheme in the IED at B2.

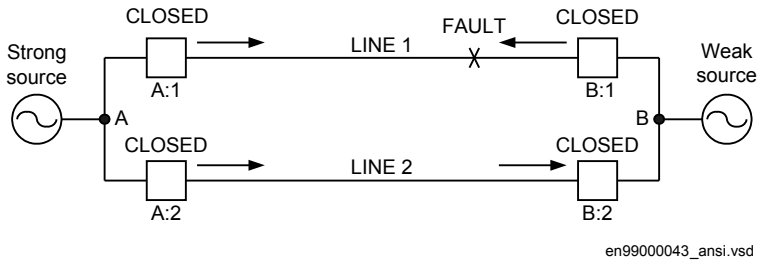

Figure 174: Current distribution for a fault close to B side when all breakers are closed

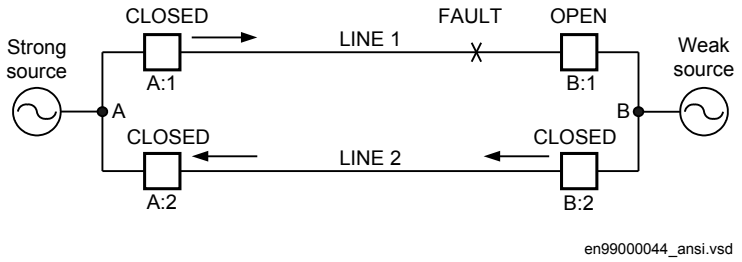

Figure 175: Current distribution for a fault close to B side when breaker at B1 is opened

When the breaker on the parallel line operates, the fault current on the healthy line is reversed. The IED at B2 recognizes the fault in forward direction from reverse direction before breaker operates. As IED at B2 already received permissive signal from A2 and IED at B2 is now detecting the fault as forward fault, it will immediately trip breaker at B2. To ensure that tripping at B2 should not occur, the permissive overreaching function at B2 needs to be blocked by IRVL till the received permissive signal from A2 is reset.

The IED at A2, where the forward direction element was initially activated, must reset before the send signal is initiated from B2. The delayed reset of output signal IRVL also ensures the send signal from IED B2 is held back till the forward direction element is reset in IED A2.

14.5.2.2 Weak-end infeed logic

Figure 176 shows a typical system condition that can result in a missing operation. Note that there is no fault current from node B. This causes that the IED at B cannot detect the fault and trip the breaker in B. To cope with this situation, a selectable weak-end infeed logic is provided for the permissive overreaching scheme.

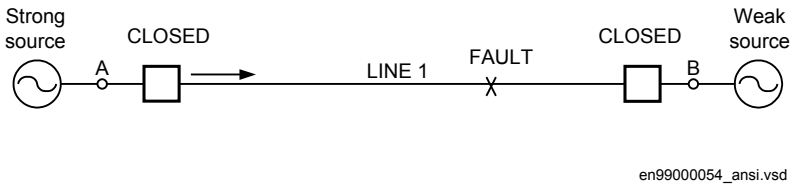

Figure 176: Initial condition for weak-end infeed

14.5.3 Setting guidelines

The parameters for the current reversal and weak-end infeed logic for residual overcurrent protection function are set via the local HMI or PCM600.

Common base IED values for primary current (*IBase*), primary voltage (VBase) and primary power (*SBase*) are set in a Global base values for settings function GBASVAL.

GlobalBaseSel: It is used to select a GBASVAL function for reference of base values.

14.5.3.1 Current reversal

The current reversal function is set on or off by setting the parameter *CurrRev* to *Enabled* or *Disabled*. Time delays shall be set for the timers *tPickUpRev* and *tDelayRev*.

tPickUpRev is chosen shorter (<80%) than the breaker opening time, but minimum 20 ms.

tDelayRev is chosen at a minimum to the sum of protection reset time and the communication reset time. A minimum *tDelayRev* setting of 40 ms is recommended.

The reset time of the directional residual overcurrent protection (EF4PTOC) is typically 25 ms. If other type of residual overcurrent protection is used in the remote line end, its reset time should be used.

The signal propagation time is in the range 3 – 10 ms/km for most types of communication media. In communication networks small additional time delays are added in multiplexers and repeaters. Theses delays are less than 1 ms per process. It is often stated that the total propagation time is less than 5 ms.

When a signal picks-up or drops out there is a decision time to be added. This decision time is highly dependent on the interface between communication and protection used. In many cases an external interface (teleprotection equipment) is used. This equipment makes a decision and gives a binary signal to the protection device. In case of analog teleprotection equipment typical decision time is in the range 10 – 30 ms. For digital teleprotection equipment this time is in the range 2 – 10 ms.

If the teleprotection equipment is integrated in the protection IED the decision time can be slightly reduced.

The principle time sequence of signaling at current reversal is shown.

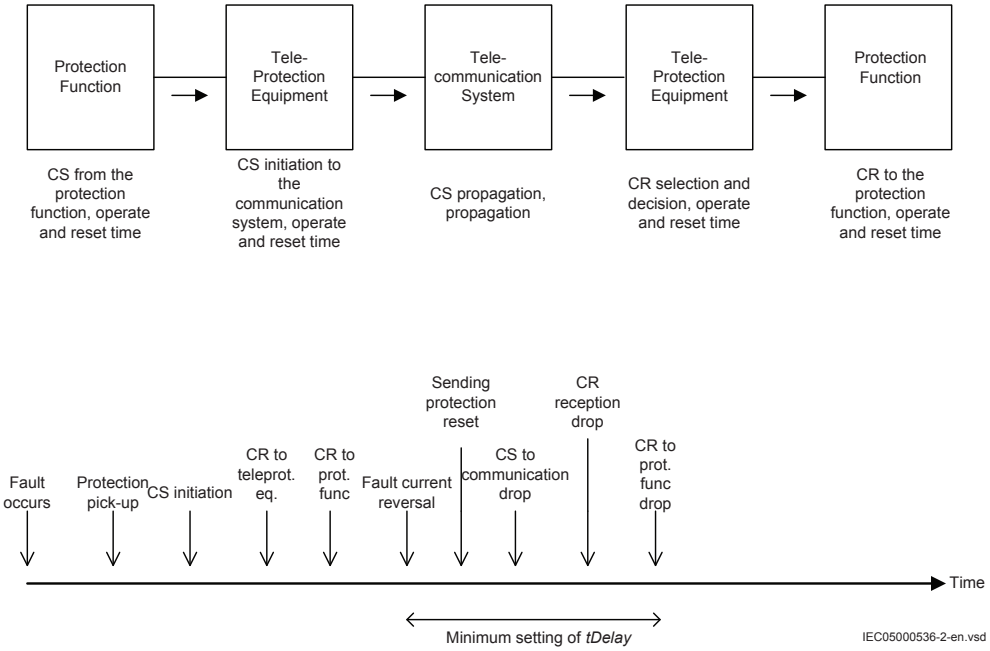

Figure 177: Time sequence of signaling at current reversal

14.5.3.2 Weak-end infeed

The weak-end infeed can be set by setting the parameter *WEI* to *Off*, *Echo* or *Echo & Trip*. Operating zero sequence voltage when parameter *WEI* is set to *Echo & Trip* is set with 3V0PU.

The zero sequence voltage for a fault at the remote line end and appropriate fault resistance is calculated.

To avoid unwanted trip from the weak-end infeed logic (if spurious signals should occur), set the operate value of the broken delta voltage level detector (3V0) higher than the maximum false network frequency residual voltage that can occur during normal service conditions. The recommended minimum setting is two times the false zero-sequence voltage during normal service conditions.

Section 15 Logic

15.1 Tripping logic common 3-phase output SMPPTRC (94)

15.1.1 Identification

Function description	IEC 61850 identification	IEC 60617 identification	ANSI/IEEE C37.2 device number
Tripping logic common 3-phase output	SMPPTRC	I->O	94

15.1.2 Application

All trip signals from the different protection functions shall be routed through the trip logic. In its simplest alternative the logic will only link the TRIP signal and make sure that it is long enough.

Tripping logic SMPPTRC (94) offers three different operating modes:

- Three-pole tripping for all fault types (3ph operating mode)
- Single-pole tripping for single-phase faults and three-pole tripping for multi-phase and evolving faults (1ph/3ph operating mode). The logic also issues a three-pole tripping command when phase selection within the operating protection functions is not possible, or when external conditions request three-pole tripping.
- Two-pole tripping for two-phase faults.

The three-pole trip for all faults offers a simple solution and is often sufficient in well meshed transmission systems and in sub-transmission systems. Since most faults, especially at the highest voltage levels, are single phase-to-ground faults, single-pole tripping can be of great value. If only the faulty phase is tripped, power can still be transferred on the line during the dead time that arises before reclosing. Single-pole tripping during single-phase faults must be combined with single pole reclosing.

To meet the different double, breaker-and-a-half and other multiple circuit breaker arrangements, two identical SMPPTRC (94) function blocks may be provided within the IED.

One SMPPTRC (94) function block should be used for each breaker, if the line is connected to the substation via more than one breaker. Assume that single-pole tripping and autoreclosing is used on the line. Both breakers are then normally set up for 1/3-pole tripping and 1/3-phase autoreclosing. As an alternative, the breaker chosen as master can have single-pole tripping, while the slave breaker could have three-pole tripping and autoreclosing. In the case of a permanent fault, only one of the breakers has to be operated when the fault is energized a second time. In the event of a transient fault the slave breaker performs a three-pole reclosing onto the non-faulted line.

The same philosophy can be used for two-pole tripping and autoreclosing.

To prevent closing of a circuit breaker after a trip the function can block the closing.

The two instances of the SMPPTRC (94) function are identical except, for the name of the function block (SMPPTRC1 and SMPPTRC2). References will therefore only be made to SMPPTRC1 in the following description, but they also apply to SMPPTRC2.

15.1.2.1 Three-pole tripping

A simple application with three-pole tripping from the logic block utilizes part of the function block. Connect the inputs from the protection function blocks to the input TRINP_3P. If necessary (normally the case) use a logic OR block to combine the different function outputs to this input. Connect the output TRIP to the digital Output/s on the IO board.

This signal can also be used for other purposes internally in the IED. An example could be the starting of Breaker failure protection. The three outputs TR_A, TR_B, TR_C will always be activated at every trip and can be utilized on individual trip outputs if single-pole operating devices are available on the circuit breaker even when a three-pole tripping scheme is selected.

Set the function block to *Program = 3Ph* and set the required length of the trip pulse to for example, *tTripMin = 150ms*.

For special applications such as Lock-out refer to the separate section below. The typical connection is shown below in figure 178. Signals that are not used are dimmed.

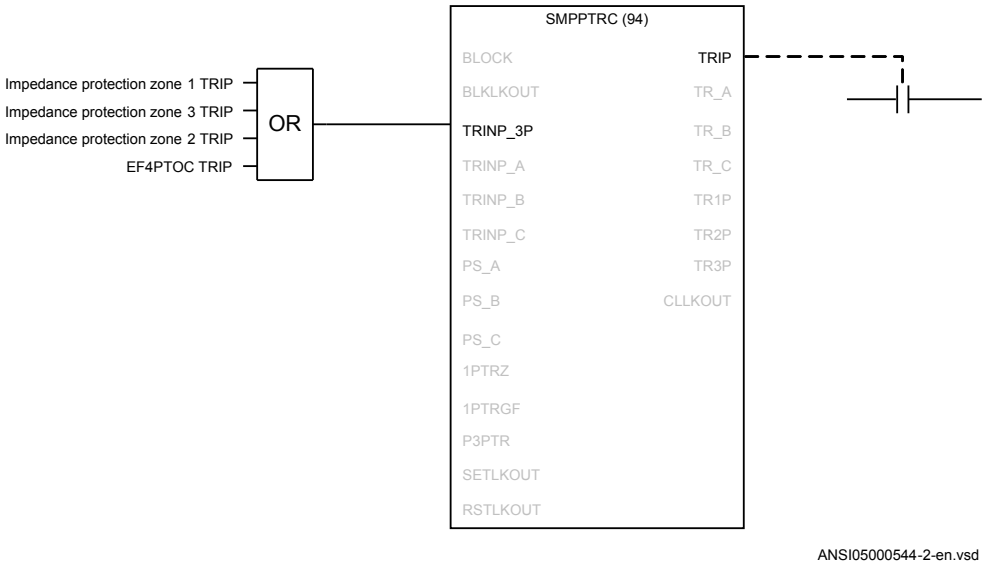

Figure 178: Tripping logic SMPPTRC (94) is used for a simple three-pole tripping application

15.1.2.2 Single- and/or three-pole tripping

The single-/three-pole tripping will give single-pole tripping for single-phase faults and three-pole tripping for multi-phase fault. The operating mode is always used together with a single-phase autoreclosing scheme.

The single-pole tripping can include different options and the use of the different inputs in the function block.

The inputs 1PTRZ and 1PTREF are used for single-pole tripping for distance protection and directional ground fault protection as required.

The inputs are combined with the phase selection logic and the pickup signals from the phase selector must be connected to the inputs PS_A, PS_B and PS_C to achieve the tripping on the respective single-pole trip outputs TR_A, TR_B and TR_C. The Output TRIP is a general trip and activated independent of which phase is involved. Depending on which phases are involved the outputs TR1P, TR2P and TR3P will be activated as well.

When single-pole tripping schemes are used a single-phase autoreclosing attempt is expected to follow. For cases where the autoreclosing is not in service or will not follow for some reason, the input Prepare Three-pole Trip P3PTR must be activated. This is normally connected to the respective output on the Synchronism check, energizing check, and synchronizing function SESRSYN (25) but can also be connected to other signals, for example an external logic signal. If two breakers are involved, one TR block instance and

one SESRSYN (25) instance is used for each breaker. This will ensure correct operation and behavior of each breaker.

The output Trip 3 Phase TR3P must be connected to the respective input in SESRSYN (25) to switch SESRSYN (25) to three-phase reclosing. If this signal is not activated SESRSYN (25) will use single-phase reclosing dead time.

Note also that if a second line protection is utilizing the same SESRSYN (25) the three-pole trip signal must be generated, for example by using the three-trip relays contacts in series and connecting them in parallel to the TR3P output from the trip block.

The trip logic also has inputs TRIN_A, TRIN_B and TRIN_C where phase-selected trip signals can be connected. Examples can be individual phase inter-trips from remote end or internal/external phase selected trip signals, which are routed through the IED to achieve, for example SESRSYN (25), Breaker failure, and so on. Other back-up functions are connected to the input TRIN as described above. A typical connection for a single-pole tripping scheme is shown in figure 179.

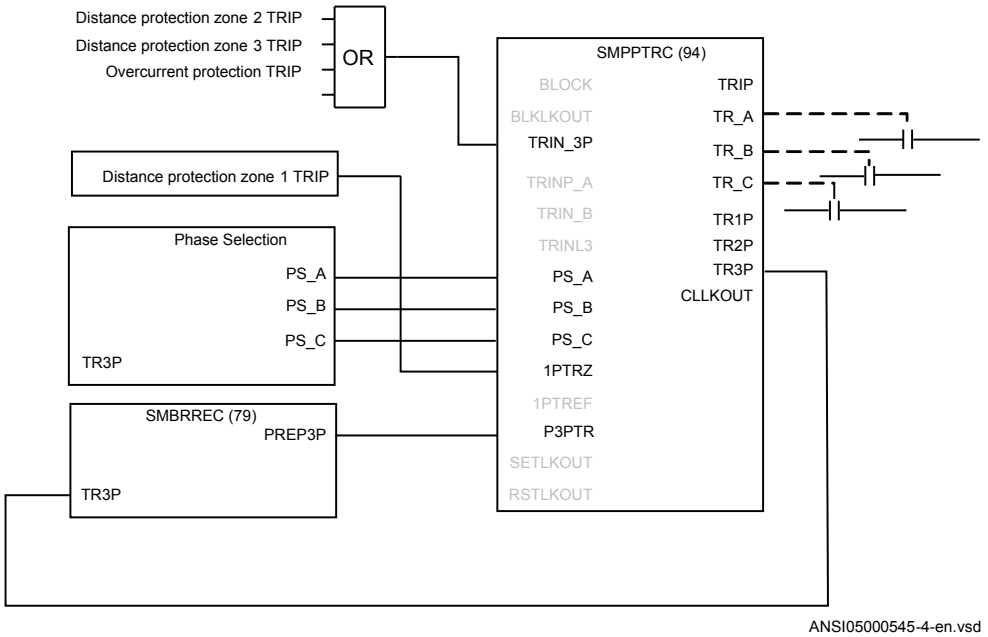

Figure 179: The trip logic function SMPPTRC (94) used for single-pole tripping application

15.1.2.3 Single-, two- or three-pole tripping

The single-/two-/three-pole tripping mode provides single-pole tripping for single-phase faults, two-pole tripping for two-phase faults and three-pole tripping for multi-phase faults. The operating mode is always used together with an autoreclosing scheme with setting *Program = 1/2/3Ph* or *Program = 1/3Ph* attempt.

The functionality is very similar to the single-phase scheme described above. However SESRSYN (25) must in addition to the connections for single phase above be informed that the trip is two phase by connecting the trip logic output TR2P to the respective input in SESRSYN (25).

15.1.2.4 Lock-out

This function block is provided with possibilities to initiate lock-out. The lock-out can be set to only activate the block closing output CLLKOUT or initiate the block closing output and also maintain the trip signal (latched trip).

The lock-out can then be manually reset after checking the primary fault by activating the input reset Lock-Out RSTLKOUT.

If external conditions are required to initiate Lock-out but not initiate trip this can be achieved by activating input SETLKOUT. The setting *AutoLock = Disabled* means that the internal trip will not activate lock-out so only initiation of the input SETLKOUT will result in lock-out. This is normally the case for overhead line protection where most faults are transient. Unsuccessful autoreclose and back-up zone tripping can in such cases be connected to initiate Lock-out by activating the input SETLKOUT.

15.1.2.5 Blocking of the function block

The function block can be blocked in two different ways. Its use is dependent on the application. Blocking can be initiated internally by logic, or by the operator using a communication channel. Total blockage of the trip function is done by activating the input BLOCK and can be used to block the output of the trip logic in the event of internal failures. Blockage of lock-out output by activating input BLKLKOUT is used for operator control of the lock-out function.

15.1.3 Setting guidelines

The parameters for Tripping logic SMPPTRC (94) are set via the local HMI or PCM600.

The following trip parameters can be set to regulate tripping.

Operation: Sets the mode of operation. *Disabled* switches the tripping off. The normal selection is *Enabled*.

Program: Sets the required tripping scheme. Normally *3Ph* or *1/2Ph* are used.

TripLockout: Sets the scheme for lock-out. *Disabled* only activates the lock-out output. *Enabled* activates the lock-out output and latches the output `TRIP`. The normal selection is *Disabled*.

AutoLock: Sets the scheme for lock-out. *Disabled* only activates lock-out through the input SETLKOUT. *Enabled* additonally allows activation through the trip function itself. The normal selection is *Disabled*.

tTripMin: Sets the required minimum duration of the trip pulse. It should be set to ensure that the breaker is tripped correctly. Normal setting is *0.150s*.

tWaitForPHS: Sets a duration after any of the inputs 1PTRZ or 1PTREF has been activated during which a phase selection must occur to get a single phase trip. If no phase selection has been achieved a three-phase trip will be issued after the time has elapsed.

15.2 Trip matrix logic TMAGAPC

15.2.1 Identification

Function description	IEC 61850 identification	IEC 60617 identification	ANSI/IEEE C37.2 device number
Trip matrix logic	TMAGAPC	-	-

15.2.2 Application

Trip matrix logic TMAGAPC function is used to route trip signals and other logical output signals to different output contacts on the IED.

The trip matrix logic function has 3 output signals and these outputs can be connected to physical tripping outputs according to the specific application needs for settable pulse or steady output.

15.2.3 Setting guidelines

Operation: Operation of function *Enabled*/*Disabled*.

PulseTime: Defines the pulse time when in *Pulsed* mode. When used for direct tripping of circuit breaker(s) the pulse time delay shall be set to approximately 0.150 seconds in order to obtain satisfactory minimum duration of the trip pulse to the circuit breaker trip coils.

OnDelay: Used to prevent output signals to be given for spurious inputs. Normally set to 0 or a low value.

OffDelay: Defines a delay of the reset of the outputs after the activation conditions no longer are fulfilled. It is only used in *Steady* mode. When used for direct tripping of circuit breaker(s) the off delay time shall be set to at least 0.150 seconds in order to obtain a satisfactory minimum duration of the trip pulse to the circuit breaker trip coils.

ModeOutputx: Defines if output signal `OUTPUTx` (where x=1-3) is *Steady* or *Pulsed*.

15.3 Logic for group alarm ALMCALH

15.3.1 Identification

Function description	IEC 61850 identification	IEC 60617 identification	ANSI/IEEE C37.2 device number
Logic for group alarm	ALMCALH	-	-

15.3.2 Application

Group alarm logic function ALMCALH is used to route alarm signals to different LEDs and/or output contacts on the IED.

ALMCALH output signal and the physical outputs allows the user to adapt the alarm signal to physical tripping outputs according to the specific application needs.

15.3.3 Setting guidelines

Operation: *Enabled* or *Disabled*

15.4 Logic for group alarm WRNCALH

15.4.1 Logic for group warning WRNCALH

15.4.1.1 Identification

Function description	IEC 61850 identification	IEC 60617 identification	ANSI/IEEE C37.2 device number
Logic for group warning	WRNCALH	-	-

15.4.1.2 Application

Group warning logic function WRNCALH is used to route warning signals to LEDs and/ or output contacts on the IED.

WRNCALH output signal WARNING and the physical outputs allows the user to adapt the warning signal to physical tripping outputs according to the specific application needs.

15.4.1.3 Setting guidelines

OperationEnabled or *Disabled*

15.5 Logic for group indication INDCALH

15.5.1 Logic for group indication INDCALH

15.5.1.1 Identification

Function description	IEC 61850 identification	IEC 60617 identification	ANSI/IEEE C37.2 device number
Logic for group indication	INDCALH	-	-

15.5.1.2 Application

Group indication logic function INDCALH is used to route indication signals to different LEDs and/or output contacts on the IED.

INDCALH output signal IND and the physical outputs allows the user to adapt the indication signal to physical outputs according to the specific application needs.

15.5.1.3 Setting guidelines

Operation: *Enabled* or *Disabled*

15.6 Configurable logic blocks

15.6.1 Application

A set of standard logic blocks, like AND, OR etc, and timers are available for adapting the IED configuration to the specific application needs. Additional logic blocks that, beside the normal logical function, have the capability to propagate timestamp and quality are also available. Those blocks have a designation including the letters QT, like ANDQT, ORQT etc.

There are no settings for AND gates, OR gates, inverters or XOR gates as well as, for ANDQT gates, ORQT gates or XORQT gates.

For normal On/Off delay and pulse timers the time delays and pulse lengths are set from the local HMI or via the PST tool.

Both timers in the same logic block (the one delayed on pick-up and the one delayed on drop-out) always have a common setting value.

For controllable gates, settable timers and SR flip-flops with memory, the setting parameters are accessible via the local HMI or via the PST tool.

15.6.2.1 Configuration

Logic is configured using the ACT configuration tool in PCM600.

Execution of functions as defined by the configurable logic blocks runs according to a fixed sequence with different cycle times.

For each cycle time, the function block is given an serial execution number. This is shown when using the ACT configuration tool with the designation of the function block and the cycle time, see example below.

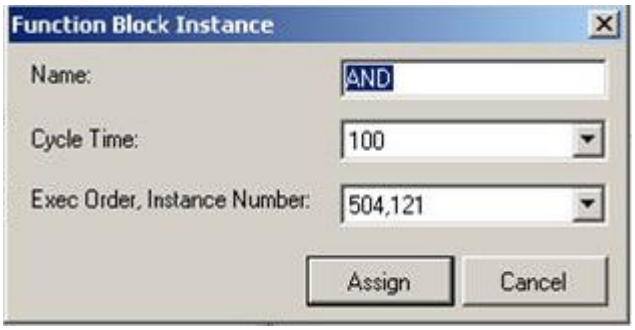

IEC09000695_2_en.vsd

Figure 180: Example designation, serial execution number and cycle time for logic function

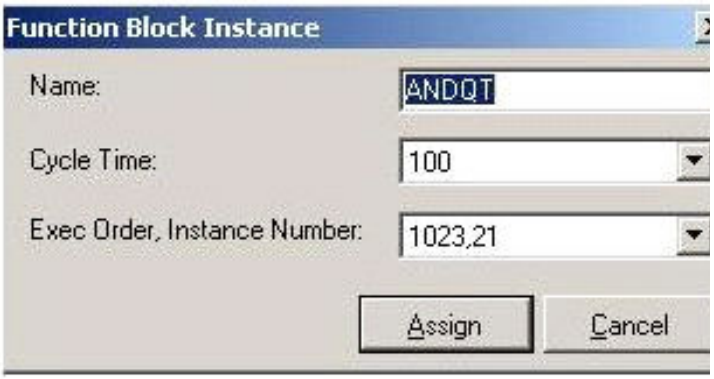

IEC09000310-1-en.vsd

Figure 181: Example designation, serial execution number and cycle time for logic function that also propagates timestamp and quality of input signals

The execution of different function blocks within the same cycle is determined by the order of their serial execution numbers. Always remember this when connecting two or more logical function blocks in series.

Always be careful when connecting function blocks with a fast cycle time to function blocks with a slow cycle time.
Remember to design the logic circuits carefully and always check the execution sequence for different functions. In other cases, additional time delays must be introduced into the logic schemes to prevent errors, for example, race between functions.

15.7 Fixed signal function block FXDSIGN

15.7.1 Identification

Function description	IEC 61850 identification	IEC 60617 identification	ANSI/IEEE C37.2 device number
Fixed signals	FXDSIGN	-	-

15.7.2 Application

The Fixed signals function FXDSIGN generates nine pre-set (fixed) signals that can be used in the configuration of an IED, either for forcing the unused inputs in other function blocks to a certain level/value, or for creating certain logic. Boolean, integer, floating point, string types of signals are available.

Example for use of GRP_OFF signal in FXDSIGN

The Restricted earth fault function REFPDIF (87N) can be used both for auto-transformers and normal transformers.

When used for auto-transformers, information from both windings parts, together with the neutral point current, needs to be available to the function. This means that three inputs are needed.

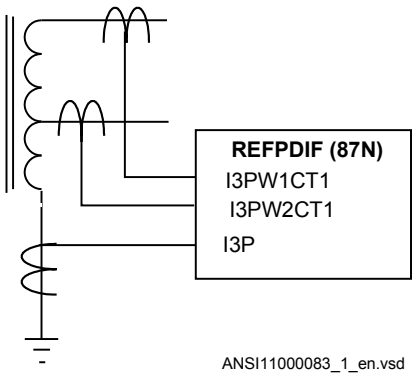

Figure 182: REFPDIF (87N) function inputs for autotransformer application

For normal transformers only one winding and the neutral point is available. This means that only two inputs are used. Since all group connections are mandatory to be connected, the third input needs to be connected to something, which is the GRP_OFF signal in FXDSIGN function block.

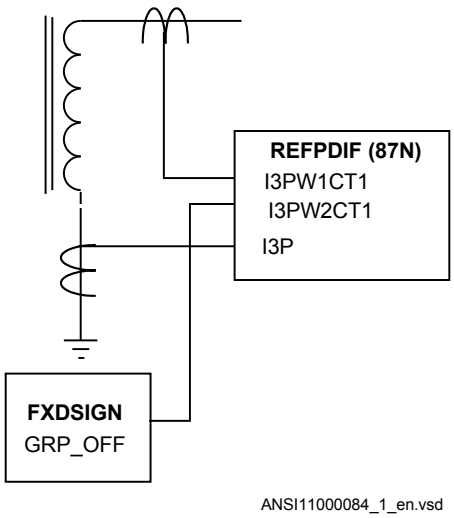

Figure 183: REFPDIF (87N) function inputs for normal transformer application

15.8 Boolean 16 to Integer conversion B16I

15.8.1 Identification

Function description	IEC 61850 identification	IEC 60617 identification	ANSI/IEEE C37.2 device number
Boolean 16 to integer conversion	B16I	-	-

15.8.2 Application

Boolean 16 to integer conversion function B16I is used to transform a set of 16 binary (logical) signals into an integer. It can be used – for example, to connect logical output signals from a function (like distance protection) to integer inputs from another function (like line differential protection). B16I does not have a logical node mapping.

The Boolean 16 to integer conversion function (B16I) will transfer a combination of up to 16 binary inputs INx where $1 \leq x \leq 16$ to an integer. Each INx represents a value according to the table below from 0 to 32768. This follows the general formula: $INx = 2^{x-1}$ where $1 \leq x \leq 16$. The sum of all the values on the activated INx will be available on the output OUT as a sum of the values of all the inputs INx that are activated. OUT is an integer. When all INx where $1 \leq x \leq 16$ are activated that is = Boolean 1 it corresponds to that integer 65535 is available on the output OUT. B16I function is designed for receiving up to 16

booleans input locally. If the BLOCK input is activated, it will freeze the output at the last value.

Values of each of the different OUTx from function block B16I for 1≤x≤16.

The sum of the value on each INx corresponds to the integer presented on the output OUT on the function block B16I.

Name of input	Type	Default	Description	Value when activated	Value when deactivated
IN1	BOOLEAN	0	Input 1	1	0
IN2	BOOLEAN	0	Input 2	2	0
IN3	BOOLEAN	0	Input 3	4	0
IN4	BOOLEAN	0	Input 4	8	0
IN5	BOOLEAN	0	Input 5	16	0
IN6	BOOLEAN	0	Input 6	32	0
IN7	BOOLEAN	0	Input 7	64	0
IN8	BOOLEAN	0	Input 8	128	0
IN9	BOOLEAN	0	Input 9	256	0
IN10	BOOLEAN	0	Input 10	512	0
IN11	BOOLEAN	0	Input 11	1024	0
IN12	BOOLEAN	0	Input 12	2048	0
IN13	BOOLEAN	0	Input 13	4096	0
IN14	BOOLEAN	0	Input 14	8192	0
IN15	BOOLEAN	0	Input 15	16384	0
IN16	BOOLEAN	0	Input 16	32768	0

The sum of the numbers in column “Value when activated” when all INx (where 1≤x≤16) are active that is=1; is 65535. 65535 is the highest boolean value that can be converted to an integer by the B16I function block.

15.9 Boolean 16 to Integer conversion with logic node representation BTIGAPC

15.9.1 Identification

Function description	IEC 61850 identification	IEC 60617 identification	ANSI/IEEE C37.2 device number
Boolean 16 to integer conversion with logic node representation	BTIGAPC	-	-

15.9.2 Application

Boolean 16 to integer conversion with logic node representation function BTIGAPC is used to transform a set of 16 binary (logical) signals into an integer. BTIGAPC can receive an integer from a station computer – for example, over IEC 61850–8–1. These functions are very useful when you want to generate logical commands (for selector switches or voltage controllers) by inputting an integer number. BTIGAPC has a logical node mapping in IEC 61850.

The Boolean 16 to integer conversion function (BTIGAPC) will transfer a combination of up to 16 binary inputs INx where $1 \leq x \leq 16$ to an integer. Each INx represents a value according to the table below from 0 to 32768. This follows the general formula: $INx = 2^{x-1}$ where $1 \leq x \leq 16$. The sum of all the values on the activated INx will be available on the output OUT as a sum of the values of all the inputs INx that are activated. OUT is an integer. When all INx where $1 \leq x \leq 16$ are activated that is = Boolean 1 it corresponds to that integer 65535 is available on the output OUT. BTIGAPC function is designed for receiving up to 16 booleans input locally. If the BLOCK input is activated, it will freeze the output at the last value.

Values of each of the different OUTx from function block BTIGAPC for $1 \leq x \leq 16$.

The sum of the value on each INx corresponds to the integer presented on the output OUT on the function block BTIGAPC.

Name of input	Type	Default	Description	Value when activated	Value when deactivated
IN1	BOOLEAN	0	Input 1	1	0
IN2	BOOLEAN	0	Input 2	2	0
IN3	BOOLEAN	0	Input 3	4	0
IN4	BOOLEAN	0	Input 4	8	0
IN5	BOOLEAN	0	Input 5	16	0
IN6	BOOLEAN	0	Input 6	32	0
IN7	BOOLEAN	0	Input 7	64	0
IN8	BOOLEAN	0	Input 8	128	0
IN9	BOOLEAN	0	Input 9	256	0
IN10	BOOLEAN	0	Input 10	512	0

Table continues on next page

Name of input	Type	Default	Description	Value when activated	Value when deactivated
IN11	BOOLEAN	0	Input 11	1024	0
IN12	BOOLEAN	0	Input 12	2048	0
IN13	BOOLEAN	0	Input 13	4096	0
IN14	BOOLEAN	0	Input 14	8192	0
IN15	BOOLEAN	0	Input 15	16384	0
IN16	BOOLEAN	0	Input 16	32768	0

The sum of the numbers in column “Value when activated” when all INx (where 1≤x≤16) are active that is=1; is 65535. 65535 is the highest boolean value that can be converted to an integer by the BTIGAPC function block.

15.10 Integer to Boolean 16 conversion IB16

15.10.1 Identification

Function description	IEC 61850 identification	IEC 60617 identification	ANSI/IEEE C37.2 device number
Integer to boolean 16 conversion	IB16	-	-

15.10.2 Application

Integer to boolean 16 conversion function (IB16) is used to transform an integer into a set of 16 binary (logical) signals. It can be used – for example, to connect integer output signals from one function to binary (logical) inputs to another function. IB16 function does not have a logical node mapping.

The Boolean 16 to integer conversion function (IB16) will transfer a combination of up to 16 binary inputs INx where 1≤x≤16 to an integer. Each INx represents a value according to the table below from 0 to 32768. This follows the general formula: INx = 2^{x-1} where 1≤x≤16. The sum of all the values on the activated INx will be available on the output OUT as a sum of the values of all the inputs INx that are activated. OUT is an integer. When all INx where 1≤x≤16 are activated that is = Boolean 1 it corresponds to that integer 65535 is available on the output OUT. IB16 function is designed for receiving up to 16 booleans input locally. If the BLOCK input is activated, it will freeze the output at the last value.

Values of each of the different OUTx from function block IB16 for 1≤x≤16.

The sum of the value on each INx corresponds to the integer presented on the output OUT on the function block IB16.

Name of input	Type	Default	Description	Value when activated	Value when deactivated
IN1	BOOLEAN	0	Input 1	1	0
IN2	BOOLEAN	0	Input 2	2	0
IN3	BOOLEAN	0	Input 3	4	0
IN4	BOOLEAN	0	Input 4	8	0
IN5	BOOLEAN	0	Input 5	16	0
IN6	BOOLEAN	0	Input 6	32	0
IN7	BOOLEAN	0	Input 7	64	0
IN8	BOOLEAN	0	Input 8	128	0
IN9	BOOLEAN	0	Input 9	256	0
IN10	BOOLEAN	0	Input 10	512	0
IN11	BOOLEAN	0	Input 11	1024	0
IN12	BOOLEAN	0	Input 12	2048	0
IN13	BOOLEAN	0	Input 13	4096	0
IN14	BOOLEAN	0	Input 14	8192	0
IN15	BOOLEAN	0	Input 15	16384	0
IN16	BOOLEAN	0	Input 16	32768	0

The sum of the numbers in column “Value when activated” when all INx (where $1 \leq x \leq 16$) are active that is=1; is 65535. 65535 is the highest boolean value that can be converted to an integer by the IB16 function block.

15.11 Integer to Boolean 16 conversion with logic node representation ITBGAPC

15.11.1 Identification

Function description	IEC 61850 identification	IEC 60617 identification	ANSI/IEEE C37.2 device number
Integer to boolean 16 conversion with logic node representation	ITBGAPC	-	-

15.11.2 Application

Integer to boolean 16 conversion with logic node representation function (ITBGAPC) is used to transform an integer into a set of 16 boolean signals. ITBGAPC function can receive an integer from a station computer – for example, over IEC 61850–8–1. This function is very useful when the user wants to generate logical commands (for selector switches or voltage controllers) by inputting an integer number. ITBGAPC function has a logical node mapping in IEC 61850.

The Integer to Boolean 16 conversion with logic node representation function (ITBGAPC) will transfer an integer with a value between 0 to 65535 communicated via IEC61850 and connected to the ITBGAPC function block to a combination of activated outputs OUTx where 1≤x≤16.

The values of the different OUTx are according to the Table 35.

If the BLOCK input is activated, it freezes the logical outputs at the last value.

Table 35: Output signals

Name of OUTx	Type	Description	Value when activated	Value when deactivated
OUT1	BOOLEAN	Output 1	1	0
OUT2	BOOLEAN	Output 2	2	0
OUT3	BOOLEAN	Output 3	4	0
OUT4	BOOLEAN	Output 4	8	0
OUT5	BOOLEAN	Output 5	16	0
OUT6	BOOLEAN	Output 6	32	0
OUT7	BOOLEAN	Output 7	64	0
OUT8	BOOLEAN	Output 8	128	0
OUT9	BOOLEAN	Output 9	256	0
OUT10	BOOLEAN	Output 10	512	0
OUT11	BOOLEAN	Output 11	1024	0
OUT12	BOOLEAN	Output 12	2048	0
OUT13	BOOLEAN	Output 13	4096	0
OUT14	BOOLEAN	Output 14	8192	0
OUT15	BOOLEAN	Output 15	16384	0
OUT16	BOOLEAN	Output 16	32768	0

The sum of the numbers in column “Value when activated” when all OUTx (1≤x≤16) are active equals 65535. This is the highest integer that can be converted by the ITBGAPC function block.

15.12 Elapsed time integrator with limit transgression and overflow supervision TEIGAPC

15.12.1 Identification

Function Description	IEC 61850 identification	IEC 60617 identification	ANSI/IEEE C37.2 device number
Elapsed time integrator	TEIGAPC	-	-

15.12.2 Application

The function TEIGAPC is used for user-defined logics and it can also be used for different purposes internally in the IED. An application example is the integration of elapsed time during the measurement of neutral point voltage or neutral current at earth-fault conditions.

Settable time limits for warning and alarm are provided. The time limit for overflow indication is fixed to 999999.9 seconds.

15.12.3 Setting guidelines

The settings *tAlarm* and *tWarning* are user settable limits defined in seconds. The achievable resolution of the settings depends on the level of the values defined.

A resolution of 10 ms can be achieved when the settings are defined within the range

1.00 second ≤ *tAlarm* ≤ *99 999.99* seconds

1.00 second ≤ *tWarning* ≤ *99 999.99* seconds.

If the values are above this range the resolution becomes lower

99 999.99 seconds ≤ *tAlarm* ≤ *999 999.9* seconds

99 999.99 seconds≤ *tWarning* ≤ *999 999.9* seconds

Note that *tAlarm* and *tWarning* are independent settings, that is, there is no check if *tAlarm* > *tWarning*.

The limit for the overflow supervision is fixed at 999999.9 seconds.

Section 16 Monitoring

16.1 Measurement

16.1.1 Identification

Function description	IEC 61850 identification	IEC 60617 identification	ANSI/IEEE C37.2 device number
Measurements	CVMMXN	*P, Q, S, I, U, f*	-
Phase current measurement	CMMXU	*I*	-
Phase-phase voltage measurement	VMMXU	*U*	-
Current sequence component measurement	CMSQI	*I1, I2, I0*	-
Voltage sequence component measurement	VMSQI	*U1, U2, U0*	-
Phase-neutral voltage measurement	VNMMXU	*U*	-

16.1.2 Application

Measurement functions is used for power system measurement, supervision and reporting to the local HMI, monitoring tool within PCM600 or to station level for example, via IEC 61850. The possibility to continuously monitor measured values of active power, reactive power, currents, voltages, frequency, power factor etc. is vital for efficient production, transmission and distribution of electrical energy. It provides to the system operator fast and easy overview of the present status of the power system. Additionally, it can be used during testing and commissioning of protection and control IEDs in order to verify proper operation and connection of instrument transformers (CTs and VTs). During normal service by periodic comparison of the measured value from the IED with other independent meters the proper operation of the IED analog measurement chain can be verified. Finally, it can be used to verify proper direction orientation for distance or directional overcurrent protection function.

The available measured values of an IED are depending on the actual hardware (TRM) and the logic configuration made in PCM600.

All measured values can be supervised with four settable limits that is, low-low limit, low limit, high limit and high-high limit. A zero clamping reduction is also supported, that is, the measured value below a settable limit is forced to zero which reduces the impact of noise in the inputs.

Dead-band supervision can be used to report measured signal value to station level when change in measured value is above set threshold limit or time integral of all changes since the last time value updating exceeds the threshold limit. Measure value can also be based on periodic reporting.

Main menu/Measurement/Monitoring/Service values/CVMMXN

The measurement function, CVMMXN, provides the following power system quantities:

- P, Q and S: three phase active, reactive and apparent power
- PF: power factor
- V: phase-to-phase voltage magnitude
- I: phase current magnitude
- F: power system frequency

,

The measuring functions CMMXU, VMMXU and VNMMXU provide physical quantities:

- I: phase currents (magnitude and angle) (CMMXU)
- V: voltages (phase-to-ground and phase-to-phase voltage, magnitude and angle) (VMMXU, VNMMXU)

The CVMMXN function calculates three-phase power quantities by using fundamental frequency phasors (DFT values) of the measured current respectively voltage signals. The measured power quantities are available either, as instantaneously calculated quantities or, averaged values over a period of time (low pass filtered) depending on the selected settings.

It is possible to calibrate the measuring function above to get better then class 0.5 presentation. This is accomplished by angle and magnitude compensation at 5, 30 and 100% of rated current and at 100% of rated voltage.

The power system quantities provided, depends on the actual hardware, (TRM) and the logic configuration made in PCM600.

The measuring functions CMSQI and VMSQI provide sequence component quantities:

- I: sequence currents (positive, zero, negative sequence, magnitude and angle)
- V: sequence voltages (positive, zero and negative sequence, magnitude and angle).

16.1.3 Zero clamping

The measuring functions, CVMMXN, CMMXU, VMMXU and VNMMXU have no interconnections regarding any setting or parameter.

Zero clampings are also entirely handled by the *ZeroDb* for each and every signal separately for each of the functions. For example, the zero clamping of *U12* is handled by *UL12ZeroDb* in VMMXU, zero clamping of I1 is handled by *IL1ZeroDb* in CMMXU ETC.

Example how CVMMXN is operating:

The following outputs can be observed on the local HMI under **Monitoring/ Servicevalues/SRV1**

S	Apparent three-phase power
P	Active three-phase power
Q	Reactive three-phase power
PF	Power factor
ILAG	I lagging U
ILEAD	I leading U
U	System mean voltage, calculated according to selected mode
I	System mean current, calculated according to selected mode
F	Frequency

The settings for this function is found under **Setting/General setting/Monitoring/ Service values/SRV1**

It can be seen that:

- When system voltage falls below *UGenZeroDB*, the shown value for S, P, Q, PF, ILAG, ILEAD, U and F on the local HMI is forced to zero
- When system current falls below *IGenZeroDB*, the shown value for S, P, Q, PF, ILAG, ILEAD, U and F on the local HMI is forced to zero
- When the value of a single signal falls below the set dead band for that specific signal, the value shown on the local HMI is forced to zero. For example, if apparent three-phase power falls below *SZeroDb* the value for S on the local HMI is forced to zero.

16.1.4 Setting guidelines

The available setting parameters of the measurement function CVMMXN, CMMXU, VMMXU, CMSQI, VMSQI, VNMMXU are depending on the actual hardware (TRM) and the logic configuration made in PCM600.

The parameters for the Measurement functions CVMMXN, CMMXU, VMMXU, CMSQI, VMSQI, VNMMXU are set via the local HMI or PCM600.

GlobalBaseSel: Selects the global base value group used by the function to define (*IBase*), (*VBase*) and (*SBase*).

Operation: *Disabled*/*Enabled*. Every function instance (CVMMXN, CMMXU, VMMXU, CMSQI, VMSQI, VNMMXU) can be taken in operation (*Enabled*) or out of operation (*Disabled*).

The following general settings can be set for the **Measurement function** (CVMMXN).

PowMagFact: Magnitude factor to scale power calculations.

PowAngComp: Angle compensation for phase shift between measured I & V.

Mode: Selection of measured current and voltage. There are 9 different ways of calculating monitored three-phase values depending on the available VT inputs connected to the IED. See parameter group setting table.

k: Low pass filter coefficient for power measurement, V and I.

VGenZeroDb: Minimum level of voltage in % of VBase used as indication of zero voltage (zero point clamping). If measured value is below *VGenZeroDb* calculated S, P, Q and PF will be zero.

IGenZeroDb: Minimum level of current in % of *IBase* used as indication of zero current (zero point clamping). If measured value is below *IGenZeroDb* calculated S, P, Q and PF will be zero.

VMagCompY: Magnitude compensation to calibrate voltage measurements at Y% of Vn, where Y is equal to 5, 30 or 100.

IMagCompY: Magnitude compensation to calibrate current measurements at Y% of In, where Y is equal to 5, 30 or 100.

IAngCompY: Angle compensation to calibrate angle measurements at Y% of In, where Y is equal to 5, 30 or 100.

Parameters *IBase*, *Ubase* and *SBase* have been implemented as a settings instead of a parameters, which means that if the values of the parameters are changed there will be no restart of the application. As restart is required to activate new parameters values, the IED must be restarted in some way. Either manually or by changing some other parameter at the same time.

The following general settings can be set for the **Phase-phase current measurement** (CMMXU).

IMagCompY: Magnitude compensation to calibrate current measurements at Y% of In, where Y is equal to 5, 30 or 100.

IAngCompY: Angle compensation to calibrate angle measurements at Y% of In, where Y is equal to 5, 30 or 100.

The following general settings can be set for the **Phase-phase voltage measurement** (VMMXU).

VMagCompY: Amplitude compensation to calibrate voltage measurements at Y% of Vn, where Y is equal to 5, 30 or 100.

VAngCompY: Angle compensation to calibrate angle measurements at Y% of Vn, where Y is equal to 5, 30 or 100.

The following general settings can be set for **all monitored quantities** included in the functions (CVMMXN, CMMXU, VMMXU, CMSQI, VMSQI, VNMMXU) X in setting names below equals S, P, Q, PF, V, I, F, IA,IB,IC, VA, VB, VCVAB, VBC, VCA, I1, I2, 3I0, V1, V2 or 3V0.

Xmin: Minimum value for analog signal X set directly in applicable measuring unit.

Xmax: Maximum value for analog signal X.

XZeroDb: Zero point clamping. A signal value less than *XZeroDb* is forced to zero.

Observe the related zero point clamping settings in Setting group N for CVMMXN (*VGenZeroDb* and *IGenZeroDb*). If measured value is below *VGenZeroDb* and/or *IGenZeroDb* calculated S, P, Q and PF will be zero and these settings will override *XZeroDb*.

XRepTyp: Reporting type. Cyclic (*Cyclic*), magnitude deadband (*Dead band*) or integral deadband (*Int deadband*). The reporting interval is controlled by the parameter *XDbRepInt*.

XDbRepInt: Reporting deadband setting. Cyclic reporting is the setting value and is reporting interval in seconds. Magnitude deadband is the setting value in % of measuring range. Integral deadband setting is the integral area, that is, measured value in % of measuring range multiplied by the time between two measured values.

XHiHiLim: High-high limit. Set in applicable measuring unit.

XHiLim: High limit.

XLowLim: Low limit.

XLowLowLim: Low-low limit.

XLimHyst: Hysteresis value in % of range and is common for all limits.

All phase angles are presented in relation to defined reference channel. The parameter *PhaseAngleRef* defines the reference, see section "".

Calibration curves

It is possible to calibrate the functions (CVMMXN, CMMXU, VMMXU and VNMMXU) to get class 0.5 presentations of currents, voltages and powers. This is accomplished by magnitude and angle compensation at 5, 30 and 100% of rated current and voltage. The compensation curve will have the characteristic for magnitude and angle compensation of currents as shown in figure 184 (example). The first phase will be used as reference channel and compared with the curve for calculation of factors. The factors will then be used for all related channels.

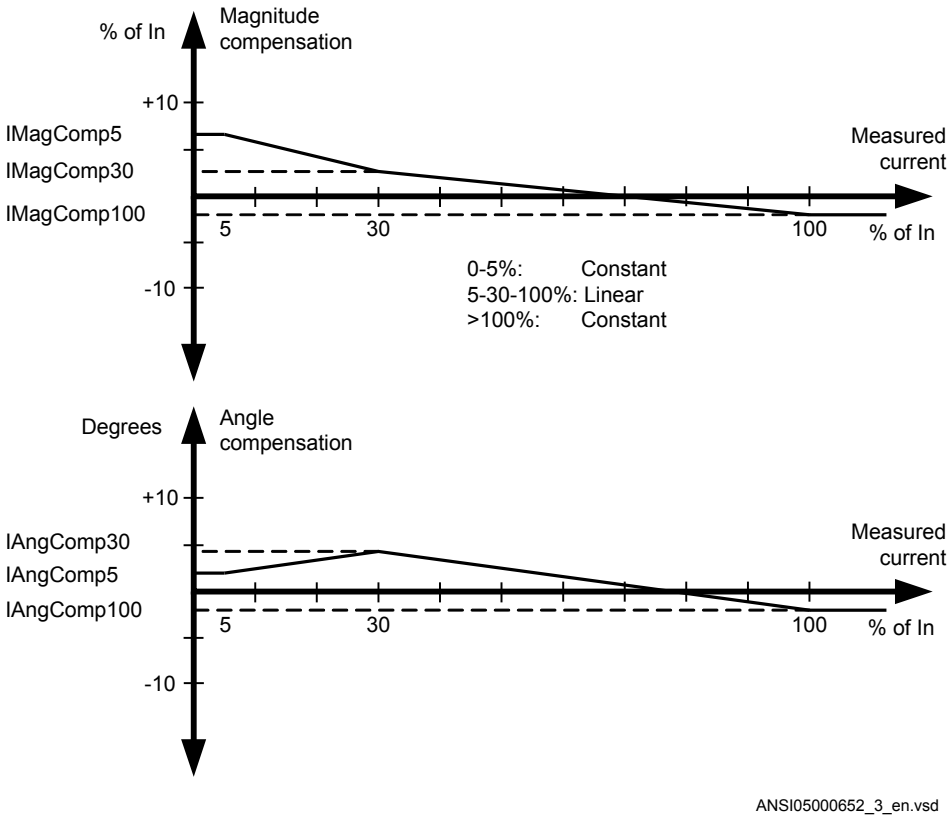

Figure 184: Calibration curves

16.1.4.1 Setting examples

Three setting examples, in connection to Measurement function (CVMMXN), are provided:

- Measurement function (CVMMXN) application for a OHL
- Measurement function (CVMMXN) application on the secondary side of a transformer
- Measurement function (CVMMXN) application for a generator

For each of them detail explanation and final list of selected setting parameters values will be provided.

The available measured values of an IED are depending on the actual hardware (TRM) and the logic configuration made in PCM600.

Measurement function application for a 380kV OHL

Single line diagram for this application is given in figure 185:

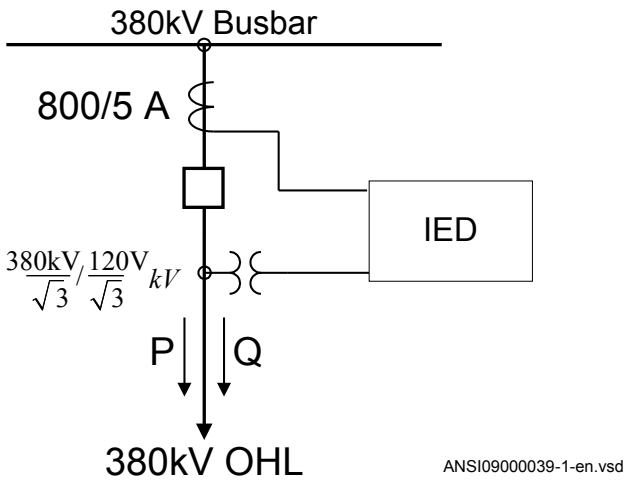

Figure 185: Single line diagram for 380kV OHL application

In order to monitor, supervise and calibrate the active and reactive power as indicated in figure 185 it is necessary to do the following:

1. Set correctly CT and VT data and phase angle reference channel *PhaseAngleRef* (see section "") using PCM600 for analog input channels
2. Connect, in PCM600, measurement function to three-phase CT and VT inputs
3. Set under General settings parameters for the Measurement function:
   - general settings as shown in table 36.
   - level supervision of active power as shown in table 37.
   - calibration parameters as shown in table 38.

Table 36: General settings parameters for the Measurement function

Setting	Short Description	Selected value	Comments
Operation	Operation Off/On	On	Function must be *On*
PowAmpFact	Amplitude factor to scale power calculations	1.000	It can be used during commissioning to achieve higher measurement accuracy. Typically no scaling is required
PowAngComp	Angle compensation for phase shift between measured I & U	0.0	It can be used during commissioning to achieve higher measurement accuracy. Typically no angle compensation is required. As well here required direction of P & Q measurement is towards protected object (as per IED internal default direction)
Mode	Selection of measured current and voltage	L1, L2, L3	All three phase-to-ground VT inputs are available
k	Low pass filter coefficient for power measurement, V and I	0.00	Typically no additional filtering is required
VGenZeroDb	Zero point clamping in % of Ubase	25	Set minimum voltage level to 25%. Voltage below 25% will force S, P and Q to zero.
IGenZeroDb	Zero point clamping in % of Ibase	3	Set minimum current level to 3%. Current below 3% will force S, P and Q to zero.
VBase (set in Global base)	Base setting for voltage level in kV	400.00	Set rated OHL phase-to-phase voltage
IBase (set in Global base)	Base setting for current level in A	800	Set rated primary CT current used for OHL

Table 37: Settings parameters for level supervision

Setting	Short Description	Selected value	Comments
PMin	Minimum value	-100	Minimum expected load
PMax	Minimum value	100	Maximum expected load
PZeroDb	Zero point clamping in 0.001% of range	3000	Set zero point clamping to 45 MW that is, 3% of 200 MW
PRepTyp	Reporting type	db	Select magnitude deadband supervision
PDbRepInt	Cycl: Report interval (s), Db: In % of range, Int Db: In %s	2	Set ±Δdb=30 MW that is, 2% (larger changes than 30 MW will be reported)
PHiHiLim	High High limit (physical value)	60	High alarm limit that is, extreme overload alarm
PHiLim	High limit (physical value)	50	High warning limit that is, overload warning
Table continues on next page			

Setting	Short Description	Selected value	Comments
PLowLim	Low limit (physical value)	-50	Low warning limit. Not active
PLowLowlLim	Low Low limit (physical value)	-60	Low alarm limit. Not active
PLimHyst	Hysteresis value in % of range (common for all limits)	2	Set ±Δ Hysteresis MW that is, 2%

Table 38: Settings for calibration parameters

Setting	Short Description	Selected value	Comments
IMagComp5	Magnitude factor to calibrate current at 5% of In	0.00	
IMagComp30	Magnitude factor to calibrate current at 30% of In	0.00	
IMagComp100	Magnitude factor to calibrate current at 100% of In	0.00	
VAmpComp5	Magnitude factor to calibrate voltage at 5% of Vn	0.00	
VMagComp30	Magnitude factor to calibrate voltage at 30% of Vn	0.00	
VMagComp100	Magnitude factor to calibrate voltage at 100% of Vn	0.00	
IAngComp5	Angle calibration for current at 5% of In	0.00	
IAngComp30	Angle pre-calibration for current at 30% of In	0.00	
IAngComp100	Angle pre-calibration for current at 100% of In	0.00	

Measurement function application for a power transformer

Single line diagram for this application is given in figure 186.

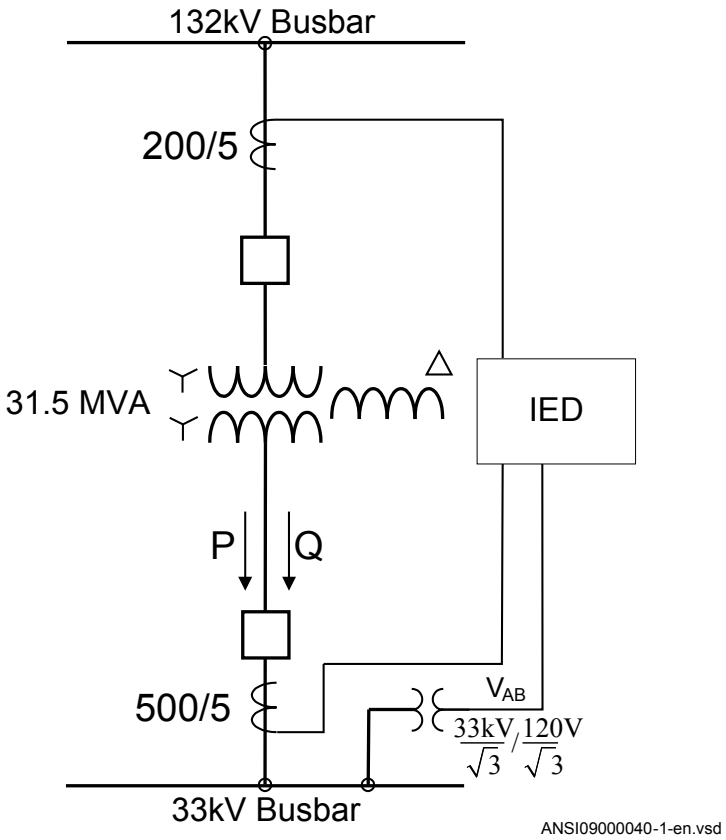

Figure 186: Single line diagram for transformer application

In order to measure the active and reactive power as indicated in figure 186, it is necessary to do the following:

1. Set correctly all CT and VT and phase angle reference channel *PhaseAngleRef* (see section "") data using PCM600 for analog input channels
2. Connect, in PCM600, measurement function to LV side CT & VT inputs
3. Set the setting parameters for relevant Measurement function as shown in the following table 39:

Table 39: General settings parameters for the Measurement function

Setting	Short description	Selected value	Comment
Operation	Operation *Disabled/Enabled*	*Enabled*	Function must be *Enabled*
PowAmpFact	Magnitude factor to scale power calculations	1.000	Typically no scaling is required
PowAngComp	Angle compensation for phase shift between measured I & V	180.0	Typically no angle compensation is required. However here the required direction of P & Q measurement is towards busbar (Not per IED internal default direction). Therefore angle compensation have to be used in order to get measurements in aliment with the required direction.
Mode	Selection of measured current and voltage	L1L2	Only UL1L2 phase-to-phase voltage is available
k	Low pass filter coefficient for power measurement, V and I	0.00	Typically no additional filtering is required
VGenZeroDb	Zero point clamping in % of Vbase	25	Set minimum voltage level to 25%
IGenZeroDb	Zero point clamping in % of Ibase	3	Set minimum current level to 3%
VBase (set in Global base)	Base setting for voltage level in kV	35.00	Set LV side rated phase-to-phase voltage
IBase (set in Global base)	Base setting for current level in A	495	Set transformer LV winding rated current

Measurement function application for a generator

Single line diagram for this application is given in figure 187.

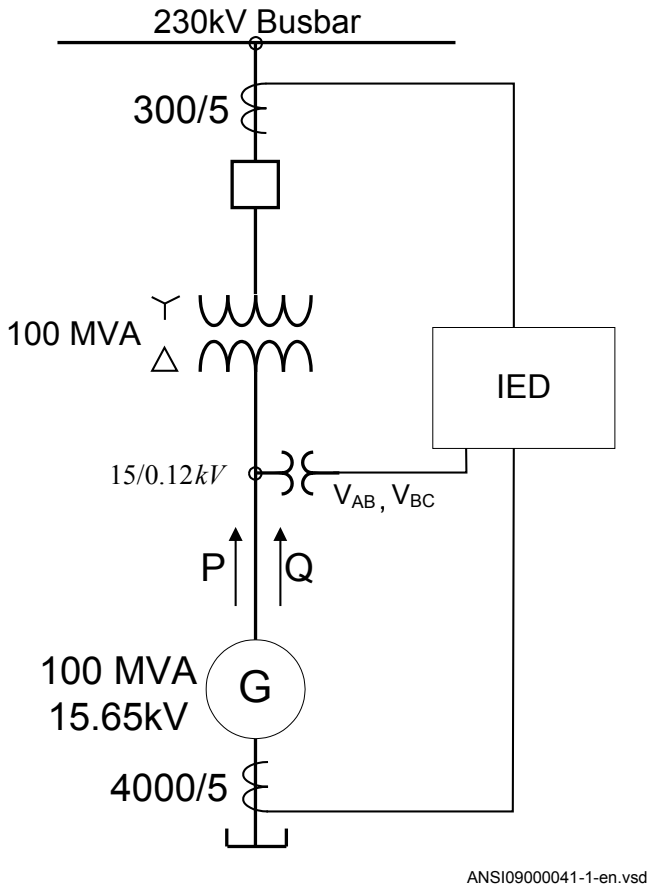

Figure 187: Single line diagram for generator application

In order to measure the active and reactive power as indicated in figure 187, it is necessary to do the following:

1. Set correctly all CT and VT data and phase angle reference channel *PhaseAngleRef*(see section "") using PCM600 for analog input channels
2. Connect, in PCM600, measurement function to the generator CT & VT inputs
3. Set the setting parameters for relevant Measurement function as shown in the following table:

Table 40: General settings parameters for the Measurement function

Setting	Short description	Selected value	Comment
Operation	Operation Off/On	On	Function must be *On*
PowAmpFact	Amplitude factor to scale power calculations	1.000	Typically no scaling is required
PowAngComp	Angle compensation for phase shift between measured I & V	0.0	Typically no angle compensation is required. As well here required direction of P & Q measurement is towards protected object (as per IED internal default direction)
Mode	Selection of measured current and voltage	Arone	Generator VTs are connected between phases (V-connected)
k	Low pass filter coefficient for power measurement, V and I	0.00	Typically no additional filtering is required
VGenZeroDb	Zero point clamping in % of Vbase	25%	Set minimum voltage level to 25%
IGenZeroDb	Zero point clamping in % of Ibase	3	Set minimum current level to 3%
VBase (set in Global base)	Base setting for voltage level in kV	15,65	Set generator rated phase-to-phase voltage
IBase (set in Global base)	Base setting for current level in A	3690	Set generator rated current

16.2 Gas medium supervision SSIMG (63)

16.2.1 Identification

Function description	IEC 61850 identification	IEC 60617 identification	ANSI/IEEE C37.2 device number
Gas medium supervision	SSIMG	-	63

16.2.2 Application

Gas medium supervision (SSIMG ,63) is used for monitoring the circuit breaker condition. Proper arc extinction by the compressed gas in the circuit breaker is very important. When the pressure becomes too low compared to the required value, the circuit breaker operation shall be blocked to minimize the risk of internal failure. Binary information based on the gas pressure in the circuit breaker is used as an input signal to the function. The function generates alarms based on the received information.

16.3 Liquid medium supervision SSIML (71)

16.3.1 Identification

Function description	IEC 61850 identification	IEC 60617 identification	ANSI/IEEE C37.2 device number
Liquid medium supervision	SSIML	-	71

16.3.2 Application

Liquid medium supervision (SSIML ,71) is used for monitoring the circuit breaker condition. Proper arc extinction by the compressed oil in the circuit breaker is very important. When the level becomes too low, compared to the required value, the circuit breaker operation is blocked to minimize the risk of internal failures. Binary information based on the oil level in the circuit breaker is used as input signals to the function. In addition to that, the function generates alarms based on received information.

16.4 Breaker monitoring SSCBR

16.4.1 Identification

Function description	IEC 61850 identification	IEC 60617 identification	ANSI/IEEE C37.2 device number
Breaker monitoring	SSCBR	-	-

16.4.2 Application

The circuit breaker maintenance is usually based on regular time intervals or the number of operations performed. This has some disadvantages because there could be a number of abnormal operations or few operations with high-level currents within the predetermined maintenance interval. Hence, condition-based maintenance scheduling is an optimum solution in assessing the condition of circuit breakers.

Circuit breaker contact travel time

Auxiliary contacts provide information about the mechanical operation, opening time and closing time of a breaker. Detecting an excessive traveling time is essential to indicate the need for maintenance of the circuit breaker mechanism. The excessive travel time can be due to problems in the driving mechanism or failures of the contacts.

Circuit breaker status

Monitoring the breaker status ensures proper functioning of the features within the protection relay such as breaker control, breaker failure and autoreclosing. The breaker status is monitored using breaker auxiliary contacts. The breaker status is indicated by the binary outputs. These signals indicate whether the circuit breaker is in an open, closed or error state.

Remaining life of circuit breaker

Every time the breaker operates, the circuit breaker life reduces due to wear. The wear in a breaker depends on the interrupted current. For breaker maintenance or replacement at the right time, the remaining life of the breaker must be estimated. The remaining life of a breaker can be estimated using the maintenance curve provided by the circuit breaker manufacturer.

Circuit breaker manufacturers provide the number of make-break operations possible at various interrupted currents. An example is shown in Figure188.

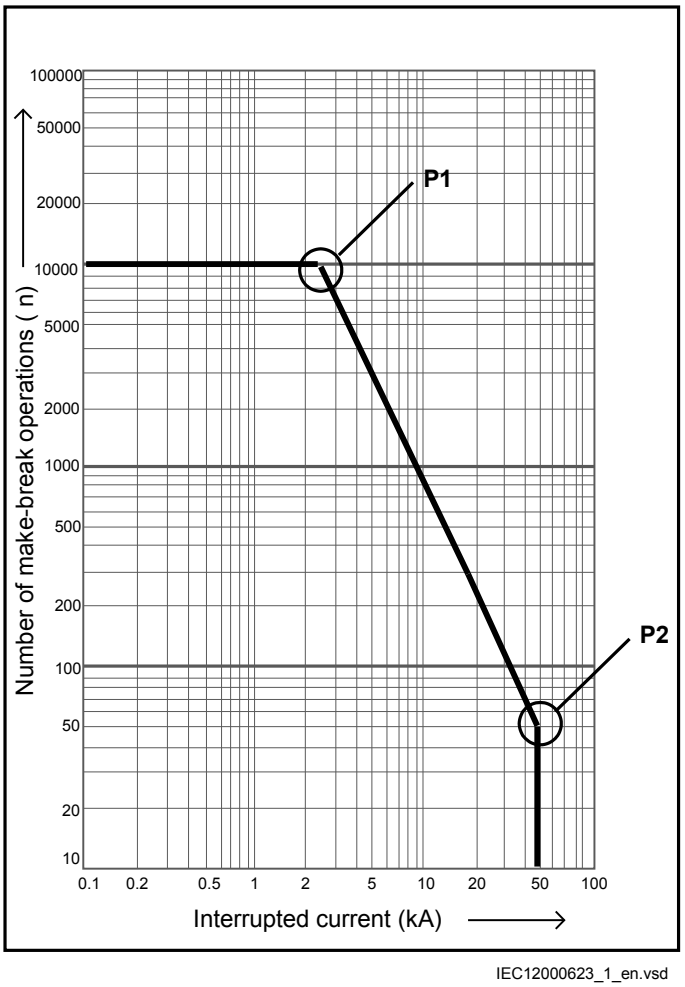

Figure 188: An example for estimating the remaining life of a circuit breaker

Calculation for estimating the remaining life

The graph shows that there are 10000 possible operations at the rated operating current and 900 operations at 10 kA and 50 operations at rated fault current. Therefore, if the interrupted current is 10 kA, one operation is equivalent to 10000/900 = 11 operations at the rated current. It is assumed that prior to tripping, the remaining life of a breaker is 10000 operations. Remaining life calculation for three different interrupted current conditions is explained below.

- Breaker interrupts at and below the rated operating current, that is, 2 kA, the remaining life of the CB is decreased by 1 operation and therefore, 9999 operations remaining at the rated operating current.
- Breaker interrupts between rated operating current and rated fault current, that is, 10 kA, one operation at 10kA is equivalent to 10000/900 = 11 operations at the rated current. The remaining life of the CB would be (10000 – 10) = 9989 at the rated operating current after one operation at 10 kA.
- Breaker interrupts at and above rated fault current, that is, 50 kA, one operation at 50 kA is equivalent to 10000/50 = 200 operations at the rated operating current. The remaining life of the CB would become (10000 – 200) = 9800 operations at the rated operating current after one operation at 50 kA.

Accumulated energy

Monitoring the contact erosion and interrupter wear has a direct influence on the required maintenance frequency. Therefore, it is necessary to accurately estimate the erosion of the contacts and condition of interrupters using cumulative summation of I^y. The factor "y" depends on the type of circuit breaker. The energy values were accumulated using the current value and exponent factor for CB contact opening duration. When the next CB opening operation is started, the energy is accumulated from the previous value. The accumulated energy value can be reset to initial accumulation energy value by using the Reset accumulating energy input, `RSTIPOW`.

Circuit breaker operation cycles

Routine breaker maintenance like lubricating breaker mechanism is based on the number of operations. A suitable threshold setting helps in preventive maintenance. This can also be used to indicate the requirement for oil sampling for dielectric testing in case of an oil circuit breaker.

Circuit breaker operation monitoring

By monitoring the activity of the number of operations, it is possible to calculate the number of days the breaker has been inactive. Long periods of inactivity degrade the reliability for the protection system.

Circuit breaker spring charge monitoring

For normal circuit breaker operation, the circuit breaker spring should be charged within a specified time. Detecting a long spring charging time indicates the time for circuit breaker maintenance. The last value of the spring charging time can be given as a service value.

Circuit breaker gas pressure indication

For proper arc extinction by the compressed gas in the circuit breaker, the pressure of the gas must be adequate. Binary input available from the pressure sensor is based on the

pressure levels inside the arc chamber. When the pressure becomes too low compared to the required value, the circuit breaker operation is blocked.

16.4.3 Setting guidelines

The breaker monitoring function is used to monitor different parameters of the circuit breaker. The breaker requires maintenance when the number of operations has reached a predefined value. For proper functioning of the circuit breaker, it is also essential to monitor the circuit breaker operation, spring charge indication or breaker wear, travel time, number of operation cycles and accumulated energy during arc extinction.

16.4.3.1 Setting procedure on the IED

The parameters for breaker monitoring (SSCBR) can be set using the local HMI or Protection and Control Manager (PCM600).

Common base IED values for primary current (*IBase*), primary voltage (*VBase*) and primary power (*SBase*) are set in Global base values for settings function GBASVAL.

GlobalBaseSel: It is used to select a GBASVAL function for reference of base values.

Operation: *Enabled* or *Disabled*.

IBase: Base phase current in primary A. This current is used as reference for current settings.

OpenTimeCorr: Correction factor for circuit breaker opening travel time.

CloseTimeCorr: Correction factor for circuit breaker closing travel time.

tTrOpenAlm: Setting of alarm level for opening travel time.

tTrCloseAlm: Setting of alarm level for closing travel time.

OperAlmLevel: Alarm limit for number of mechanical operations.

OperLOLevel: Lockout limit for number of mechanical operations.

CurrExponent: Current exponent setting for energy calculation. It varies for different types of circuit breakers. This factor ranges from *0.5* to *3.0*.

AccStopCurr: RMS current setting below which calculation of energy accumulation stops. It is given as a percentage of *IBase*.

ContTrCorr: Correction factor for time difference in auxiliary and main contacts' opening time.

AlmAccCurrPwr: Setting of alarm level for accumulated energy.

LOAccCurrPwr: Lockout limit setting for accumulated energy.

SpChAlmTime: Time delay for spring charging time alarm.

tDGasPresAlm: Time delay for gas pressure alarm.

tDGasPresLO: Time delay for gas pressure lockout.

DirCoef: Directional coefficient for circuit breaker life calculation.

RatedOperCurr: Rated operating current of the circuit breaker.

RatedFltCurr: Rated fault current of the circuit breaker.

OperNoRated: Number of operations possible at rated current.

OperNoFault: Number of operations possible at rated fault current.

CBLifeAlmLevel: Alarm level for circuit breaker remaining life.

AccSelCal: Selection between the method of calculation of accumulated energy.

OperTimeDelay: Time delay between change of status of trip output and start of main contact separation.

16.5 Event function EVENT

16.5.1 Identification

Function description	IEC 61850 identification	IEC 60617 identification	ANSI/IEEE C37.2 device number
Event function	EVENT		-

16.5.2 Application

When using a Substation Automation system with LON or SPA communication, time-tagged events can be sent at change or cyclically from the IED to the station level. These events are created from any available signal in the IED that is connected to the Event function (EVENT). The event function block is used for remote communication.

Analog and double indication values are also transferred through EVENT function.

16.5.3 Setting guidelines

The parameters for the Event (EVENT) function are set via the local HMI or PCM600.

EventMask (Ch_1 - 16)

The inputs can be set individually as:

- *NoEvents*
- *OnSet*, at pick-up of the signal
- *OnReset*, at drop-out of the signal
- *OnChange*, at both pick-up and drop-out of the signal
- *AutoDetect*

LONChannelMask or *SPAChannelMask*

Definition of which part of the event function block that shall generate events:

- *Disabled*
- *Channel 1-8*
- *Channel 9-16*
- *Channel 1-16*

MinRepIntVal (1 - 16)

A time interval between cyclic events can be set individually for each input channel. This can be set between 0.0 s to 1000.0 s in steps of 0.1 s. It should normally be set to 0, that is, no cyclic communication.

It is important to set the time interval for cyclic events in an optimized way to minimize the load on the station bus.

16.6 Disturbance report DRPRDRE

16.6.1 Identification

Function description	IEC 61850 identification	IEC 60617 identification	ANSI/IEEE C37.2 device number
Analog input signals	A41RADR	-	-
Disturbance report	DRPRDRE	-	-
Disturbance report	A1RADR	-	-
Disturbance report	A2RADR	-	-
Disturbance report	A3RADR	-	-
Disturbance report	A4RADR	-	-
Disturbance report	B1RBDR	-	-
Disturbance report	B2RBDR	-	-
Disturbance report	B3RBDR	-	-
Disturbance report	B4RBDR	-	-
Disturbance report	B5RBDR	-	-
Disturbance report	B6RBDR	-	-

16.6.2 Application

To get fast, complete and reliable information about disturbances in the primary and/or in the secondary system it is very important to gather information on fault currents, voltages and events. It is also important having a continuous event-logging to be able to monitor in an overview perspective. These tasks are accomplished by the disturbance report function DRPRDRE and facilitate a better understanding of the power system behavior and related primary and secondary equipment during and after a disturbance. An analysis of the recorded data provides valuable information that can be used to explain a disturbance, basis for change of IED setting plan, improve existing equipment, and so on. This information can also be used in a longer perspective when planning for and designing new installations, that is, a disturbance recording could be a part of Functional Analysis (FA).

Disturbance report DRPRDRE, always included in the IED, acquires sampled data of all selected analog and binary signals connected to the function blocks that is,

- maximum 30 external analog signals,
- 10 internal derived analog signals, and
- 96 binary signals.

Disturbance report function is a common name for several functions that is, Indications (IND), Event recorder (ER), Sequential of events (SOE), Trip value recorder (TVR), Disturbance recorder (DR) and Fault locator (FL).

Disturbance report function is characterized by great flexibility as far as configuration, starting conditions, recording times, and large storage capacity are concerned. Thus, disturbance report is not dependent on the operation of protective functions, and it can record disturbances that were not discovered by protective functions for one reason or another. Disturbance report can be used as an advanced stand-alone disturbance recorder.

Every disturbance report recording is saved in the IED. The same applies to all events, which are continuously saved in a ring-buffer. Local HMI can be used to get information about the recordings, and the disturbance report files may be uploaded in the PCM600 using the Disturbance handling tool, for report reading or further analysis (using WaveWin, that can be found on the PCM600 installation CD). The user can also upload disturbance report files using FTP or MMS (over 61850–8–1) clients.

If the IED is connected to a station bus (IEC 61850-8-1), the disturbance recorder (record made and fault number) and the fault locator information are available as GOOSE or Report Control data. The same information is obtainable if IEC60870-5-103 is used.

16.6.3 Setting guidelines

The setting parameters for the Disturbance report function DRPRDRE are set via the local HMI or PCM600.

It is possible to handle up to 40 analog and 96 binary signals, either internal signals or signals coming from external inputs. The binary signals are identical in all functions that is, Disturbance recorder (DR), Event recorder (ER), Indication (IND), Trip value recorder (TVR) and Sequential of events (SOE) function.

User-defined names of binary and analog input signals is set using PCM600. The analog and binary signals appear with their user-defined names. The name is used in all related functions (Disturbance recorder (DR), Event recorder (ER), Indication (IND), Trip value recorder (TVR) and Sequential of events (SOE)).

Figure 189 shows the relations between Disturbance report, included functions and function blocks. Sequential of events (SOE), Event recorder (ER) and Indication (IND) uses information from the binary input function blocks (BxRBDR). Trip value recorder (TVR) uses analog information from the analog input function blocks (AxRADR), which is used by Fault locator (FL) after estimation by Trip Value Recorder (TVR). Disturbance report function acquires information from both AxRADR and BxRBDR.

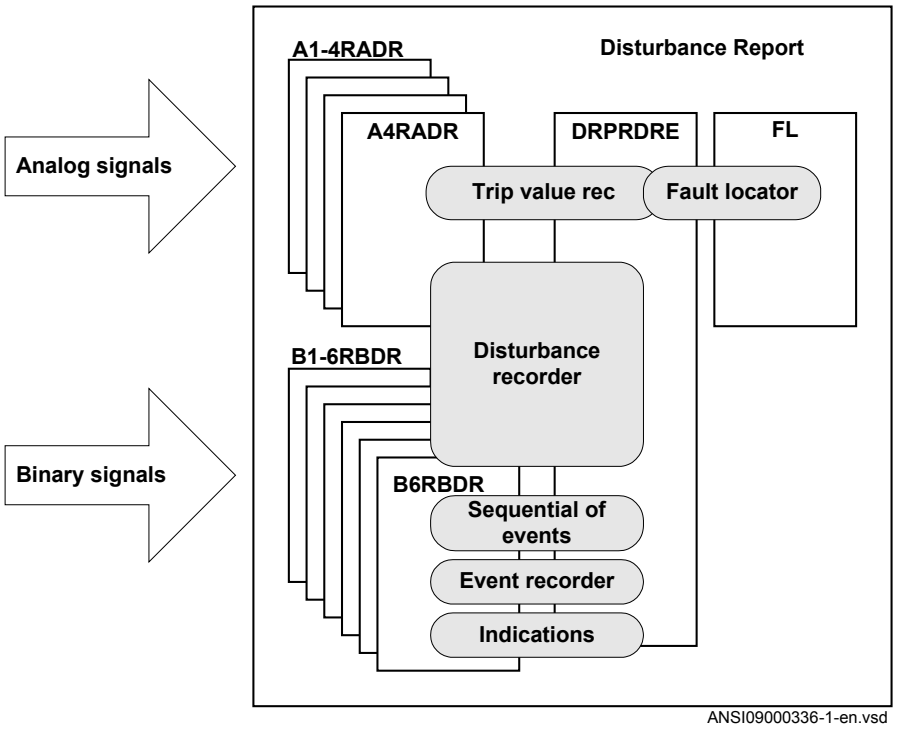

Figure 189: Disturbance report functions and related function blocks

For Disturbance report function there are a number of settings which also influences the sub-functions.

Three LED indications placed above the LCD screen makes it possible to get quick status information about the IED.

Green LED:	
Steady light	In Service
Flashing light	Internal failure
Dark	No power supply
Yellow LED:	
Steady light	A Disturbance Report is triggered
Flashing light	The IED is in test mode
Red LED:	
Steady light	Triggered on binary signal N with *SetLEDN* = *Enabled*

Operation

The operation of Disturbance report function DRPRDRE has to be set *Enabled* or *Disabled*. If *Disabled* is selected, note that no disturbance report is registered, and none sub-function will operate (the only general parameter that influences Sequential of events (SOE)).

Operation = *Disabled*:

- Disturbance reports are not stored.
- LED information (yellow - pickup, red - trip) is not stored or changed.

Operation = *Enabled*:

- Disturbance reports are stored, disturbance data can be read from the local HMI and from a PC using PCM600.
- LED information (yellow - pickup, red - trip) is stored.

Every recording will get a number (0 to 999) which is used as identifier (local HMI, disturbance handling tool and IEC 61850). An alternative recording identification is date, time and sequence number. The sequence number is automatically increased by one for each new recording and is reset to zero at midnight. The maximum number of recordings stored in the IED is 100. The oldest recording will be overwritten when a new recording arrives (FIFO).

To be able to delete disturbance records, *Operation* parameter has to be *Enabled*.

The maximum number of recordings depend on each recordings total recording time. Long recording time will reduce the number of recordings to less than 100.

The IED flash disk should NOT be used to store any user files. This might cause disturbance recordings to be deleted due to lack of disk space.

16.6.3.1 Recording times

Prefault recording time (*PreFaultRecT*) is the recording time before the starting point of the disturbance. The setting should be at least *0.1* s to ensure enough samples for the estimation of pre-fault values in the Trip value recorder (TVR) function.

Postfault recording time (*PostFaultRecT*) is the maximum recording time after the disappearance of the trig-signal (does not influence the Trip value recorder (TVR) function).

Recording time limit (*TimeLimit*) is the maximum recording time after trig. The parameter limits the recording time if some trigging condition (fault-time) is very long or permanently set (does not influence the Trip value recorder (TVR) function).

Post retrigger (*PostRetrig*) can be set to *Enabled* or *Disabled*. Makes it possible to choose performance of Disturbance report function if a new trig signal appears in the post-fault window.

PostRetrig = Disabled

The function is insensitive for new trig signals during post fault time.

PostRetrig = Enabled

The function completes current report and starts a new complete report that is, the latter will include:

- new pre-fault- and fault-time (which will overlap previous report)
- events and indications might be saved in the previous report too, due to overlap
- new fault locator and trip value calculations if installed, in operation and started

Operation in test mode

If the IED is in test mode and *OpModeTest = Disabled*. Disturbance report function does not save any recordings and no LED information is displayed.

If the IED is in test mode and *OpModeTest = Enabled*. Disturbance report function works in normal mode and the status is indicated in the saved recording.

16.6.3.2 Binary input signals

Up to 96 binary signals can be selected among internal logical and binary input signals. The configuration tool is used to configure the signals.

For each of the 96 signals, it is also possible to select if the signal is to be used as a trigger for the start of the Disturbance report and if the trigger should be activated on positive (1) or negative (0) slope.

TrigDRN: Disturbance report may trig for binary input N (*Enabled*) or not (*Disabled*).

TrigLevelN: Trig on positive (*Trig on 1*) or negative (*Trig on 0*) slope for binary input N.

Func103N: Function type number (0-255) for binary input N according to IEC-60870-5-103, that is, 128: Distance protection, 160: overcurrent protection, 176: transformer differential protection and 192: line differential protection.

Info103N: Information number (0-255) for binary input N according to IEC-60870-5-103, that is, 69-71: Trip L1-L3, 78-83: Zone 1-6.

See also description in the chapter IEC 60870-5-103.

16.6.3.3 Analog input signals

Up to 40 analog signals can be selected among internal analog and analog input signals. PCM600 is used to configure the signals.

For retrieving remote data from LDCM module, the Disturbance report function should not be connected to a 3 ms SMAI function block if this is the only intended use for the remote data.

The analog trigger of Disturbance report is not affected if analog input M is to be included in the disturbance recording or not (*OperationM = Enabled*/*Disabled*).

If *OperationM = Disabled*, no waveform (samples) will be recorded and reported in graph. However, Trip value, pre-fault and fault value will be recorded and reported. The input channel can still be used to trig the disturbance recorder.

If *OperationM = Enabled*, waveform (samples) will also be recorded and reported in graph.

NomValueM: Nominal value for input M.

OverTrigOpM, *UnderTrigOpM*: Over or Under trig operation, Disturbance report may trig for high/low level of analog input M (*Enabled*) or not (*Disabled*).

OverTrigLeM, *UnderTrigLeM*: Over or under trig level, Trig high/low level relative nominal value for analog input M in percent of nominal value.

16.6.3.4 Sub-function parameters

All functions are in operation as long as Disturbance report is in operation.

Indications

IndicationMaN: Indication mask for binary input N. If set (*Show*), a status change of that particular input, will be fetched and shown in the disturbance summary on local HMI. If not set (*Hide*), status change will not be indicated.

SetLEDN: Set red LED on local HMI in front of the IED if binary input N changes status.

Disturbance recorder

OperationM: Analog channel M is to be recorded by the disturbance recorder (*Enabled*) or not (*Disabled*).

If *OperationM = Disabled*, no waveform (samples) will be recorded and reported in graph. However, Trip value, pre-fault and fault value will be recorded and reported. The input channel can still be used to trig the disturbance recorder.

If *OperationM = Enabled*, waveform (samples) will also be recorded and reported in graph.

Event recorder

Event recorder (ER) function has no dedicated parameters.

Trip value recorder

ZeroAngleRef: The parameter defines which analog signal that will be used as phase angle reference for all other analog input signals. This signal will also be used for frequency measurement and the measured frequency is used when calculating trip values. It is suggested to point out a sampled voltage input signal, for example, a line or busbar phase voltage (channel 1-30).

Sequential of events

function has no dedicated parameters.

16.6.3.5 Consideration

The density of recording equipment in power systems is increasing, since the number of modern IEDs, where recorders are included, is increasing. This leads to a vast number of recordings at every single disturbance and a lot of information has to be handled if the recording functions do not have proper settings. The goal is to optimize the settings in each IED to be able to capture just valuable disturbances and to maximize the number that is possible to save in the IED.

The recording time should not be longer than necessary (*PostFaultrecT* and *TimeLimit*).

- Should the function record faults only for the protected object or cover more?
- How long is the longest expected fault clearing time?
- Is it necessary to include reclosure in the recording or should a persistent fault generate a second recording (*PostRetrig*)?

Minimize the number of recordings:

- Binary signals: Use only relevant signals to start the recording that is, protection trip, carrier receive and/or pickup signals.
- Analog signals: The level triggering should be used with great care, since unfortunate settings will cause enormously number of recordings. If nevertheless analog input

triggering is used, chose settings by a sufficient margin from normal operation values. Phase voltages are not recommended for trigging.

Remember that values of parameters set elsewhere are linked to the information on a report. Such parameters are, for example, station and object identifiers, CT and VT ratios.

16.7 Logical signal status report BINSTATREP

16.7.1 Identification

Function description	IEC 61850 identification	IEC 60617 identification	ANSI/IEEE C37.2 device number
Logical signal status report	BINSTATREP	-	-

16.7.2 Application

The Logical signal status report (BINSTATREP) function makes it possible for a SPA master to poll signals from various other function blocks.

BINSTATREP has 16 inputs and 16 outputs. The output status follows the inputs and can be read from the local HMI or via SPA communication.

When an input is set, the respective output is set for a user defined time. If the input signal remains set for a longer period, the output will remain set until the input signal resets.

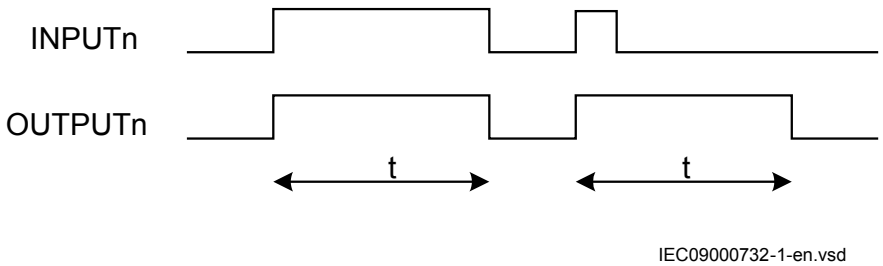

Figure 190: BINSTATREP logical diagram

16.7.3 Setting guidelines

The pulse time *t* is the only setting for the Logical signal status report (BINSTATREP). Each output can be set or reset individually, but the pulse time will be the same for all outputs in the entire BINSTATREP function.

16.8 Fault locator LMBRFLO

16.8.1 Identification

Function description	IEC 61850 identification	IEC 60617 identification	ANSI/IEEE C37.2 device number
Fault locator	LMBRFLO	-	-

16.8.2 Application

The main objective of line protection and monitoring IEDs is fast, selective and reliable operation for faults on a protected line section. Besides this, information on distance to fault is very important for those involved in operation and maintenance. Reliable information on the fault location greatly decreases the downtime of the protected lines and increases the total availability of a power system.

The fault locator is started with the input CALCDIST to which trip signals indicating in-line faults are connected, typically distance protection zone 1 and accelerating zone or the line differential protection. The disturbance report must also be started for the same faults since the function uses pre- and post-fault information from the trip value recorder function (TVR).

Beside this information the function must be informed about faulted phases for correct loop selection (phase selective outputs from differential protection, distance protection, directional OC protection, and so on). The following loops are used for different types of faults:

- for 3 phase faults: loop A-B.
- for 2 phase faults: the loop between the faulted phases.
- for 2 phase-to-ground faults: the loop between the faulted phases.
- for phase-to-ground faults: the phase-to-ground loop.

LMBRFLO function indicates the distance to fault as a percentage of the line length, in kilometers or miles as selected on the local HMI. *LineLengthUnit* setting is used to select the unit of length either, in *kilometer* or *miles* for the distance to fault. The distance to the fault, which is calculated with a high accuracy, is stored together with the recorded

disturbances. This information can be read on the local HMI, uploaded to PCM600 and is available on the station bus according to IEC 61850–8–1.

The distance to fault can be recalculated on the local HMI by using the measuring algorithm for different fault loops or for changed system parameters.

16.8.3 Setting guidelines

The parameters for the Fault locator function are set via the local HMI or PCM600.

The Fault locator algorithm uses phase voltages, phase currents and residual current in observed bay (protected line) and residual current from a parallel bay (line, which is mutual coupled to protected line).

The Fault locator has close connection to the Disturbance report function. All external analog inputs (channel 1-30), connected to the Disturbance report function, are available to the Fault locator and the function uses information calculated by the Trip value recorder. After allocation of analog inputs to the Disturbance report function, the user has to point out which analog inputs to be used by the Fault locator. According to the default settings the first four analog inputs are currents and next three are voltages in the observed bay (no parallel line expected since chosen input is set to zero). Use the Parameter Setting tool within PCM600 for changing analog configuration.

The list of parameters explains the meaning of the abbreviations. Figure 191 also presents these system parameters graphically. Note, that all impedance values relate to their primary values and to the total length of the protected line.

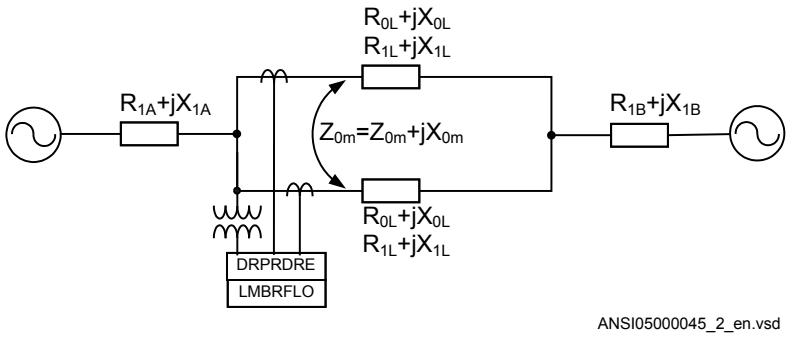

Figure 191: Simplified network configuration with network data, required for settings of the fault location-measuring function

For a single-circuit line (no parallel line), the figures for mutual zero-sequence impedance (X_{0M}, R_{0M}) and analog input are set at zero.

Power system specific parameter settings shown in table 2 are not general settings but specific setting included in the setting groups, that is, this makes it possible to change conditions for the Fault locator with short notice by changing setting group.

The source impedance is not constant in the network. However, this has a minor influence on the accuracy of the distance-to-fault calculation, because only the phase angle of the distribution factor has an influence on the accuracy. The phase angle of the distribution factor is normally very low and practically constant, because the positive sequence line impedance, which has an angle close to 90°, dominates it. Always set the source impedance resistance to values other than zero. If the actual values are not known, the values that correspond to the source impedance characteristic angle of 85° give satisfactory results.

16.8.3.1 Connection of analog currents

Connection diagram for analog currents included IN from parallel line shown in figure 192

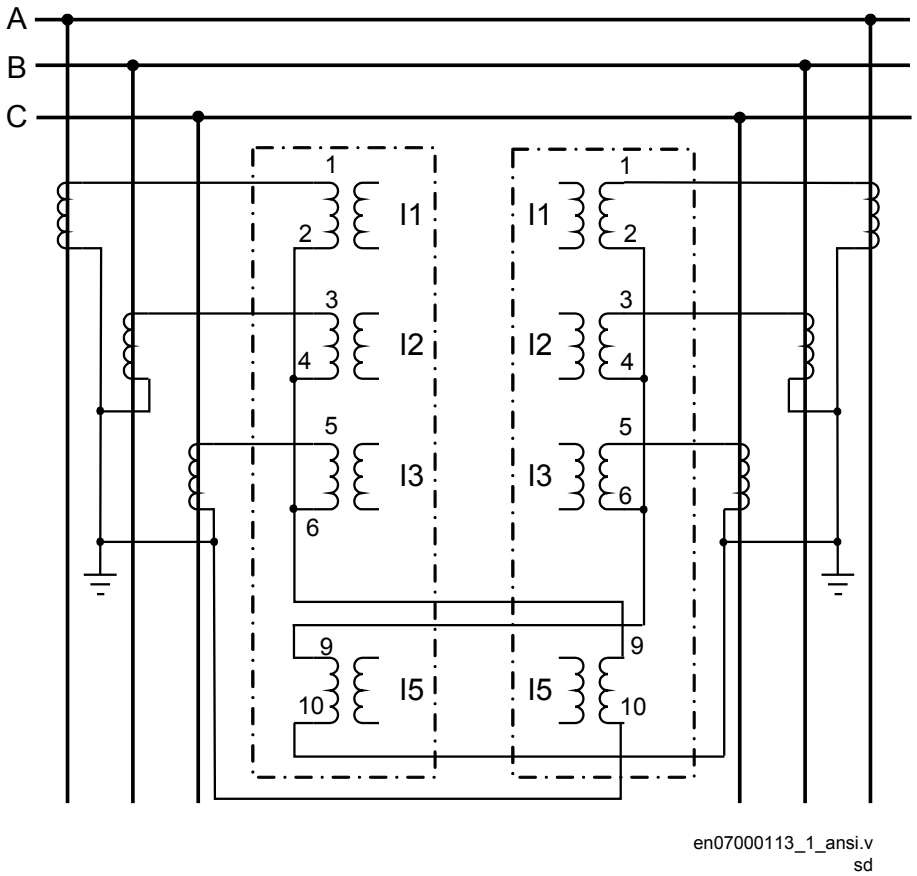

Figure 192: Example of connection of parallel line IN for Fault locator LMBRFLO

16.9 Limit counter L4UFCNT

16.9.1 Identification

Function description	IEC 61850 identification	IEC 60617 identification	ANSI/IEEE C37.2 device number
Limit counter	L4UFCNT		-

16.9.2 Application

Limit counter (L4UFCNT) is intended for applications where positive and/or negative sides on a binary signal need to be counted.

The limit counter provides four independent limits to be checked against the accumulated counted value. The four limit reach indication outputs can be utilized to initiate proceeding actions. The output indicators remain high until the reset of the function.

It is also possible to initiate the counter from a non-zero value by resetting the function to the wanted initial value provided as a setting.

If applicable, the counter can be set to stop or rollover to zero and continue counting after reaching the maximum count value. The steady overflow output flag indicates the next count after reaching the maximum count value. It is also possible to set the counter to rollover and indicate the overflow as a pulse, which lasts up to the first count after rolling over to zero. In this case, periodic pulses will be generated at multiple overflow of the function.

16.9.2.1 Setting guidelines

The parameters for Limit counter L4UFCNT are set via the local HMI or PCM600.

Section 17 Metering

17.1 Pulse-counter logic PCFCNT

17.1.1 Identification

Function description	IEC 61850 identification	IEC 60617 identification	ANSI/IEEE C37.2 device number
Pulse-counter logic	PCFCNT	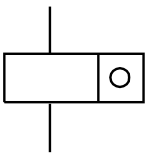	-

17.1.2 Application

Pulse-counter logic (PCFCNT) function counts externally generated binary pulses, for instance pulses coming from an external energy meter, for calculation of energy consumption values. The pulses are captured by the binary input module (BIM), and read by the PCFCNT function. The number of pulses in the counter is then reported via the station bus to the substation automation system or read via the station monitoring system as a service value. When using IEC 61850–8–1, a scaled service value is available over the station bus.

The normal use for this function is the counting of energy pulses from external energy meters. An optional number of inputs from an arbitrary input module in IED can be used for this purpose with a frequency of up to 40 Hz. The pulse-counter logic PCFCNT can also be used as a general purpose counter.

17.1.3 Setting guidelines

From PCM600, these parameters can be set individually for each pulse counter:

- *Operation*: *Disabled*/*Enabled*
- *tReporting*: *0-3600s*
- *EventMask*: *NoEvents*/*ReportEvents*

The configuration of the inputs and outputs of the pulse counter-logic PCFCNT function block is made with PCM600.

On the Binary Input Module, the debounce filter time is fixed to 5 ms, that is, the counter suppresses pulses with a pulse length less than 5 ms. The input oscillation blocking frequency is preset to 40 Hz. That means that the counter finds the input oscillating if the input frequency is greater than 40 Hz. The oscillation suppression is released at 30 Hz. The values for blocking/release of the oscillation can be changed in the local HMI and PCM600 under **Main menu/Settings/General settings/I/O-modules**.

The debounce time should be set to the same value for all channels on the board.

The setting is common for all input channels on a Binary Input Module, that is, if changes of the limits are made for inputs not connected to the pulse counter, the setting also influences the inputs on the same board used for pulse counting.

17.2 Function for energy calculation and demand handling ETPMMTR

17.2.1 Identification

Function description	IEC 61850 identification	IEC 60617 identification	ANSI/IEEE C37.2 device number
Function for energy calculation and demand handling	ETPMMTR	W_Varh	-

17.2.2 Application

Energy calculation and demand handling function (ETPMMTR) is intended for statistics of the forward and reverse active and reactive energy. It has a high accuracy basically given by the measurements function (CVMMXN). This function has a site calibration possibility to further increase the total accuracy.

The function is connected to the instantaneous outputs of (CVMMXN) as shown in figure 193.

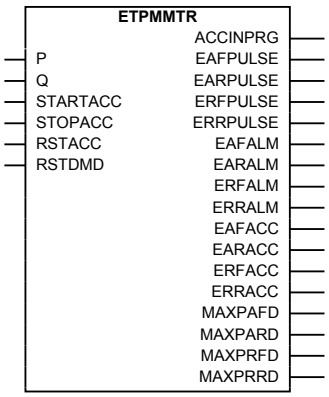

Figure 193: Connection of energy calculation and demand handling function ETPMMTR to the measurements function (CVMMXN)

The energy values can be read through communication in MWh and MVArh in monitoring tool of PCM600 and/or alternatively the values can be presented on the local HMI. The local HMI graphical display is configured with PCM600 Graphical Display Editor tool (GDE) with a measuring value which is selected to the active and reactive component as preferred. Also all Accumulated Active Forward, Active Reverse, Reactive Forward and Reactive Reverse energy values can be presented.

Maximum demand values are presented in MWh or MVArh in the same way.

Alternatively, the energy values can be presented with use of the pulse counters function (PCGGIO). The output energy values are scaled with the pulse output setting values *EAFAccPlsQty*, *EARAccPlsQty*, *ERFAccPlsQty* and *ERVAccPlsQty* of the energy metering function and then the pulse counter can be set-up to present the correct values by scaling in this function. Pulse counter values can then be presented on the local HMI in the same way and/or sent to the SA (Substation Automation) system through communication where the total energy then is calculated by summation of the energy pulses. This principle is good for very high values of energy as the saturation of numbers else will limit energy integration to about one year with 50 kV and 3000 A. After that the accumulation will start on zero again.

17.2.3 Setting guidelines

The parameters are set via the local HMI or PCM600.

The following settings can be done for the energy calculation and demand handling function ETPMMTR:

GlobalBaseSel: Selects the global base value group used by the function to define (*IBase*), (*VBase*) and (*SBase*).

Operation: *Disabled*/*Enabled*

EnaAcc: *Disabled*/*Enabled* is used to switch the accumulation of energy on and off.

tEnergy: Time interval when energy is measured.

tEnergyOnPls: gives the pulse length ON time of the pulse. It should be at least *100* ms when connected to the Pulse counter function block. Typical value can be *100* ms.

tEnergyOffPls: gives the OFF time between pulses. Typical value can be *100* ms.

EAFAccPlsQty and *EARAccPlsQty*: gives the MWh value in each pulse. It should be selected together with the setting of the Pulse counter (PCGGIO) settings to give the correct total pulse value.

ERFAccPlsQty and *ERVAccPlsQty* : gives the MVArh value in each pulse. It should be selected together with the setting of the Pulse counter (PCGGIO) settings to give the correct total pulse value.

For the advanced user there are a number of settings for direction, zero clamping, max limit, and so on. Normally, the default values are suitable for these parameters.

Section 18 Station communication

18.1 670 series protocols

Each IED is provided with a communication interface, enabling it to connect to one or many substation level systems or equipment, either on the Substation Automation (SA) bus or Substation Monitoring (SM) bus.

Following communication protocols are available:

- IEC 61850-8-1 communication protocol
- LON communication protocol
- SPA or IEC 60870-5-103 communication protocol
- DNP3.0 communication protocol

Theoretically, several protocols can be combined in the same IED.

18.2 IEC 61850-8-1 communication protocol

18.2.1 Application IEC 61850-8-1

IEC 61850-8-1 communication protocol allows vertical communication to HSI clients and allows horizontal communication between two or more intelligent electronic devices (IEDs) from one or several vendors to exchange information and to use it in the performance of their functions and for correct co-operation.

GOOSE (Generic Object Oriented Substation Event), which is a part of IEC 61850–8–1 standard, allows the IEDs to communicate state and control information amongst themselves, using a publish-subscribe mechanism. That is, upon detecting an event, the IED(s) use a multi-cast transmission to notify those devices that have registered to receive the data. An IED can, by publishing a GOOSE message, report its status. It can also request a control action to be directed at any device in the network.

Figure 194 shows the topology of an IEC 61850–8–1 configuration. IEC 61850–8–1 specifies only the interface to the substation LAN. The LAN itself is left to the system integrator.

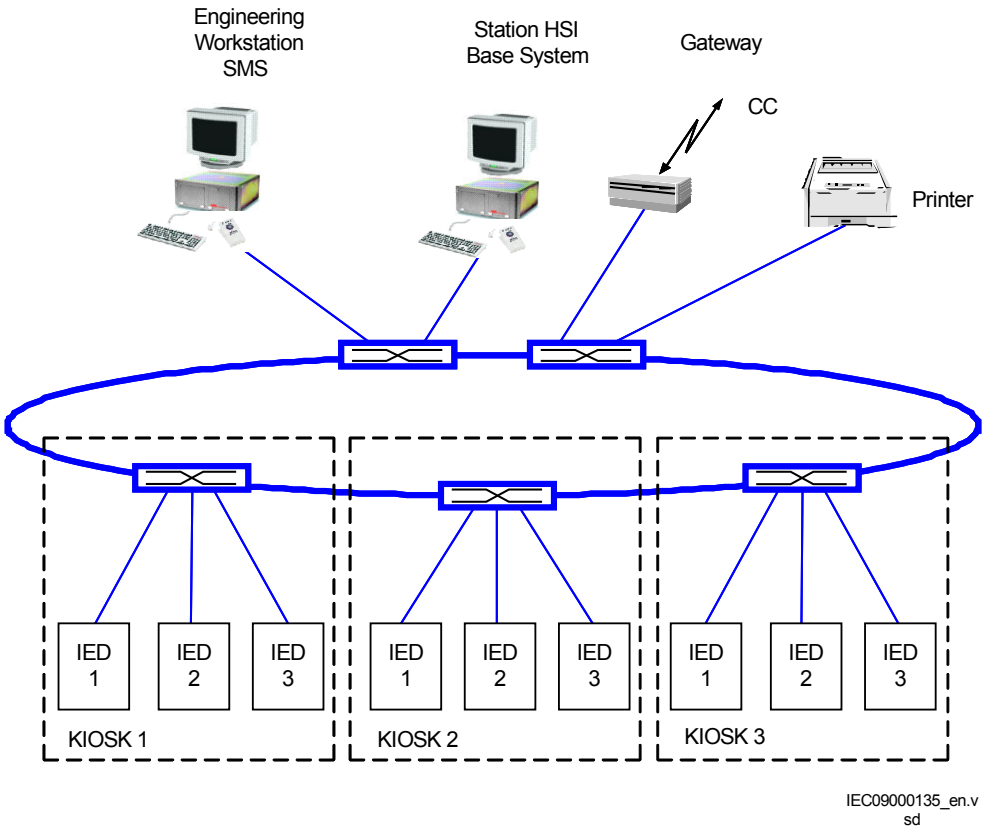

Figure 194: SA system with IEC 61850–8–1

Figure 195 shows the GOOSE peer-to-peer communication.

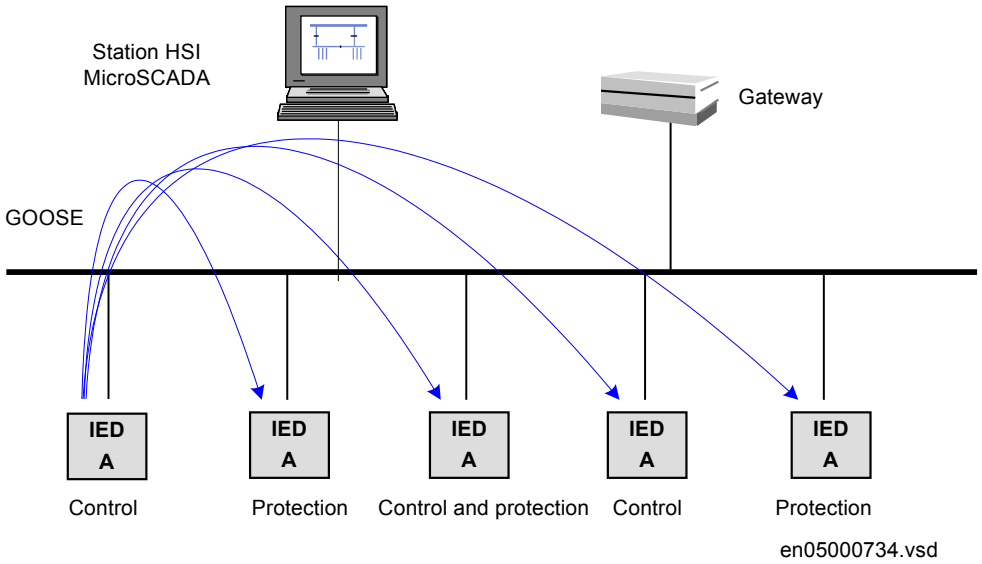

Figure 195: Example of a broadcasted GOOSE message

18.2.2 Horizontal communication via GOOSE for interlocking GOOSEINTLKRCV

Table 41: GOOSEINTLKRCV Non group settings (basic)

Name	Values (Range)	Unit	Step	Default	Description
Operation	Disabled Enabled	-	-	Disabled	Operation Disabled/Enabled

18.2.3 Setting guidelines

There are two settings related to the IEC 61850–8–1 protocol:

Operation User can set IEC 61850 communication to *Enabled* or *Disabled*.

GOOSE has to be set to the Ethernet link where GOOSE traffic shall be send and received.

18.2.4 Generic communication function for Single Point indication SPGAPC, SP16GAPC

18.2.4.1 Application

Generic communication function for Measured Value (SPGAPC) function is used to send one single logical output to other systems or equipment in the substation. It has one visible input, that should be connected in ACT tool.

18.2.4.2 Setting guidelines

There are no settings available for the user for SPGAPC. However, PCM600 must be used to get the signals sent by SPGAPC.

18.2.5 Generic communication function for Measured Value MVGAPC

18.2.5.1 Application

Generic communication function for Measured Value MVGAPC function is used to send the instantaneous value of an analog signal to other systems or equipment in the substation. It can also be used inside the same IED, to attach a RANGE aspect to an analog value and to permit measurement supervision on that value.

18.2.5.2 Setting guidelines

The settings available for Generic communication function for Measured Value (MVGAPC) function allows the user to choose a deadband and a zero deadband for the monitored signal. Values within the zero deadband are considered as zero.

The high and low limit settings provides limits for the high-high-, high, normal, low and low-low ranges of the measured value. The actual range of the measured value is shown on the range output of MVGAPC function block. When a Measured value expander block (RANGE_XP) is connected to the range output, the logical outputs of the RANGE_XP are changed accordingly.

18.2.6 IEC 61850-8-1 redundant station bus communication

18.2.6.1 Identification

Function description	LHMI identification	IEC 61850 identification	IEC 60617 identification	ANSI/IEEE C37.2 device number
Parallel Redundancy Protocol Status	PRPSTATUS	RCHLCCH	-	-
Duo driver configuration	PRP	-	-	-

18.2.6.2 Application

Parallel redundancy protocol status (PRPSTATUS) together with Duo driver configuration (DUODRV) are used to supervise and assure redundant Ethernet communication over two channels. This will secure data transfer even though one communication channel might not be available for some reason. Together PRPSTATUS and DUODRV provide redundant communication over station bus running IEC 61850-8-1 protocol. The redundant communication use both port AB and CD on OEM module.

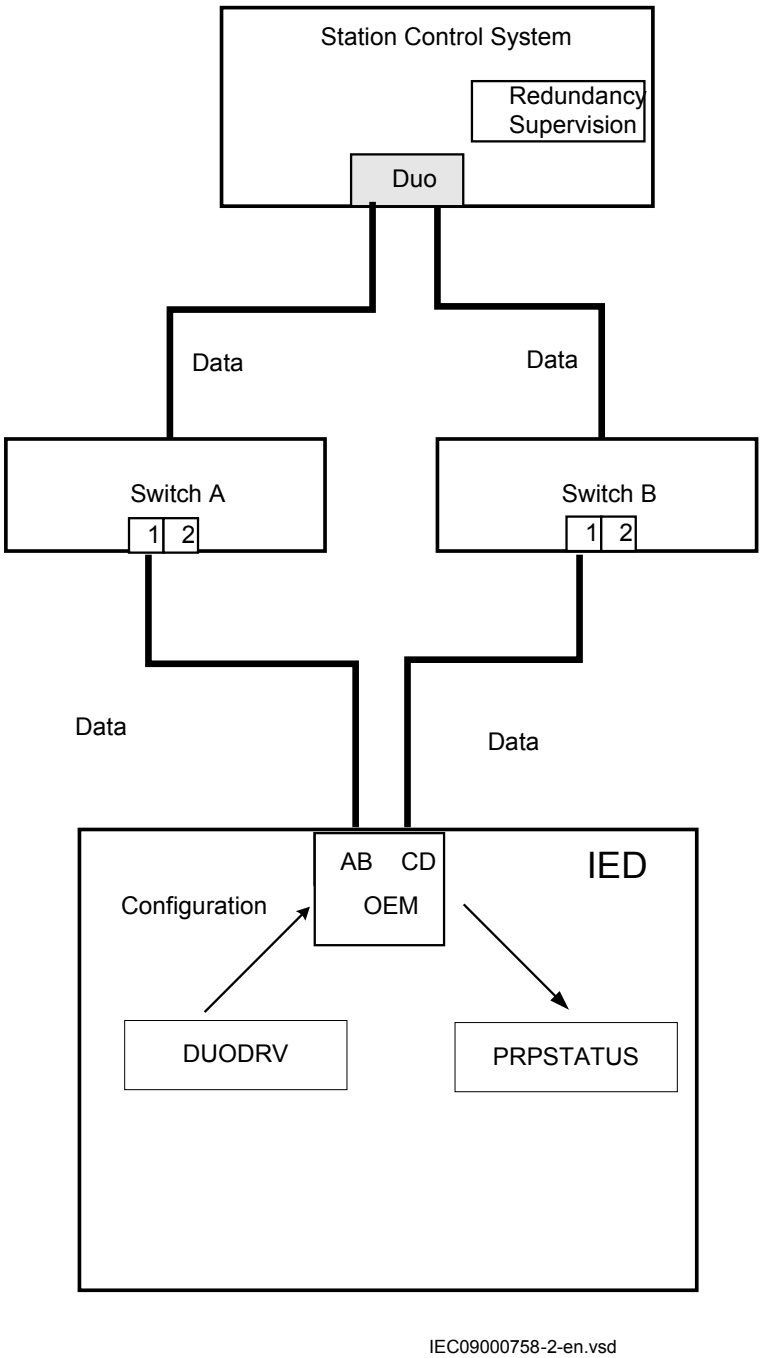

Figure 196: Redundant station bus

18.2.6.3 Setting guidelines

Redundant communication (DUODRV) is configured in the local HMI under **Main menu/Settings/General settings/Communication/Ethernet configuration/Rear OEM - Redundant PRP**

The settings can then be viewed, but not set, in the Parameter Setting tool in PCM600 under **Main menu/IED Configuration/Communication/Ethernet configuration/ DUODRV**:

Operation: The redundant communication will be activated when this parameter is set to *On.*After confirmation the IED will restart and the setting alternatives *Rear OEM - Port AB* and *CD* will not be further displayed in the local HMI. The *ETHLANAB* and *ETHLANCD* in the Parameter Setting Tool are irrelevant when the redundant communication is activated, only DUODRV IPAdress and IPMask are valid.

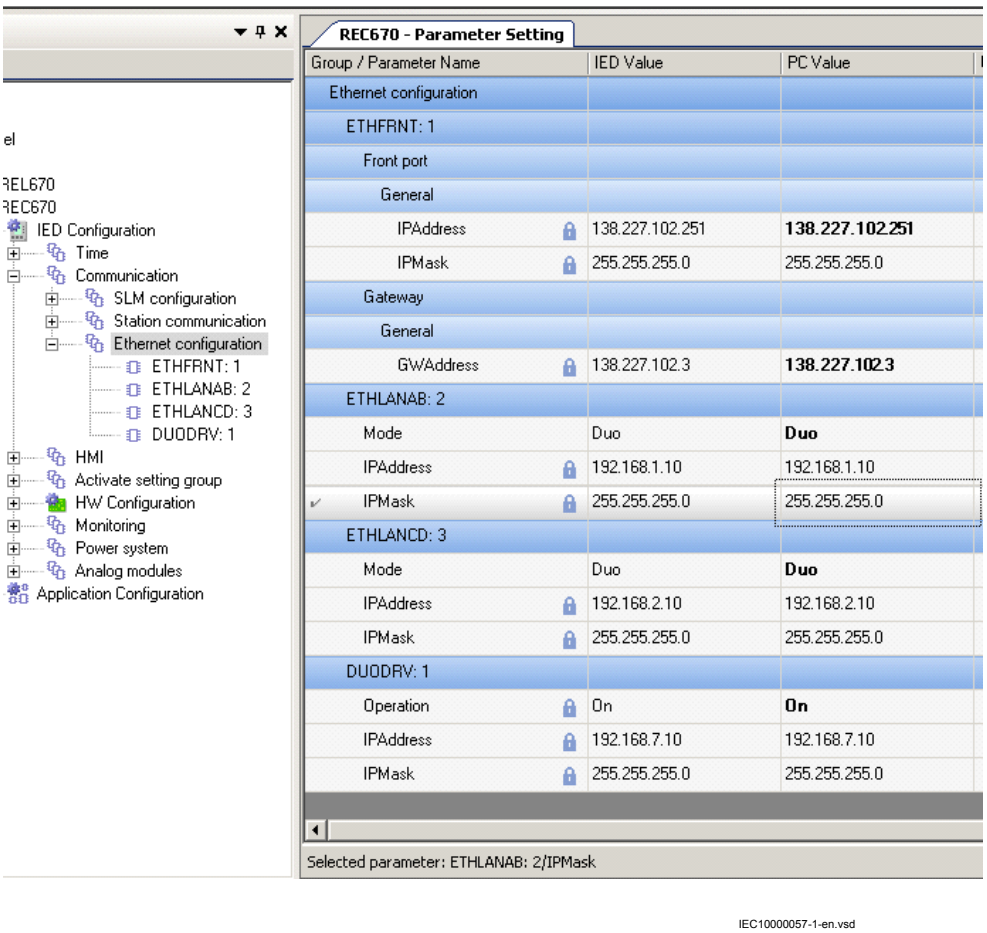

Figure 197: PST screen: DUODRV Operation is set to On, which affect Rear OEM - Port AB and CD which are both set to Duo

18.3 LON communication protocol

18.3.1 Application

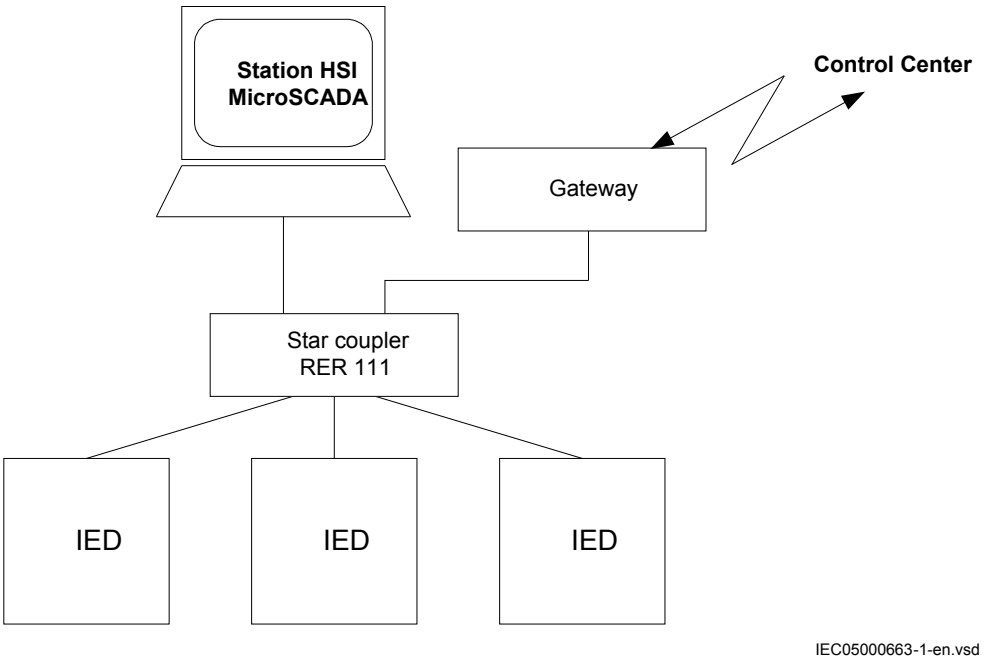

Figure 198: Example of LON communication structure for a substation automation system

An optical network can be used within the substation automation system. This enables communication with the IEDs in the 670 series through the LON bus from the operator's workplace, from the control center and also from other IEDs via bay-to-bay horizontal communication.

The fibre optic LON bus is implemented using either glass core or plastic core fibre optic cables.

Table 42: Specification of the fibre optic connectors

	Glass fibre	Plastic fibre
Cable connector	ST-connector	snap-in connector
Cable diameter	62.5/125 m	1 mm
Max. cable length	1000 m	10 m
Wavelength	820-900 nm	660 nm
Transmitted power	-13 dBm (HFBR-1414)	-13 dBm (HFBR-1521)
Receiver sensitivity	-24 dBm (HFBR-2412)	-20 dBm (HFBR-2521)

The LON Protocol

The LON protocol is specified in the LonTalkProtocol Specification Version 3 from Echelon Corporation. This protocol is designed for communication in control networks and is a peer-to-peer protocol where all the devices connected to the network can communicate with each other directly. For more information of the bay-to-bay communication, refer to the section Multiple command function.

Hardware and software modules

The hardware needed for applying LON communication depends on the application, but one very central unit needed is the LON Star Coupler and optical fibres connecting the star coupler to the IEDs. To interface the IEDs from MicroSCADA, the application library LIB670 is required.

The HV Control 670 software module is included in the LIB520 high-voltage process package, which is a part of the Application Software Library within MicroSCADA applications.

The HV Control 670 software module is used for control functions in IEDs in the 670 series. This module contains the process picture, dialogues and a tool to generate the process database for the control application in MicroSCADA.

Use the LON Network Tool (LNT) to set the LON communication. This is a software tool applied as one node on the LON bus. To communicate via LON, the IEDs need to know

- The node addresses of the other connected IEDs.
- The network variable selectors to be used.

This is organized by LNT.

The node address is transferred to LNT via the local HMI by setting the parameter *ServicePinMsg* = *Yes*. The node address is sent to LNT via the LON bus, or LNT can scan the network for new nodes.

The communication speed of the LON bus is set to the default of 1.25 Mbit/s. This can be changed by LNT.

18.4 SPA communication protocol

18.4.1 Application

SPA communication protocol as an alternative to IEC 60870-5-103. The same communication port as for IEC 60870-5-103 is used.

When communicating with a PC connected to the utility substation LAN, via WAN and the utility office LAN, as shown in figure 199, and using the rear Ethernet port on the optical Ethernet module (OEM), the only hardware required for a station monitoring system is:

- Optical fibres from the IED to the utility substation LAN.
- PC connected to the utility office LAN.

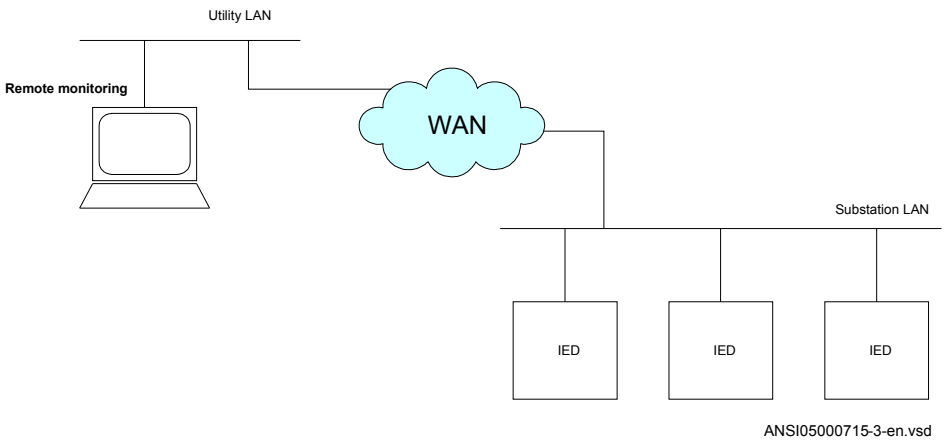

Figure 199: SPA communication structure for a remote monitoring system via a substation LAN, WAN and utility LAN

The SPA communication is mainly used for the Station Monitoring System. It can include different IEDs with remote communication possibilities. Connection to a computer (PC) can be made directly (if the PC is located in the substation) or by telephone modem through a telephone network with ITU (former CCITT) characteristics or via a LAN/WAN connection.

glass	<1000 m according to optical budget
plastic	<20 m (inside cubicle) according to optical budget

Functionality

The SPA protocol V2.5 is an ASCII-based protocol for serial communication. The communication is based on a master-slave principle, where the IED is a slave and the PC is the master. Only one master can be applied on each fibre optic loop. A program is required in the master computer for interpretation of the SPA-bus codes and for translation of the data that should be sent to the IED.

For the specification of the SPA protocol V2.5, refer to SPA-bus Communication Protocol V2.5.

18.4.2 Setting guidelines

The setting parameters for the SPA communication are set via the local HMI.

SPA, IEC 60870-5-103 and DNP3 uses the same rear communication port. Set the parameter *Operation*, under **Main menu /Settings /General settings / Communication /SLM configuration /Rear optical SPA-IEC-DNP port /Protocol selection to the selected protocol**.

When the communication protocols have been selected, the IED is automatically restarted.

The most important settings in the IED for SPA communication are the slave number and baud rate (communication speed). These settings are absolutely essential for all communication contact to the IED.

These settings can only be done on the local HMI for rear channel communication and for front channel communication.

The slave number can be set to any value from 1 to 899, as long as the slave number is unique within the used SPA loop.

The baud rate, which is the communication speed, can be set to between 300 and 38400 baud. Refer to technical data to determine the rated communication speed for the selected communication interfaces. The baud rate should be the same for the whole station, although different baud rates in a loop are possible. If different baud rates in the same fibre optical loop or RS485 network are used, consider this when making the communication setup in the communication master, the PC.

For local fibre optic communication, 19200 or 38400 baud is the normal setting. If telephone communication is used, the communication speed depends on the quality of the connection and on the type of modem used. But remember that the IED does not adapt its speed to the actual communication conditions, because the speed is set on the local HMI.

18.5 IEC 60870-5-103 communication protocol

18.5.1 Application

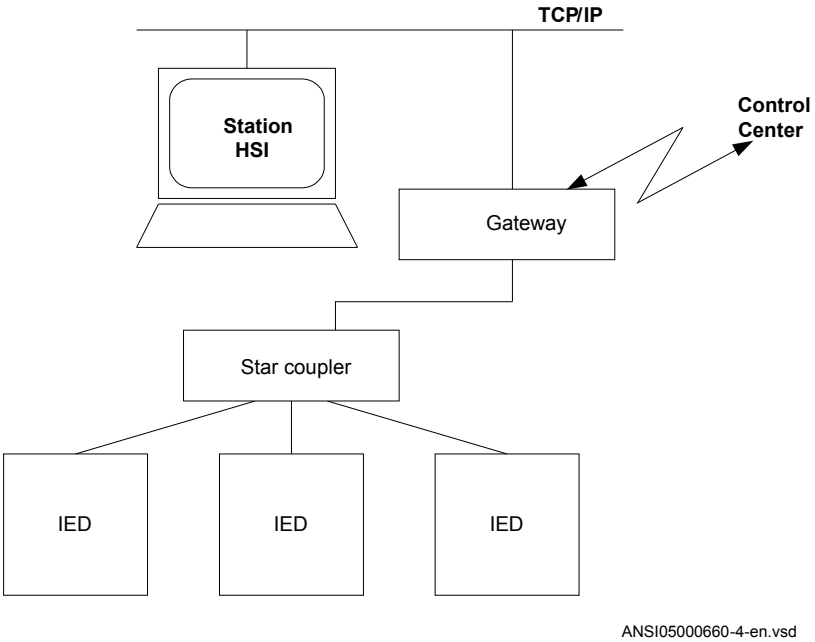

Figure 200: Example of IEC 60870-5-103 communication structure for a substation automation system

IEC 60870-5-103 communication protocol is mainly used when a protection IED communicates with a third party control or monitoring system. This system must have software that can interpret the IEC 60870-5-103 communication messages.

When communicating locally in the station using a Personal Computer (PC) or a Remote Terminal Unit (RTU) connected to the Communication and processing module, the only hardware needed is optical fibres and an opto/electrical converter for the PC/RTU, or a RS-485 connection depending on the used IED communication interface.

Functionality

IEC 60870-5-103 is an unbalanced (master-slave) protocol for coded-bit serial communication exchanging information with a control system. In IEC terminology a primary station is a master and a secondary station is a slave. The communication is based on a point-to-point principle. The master must have software that can interpret the IEC 60870-5-103 communication messages. For detailed information about IEC 60870-5-103, refer to IEC60870 standard part 5: Transmission protocols, and to the section 103, Companion standard for the informative interface of protection equipment.

Design

General

The protocol implementation consists of the following functions:

- Event handling
- Report of analog service values (measurands)
- Fault location
- Command handling
  - Autorecloser ON/OFF
  - Teleprotection ON/OFF
  - Protection ON/OFF
  - LED reset
  - Characteristics 1 - 4 (Setting groups)
- File transfer (disturbance files)
- Time synchronization

Hardware

When communicating locally with a Personal Computer (PC) or a Remote Terminal Unit (RTU) in the station, using the SPA/IEC port, the only hardware needed is:· Optical fibres, glass/plastic· Opto/electrical converter for the PC/RTU· PC/RTU

Commands

The commands defined in the IEC 60870-5-103 protocol are represented in a dedicated function blocks. These blocks have output signals for all available commands according to the protocol.

- IED commands in control direction

Function block with defined IED functions in control direction, I103IEDCMD. This block use PARAMETR as FUNCTION TYPE, and INFORMATION NUMBER parameter is defined for each output signal.

- Function commands in control direction

Function block with pre defined functions in control direction, I103CMD. This block includes the FUNCTION TYPE parameter, and the INFORMATION NUMBER parameter is defined for each output signal.

- Function commands in control direction

Function block with user defined functions in control direction, I103UserCMD. These function blocks include the FUNCTION TYPE parameter for each block in the private range, and the INFORMATION NUMBER parameter for each output signal.

Status

The events created in the IED available for the IEC 60870-5-103 protocol are based on the:

- IED status indication in monitor direction

Function block with defined IED functions in monitor direction, I103IED. This block use PARAMETER as FUNCTION TYPE, and INFORMATION NUMBER parameter is defined for each input signal.

- Function status indication in monitor direction, user-defined

Function blocks with user defined input signals in monitor direction, I103UserDef. These function blocks include the FUNCTION TYPE parameter for each block in the private range, and the INFORMATION NUMBER parameter for each input signal.

- Supervision indications in monitor direction

Function block with defined functions for supervision indications in monitor direction, I103Superv. This block includes the FUNCTION TYPE parameter, and the INFORMATION NUMBER parameter is defined for each output signal.

- Ground fault indications in monitor direction

Function block with defined functions for ground fault indications in monitor direction, I103EF. This block includes the FUNCTION TYPE parameter, and the INFORMATION NUMBER parameter is defined for each output signal.

- Fault indications in monitor direction, type 1

Function block with defined functions for fault indications in monitor direction, I103FltDis. This block includes the FUNCTION TYPE parameter, and the INFORMATION NUMBER parameter is defined for each input signal. This block is suitable for distance protection function.

- Fault indications in monitor direction, type 2

Function block with defined functions for fault indications in monitor direction, I103FltStd. This block includes the FUNCTION TYPE parameter, and the INFORMATION NUMBER parameter is defined for each input signal.

This block is suitable for line differential, transformer differential, over-current and ground-fault protection functions.

- Autorecloser indications in monitor direction

Function block with defined functions for autorecloser indications in monitor direction, I103AR. This block includes the FUNCTION TYPE parameter, and the INFORMATION NUMBER parameter is defined for each output signal.

Measurands

The measurands can be included as type 3.1, 3.2, 3.3, 3.4 and type 9 according to the standard.

- Measurands in public range

Function block that reports all valid measuring types depending on connected signals, I103Meas.

- Measurands in private range

Function blocks with user defined input measurands in monitor direction, I103MeasUsr. These function blocks include the FUNCTION TYPE parameter for each block in the private range, and the INFORMATION NUMBER parameter for each block.

Fault location

The fault location is expressed in reactive ohms. In relation to the line length in reactive ohms, it gives the distance to the fault in percent. The data is available and reported when the fault locator function is included in the IED.

Disturbance recordings

- The transfer functionality is based on the Disturbance recorder function. The analog and binary signals recorded will be reported to the master by polling. The eight last disturbances that are recorded are available for transfer to the master. A file that has been transferred and acknowledged by the master cannot be transferred again.
- The binary signals that are included in the disturbance recorder are those that are connected to the disturbance function blocks B1RBDR to B6RBDR. These function blocks include the function type and the information number for each signal. For more information on the description of the Disturbance report in the Technical reference manual. The analog channels, that are reported, are those connected to the disturbance function blocks A1RADR to A4RADR. The eight first ones belong to the public range and the remaining ones to the private range.

Settings

Settings for RS485 and optical serial communication

General settings

SPA, DNP and IEC 60870-5-103 can be configured to operate on the SLM optical serial port while DNP and IEC 60870-5-103 only can utilize the RS485 port. A single protocol can be active on a given physical port at any time.

Two different areas in the HMI are used to configure the IEC 60870-5-103 protocol.

1. The port specific IEC 60870-5-103 protocol parameters are configured under: **Main menu/Configuration/Communication/Station Communication/ IEC6870-5-103/**
   - <config-selector>
   - SlaveAddress
   - BaudRate
   - RevPolarity (optical channel only)
   - CycMeasRepTime
   - MasterTimeDomain
   - TimeSyncMode
   - EvalTimeAccuracy
   - EventRepMode
   - CmdMode

   <config-selector> is:
   - “OPTICAL103:1” for the optical serial channel on the SLM
   - “RS485103:1” for the RS485 port
2. The protocol to activate on a physical port is selected under: **Main menu/Configuration/Communication/Station Communication/Port configuration/**
   - RS485 port
     - RS485PROT:1 (off, DNP, IEC103)
   - SLM optical serial port
     - PROTOCOL:1 (off, DNP, IEC103, SPA)

Operation		Off			
SlaveAddress		1		1	254
BaudRate		9600 Bd			
RevPolarity		On			
CycMeasRepTime		5,0	s	1,0	1800,0
MasterTimeDomain		UTC			
TimeSyncMode		IEDTime			
EvalTimeAccuracy		5ms			
EventRepMode		SeqOfEvent			

Figure 201: Settings for IEC 60870-5-103 communication

The general settings for IEC 60870-5-103 communication are the following:

- *SlaveAddress* and *BaudRate*: Settings for slave number and communication speed (baud rate).
  The slave number can be set to any value between 1 and 254. The communication speed, can be set either to 9600 bits/s or 19200 bits/s.
- *RevPolarity*: Setting for inverting the light (or not). Standard IEC 60870-5-103 setting is *Enabled*.
- *CycMeasRepTime*: See I103MEAS function block for more information.
- *EventRepMode*: Defines the mode for how events are reported. The event buffer size is 1000 events.

Event reporting mode

If *SeqOfEvent* is selected, all GI and spontaneous events will be delivered in the order they were generated by BSW. The most recent value is the latest value delivered. All GI data from a single block will come from the same cycle.

If *HiPriSpont* is selected, spontaneous events will be delivered prior to GI event. To prevent old GI data from being delivered after a new spontaneous event, the pending GI event is modified to contain the same value as the spontaneous event. As a result, the GI dataset is not time-correlated.

The settings for communication parameters slave number and baud rate can be found on the local HMI under: **Main menu/Configuration/Communication /Station configuration /SPA/SPA:1** and then select a protocol.

Settings from PCM600

Event

For each input of the Event (EVENT) function there is a setting for the information number of the connected signal. The information number can be set to any value between 0 and 255. To get proper operation of the sequence of events the event masks in the event function is to be set to ON_CHANGE. For single-command signals, the event mask is to be set to ON_SET.

In addition there is a setting on each event block for function type. Refer to description of the Main Function type set on the local HMI.

Commands

As for the commands defined in the protocol there is a dedicated function block with eight output signals. Use PCM600 to configure these signals. To realize the BlockOfInformation command, which is operated from the local HMI, the output BLKINFO on the IEC command function block ICOM has to be connected to an input on an event function block. This input must have the information number 20 (monitor direction blocked) according to the standard.

Disturbance Recordings

For each input of the Disturbance recorder function there is a setting for the information number of the connected signal. The function type and the information number can be set to any value between 0 and 255. To get INF and FUN for the recorded binary signals there are parameters on the disturbance recorder for each input. The user must set these parameters to whatever he connects to the corresponding input.

Refer to description of Main Function type set on the local HMI.

Recorded analog channels are sent with ASDU26 and ASDU31. One information element in these ASDUs is called ACC and indicates the actual channel to be processed. The channels on disturbance recorder will be sent with an ACC according to the following table:

DRA#-Input	ACC	IEC103 meaning
1	1	IA
2	2	IB
3	3	IC
4	4	IG
5	5	VA
6	6	VB
7	7	VC
8	8	VG
9	64	Private range
10	65	Private range
11	66	Private range
12	67	Private range
13	68	Private range
14	69	Private range
15	70	Private range
16	71	Private range

Table continues on next page

DRA#-Input	ACC	IEC103 meaning
17	72	Private range
18	73	Private range
19	74	Private range
20	75	Private range
21	76	Private range
22	77	Private range
23	78	Private range
24	79	Private range
25	80	Private range
26	81	Private range
27	82	Private range
28	83	Private range
29	84	Private range
30	85	Private range
31	86	Private range
32	87	Private range
33	88	Private range
34	89	Private range
35	90	Private range
36	91	Private range
37	92	Private range
38	93	Private range
39	94	Private range
40	95	Private range

Function and information types

The function type is defined as follows:

128 = distance protection

160 = overcurrent protection

176 = transformer differential protection

192 = line differential protection

Refer to the tables in the Technical reference manual /Station communication, specifying the information types supported by the communication protocol IEC 60870-5-103.

To support the information, corresponding functions must be included in the protection IED.

There is no representation for the following parts:

- Generating events for test mode
- Cause of transmission: Info no 11, Local operation

EIA RS-485 is not supported. Glass or plastic fibre should be used. BFOC/2.5 is the recommended interface to use (BFOC/2.5 is the same as ST connectors). ST connectors are used with the optical power as specified in standard.

For more information, refer to IEC standard IEC 60870-5-103.

18.6 MULTICMDRCV and MULTICMDSND

18.6.1 Identification

Function description	IEC 61850 identification	IEC 60617 identification	ANSI/IEEE C37.2 device number
Multiple command and receive	MULTICMDRCV	-	-
Multiple command and send	MULTICMDSND	-	-

18.6.2 Application

The IED provides two function blocks enabling several IEDs to send and receive signals via the interbay bus. The sending function block, MULTICMDSND, takes 16 binary inputs. LON enables these to be transmitted to the equivalent receiving function block, MULTICMDRCV, which has 16 binary outputs.

18.6.3 Setting guidelines

18.6.3.1 Settings

The parameters for the multiple command function are set via PCM600.

The *Mode* setting sets the outputs to either a *Steady* or *Pulsed* mode.

Section 19 Remote communication

19.1 Binary signal transfer

19.1.1 Identification

Function description	IEC 61850 identification	IEC 60617 identification	ANSI/IEEE C37.2 device number
Binary signal transfer	BinSignReceive	-	-
Binary signal transfer	BinSignTransm	-	-

19.1.2 Application

The IEDs can be equipped with communication devices for line differential communication and/or communication of binary signals between IEDs. The same communication hardware is used for both purposes.

Communication between two IEDs geographically on different locations is a fundamental part of the line differential function.

Sending of binary signals between two IEDs, one in each end of a power line is used in teleprotection schemes and for direct transfer trips. In addition to this, there are application possibilities, for example, blocking/enabling functionality in the remote substation, changing setting group in the remote IED depending on the switching situation in the local substation and so on.

When equipped with a LDCM, a 64 kbit/s communication channel can be connected to the IED, which will then have the capacity of 192 binary signals to be communicated with a remote IED.

19.1.2.1 Communication hardware solutions

The LDCM (Line Data Communication Module) has an optical connection such that two IEDs can be connected over a direct fibre (multimode), as shown in figure 202. The protocol used is IEEE/ANSI C37.94. The distance with this solution is typical 110 km/68 miles.

Figure 202: Direct fibre optical connection between two IEDs with LDCM

The LDCM can also be used together with an external optical to galvanic G.703 converter or with an alternative external optical to galvanic X.21 converter as shown in figure 203. These solutions are aimed for connections to a multiplexer, which in turn is connected to a telecommunications transmission network (for example, SDH or PDH).

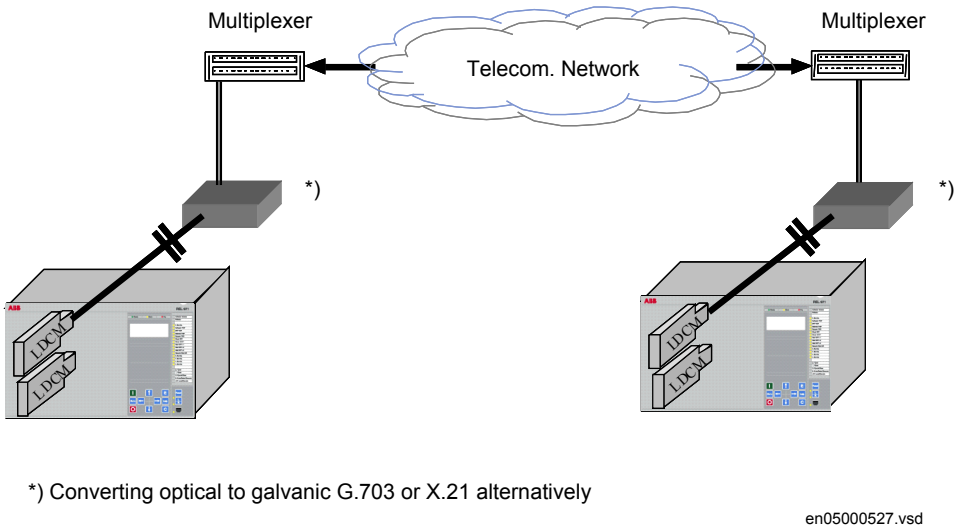

Figure 203: LDCM with an external optical to galvanic converter and a multiplexer

When an external modem G.703 or X21 is used, the connection between LDCM and the modem is made with a multimode fibre of max. 3 km/2 mile length. The IEEE/ANSI C37.94 protocol is always used between LDCM and the modem.

Alternatively, a LDCM with X.21 built-in converter and micro D-sub 15-pole connector output can be used.

19.1.3 Setting guidelines

ChannelMode: This parameter can be set *Enabled* or *Disabled*. Besides this, it can be set *OutOfService* which signifies that the local LDCM is out of service. Thus, with this setting, the communication channel is active and a message is sent to the remote IED that the local IED is out of service, but there is no COMFAIL signal and the analog and binary values are sent as zero.

TerminalNo: This setting shall be used to assign an unique address to each LDCM, in all current differential IEDs. Up to 256 LDCMs can be assigned a unique number. Consider a local IED with two LDCMs:

- LDCM for slot 302: Set *TerminalNo* to 1 and *RemoteTermNo* to 2
- LDCM for slot 303: Set *TerminalNo* to 3 and *RemoteTermNo* to 4

In multiterminal current differential applications, with 4 LDCMs in each IED, up to 20 unique addresses must be set.

The unique address is necessary to give high security against incorrect addressing in the communication system. Using the same number for setting *TerminalNo* in some of the LDCMs, a loop-back test in the communication system can give incorrect trip.

RemoteTermNo: This setting assigns a number to each related LDCM in the remote IED. For each LDCM, the parameter *RemoteTermNo* shall be set to a different value than parameter *TerminalNo*, but equal to the *TerminalNo* of the remote end LDCM. In the remote IED the *TerminalNo* and *RemoteTermNo* settings are reversed as follows:

- LDCM for slot 302: Set *TerminalNo* to 2 and *RemoteTermNo* to 1
- LDCM for slot 303: Set *TerminalNo* to 4 and *RemoteTermNo* to 3

The redundant channel is always configured in the lower position, for example

- Slot 302: Main channel
- Slot 303: Redundant channel

The same is applicable for slot 312-313 and slot 322-323.

DiffSync: Here the method of time synchronization, *Echo* or *GPS*, for the line differential function is selected.

GPSSyncErr: If GPS synchronization is lost, the synchronization of the line differential function will continue during 16 s. based on the stability in the local IED clocks. Thereafter the setting *Block* will block the line differential function or the setting *Echo* will make it continue by using the *Echo* synchronization method. It shall be noticed that using *Echo* in this situation is only safe as long as there is no risk of varying transmission asymmetry.

CommSync: This setting decides the *Master* or *Slave* relation in the communication system and shall not be mistaken for the synchronization of line differential current samples. When direct fibre is used, one LDCM is set as *Master* and the other one as *Slave*. When a modem and multiplexer is used, the IED is always set as *Slave*, as the telecommunication system will provide the clock master.

OptoPower: The setting *LowPower* is used for fibres 0 – 1 km (0.6 mile) and *HighPower* for fibres >1 km (>0.6 mile).

TransmCurr: This setting decides which of 2 possible local currents that shall be transmitted, or if and how the sum of 2 local currents shall be transmitted, or finally if the channel shall be used as a redundant channel.

In a breaker-and-a-half arrangement, there will be 2 local currents, and the grounding on the CTs can be different for these. *CT-SUM* will transmit the sum of the 2 CT groups. *CT-DIFF1* will transmit CT group 1 minus CT group 2 and *CT-DIFF2* will transmit CT group 2 minus CT group 1.

CT-GRP1 or *CT-GRP2* will transmit the respective CT group, and the setting *RedundantChannel* makes the channel be used as a backup channel.

ComFailAlrmDel: Time delay of communication failure alarm. In communication systems, route switching can sometimes cause interruptions with a duration up to 50 ms. Thus, a too short time delay setting might cause nuisance alarms in these situations.

ComFailResDel: Time delay of communication failure alarm reset.

RedChSwTime: Time delay before switchover to a redundant channel in case of primary channel failure.

RedChRturnTime: Time delay before switchback to a the primary channel after channel failure.

AsymDelay: The asymmetry is defined as transmission delay minus receive delay. If a fixed asymmetry is known, the *Echo* synchronization method can be used if the parameter *AsymDelay* is properly set. From the definition follows that the asymmetry will always be positive in one end, and negative in the other end.

AnalogLatency: Local analog latency; A parameter which specifies the time delay (number of samples) between actual sampling and the time the sample reaches the local

communication module, LDCM. The parameter shall be set to 2 when transmitting analog data from the local transformer module, TRM. .

RemAinLatency: Remote analog latency; This parameter corresponds to the *LocAinLatency* set in the remote IED.

MaxTransmDelay: Data for maximum 40 ms transmission delay can be buffered up. Delay times in the range of some ms are common. It shall be noticed that if data arrive in the wrong order, the oldest data will just be disregarded.

CompRange: The set value is the current peak value over which truncation will be made. To set this value, knowledge of the fault current levels should be known. The setting is not overly critical as it considers very high current values for which correct operation normally still can be achieved.

MaxtDiffLevel: Allowed maximum time difference between the internal clocks in respective line end.

Section 20 Basic IED functions

20.1 Authority status ATHSTAT

20.1.1 Application

Authority status (ATHSTAT) function is an indication function block, which informs about two events related to the IED and the user authorization:

- the fact that at least one user has tried to log on wrongly into the IED and it was blocked (the output USRBLKED)
- the fact that at least one user is logged on (the output LOGGEDON)

The two outputs of ATHSTAT function can be used in the configuration for different indication and alarming reasons, or can be sent to the station control for the same purpose.

20.2 Change lock CHNGLCK

20.2.1 Application

Change lock function CHNGLCK is used to block further changes to the IED configuration once the commissioning is complete. The purpose is to make it impossible to perform inadvertent IED configuration and setting changes.

However, when activated, CHNGLCK will still allow the following actions that does not involve reconfiguring of the IED:

- Monitoring
- Reading events
- Resetting events
- Reading disturbance data
- Clear disturbances
- Reset LEDs
- Reset counters and other runtime component states

- Control operations
- Set system time
- Enter and exit from test mode
- Change of active setting group

The binary input controlling the function is defined in ACT or SMT. The CHNGLCK function is configured using ACT.

LOCK	Binary input signal that will activate/deactivate the function, defined in ACT or SMT.

When CHNGLCK has a logical one on its input, then all attempts to modify the IED configuration and setting will be denied and the message "Error: Changes blocked" will be displayed on the local HMI; in PCM600 the message will be "Operation denied by active ChangeLock". The CHNGLCK function should be configured so that it is controlled by a signal from a binary input card. This guarantees that by setting that signal to a logical zero, CHNGLCK is deactivated. If any logic is included in the signal path to the CHNGLCK input, that logic must be designed so that it cannot permanently issue a logical one to the CHNGLCK input. If such a situation would occur in spite of these precautions, then please contact the local ABB representative for remedial action.

20.3 Denial of service DOS

20.3.1 Application

The denial of service functions (DOSFRNT, DOSLANAB and DOSLANCD) are designed to limit the CPU load that can be produced by Ethernet network traffic on the IED. The communication facilities must not be allowed to compromise the primary functionality of the device. All inbound network traffic will be quota controlled so that too heavy network loads can be controlled. Heavy network load might for instance be the result of malfunctioning equipment connected to the network.

DOSFRNT, DOSLANAB and DOSLANCD measure the IED load from communication and, if necessary, limit it for not jeopardizing the IEDs control and protection functionality due to high CPU load. The function has the following outputs:

- LINKUP indicates the Ethernet link status
- WARNING indicates that communication (frame rate) is higher than normal
- ALARM indicates that the IED limits communication

20.3.2 Setting guidelines

The function does not have any parameters available in the local HMI or PCM600.

20.4 IED identifiers

20.4.1 Application

IED identifiers (TERMINALID) function allows the user to identify the individual IED in the system, not only in the substation, but in a whole region or a country.

Use only characters A-Z, a-z and 0-9 in station, object and unit names.

20.5 Product information

20.5.1 Application

The Product identifiers function contains constant data (i.e. not possible to change) that uniquely identifies the IED:

- ProductVer
- ProductDef
- SerialNo
- OrderingNo
- ProductionDate
- IEDProdType

The settings are visible on the local HMI , under **Main menu/Diagnostics/IED status/ Product identifiers**and under**Main menu/Diagnostics/IED Status/IED identifiers**

This information is very helpful when interacting with ABB product support (e.g. during repair and maintenance).

20.5.2 Factory defined settings

The factory defined settings are very useful for identifying a specific version and very helpful in the case of maintenance, repair, interchanging IEDs between different

Substation Automation Systems and upgrading. The factory made settings can not be changed by the customer. They can only be viewed. The settings are found in the local HMI under **Main menu/Diagnostics/IED status/Product identifiers**

The following identifiers are available:

- IEDProdType
  - Describes the type of the IED (like REL, REC or RET). Example: *REL670*
- ProductDef
  - Describes the release number, from the production. Example: *1.2.2.0*
- ProductVer
  - Describes the product version. Example: *1.2.3*

1	is the Major version of the manufactured product this means, new platform of the product
2	is the Minor version of the manufactured product this means, new functions or new hardware added to the product
3	is the Major revision of the manufactured product this means, functions or hardware is either changed or enhanced in the product

- IEDMainFunType
  - Main function type code according to IEC 60870-5-103. Example: 128 (meaning line protection).
- SerialNo
- OrderingNo
- ProductionDate

20.6 Measured value expander block RANGE_XP

20.6.1 Identification

Function description	IEC 61850 identification	IEC 60617 identification	ANSI/IEEE C37.2 device number
Measured value expander block	RANGE_XP	-	-

20.6.2 Application

The current and voltage measurements functions (CVMMXN, CMMXU, VMMXU and VNMMXU), current and voltage sequence measurement functions (CMSQI and VMSQI) and IEC 61850 generic communication I/O functions (MVGAPC) are provided with

measurement supervision functionality. All measured values can be supervised with four settable limits, that is low-low limit, low limit, high limit and high-high limit. The measure value expander block (RANGE_XP) has been introduced to be able to translate the integer output signal from the measuring functions to 5 binary signals, that is below low-low limit, below low limit, normal, above high-high limit or above high limit. The output signals can be used as conditions in the configurable logic.

20.6.3 Setting guidelines

There are no settable parameters for the measured value expander block function.

20.7 Parameter setting groups

20.7.1 Application

Six sets of settings are available to optimize IED operation for different power system conditions. By creating and switching between fine tuned setting sets, either from the local HMI or configurable binary inputs, results in a highly adaptable IED that can cope with a variety of power system scenarios.

Different conditions in networks with different voltage levels require highly adaptable protection and control units to best provide for dependability, security and selectivity requirements. Protection units operate with a higher degree of availability, especially, if the setting values of their parameters are continuously optimized according to the conditions in the power system.

Operational departments can plan for different operating conditions in the primary equipment. The protection engineer can prepare the necessary optimized and pre-tested settings in advance for different protection functions. Six different groups of setting parameters are available in the IED. Any of them can be activated through the different programmable binary inputs by means of external or internal control signals.

A function block, SETGRPS, defines how many setting groups are used. Setting is done with parameter *MAXSETGR* and shall be set to the required value for each IED. Only the number of setting groups set will be available in the Parameter Setting tool for activation with the ActiveGroup function block.

20.7.2 Setting guidelines

The setting *ActiveSetGrp*, is used to select which parameter group to be active. The active group can also be selected with configured input to the function block SETGRPS.

The length of the pulse, sent out by the output signal GRP_CHGD when an active group has changed, is set with the parameter *t*.

The parameter *MAXSETGR* defines the maximum number of setting groups in use to switch between. Only the selected number of setting groups will be available in the Parameter Setting tool (PST) for activation with the ActiveGroup function block.

20.8 Rated system frequency PRIMVAL

20.8.1 Identification

Function description	IEC 61850 identification	IEC 60617 identification	ANSI/IEEE C37.2 device number
Primary system values	PRIMVAL	-	-

20.8.2 Application

The rated system frequency is set under **Main menu/General settings/ Power system/ Primary Values** in the local HMI and PCM600 parameter setting tree.

20.8.3 Setting guidelines

Set the system rated frequency. Refer to section "Signal matrix for analog inputs SMAI" for description on frequency tracking.

20.9 Summation block 3 phase 3PHSUM

20.9.1 Application

The analog summation block 3PHSUM function block is used in order to get the sum of two sets of 3 phase analog signals (of the same type) for those IED functions that might need it.

20.9.2 Setting guidelines

The summation block receives the three-phase signals from SMAI blocks. The summation block has several settings.

SummationType: Summation type (*Group 1 + Group 2*, *Group 1 - Group 2*, *Group 2 - Group 1* or *–(Group 1 + Group 2)*).

DFTReference: The reference DFT block (*InternalDFT Ref*,*DFTRefGrp1* or *External DFT ref*) .

FreqMeasMinVal: The minimum value of the voltage for which the frequency is calculated, expressed as percent of *VBase*base voltage setting (for each instance x).

GlobalBaseSel: Selects the global base value group used by the function to define (*IBase*), (*VBase*) and (*SBase*).

20.10 Global base values GBASVAL

20.10.1 Identification

Function description	IEC 61850 identification	IEC 60617 identification	ANSI/IEEE C37.2 device number
Global base values	GBASVAL	-	-

20.10.2 Application

Global base values function (GBASVAL) is used to provide global values, common for all applicable functions within the IED. One set of global values consists of values for current, voltage and apparent power and it is possible to have six different sets.

This is an advantage since all applicable functions in the IED use a single source of base values. This facilitates consistency throughout the IED and also facilitates a single point for updating values when necessary.

Each applicable function in the IED has a parameter, *GlobalBaseSel*, defining one out of the six sets of GBASVAL functions.

20.10.3 Setting guidelines

VBase: Phase-to-phase voltage value to be used as a base value for applicable functions throughout the IED.

IBase: Phase current value to be used as a base value for applicable functions throughout the IED.

SBase: Standard apparent power value to be used as a base value for applicable functions throughout the IED, typically $SBase=\sqrt{3}\cdot VBase\cdot IBase$.

20.11 Signal matrix for binary inputs SMBI

20.11.1 Application

The Signal matrix for binary inputs function SMBI is used within the Application Configuration tool in direct relation with the Signal Matrix tool. SMBI represents the way binary inputs are brought in for one IED configuration.

20.11.2 Setting guidelines

There are no setting parameters for the Signal matrix for binary inputs SMBI available to the user in Parameter Setting tool. However, the user shall give a name to SMBI instance and the SMBI inputs, directly in the Application Configuration tool. These names will define SMBI function in the Signal Matrix tool. The user defined name for the input or output signal will also appear on the respective output or input signal.

20.12 Signal matrix for binary outputs SMBO

20.12.1 Application

The Signal matrix for binary outputs function SMBO is used within the Application Configuration tool in direct relation with the Signal Matrix tool. SMBO represents the way binary outputs are sent from one IED configuration.

20.12.2 Setting guidelines

There are no setting parameters for the Signal matrix for binary outputs SMBO available to the user in Parameter Setting tool. However, the user must give a name to SMBO instance and SMBO outputs, directly in the Application Configuration tool. These names will define SMBO function in the Signal Matrix tool.

20.13 Signal matrix for mA inputs SMMI

20.13.1 Application

The Signal matrix for mA inputs function SMMI is used within the Application Configuration tool in direct relation with the Signal Matrix tool. SMMI represents the way milliamp (mA) inputs are brought in for one IED configuration.

20.13.2 Setting guidelines

There are no setting parameters for the Signal matrix for mA inputs SMMI available to the user in the Parameter Setting tool. However, the user must give a name to SMMI instance and SMMI inputs, directly in the Application Configuration tool.

20.14 Signal matrix for analog inputs SMAI

20.14.1 Application

Signal matrix for analog inputs (SMAI), also known as the preprocessor function block, analyses the connected four analog signals (three phases and neutral) and calculates all relevant information from them like the phasor magnitude, phase angle, frequency, true RMS value, harmonics, sequence components and so on. This information is then used by the respective functions connected to this SMAI block in ACT (for example protection, measurement or monitoring functions).

20.14.2 Frequency values

The frequency functions includes a functionality based on level of positive sequence voltage, *IntBlockLevel*, to validate if the frequency measurement is valid or not. If positive

sequence voltage is lower than *IntBlockLevel* the function is blocked. *IntBlockLevel*, is set in % of *VBase*/√3

If SMAI setting *ConnectionType* is *Ph-Ph* at least two of the inputs GRPx_A, GRPx_B and GRPx_C must be connected in order to calculate positive sequence voltage. Note that phase to phase inputs shall always be connected as follows: L1-L2 to GRPxL1, L2-L3 to GRPxL2, L3-L1 to GRPxL3. If SMAI setting *ConnectionType* is *Ph-N*, all three inputs GRPx_A, GRPx_B and GRPx_C must be connected in order to calculate positive sequence voltage.

If only one phase-phase voltage is available and SMAI setting *ConnectionType* is *Ph-Ph* the user is advised to connect two (not three) of the inputs GRPx_A, GRPx_B and GRPx_C to the same voltage input as shown in figure 204 to make SMAI calculating a positive sequence voltage.

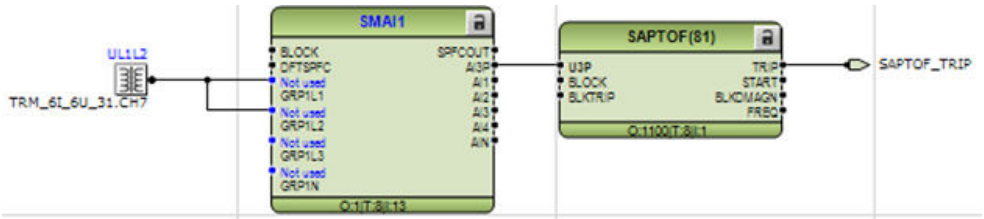

IEC10000060-1-en.vsd

Figure 204: Connection example

The above described scenario does not work if SMAI setting *ConnectionType* is *Ph-N*. If only one phase-ground voltage is available, the same type of connection can be used but the SMAI *ConnectionType* setting must still be *Ph-Ph* and this has to be accounted for when setting *IntBlockLevel*. If SMAI setting *ConnectionType* is *Ph-N* and the same voltage is connected to all three SMAI inputs, the positive sequence voltage will be zero and the frequency functions will not work properly.

The outputs from the above configured SMAI block shall only be used for Overfrequency protection (SAPTOF, 81), Underfrequency protection (SAPTUF, 81) and Rate-of-change frequency protection (SAPFRC, 81) due to that all other information except frequency and positive sequence voltage might be wrongly calculated.

20.14.3 Setting guidelines

The parameters for the signal matrix for analog inputs (SMAI) functions are set via the local HMI or PCM600.

Every SMAI function block can receive four analog signals (three phases and one neutral value), either voltage or current. SMAI outputs give information about every aspect of the 3ph analog signals acquired (phase angle, RMS value, frequency and frequency derivates, and so on – 244 values in total). Besides the block “group name”, the analog inputs type (voltage or current) and the analog input names that can be set directly in ACT.

Application functions should be connected to a SMAI block with same task cycle as the application function, except for e.g. measurement functions that run in slow cycle tasks.

DFTRefExtOut: Parameter valid only for function block SMAI1 .

Reference block for external output (SPFCOUT function output).

DFTReference: Reference DFT for the SMAI block use.

These DFT reference block settings decide DFT reference for DFT calculations. The setting *InternalDFTRef* will use fixed DFT reference based on set system frequency. *DFTRefGrp(n)* will use DFT reference from the selected group block, when own group is selected, an adaptive DFT reference will be used based on calculated signal frequency from own group. The setting *ExternalDFTRef* will use reference based on what is connected to input DFTSPFC.

The setting *ConnectionType*: Connection type for that specific instance (n) of the SMAI (if it is *Ph-N* or *Ph-Ph*). Depending on connection type setting the not connected *Ph-N* or *Ph-Ph* outputs will be calculated as long as they are possible to calculate. E.g. at *Ph-Ph* connection A, B and C will be calculated for use in symmetrical situations. If N component should be used respectively the phase component during faults I_N/V_N must be connected to input 4.

Negation: If the user wants to negate the 3ph signal, it is possible to choose to negate only the phase signals *Negate3Ph*, only the neutral signal *NegateN* or both *Negate3Ph+N*. negation means rotation with 180° of the vectors.

GlobalBaseSel: Selects the global base value group used by the function to define (*IBase*), (*VBase*) and (*SBase*).

MinValFreqMeas: The minimum value of the voltage for which the frequency is calculated, expressed as percent of VBase (for each instance n).

Settings *DFTRefExtOut* and *DFTReference* shall be set to default value *InternalDFTRef* if no VT inputs are available.

Even if the user sets the *AnalogInputType* of a SMAI block to "*Current*", the *MinValFreqMeas* is still visible. However, using the current channel values as base for frequency measurement is **not recommendable** for a number of reasons, not last among them being the low level of currents that one can have in normal operating conditions.

Examples of adaptive frequency tracking

Preprocessing block shall only be used to feed functions within the same execution cycles (e.g. use preprocessing block with cycle 1 to feed transformer differential protection). The only exceptions are measurement functions (CVMMXN, CMMXU,VMMXU, etc.) which shall be fed by preprocessing blocks with cycle 8.

When two or more preprocessing blocks are used to feed one protection function (e.g. over-power function GOPPDOP), it is of outmost importance that parameter setting DFTReference has the same set value for all of the preprocessing blocks involved

Task time group 1	
SMAI instance	**3 phase group**
SMAI1:1	1
SMAI2:2	2
SMAI3:3	3
SMAI4:4	4
SMAI5:5	5
SMAI6:6	6
SMAI7:7	7
SMAI8:8	8
SMAI9:9	9
SMAI10:10	10
SMAI11:11	11
SMAI12:12	12

AdDFTRefCh7

Task time group 2	
SMAI instance	**3 phase group**
SMAI1:13	1
SMAI2:14	2
SMAI3:15	3
SMAI4:16	4
SMAI5:17	5
SMAI6:18	6
SMAI7:19	7
SMAI8:20	8
SMAI9:21	9
SMAI10:22	10
SMAI11:23	11
SMAI12:24	12

AdDFTRefCh4

Task time group 3	
SMAI instance	**3 phase group**
SMAI1:25	1
SMAI2:26	2
SMAI3:27	3
SMAI4:28	4
SMAI5:29	5
SMAI6:30	6
SMAI7:31	7
SMAI8:32	8
SMAI9:33	9
SMAI10:34	10
SMAI11:35	11
SMAI12:36	12

IEC07000197.vsd

Figure 205: Twelve SMAI instances are grouped within one task time. SMAI blocks are available in three different task times in the IED. Two pointed instances are used in the following examples.

The examples shows a situation with adaptive frequency tracking with one reference selected for all instances. In practice each instance can be adapted to the needs of the actual application. The adaptive frequency tracking is needed in IEDs that belong to the protection system of synchronous machines and that are active during run-up and shout-

down of the machine. In other application the usual setting of the parameter *DFTReference* of SMAI is *InternalDFTRef*.

Example 1

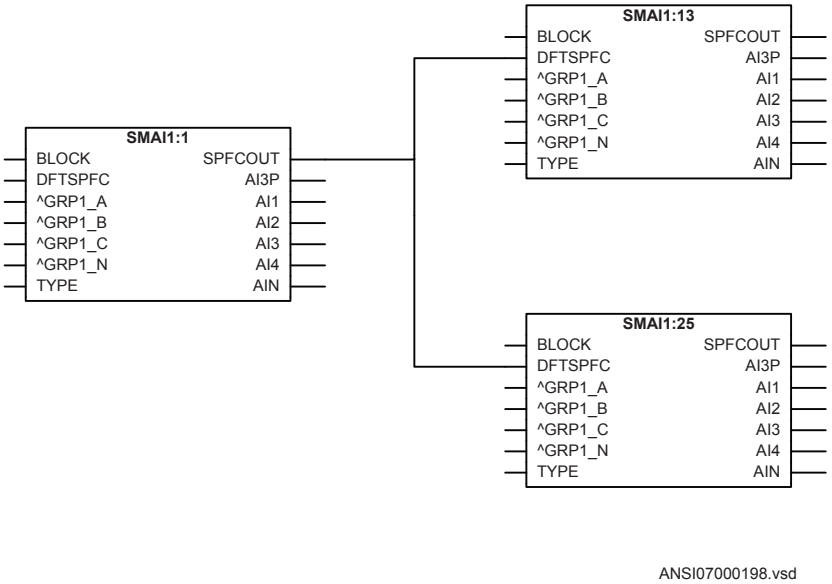

Figure 206: Configuration for using an instance in task time group 1 as DFT reference

Assume instance SMAI7:7 in task time group 1 has been selected in the configuration to control the frequency tracking . Observe that the selected reference instance (i.e. frequency tracking master) must be a voltage type. Observe that positive sequence voltage is used for the frequency tracking feature.

For task time group 1 this gives the following settings (see Figure 205 for numbering):

SMAI1:1: *DFTRefExtOut* = *DFTRefGrp7* to route SMAI7:7 reference to the SPFCOUT output, *DFTReference* = *DFTRefGrp7* for SMAI1:1 to use SMAI7:7 as reference (see Figure 206) SMAI2:2 – SMAI12:12: *DFTReference* = *DFTRefGrp7* for SMAI2:2 – SMAI12:12 to use SMAI7:7 as reference.

For task time group 2 this gives the following settings:

SMAI1:13 – SMAI12:24: *DFTReference* = *ExternalDFTRef* to use DFTSPFC input of SMAI1:13 as reference (SMAI7:7)

For task time group 3 this gives the following settings:

SMAI1:25 – SMAI12:36: *DFTReference* = *ExternalDFTRef* to use DFTSPFC input as reference (SMAI7:7)

Example 2

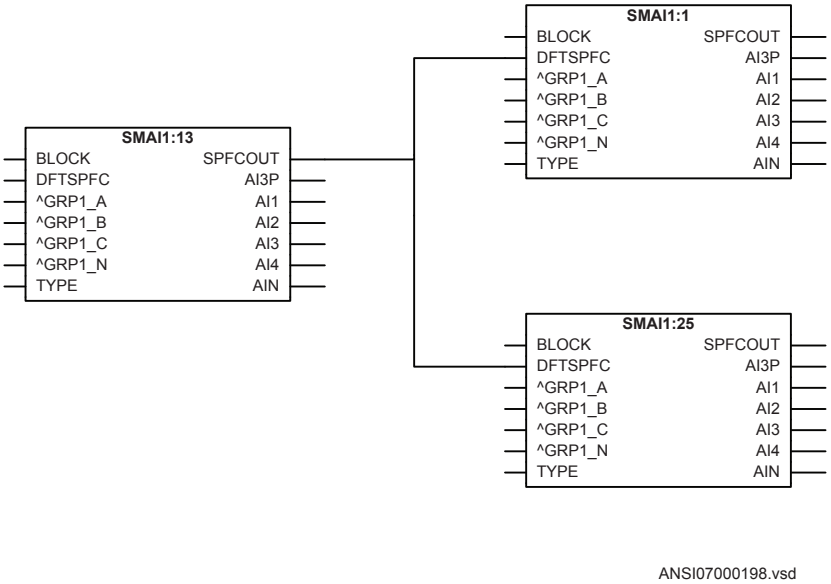

Figure 207: Configuration for using an instance in task time group 2 as DFT reference.

Assume instance SMAI4:16 in task time group 2 has been selected in the configuration to control the frequency tracking for all instances. Observe that the selected reference instance (i.e. frequency tracking master) must be a voltage type. Observe that positive sequence voltage is used for the frequency tracking feature.

For task time group 1 this gives the following settings (see Figure 205 for numbering):

SMAI1:1 – SMAI12:12: *DFTReference* = *ExternalDFTRef* to use DFTSPFC input as reference (SMAI4:16)

For task time group 2 this gives the following settings:

SMAI1:13: *DFTRefExtOut* = *DFTRefGrp4* to route SMAI4:16 reference to the SPFCOUT output, *DFTReference* = *DFTRefGrp4* for SMAI1:13 to use SMAI4:16 as reference (see Figure 207) SMAI2:14 – SMAI12:24: *DFTReference* = *DFTRefGrp4* to use SMAI4:16 as reference.

For task time group 3 this gives the following settings:

SMAI1:25 – SMAI12:36: *DFTReference* = *ExternalDFTRef* to use DFTSPFC input as reference (SMAI4:16)

20.15 Test mode functionality TEST

20.15.1 Application

The protection and control IEDs may have a complex configuration with many included functions. To make the testing procedure easier, the IEDs include the feature that allows individual blocking of a single-, several-, or all functions.

This means that it is possible to see when a function is activated or trips. It also enables the user to follow the operation of several related functions to check correct functionality and to check parts of the configuration, and so on.

20.15.1.1 IEC 61850 protocol test mode

The IEC 61850 Test Mode has improved testing capabilities for IEC 61850 systems. Operator commands sent to the IEC 61850 Mod determine the behavior of the functions. The command can be given from the LHMI under the **Main menu/Test/Function test modes** menu or remotely from an IEC 61850 client. The possible values of IEC 61850 Mod are described in *Communication protocol manual, IEC 61850 Edition 1* and *Edition 2*.

To be able to set the IEC61850 Mod the parameter remotely, the PST setting *RemoteModControl* may not be set to *Off*. The possible values are *Off*, *Maintenance* or *All levels*. The *Off* value denies all access to data object Mod from remote, *Maintenance* requires that the category of the originator (orCat) is *Maintenance* and *All levels* allow any orCat.

The mod of the Root LD.LNN0 can be configured under **Main menu/Test/Function test modes/Communication/Station communication/IEC61850 LD0 LLN0/LD0LLN0:1**

When the Mod is changed at this level, all components under the logical device update their own behavior according to IEC61850-7-4. The supported values of IEC61850 Mod are described in *Communication protocol manual, IEC 61850 Edition 2*. The IEC61850 test mode is indicated with the Start LED on the LHMI.

The mod of an specific component can be configured under **Main menu/Test/Function test modes/Communication/Station Communication**

It is possible that the behavior is also influenced by other sources as well, independent of the mode, such as the insertion of the test handle, loss of SV, and IED configuration or LHMI. If a function of an IED is set to *Off*, the related *Beh* is set to *Off* as well. The related mod keeps its current state.

When the setting *Operation* is set to *Off*, the behavior is set to *Off* and it is not possible to override it. When a behavior of a function is *Off*the function will not execute.

When IEC61850 Mod of a function is set to *Off* or *Blocked*, the Start LED on the LHMI will be set to flashing to indicate the abnormal operation of the IED.

The IEC61850-7-4 gives a detailed overview over all aspects of the test mode and other states of mode and behavior.

- When the *Beh* of a component is set to *Test*, the component is not blocked and all control commands with a test bit are accepted.
- When the *Beh* of a component is set to *Test/blocked*, all control commands with a test bit are accepted. Outputs to the process via a non-IEC 61850 link data are blocked by the LN. Only process-related outputs on LNs related to primary equipment are blocked. If there is an XCBR, the outputs *EXC_Open* and *EXC_Close* are blocked.
- When the *Beh* of a component is set to *Blocked*, all control commands with a test bit are accepted. Outputs to the process via a non-IEC 61850 link data are blocked by the LN. In addition, the components can be blocked when their *Beh* is *blocked*. This can be done if the component has a block input. The block status of a component is shown as the *Blk* output under the **Test/Function status** menu. If the *Blk* output is not shown, the component cannot be blocked.

20.15.2 Setting guidelines

Remember always that there are two possible ways to place the IED in the *TestMode= Enabled*" state. If, the IED is set to normal operation (*TestMode = Disabled*), but the functions are still shown being in the test mode, the input signal INPUT on the TESTMODE function block might be activated in the configuration.

20.16 Self supervision with internal event list

20.16.1 Application

The protection and control IEDs have many functions included . The included self-supervision with internal event list function block provides good supervision of the IED. The fault signals make it easier to analyze and locate a fault.

Both hardware and software supervision is included and it is also possible to indicate possible faults through a hardware contact on the power supply module and/or through the software communication.

Internal events are generated by the built-in supervisory functions. The supervisory functions supervise the status of the various modules in the IED and, in case of failure, a corresponding event is generated. Similarly, when the failure is corrected, a corresponding event is generated.

Apart from the built-in supervision of the various modules, events are also generated when the status changes for the:

- built-in real time clock (in operation/out of order).
- external time synchronization (in operation/out of order).

Events are also generated:

- whenever any setting in the IED is changed.

The internal events are time tagged with a resolution of 1 ms and stored in a list. The list can store up to 40 events. The list is based on the FIFO principle, that is, when it is full, the oldest event is overwritten. The list contents cannot be modified, but the whole list can be cleared using the Reset menu in the LHMI.

The list of internal events provides valuable information, which can be used during commissioning and fault tracing.

The information can only be retrieved with the aid of PCM600 Event Monitoring Tool. The PC can either be connected to the front port, or to the port at the back of the IED.

20.17 Time synchronization

20.17.1 Application

Use time synchronization to achieve a common time base for the IEDs in a protection and control system. This makes it possible to compare events and disturbance data between all IEDs in the system.

Time-tagging of internal events and disturbances are an excellent help when evaluating faults. Without time synchronization, only the events within the IED can be compared to one another. With time synchronization, events and disturbances within the entire station, and even between line ends, can be compared at evaluation.

In the IED, the internal time can be synchronized from a number of sources:

- BIN (Binary Minute Pulse)
- DNP
- GPS
- IEC103

- SNTP
- IRIG-B
- SPA
- LON
- PPS

Out of these, LON and SPA contains two types of synchronization messages:

- Coarse time messages are sent every minute and contain complete date and time, that is year, month, day, hour, minute, second and millisecond.
- Fine time messages are sent every second and comprise only seconds and milliseconds.

The setting tells the IED which of these that shall be used to synchronize the IED.

It is possible to set a backup time-source for GPS signal, for instance SNTP. In this case, when the GPS signal quality is bad, the IED will automatically choose SNTP as the time-source. At a given point in time, only one time-source will be used.

20.17.2 Setting guidelines

System time

The time is set with years, month, day, hour, minute, second and millisecond.

Synchronization

The setting parameters for the real-time clock with external time synchronization (TIME) are set via local HMI or PCM600.

TimeSynch

When the source of the time synchronization is selected on the local HMI, the parameter is called *TimeSynch*. The time synchronization source can also be set from PCM600. The setting alternatives are:

FineSyncSource which can have the following values:

- *Disabled*
- *SPA*
- *LON*
- *BIN* (Binary Minute Pulse)
- *GPS*
- *GPS+SPA*
- *GPS+LON*
- *GPS+BIN*
- *SNTP*

- *GPS+SNTP*
- *GPS+IRIG-B*
- *IRIG-B*
- *PPS*

CoarseSyncSrc which can have the following values:

- *Disabled*
- *SPA*
- *LON*
- *SNTP*
- *DNP*

The function input to be used for minute-pulse synchronization is called BININPUT.

The system time can be set manually, either via the local HMI or via any of the communication ports. The time synchronization fine tunes the clock (seconds and milliseconds).

The parameter *SyncMaster* defines if the IED is a master, or not a master for time synchronization in a system of IEDs connected in a communication network (IEC61850-8-1). The *SyncMaster* can have the following values:

- *Disabled*
- *SNTP -Server*

Set the course time synchronizing source (*CoarseSyncSrc*) to *Disabled* when GPS time synchronization of line differential function is used. Set the fine time synchronization source (*FineSyncSource*) to *GPS*. The GPS will thus provide the complete time synchronization. GPS alone shall synchronize the analogue values in such systems.

Section 21 Requirements

21.1 Current transformer requirements

The performance of a protection function will depend on the quality of the measured current signal. Saturation of the current transformers (CTs) will cause distortion of the current signals and can result in a failure to operate or cause unwanted operations of some functions. Consequently CT saturation can have an influence on both the dependability and the security of the protection. This protection IED has been designed to permit heavy CT saturation with maintained correct operation.

21.1.1 Current transformer classification

To guarantee correct operation, the current transformers (CTs) must be able to correctly reproduce the current for a minimum time before the CT will begin to saturate. To fulfill the requirement on a specified time to saturation the CTs must fulfill the requirements of a minimum secondary e.m.f. that is specified below.

There are several different ways to specify CTs. Conventional magnetic core CTs are usually specified and manufactured according to some international or national standards, which specify different protection classes as well. There are many different standards and a lot of classes but fundamentally there are three different types of CTs:

- High remanence type CT
- Low remanence type CT
- Non remanence type CT

The high remanence type has no limit for the remanent flux. This CT has a magnetic core without any airgaps and a remanent flux might remain almost infinite time. In this type of transformers the remanence can be up to around 80% of the saturation flux. Typical examples of high remanence type CT are class P, PX, TPX according to IEC, class P, X according to BS (old British Standard) and non gapped class C, K according to ANSI/IEEE.

The low remanence type has a specified limit for the remanent flux. This CT is made with a small air gap to reduce the remanence to a level that does not exceed 10% of the saturation flux. The small air gap has only very limited influences on the other properties of the CT. Class PXR, TPY according to IEC are low remanence type CTs.

The non remanence type CT has practically negligible level of remanent flux. This type of CT has relatively big air gaps in order to reduce the remanence to practically zero level. In the same time, these air gaps reduce the influence of the DC-component from the primary fault current. The air gaps will also decrease the measuring accuracy in the non-saturated region of operation. Class TPZ according to IEC is a non remanence type CT.

Different standards and classes specify the saturation e.m.f. in different ways but it is possible to approximately compare values from different classes. The rated equivalent limiting secondary e.m.f. E_{al} according to the IEC 61869–2 standard is used to specify the CT requirements for the IED. The requirements are also specified according to other standards.

21.1.2 Conditions

The requirements are a result of investigations performed in our network simulator. The current transformer models are representative for current transformers of high remanence and low remanence type. The results may not always be valid for non remanence type CTs (TPZ).

The performances of the protection functions have been checked in the range from symmetrical to fully asymmetrical fault currents. Primary time constants of at least 120 ms have been considered at the tests. The current requirements below are thus applicable both for symmetrical and asymmetrical fault currents.

Depending on the protection function phase-to-ground, phase-to-phase and three-phase faults have been tested for different relevant fault positions for example, close in forward and reverse faults, zone 1 reach faults, internal and external faults. The dependability and security of the protection was verified by checking for example, time delays, unwanted operations, directionality, overreach and stability.

The remanence in the current transformer core can cause unwanted operations or minor additional time delays for some protection functions. As unwanted operations are not acceptable at all maximum remanence has been considered for fault cases critical for the security, for example, faults in reverse direction and external faults. Because of the almost negligible risk of additional time delays and the non-existent risk of failure to operate the remanence have not been considered for the dependability cases. The requirements below are therefore fully valid for all normal applications.

It is difficult to give general recommendations for additional margins for remanence to avoid the minor risk of an additional time delay. They depend on the performance and economy requirements. When current transformers of low remanence type (for example, TPY, PR) are used, normally no additional margin is needed. For current transformers of high remanence type (for example, P, PX, TPX) the small probability of fully asymmetrical faults, together with high remanence in the same direction as the flux generated by the fault, has to be kept in mind at the decision of an additional margin. Fully

asymmetrical fault current will be achieved when the fault occurs at approximately zero voltage (0°). Investigations have shown that 95% of the faults in the network will occur when the voltage is between 40° and 90°. In addition fully asymmetrical fault current will not exist in all phases at the same time.

21.1.3 Fault current

The current transformer requirements are based on the maximum fault current for faults in different positions. Maximum fault current will occur for three-phase faults or single phase-to-ground faults. The current for a single phase-to-ground fault will exceed the current for a three-phase fault when the zero sequence impedance in the total fault loop is less than the positive sequence impedance.

When calculating the current transformer requirements, maximum fault current for the relevant fault position should be used and therefore both fault types have to be considered.

21.1.4 Secondary wire resistance and additional load

The voltage at the current transformer secondary terminals directly affects the current transformer saturation. This voltage is developed in a loop containing the secondary wires and the burden of all relays in the circuit. For ground faults the loop includes the phase and neutral wire, normally twice the resistance of the single secondary wire. For three-phase faults the neutral current is zero and it is just necessary to consider the resistance up to the point where the phase wires are connected to the common neutral wire. The most common practice is to use four wires secondary cables so it normally is sufficient to consider just a single secondary wire for the three-phase case.

The conclusion is that the loop resistance, twice the resistance of the single secondary wire, must be used in the calculation for phase-to-ground faults and the phase resistance, the resistance of a single secondary wire, may normally be used in the calculation for three-phase faults.

As the burden can be considerable different for three-phase faults and phase-to-ground faults it is important to consider both cases. Even in a case where the phase-to-ground fault current is smaller than the three-phase fault current the phase-to-ground fault can be dimensioning for the CT depending on the higher burden.

In isolated or high impedance grounded systems the phase-to-ground fault is not the dimensioning case. Therefore, the resistance of the single secondary wire can always be used in the calculation for this kind of power systems.

21.1.5 General current transformer requirements

The current transformer ratio is mainly selected based on power system data for example, maximum load and/or maximum fault current. It should be verified that the current to the protection is higher than the minimum operating value for all faults that are to be detected with the selected CT ratio. It should also be verified that the maximum possible fault current is within the limits of the IED.

The current error of the current transformer can limit the possibility to use a very sensitive setting of a sensitive residual overcurrent protection. If a very sensitive setting of this function will be used it is recommended that the current transformer should have an accuracy class which have an current error at rated primary current that is less than ±1% (for example, 5P). If current transformers with less accuracy are used it is advisable to check the actual unwanted residual current during the commissioning.

21.1.6 Rated equivalent secondary e.m.f. requirements

With regard to saturation of the current transformer all current transformers of high remanence and low remanence type that fulfill the requirements on the rated equivalent limiting secondary e.m.f. E_{al} below can be used. The characteristic of the non remanence type CT (TPZ) is not well defined as far as the phase angle error is concerned. If no explicit recommendation is given for a specific function we therefore recommend contacting ABB to confirm that the non remanence type can be used.

The CT requirements for the different functions below are specified as a rated equivalent limiting secondary e.m.f. E_{al} according to the IEC 61869-2 standard. Requirements for CTs specified according to other classes and standards are given at the end of this section.

21.1.6.1 Breaker failure protection

The CTs must have a rated equivalent limiting secondary e.m.f. E_{al} that is larger than or equal to the required rated equivalent limiting secondary e.m.f. E_{alreq} below:

$$E_{al} \geq E_{alreq} = 5 \cdot I_{op} \cdot \frac{I_{sn}}{I_{pn}} \cdot \left(R_{CT} + R_L + \frac{S_R}{I_n^2} \right)$$

(Equation 131)

where:

I_{op} The primary operate value (A)

I_{pr} The rated primary CT current (A)

I_{sr} The rated secondary CT current (A)

I_n The nominal current of the protection IED (A)

R_{ct} The secondary resistance of the CT (Ω)

R_L The resistance of the secondary cable and additional load (Ω). The loop resistance containing the phase and neutral wires, must be used for faults in solidly grounded systems. The resistance of a single secondary wire should be used for faults in high impedance grounded systems.

S_R The burden of an IED current input channel (VA). S_R=0.020 VA/channel for I_r=1 A and S_R=0.150 VA/channel for I_r=5 A

21.1.6.2 Non-directional instantaneous and definitive time, phase and residual overcurrent protection

The CTs must have a rated equivalent limiting secondary e.m.f. E_{al} that is larger than or equal to the required rated equivalent limiting secondary e.m.f. E_{alreq} below:

$$E_{al} \geq E_{alreq} = 1.5 \cdot I_{op} \cdot \frac{I_{sn}}{I_{pn}} \cdot \left(R_{CT} + R_L + \frac{S_R}{I_n^2} \right)$$

(Equation 132)

where:

I_{op} The primary operate value (A)

I_{pr} The rated primary CT current (A)

I_{sr} The rated secondary CT current (A)

I_n The nominal current of the protection IED (A)

R_{ct} The secondary resistance of the CT (Ω)

R_L The resistance of the secondary cable and additional load (Ω). The loop resistance containing the phase and neutral wires, must be used for faults in solidly grounded systems. The resistance of a single secondary wire should be used for faults in high impedance grounded systems.

S_R The burden of an IED current input channel (VA). S_R=0.020 VA/channel for I_r=1 A and S_R=0.150 VA/channel for I_r=5 A

21.1.6.3 Non-directional inverse time delayed phase and residual overcurrent protection

The requirement according to Equation 133 and Equation 134 does not need to be fulfilled if the high set instantaneous or definitive time stage is used. In this case Equation 132 is the only necessary requirement.

If the inverse time delayed function is the only used overcurrent protection function the CTs must have a rated equivalent limiting secondary e.m.f. E_{al} that is larger than or equal to the required rated equivalent limiting secondary e.m.f. E_{alreq} below:

$$E_{al} \geq E_{alreq} = 20 \cdot I_{op} \cdot \frac{I_{sn}}{I_{pn}} \cdot \left(R_{CT} + R_L + \frac{S_R}{I_n^2} \right)$$

(Equation 133)

where

I_{op}	The primary current set value of the inverse time function (A)
I_{pr}	The rated primary CT current (A)
I_{sr}	The rated secondary CT current (A)
I_n	The nominal current of the protection IED (A)
R_{ct}	The secondary resistance of the CT (Ω)
R_L	The resistance of the secondary cable and additional load (Ω). The loop resistance containing the phase and neutral wires, must be used for faults in solidly grounded systems. The resistance of a single secondary wire should be used for faults in high impedance grounded systems.
S_R	The burden of an IED current input channel (VA). S_R=0.020 VA/channel for I_r=1 A and S_R=0.150 VA/channel for I_r=5 A

Independent of the value of I_{op} the maximum required E_{al} is specified according to the following:

$$E_{al} \geq E_{alreqmax} = I_{kmax} \cdot \frac{I_{sn}}{I_{pn}} \cdot \left(R_{CT} + R_L + \frac{S_R}{I_n^2} \right)$$

(Equation 134)

where

I_{kmax}	Maximum primary fundamental frequency current for close-in faults (A)

21.1.6.4 Directional phase and residual overcurrent protection

If the directional overcurrent function is used the CTs must have a rated equivalent limiting secondary e.m.f. E_{al} that is larger than or equal to the required rated equivalent limiting secondary e.m.f. E_{alreq} below:

$$E_{al} \geq E_{alreq} = I_{kmax} \cdot \frac{I_{sn}}{I_{pn}} \cdot \left(R_{CT} + R_L + \frac{S_R}{I_n^2} \right)$$

(Equation 135)

where:

I_{kmax}	Maximum primary fundamental frequency current for close-in forward and reverse faults (A)
I_{pr}	The rated primary CT current (A)
I_{sr}	The rated secondary CT current (A)
I_n	The rated current of the protection IED (A)
R_{ct}	The secondary resistance of the CT (Ω)
R_L	The resistance of the secondary cable and additional load (Ω). The loop resistance containing the phase and neutral wires, must be used for faults in solidly grounded systems. The resistance of a single secondary wire should be used for faults in high impedance grounded systems.
S_R	The burden of an IED current input channel (VA). S_R=0.020 VA/channel for I_r=1 A and S_R=0.150 VA/channel for I_r=5 A

21.1.7 Current transformer requirements for CTs according to other standards

All kinds of conventional magnetic core CTs are possible to use with the IEDs if they fulfill the requirements corresponding to the above specified expressed as the rated equivalent limiting secondary e.m.f. E_{al} according to the IEC 61869-2 standard. From different standards and available data for relaying applications it is possible to approximately calculate a secondary e.m.f. of the CT comparable with E_{al}. By comparing this with the required rated equivalent limiting secondary e.m.f. E_{alreq} it is possible to judge if the CT fulfills the requirements. The requirements according to some other standards are specified below.

21.1.7.1 Current transformers according to IEC 61869-2, class P, PR

A CT according to IEC 61869-2 is specified by the secondary limiting e.m.f. E_{alf}. The value of the E_{alf} is approximately equal to the corresponding E_{al}. Therefore, the CTs

according to class P and PR must have a secondary limiting e.m.f. E_{alf} that fulfills the following:

$$E_{2\max} > \max E_{alreq}$$

(Equation 136)

21.1.7.2 Current transformers according to IEC 61869-2, class PX, PXR (and old IEC 60044-6, class TPS and old British Standard, class X)

CTs according to these classes are specified approximately in the same way by a rated knee point e.m.f. E_{knee} (E_k for class PX and PXR, E_{kneeBS} for class X and the limiting secondary voltage V_{al} for TPS). The value of the E_{knee} is lower than the corresponding E_{al} according to IEC 61869-2. It is not possible to give a general relation between the E_{knee} and the E_{al} but normally the E_{knee} is approximately 80 % of the E_{al}. Therefore, the CTs according to class PX, PXR, X and TPS must have a rated knee point e.m.f. E_{knee} that fulfills the following:

$$S = TD \cdot S_{Old} + (1 - TD) \cdot S_{Calculated}$$

(Equation 137)

21.1.7.3 Current transformers according to ANSI/IEEE

Current transformers according to ANSI/IEEE are partly specified in different ways. A rated secondary terminal voltage V_{ANSI} is specified for a CT of class C. V_{ANSI} is the secondary terminal voltage the CT will deliver to a standard burden at 20 times rated secondary current without exceeding 10 % ratio correction. There are a number of standardized V_{ANSI} values for example, V_{ANSI} is 400 V for a C400 CT. A corresponding rated equivalent limiting secondary e.m.f. E_{alANSI} can be estimated as follows:

$$E_{alANSI} = \left|20 \cdot I_{SN} \cdot R_{CT} + V_{ANSI}\right| = \left|20 \cdot I_{SN} \cdot R_{CT} + 20 \cdot I_{SN} \cdot Z_{bANSI}\right|$$

(Equation 138)

where:

Z_{bANSI} The impedance (that is, with a complex quantity) of the standard ANSI burden for the specific C class (Ω)

V_{ANSI} The secondary terminal voltage for the specific C class (V)

The CTs according to class C must have a calculated rated equivalent limiting secondary e.m.f. E_{alANSI} that fulfils the following:

$$E_{alANSI} > \text{maximum of } E_{alreq}$$

(Equation 139)

A CT according to ANSI/IEEE is also specified by the knee point voltage $V_{kneeANSI}$ that is graphically defined from an excitation curve. The knee point voltage $V_{kneeANSI}$ normally has a lower value than the knee-point e.m.f. according to IEC and BS. $V_{kneeANSI}$ can approximately be estimated to 75 % of the corresponding E_{al} according to IEC 61869-2. Therefore, the CTs according to ANSI/IEEE must have a knee point voltage $V_{kneeANSI}$ that fulfills the following:

$$V_{kneeANSI} > 0.75 \cdot (\text{maximum of } E_{alreq})$$

(Equation 140)

The following guide may also be referred for some more application aspects of ANSI class CTs: IEEE C37.110 (2007), IEEE Guide for the Application of Current Transformers Used for Protective Relaying Purposes.

21.2 Voltage transformer requirements

The performance of a protection function will depend on the quality of the measured input signal. Transients caused by capacitive Coupled voltage transformers (CCVTs) can affect some protection functions.

Magnetic or capacitive voltage transformers can be used.

The capacitive voltage transformers (CCVTs) should fulfill the requirements according to the IEC 61869-5 standard regarding ferro-resonance and transients. The ferro-resonance requirements of the CCVTs are specified in chapter 6.502 of the standard.

The transient responses for three different standard transient response classes, T1, T2 and T3 are specified in chapter 6.503 of the standard. CCVTs according to all classes can be used.

The protection IED has effective filters for these transients, which gives secure and correct operation with CCVTs.

21.3 SNTP server requirements

The SNTP server to be used is connected to the local network, that is not more than 4-5 switches or routers away from the IED. The SNTP server is dedicated for its task, or at least equipped with a real-time operating system, that is not a PC with SNTP server software. The SNTP server should be stable, that is, either synchronized from a stable source like GPS, or local without synchronization. Using a local SNTP server without synchronization as primary or secondary server in a redundant configuration is not recommended.

Section 22 Glossary

AC	Alternating current
ACC	Actual channel
ACT	Application configuration tool within PCM600
A/D converter	Analog-to-digital converter
ADBS	Amplitude deadband supervision
ADM	Analog digital conversion module, with time synchronization
AI	Analog input
ANSI	American National Standards Institute
AR	Autoreclosing
ASCT	Auxiliary summation current transformer
ASD	Adaptive signal detection
ASDU	Application service data unit
AWG	American Wire Gauge standard
BBP	Busbar protection
BFOC/2,5	Bayonet fibre optic connector
BFP	Breaker failure protection
BI	Binary input
BIM	Binary input module
BOM	Binary output module
BOS	Binary outputs status
BR	External bistable relay
BS	British Standards
BSR	Binary signal transfer function, receiver blocks
BST	Binary signal transfer function, transmit blocks
C37.94	IEEE/ANSI protocol used when sending binary signals between IEDs
CAN	Controller Area Network. ISO standard (ISO 11898) for serial communication

CB	Circuit breaker
CBM	Combined backplane module
CCITT	Consultative Committee for International Telegraph and Telephony. A United Nations-sponsored standards body within the International Telecommunications Union.
CCM	CAN carrier module
CCVT	Capacitive Coupled Voltage Transformer
Class C	Protection Current Transformer class as per IEEE/ ANSI
CMPPS	Combined megapulses per second
CMT	Communication Management tool in PCM600
CO cycle	Close-open cycle
Codirectional	Way of transmitting G.703 over a balanced line. Involves two twisted pairs making it possible to transmit information in both directions
COM	Command
COMTRADE	Standard Common Format for Transient Data Exchange format for Disturbance recorder according to IEEE/ANSI C37.111, 1999 / IEC60255-24
Contra-directional	Way of transmitting G.703 over a balanced line. Involves four twisted pairs, two of which are used for transmitting data in both directions and two for transmitting clock signals
COT	Cause of transmission
CPU	Central processing unit
CR	Carrier receive
CRC	Cyclic redundancy check
CROB	Control relay output block
CS	Carrier send
CT	Current transformer
CU	Communication unit
CVT or CCVT	Capacitive voltage transformer
DAR	Delayed autoreclosing
DARPA	Defense Advanced Research Projects Agency (The US developer of the TCP/IP protocol etc.)
DBDL	Dead bus dead line

DBLL	Dead bus live line
DC	Direct current
DFC	Data flow control
DFT	Discrete Fourier transform
DHCP	Dynamic Host Configuration Protocol
DIP-switch	Small switch mounted on a printed circuit board
DI	Digital input
DLLB	Dead line live bus
DNP	Distributed Network Protocol as per IEEE Std 1815-2012
DR	Disturbance recorder
DRAM	Dynamic random access memory
DRH	Disturbance report handler
DSP	Digital signal processor
DTT	Direct transfer trip scheme
EHV network	Extra high voltage network
EIA	Electronic Industries Association
EMC	Electromagnetic compatibility
EMF	Electromotive force
EMI	Electromagnetic interference
EnFP	End fault protection
EPA	Enhanced performance architecture
ESD	Electrostatic discharge
F-SMA	Type of optical fibre connector
FAN	Fault number
FCB	Flow control bit; Frame count bit
FOX 20	Modular 20 channel telecommunication system for speech, data and protection signals
FOX 512/515	Access multiplexer
FOX 6Plus	Compact time-division multiplexer for the transmission of up to seven duplex channels of digital data over optical fibers
FUN	Function type

G.703	Electrical and functional description for digital lines used by local telephone companies. Can be transported over balanced and unbalanced lines
GCM	Communication interface module with carrier of GPS receiver module
GDE	Graphical display editor within PCM600
GI	General interrogation command
GIS	Gas-insulated switchgear
GOOSE	Generic object-oriented substation event
GPS	Global positioning system
GSAL	Generic security application
GTM	GPS Time Module
HDLC protocol	High-level data link control, protocol based on the HDLC standard
HFBR connector type	Plastic fiber connector
HMI	Human-machine interface
HSAR	High speed autoreclosing
HV	High-voltage
HVDC	High-voltage direct current
IDBS	Integrating deadband supervision
IEC	International Electrical Committee
IEC 60044-6	IEC Standard, Instrument transformers – Part 6: Requirements for protective current transformers for transient performance
IEC 60870-5-103	Communication standard for protection equipment. A serial master/slave protocol for point-to-point communication
IEC 61850	Substation automation communication standard
IEC 61850–8–1	Communication protocol standard
IEEE	Institute of Electrical and Electronics Engineers
IEEE 802.12	A network technology standard that provides 100 Mbits/s on twisted-pair or optical fiber cable
IEEE P1386.1	PCI Mezzanine Card (PMC) standard for local bus modules. References the CMC (IEEE P1386, also known as Common Mezzanine Card) standard for the mechanics and the PCI specifications from the PCI SIG (Special Interest Group) for the electrical EMF (Electromotive force).

IEEE 1686	Standard for Substation Intelligent Electronic Devices (IEDs) Cyber Security Capabilities
IED	Intelligent electronic device
I-GIS	Intelligent gas-insulated switchgear
IOM	Binary input/output module
Instance	When several occurrences of the same function are available in the IED, they are referred to as instances of that function. One instance of a function is identical to another of the same kind but has a different number in the IED user interfaces. The word "instance" is sometimes defined as an item of information that is representative of a type. In the same way an instance of a function in the IED is representative of a type of function.
IP	1. Internet protocol. The network layer for the TCP/IP protocol suite widely used on Ethernet networks. IP is a connectionless, best-effort packet-switching protocol. It provides packet routing, fragmentation and reassembly through the data link layer. 2. Ingression protection, according to IEC 60529
IP 20	Ingression protection, according to IEC 60529, level IP20- Protected against solid foreign objects of 12.5mm diameter and greater.
IP 40	Ingression protection, according to IEC 60529, level IP40-Protected against solid foreign objects of 1mm diameter and greater.
IP 54	Ingression protection, according to IEC 60529, level IP54-Dust-protected, protected against splashing water.
IRF	Internal failure signal
IRIG-B:	InterRange Instrumentation Group Time code format B, standard 200
ITU	International Telecommunications Union
LAN	Local area network
LIB 520	High-voltage software module
LCD	Liquid crystal display
LDCM	Line differential communication module
LDD	Local detection device
LED	Light-emitting diode

LNT	LON network tool
LON	Local operating network
MCB	Miniature circuit breaker
MCM	Mezzanine carrier module
MIM	Milli-ampere module
MPM	Main processing module
MVAL	Value of measurement
MVB	Multifunction vehicle bus. Standardized serial bus originally developed for use in trains.
NCC	National Control Centre
NOF	Number of grid faults
NUM	Numerical module
OCO cycle	Open-close-open cycle
OCP	Overcurrent protection
OEM	Optical Ethernet module
OLTC	On-load tap changer
OTEV	Disturbance data recording initiated by other event than start/ pick-up
OV	Overvoltage
Overreach	A term used to describe how the relay behaves during a fault condition. For example, a distance relay is overreaching when the impedance presented to it is smaller than the apparent impedance to the fault applied to the balance point, that is, the set reach. The relay “sees” the fault but perhaps it should not have seen it.
PCI	Peripheral component interconnect, a local data bus
PCM	Pulse code modulation
PCM600	Protection and control IED manager
PC-MIP	Mezzanine card standard
PMC	PCI Mezzanine card
POR	Permissive overreach
POTT	Permissive overreach transfer trip
Process bus	Bus or LAN used at the process level, that is, in near proximity to the measured and/or controlled components

PSM	Power supply module
PST	Parameter setting tool within PCM600
PT ratio	Potential transformer or voltage transformer ratio
PUTT	Permissive underreach transfer trip
RASC	Synchrocheck relay, COMBIFLEX
RCA	Relay characteristic angle
RISC	Reduced instruction set computer
RMS value	Root mean square value
RS422	A balanced serial interface for the transmission of digital data in point-to-point connections
RS485	Serial link according to EIA standard RS485
RTC	Real-time clock
RTU	Remote terminal unit
SA	Substation Automation
SBO	Select-before-operate
SC	Switch or push button to close
SCL	Short circuit location
SCS	Station control system
SCADA	Supervision, control and data acquisition
SCT	System configuration tool according to standard IEC 61850
SDU	Service data unit
SLM	Serial communication module.
SMA connector	Subminiature version A, A threaded connector with constant impedance.
SMT	Signal matrix tool within PCM600
SMS	Station monitoring system
SNTP	Simple network time protocol – is used to synchronize computer clocks on local area networks. This reduces the requirement to have accurate hardware clocks in every embedded system in a network. Each embedded node can instead synchronize with a remote clock, providing the required accuracy.
SOF	Status of fault

SPA	Strömberg Protection Acquisition (SPA), a serial master/slave protocol for point-to-point communication
SRY	Switch for CB ready condition
ST	Switch or push button to trip
Starpoint	Neutral/Wye point of transformer or generator
SVC	Static VAr compensation
TC	Trip coil
TCS	Trip circuit supervision
TCP	Transmission control protocol. The most common transport layer protocol used on Ethernet and the Internet.
TCP/IP	Transmission control protocol over Internet Protocol. The de facto standard Ethernet protocols incorporated into 4.2BSD Unix. TCP/IP was developed by DARPA for Internet working and encompasses both network layer and transport layer protocols. While TCP and IP specify two protocols at specific protocol layers, TCP/IP is often used to refer to the entire US Department of Defense protocol suite based upon these, including Telnet, FTP, UDP and RDP.
TEF	Time delayed gound-fault protection function
TM	Transmit (disturbance data)
TNC connector	Threaded Neill-Concelman, a threaded constant impedance version of a BNC connector
TP	Trip (recorded fault)
TPZ, TPY, TPX, TPS	Current transformer class according to IEC
TRM	Transformer Module. This module transforms currents and voltages taken from the process into levels suitable for further signal processing.
TYP	Type identification
UMT	User management tool
Underreach	A term used to describe how the relay behaves during a fault condition. For example, a distance relay is underreaching when the impedance presented to it is greater than the apparent impedance to the fault applied to the balance point, that is, the set reach. The relay does not “see” the fault but perhaps it should have seen it. See also Overreach.
UTC	Coordinated Universal Time. A coordinated time scale, maintained by the Bureau International des Poids et Mesures

	(BIPM), which forms the basis of a coordinated dissemination of standard frequencies and time signals. UTC is derived from International Atomic Time (TAI) by the addition of a whole number of "leap seconds" to synchronize it with Universal Time 1 (UT1), thus allowing for the eccentricity of the Earth's orbit, the rotational axis tilt (23.5 degrees), but still showing the Earth's irregular rotation, on which UT1 is based. The Coordinated Universal Time is expressed using a 24-hour clock, and uses the Gregorian calendar. It is used for aeroplane and ship navigation, where it is also sometimes known by the military name, "Zulu time." "Zulu" in the phonetic alphabet stands for "Z", which stands for longitude zero.
UV	Undervoltage
WEI	Weak end infeed logic
VT	Voltage transformer
X.21	A digital signalling interface primarily used for telecom equipment
$3I_O$	Three times zero-sequence current.Often referred to as the residual or the ground-fault current
$3V_O$	Three times the zero sequence voltage. Often referred to as the residual voltage or the neutral point voltage

Contact us

ABB AB
Substation Automation Products
SE-721 59 Västerås, Sweden
Phone +46 (0) 21 32 50 00
Fax +46 (0) 21 14 69 18

www.abb.com/substationautomation

1MRK 511 310-UUS A © Copyright 2014 ABB. All rights reserved.

Power and productivity
for a better world™