Tmax T to Tmax XT

Dimensional Comparison

T4 VS XT4

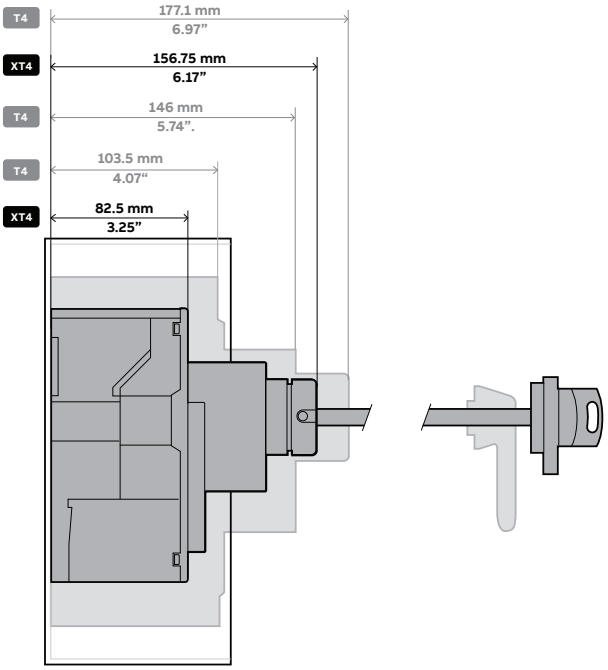

T4/XT4 FRAME SIZE DEPTH COMPARISON

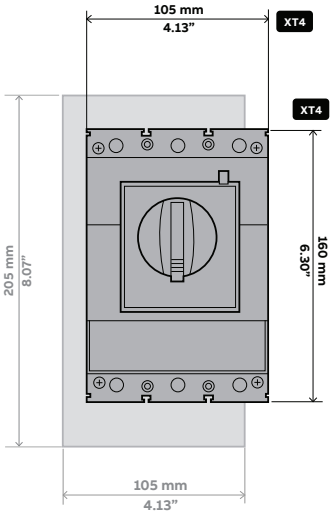

T4/XT4 FRAME SIZE FRONT COMPARISON

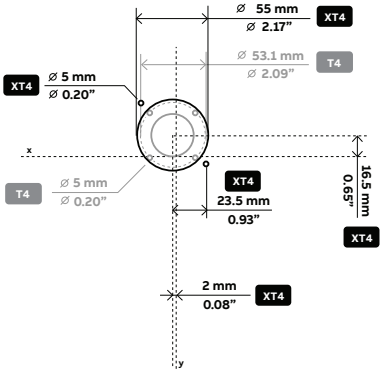

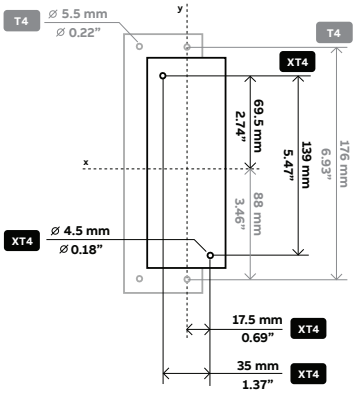

T5 VS XT5

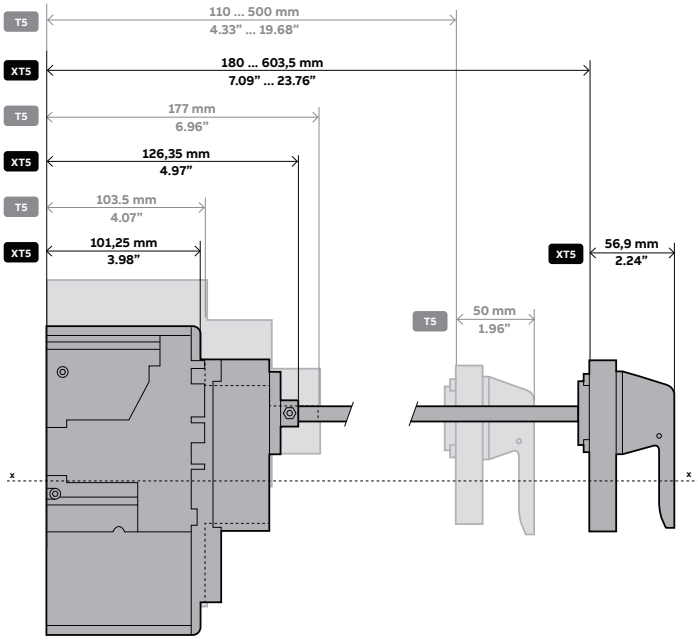

T5/XT5 FRAME SIZE DEPTH COMPARISON

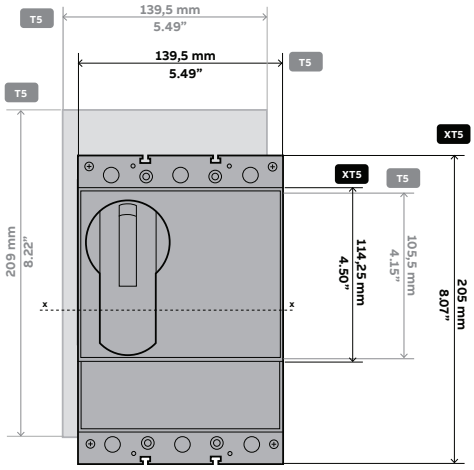

T5/XT5 FRAME SIZE FRONT COMPARISON

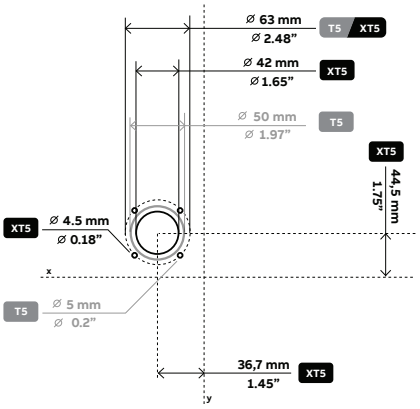

T5/XT5 FRAME SIZE DEPTH ALIGNED CENTERS

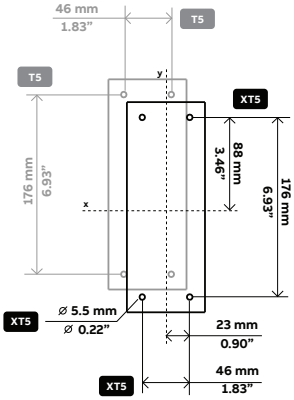

T6 VS XT6

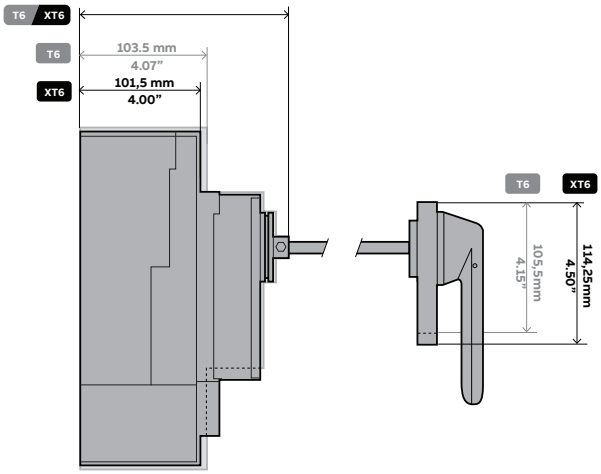

T6/XT6 FRAME SIZE DEPTH COMPARISON

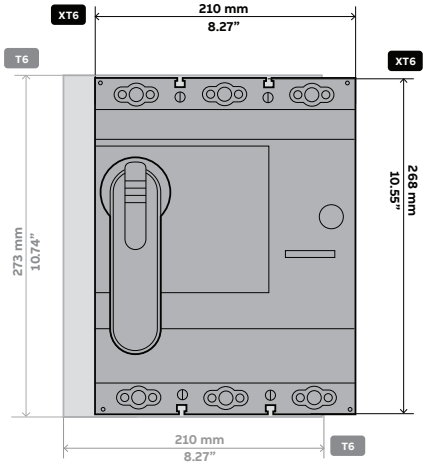

T6/XT6 FRAME SIZE FRONT COMPARISON

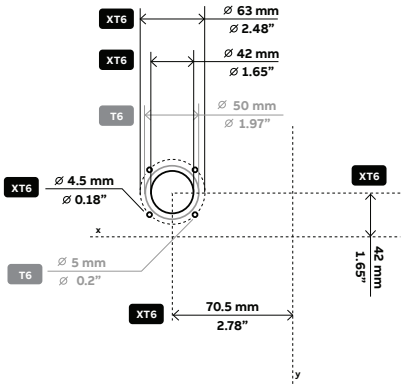

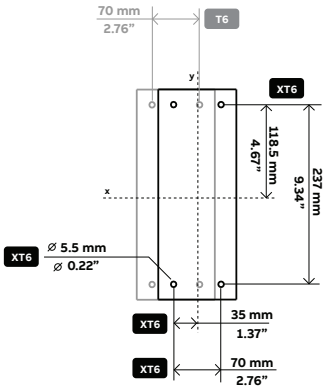

T7 VS XT7

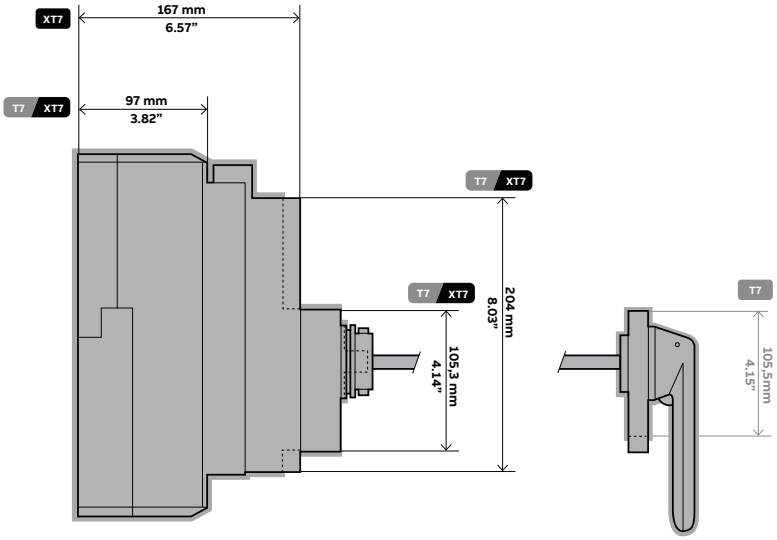

T7/XT7 FRAME SIZE DEPTH COMPARISON

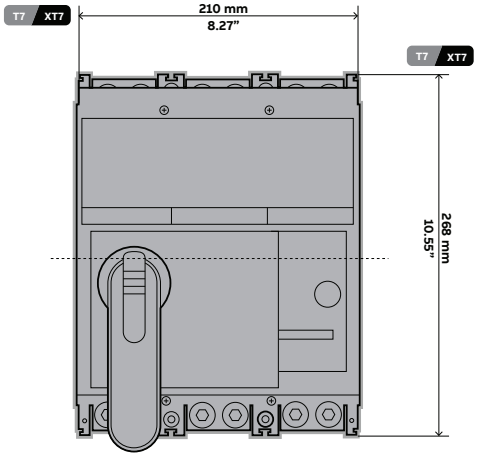

T7/XT7 FRAME SIZE FRONT COMPARISON

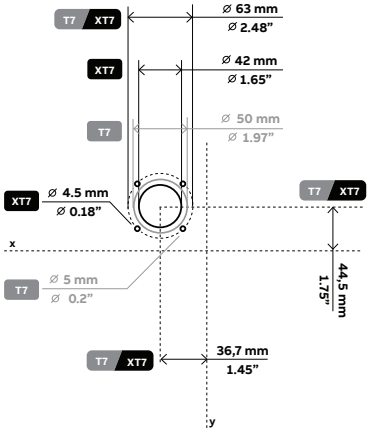

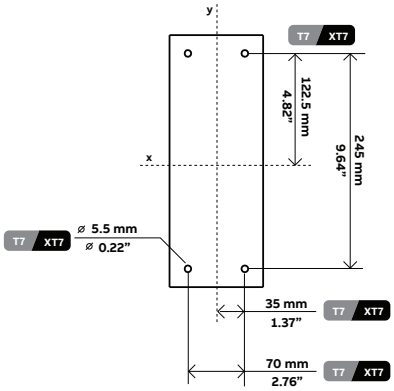

T7M VS XT7M

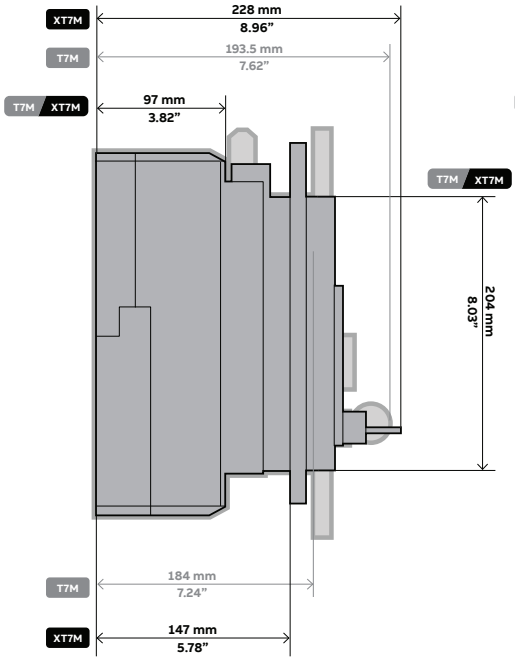

T7M/XT7M FRAME SIZE DEPTH COMPARISON

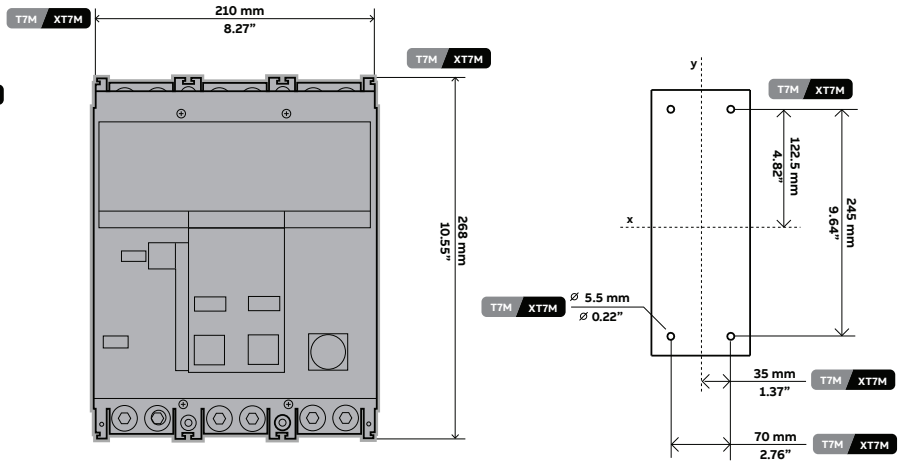

T7M/XT7M FRAME SIZE FRONT COMPARISON

T6 VS XT5

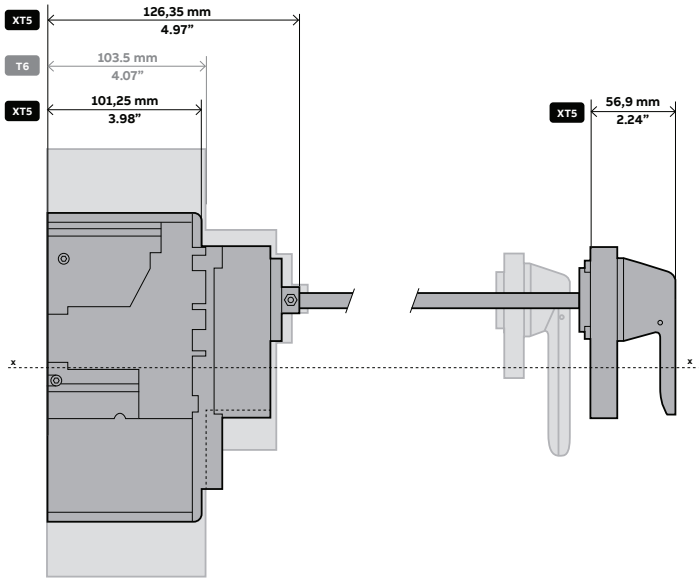

T6/XT5 FRAME SIZE DEPTH COMPARISON

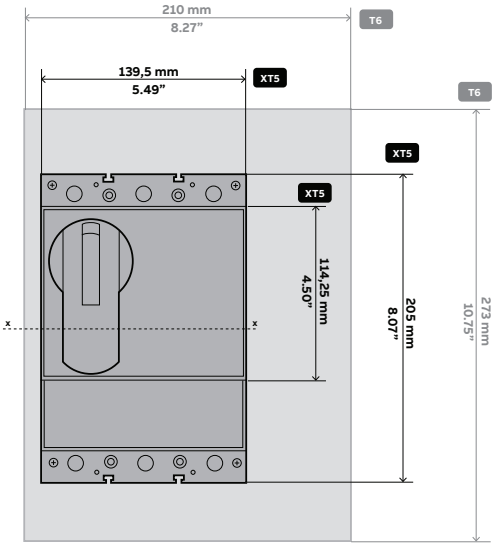

T6/XT5 FRAME SIZE FRONT COMPARISON

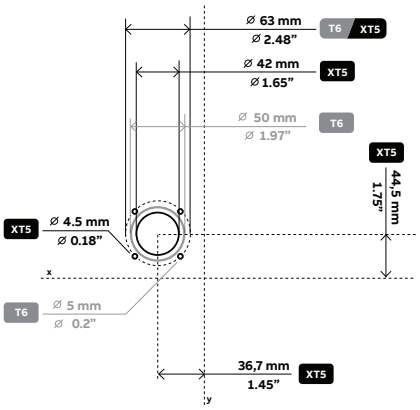

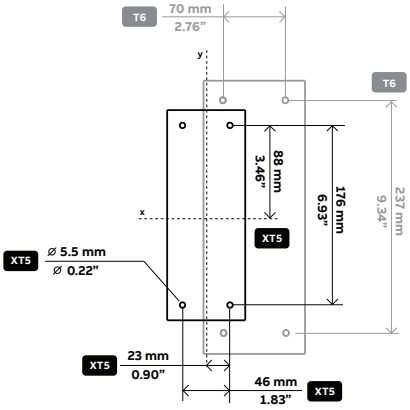

T6 VS XT7

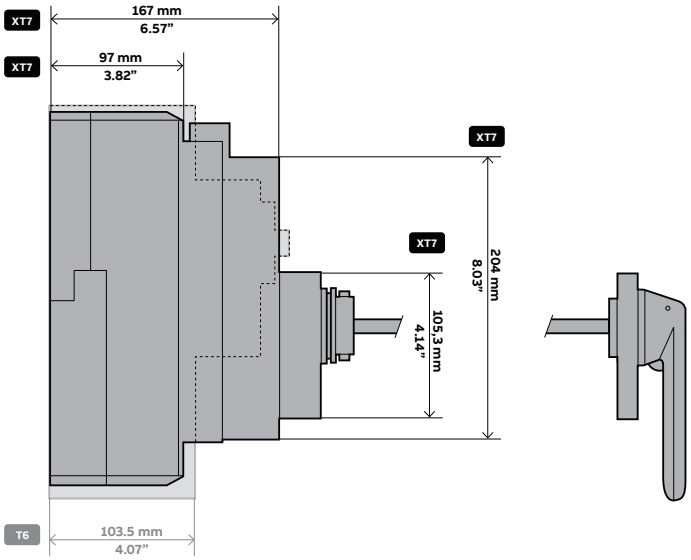

T6/XT7 FRAME SIZE DEPTH COMPARISON

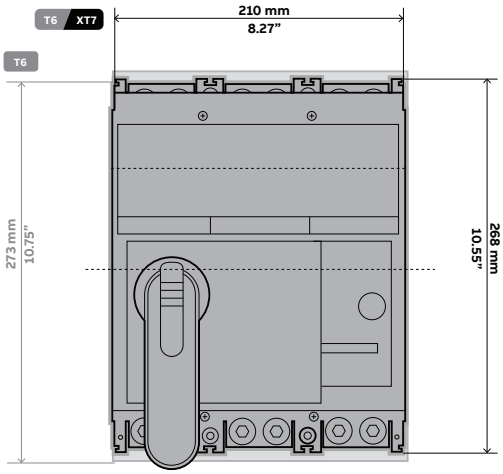

T6/XT7 FRAME SIZE FRONT COMPARISON

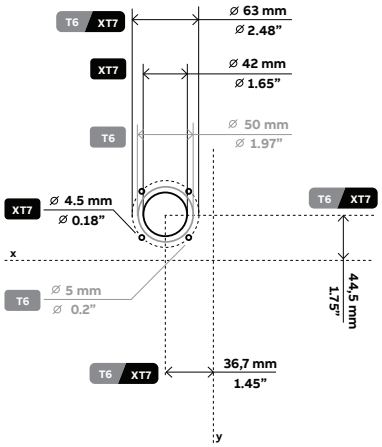

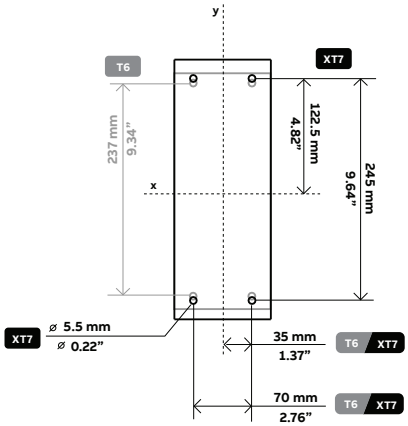

—

ABB Inc.
Electrification
305 Gregson Dr
Cary, NC 27511

Customer service: +1 800 431 7867
7:00 a.m. - 5:30 p.m. CT, Monday-Friday
Distributors: us-el.distributorsales@abb.com
All other customers: us-el.oemsales@abb.com

Technical support: +1 888 385 1221, option 1
7:00 a.m. - 5:00 p.m. CT, Monday-Friday
eppc.support@us.abb.com

electrification.us.abb.com

©2022 ABB. All rights reserved.
Specifications subject to change without notice.

1SXU210253G0201 REV B FEB 2022