# Technical reference manual

## Protect$^{IT}$ Line distance protection terminal
## REL 501*2.5

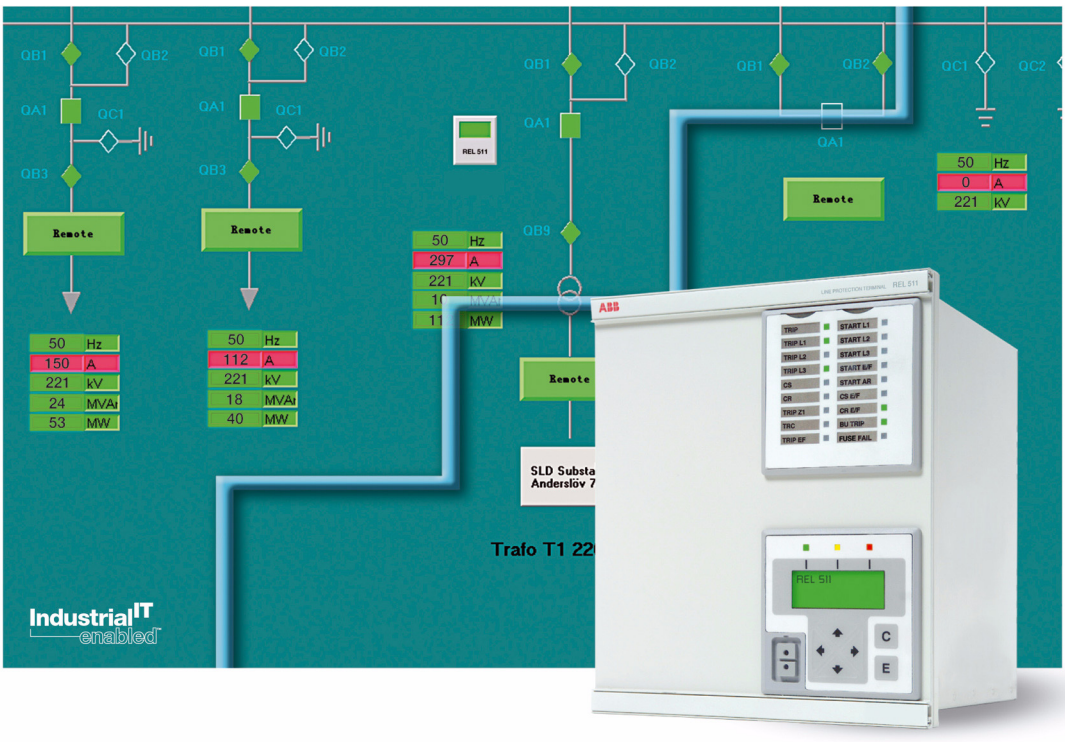

# Technical reference manual

## Line distance protection terminal
## REL 501*2.5

**About this manual**

Document No: 1MRK 506 161-UEN
Issued: December 2006
Revision: C

© Copyright 2006 ABB. All rights reserved.

**COPYRIGHT**

**WE RESERVE ALL RIGHTS TO THIS DOCUMENT, EVEN IN THE EVENT THAT A PATENT IS ISSUED AND A DIFFERENT COMMERCIAL PROPRIETARY RIGHT IS REGISTERED. IMPROPER USE, IN PARTICULAR REPRODUCTION AND DISSEMINATION TO THIRD PARTIES, IS NOT PERMITTED.**

**THIS DOCUMENT HAS BEEN CAREFULLY CHECKED. HOWEVER, IN CASE ANY ERRORS ARE DETECTED, THE READER IS KINDLY REQUESTED TO NOTIFY THE MANUFACTURER AT THE ADDRESS BELOW.**

**THE DATA CONTAINED IN THIS MANUAL IS INTENDED SOLELY FOR THE CONCEPT OR PRODUCT DESCRIPTION AND IS NOT TO BE DEEMED TO BE A STATEMENT OF GUARANTEED PROPERTIES. IN THE INTERESTS OF OUR CUSTOMERS, WE CONSTANTLY SEEK TO ENSURE THAT OUR PRODUCTS ARE DEVELOPED TO THE LATEST TECHNOLOGICAL STANDARDS. AS A RESULT, IT IS POSSIBLE THAT THERE MAY BE SOME DIFFERENCES BETWEEN THE HW/SW PRODUCT AND THIS INFORMATION PRODUCT.**

**Manufacturer:**

ABB Power Technologies AB
Substation Automation Products
SE-721 59 Västerås
Sweden
Telephone: +46 (0) 21 34 20 00
Facsimile: +46 (0) 21 14 69 18
www.abb.com/substationautomation

# Contents

## Chapter Page


**Chapter 1 Introduction ..... 1**

Introduction to the technical reference manual ..... 2
About the complete set of manuals for a terminal ..... 2
Design of the Technical reference manual (TRM) ..... 2
Intended audience ..... 6
General ..... 6
Requirements ..... 6
Related documents ..... 6
Revision notes ..... 6
Acronyms and abbreviations ..... 6

**Chapter 2 General ..... 15**

Terminal identification rated and base values ..... 16
General terminal parameters ..... 16
Basic protection parameters ..... 16
Calendar and clock ..... 20
Technical data ..... 21
Case dimensions ..... 21
Weight ..... 26
Unit ..... 26
Power consumption ..... 26
Environmental properties ..... 26

**Chapter 3 Common functions ..... 29**

Real-time clock with external time synchronization (TIME) ..... 30
Application ..... 30
Function block ..... 30
Input and output signals ..... 30
Setting parameters ..... 30
Technical data ..... 31
Four parameter setting groups (GRP) ..... 32
Application ..... 32
Logic diagram ..... 32
Function block ..... 32
Input and output signals ..... 33
Setting restriction of HMI (SRH) ..... 34
Application ..... 34
Functionality ..... 34
Logic diagram ..... 35
Input and output signals ..... 35
Setting parameters ..... 35
I/O system configurator ..... 36

# Contents


Application ..... 36
Logic diagram ..... 36
Function block ..... 37
Input and output signals ..... 37
Self supervision with internal event recorder (INT) ..... 38
Application ..... 38
Function block ..... 38
Logic diagram ..... 39
Input and output signals ..... 40
Technical data ..... 41
Configurable logic blocks (CL1) ..... 42
Application ..... 42
Inverter function block (INV) ..... 42
OR function block (OR) ..... 42
AND function block (AND) ..... 43
Timer function block (TM) ..... 44
Setting parameters ..... 44
Timer long function block (TL) ..... 44
Setting parameters ..... 45
Pulse timer function block (TP) ..... 45
Setting parameters ..... 46
Extended length pulse function block (TQ) ..... 46
Setting parameters ..... 46
Exclusive OR function block (XO) ..... 47
Set-reset function block (SR) ..... 47
Set-reset with memory function block (SM) ..... 48
Controllable gate function block (GT) ..... 48
Setting parameters ..... 49
Settable timer function block (TS) ..... 49
Setting parameters ..... 50
Move first function block (MOF) ..... 50
Function block ..... 50
Move last function block (MOL) ..... 51
Technical data ..... 52
Blocking of signals during test (BST) ..... 53
Application ..... 53
Function block ..... 53
Input and output signals ..... 53

**Chapter 4 Line distance ..... 55**

Distance protection (ZM) ..... 56
Application ..... 56
Functionality ..... 58
Function block, zone 1- 3 ..... 59
Function block, zone 4 ..... 60
Function block, zone 5 ..... 61
Logic diagram ..... 61
Input and output signals, zone 1-3 ..... 63
Input and output signals, zone 4 ..... 64
Input and output signals, zone 5 ..... 65

# Contents


Setting parameters, general ..... 65
Setting parameters, zone 1-3 ..... 65
Setting parameters, zone 4 ..... 66
Setting parameters, zone 5 ..... 67
Setting parameters, directional measuring element ..... 69
Technical data ..... 69
Automatic switch onto fault logic (SOTF) ..... 71
Application ..... 71
Functionality ..... 71
Function block ..... 71
Logic diagram ..... 72
Input and output signals ..... 72
Setting parameters ..... 72
Technical data ..... 73
Local acceleration logic (ZCLC) ..... 74
Application ..... 74
Functionality ..... 74
Function block ..... 74
Logic diagram ..... 75
Input and output signals ..... 75
Setting parameters ..... 76
General fault criteria (GFC) ..... 77
Application ..... 77
Functionality ..... 77
Function block ..... 79
Logic diagram ..... 79
Input and output signals ..... 85
Setting parameters ..... 86
Technical data ..... 88
Radial feeder protection (PAP) ..... 90
Application ..... 90
Functionality ..... 90
Function block ..... 90
Logic diagram, phase selection function ..... 91
Logic diagram, residual current measurement ..... 91
Logic diagram, fast fault clearing ..... 92
Logic diagram, delayed fault clearing ..... 93
Logic diagram, residual current detection ..... 93
Logic diagram, trip and autorecloser start logic ..... 94
Input and output signals ..... 94
Setting parameters ..... 95
Technical data ..... 96

**Chapter 5 Current ..... 97**

Instantaneous non-directional overcurrent protection (IOC) ..... 98
Application ..... 98
Functionality ..... 98
Function block ..... 98
Logic diagram ..... 100
Input and output signals ..... 100

# Contents


Setting parameters ..... 101
Technical data ..... 101
Definite time non-directional overcurrent protection (TOC) ..... 102
Application ..... 102
Functionality ..... 102
Function block ..... 103
Logic diagram ..... 104
Input and output signals ..... 104
Setting parameters ..... 105
Technical data ..... 105
Two step time delayed non-directional phase overcurrent protection (TOC2) ..... 106
Application ..... 106
Functionality ..... 106
Function block ..... 106
Logic diagram ..... 107
Input and output signals ..... 107
Setting parameters ..... 108
Technical data ..... 109
Two step time delayed directional phase overcurrent protection (TOC3) ..... 110
Application ..... 110
Functionality ..... 110
Function block ..... 110
Logic diagram ..... 111
Input and output signals ..... 114
Setting parameters ..... 115
Technical data ..... 116
Time delayed residual overcurrent protection (TEF) ..... 118
Application ..... 118
Functionality ..... 118
Function block ..... 119
Logic diagram ..... 120
Input and output signals ..... 120
Setting parameters ..... 121
Technical data ..... 122
Four step time delayed directional residual overcurrent protection (EF4) ..... 123
Application ..... 123
Functionality ..... 123
Function block ..... 124
Logic diagram ..... 124
Input and output signals ..... 126
Setting parameters ..... 126
Technical data ..... 128
Sensitive directional residual overcurrent protection (WEF1) ..... 130
Application ..... 130
Functionality ..... 130
Function block ..... 130
Logic diagram ..... 131
Input and output signals ..... 131
Setting parameters ..... 132
Technical data ..... 133

# Contents


Sensitive directional residual power protection (WEF2) ..... 134
Application ..... 134
Functionality ..... 134
Function block ..... 134
Logic diagram ..... 135
Input and output signals ..... 135
Setting parameters ..... 136
Technical data ..... 137
Scheme communication logic for residual overcurrent protection (EFC) ..... 138
Application ..... 138
Functionality ..... 138
Function block ..... 138
Logic diagram ..... 139
Input and output signals ..... 139
Setting parameters ..... 140
Technical data ..... 140
Current reversal and weak end infeed logic for residual overcurrent protection (EFCA) ..... 141
Application ..... 141
Design ..... 141
Function block ..... 141
Logic diagram ..... 142
Input and output signals ..... 143
Setting parameters ..... 143
Technical data ..... 144
Thermal phase overload protection (THOL) ..... 145
Application ..... 145
Functionality ..... 145
Function block ..... 145
Logic diagram ..... 146
Input and output signals ..... 146
Setting parameters ..... 146
Technical data ..... 148
Breaker failure protection (BFP) ..... 149
Application ..... 149
Design ..... 149
Function block ..... 149
Logic diagram ..... 150
Input and output signals ..... 150
Setting parameters ..... 151
Technical data ..... 151

**Chapter 6 Voltage ..... 153**

Time delayed undervoltage protection (TUV) ..... 154
Application ..... 154
Function block ..... 154
Logic diagram ..... 155
Input and output signals ..... 155
Setting parameters ..... 156

# Contents


Technical data ..... 156
Time delayed overvoltage protection (TOV) ..... 157
Application ..... 157
Functionality ..... 157
Function block ..... 157
Logic diagram ..... 158
Input and output signals ..... 158
Setting parameters ..... 159
Technical data ..... 159

**Chapter 7 Power system supervision ..... 161**

Broken conductor check (BRC) ..... 162
Application ..... 162
Functionality ..... 162
Function block ..... 162
Logic diagram ..... 163
Input and output signals ..... 163
Setting parameters ..... 163
Technical data ..... 164
Loss of voltage check (LOV) ..... 165
Application ..... 165
Functionality ..... 165
Function block ..... 165
Logic diagram ..... 166
Input and output signals ..... 166
Setting parameters ..... 167
Technical data ..... 167
Overload supervision (OVLD) ..... 168
Application ..... 168
Functionality ..... 168
Function block ..... 168
Logic diagram ..... 169
Input and output signals ..... 169
Setting parameters ..... 169
Technical data ..... 170
Dead line detection (DLD) ..... 171
Application ..... 171
Functionality ..... 171
Function block ..... 171
Logic diagram ..... 172
Input and output signals ..... 172
Setting parameters ..... 173
Technical data ..... 173

**Chapter 8 Secondary system supervision ..... 175**

Current circuit supervision, current based (CTSU) ..... 176
Application ..... 176
Functionality ..... 176

# Contents


Function block ..... 176
Logic diagram ..... 177
Input and output signals ..... 177
Setting parameters ..... 177
Technical data ..... 178
Fuse failure supervision (FUSE) ..... 179
Application ..... 179
Functionality ..... 179
Function block ..... 180
Logic diagram ..... 181
Input and output signals ..... 183
Setting parameters ..... 184
Technical data ..... 185
Voltage transformer supervision (TCT) ..... 186
Application ..... 186
Functionality ..... 186
Function block ..... 186
Logic diagram ..... 186
Input and output signals ..... 187
Setting parameters ..... 187
Technical data ..... 187

**Chapter 9 Control ..... 189**

Synchrocheck and energizing check (SYN) ..... 190
Application ..... 190
Functionality ..... 190
Single breaker ..... 190
Function block ..... 191
Logic diagram ..... 193
Input and output signals ..... 195
Setting parameters ..... 198
Technical data ..... 202
Autorecloser (AR) ..... 204
Application ..... 204
Functionality ..... 204
Function block ..... 205
Logic diagram ..... 205
Input and output signals ..... 210
Autorecloser counter values ..... 212
Setting parameters ..... 212
Technical data ..... 214
Single command, 16 signals (CD) ..... 216
Application ..... 216
Functionality ..... 216
Function block ..... 216
Input and output signals ..... 217
Setting parameters ..... 217
Multiple command (CM) ..... 218
Application ..... 218
Functionality ..... 218

# Contents


Function block ..... 218
Input and output signals ..... 219
Setting parameters ..... 219

**Chapter 10 Logic ..... 221**

Tripping logic (TR) ..... 222
Application ..... 222
Functionality ..... 222
Input and output signals ..... 222
Setting parameters ..... 222
Technical data ..... 223
Pole discordance logic (PDc) ..... 224
Application ..... 224
Functionality ..... 224
Function block ..... 224
Logic diagram ..... 225
Input and output signals ..... 225
Setting parameters ..... 225
Technical data ..... 226
High speed binary output logic (HSBO) ..... 227
Application ..... 227
Functionality ..... 227
Function block ..... 227
Logic diagram ..... 228
Input and output signals ..... 229
Setting parameters ..... 230
Communication channel test logic (CCHT) ..... 231
Application ..... 231
Functionality ..... 231
Function block ..... 231
Logic diagram ..... 232
Input and output signals ..... 232
Setting parameters ..... 233
Technical data ..... 233
Binary signal transfer to remote end (RTC12) ..... 234
General ..... 234
Application ..... 234
Functionality ..... 234
Function block ..... 235
Input and output signals ..... 236
Setting parameters ..... 236
Event function (EV) ..... 237
Application ..... 237
Design ..... 237
Function block ..... 238
Input and output signals ..... 239
Setting parameters ..... 239
Event counter (CN) ..... 241
Application ..... 241
Design ..... 241

Function block ..... 241
Input and output signals ..... 241
Setting parameters ..... 241
Technical data ..... 242

**Chapter 11 Monitoring ..... 243**

Disturbance report (DRP) ..... 244
Application ..... 244
Requirement of trig condition for disturbance report ..... 244
Functionality ..... 244
Function block ..... 246
Input and output signals ..... 247
Setting parameters ..... 247
Technical data ..... 249
Indications ..... 250
Application ..... 250
Functionality ..... 250
Disturbance recorder (DR) ..... 251
Application ..... 251
Functionality ..... 251
Technical data ..... 252
Event recorder (ER) ..... 253
Application ..... 253
Design ..... 253
Technical data ..... 253
Fault locator (FLOC) ..... 254
Application ..... 254
Functionality ..... 254
Function block ..... 254
Input and output signals ..... 255
Setting parameters ..... 255
Technical data ..... 256
Trip value recorder (TVR) ..... 257
Application ..... 257
Design ..... 257
Supervision of AC input quantities (DA) ..... 258
Application ..... 258
Functionality ..... 258
Function block ..... 258
Input and output signals ..... 259
Setting parameters ..... 259
Technical data ..... 267
Increased accuracy of AC input quantities (IMA) ..... 268
Application ..... 268
Functionality ..... 268
Technical data ..... 268
Supervision of mA input quantities (MI) ..... 269
Application ..... 269
Functionality ..... 269
Function block ..... 269

# Contents


Input and output signals ..... 269
Setting parameters ..... 270
Setting table for a generic mA input module MIM ..... 270
Technical data ..... 272

**Chapter 12 Metering ..... 273**

Pulse counter logic for metering (PC) ..... 274
Application ..... 274
Design ..... 274
Function block ..... 274
Input and output signals ..... 274
Setting parameters ..... 275
Technical data ..... 275

**Chapter 13 System protection and control functions ..... 277**

Pole slip protection (PSP) ..... 278
Application ..... 278
Functionality ..... 278
Function block ..... 279
Logic diagram ..... 279
Input and output signals ..... 287
Setting parameters ..... 287
Technical data ..... 290
Low active power protection (LAPP) ..... 291
Application ..... 291
Functionality ..... 291
Function block ..... 291
Logic diagram ..... 292
Input and output signals ..... 293
Setting parameters ..... 293
Technical data ..... 294
Low active and reactive power protection (LARP) ..... 295
Application ..... 295
Functionality ..... 295
Function block ..... 295
Logic diagram ..... 296
Input and output signals ..... 297
Setting parameters ..... 297
Technical data ..... 298
High active power protection (HAPP) ..... 299
Application ..... 299
Functionality ..... 299
Function block ..... 300
Logic diagram ..... 301
Input and output signals ..... 302
Setting parameters ..... 302
Technical data ..... 303
High active and reactive power protection (HARP) ..... 304

# Contents


Application ..... 304
Functionality ..... 304
Function block ..... 304
Logic diagram ..... 305
Input and output signals ..... 306
Setting parameters ..... 306
Technical data ..... 307
Sudden change in phase current protection function (SCC1) ..... 308
Application ..... 308
Functionality ..... 308
Function block ..... 308
Logic diagram ..... 309
Input and output signals ..... 309
Setting parameters ..... 310
Technical data ..... 310
Sudden change in residual current protection function (SCRC) ..... 311
Application ..... 311
Functionality ..... 311
Function block ..... 311
Logic diagram ..... 312
Input and output signals ..... 312
Setting parameters ..... 313
Technical data ..... 313
Sudden change in voltage protection function (SCV) ..... 314
Application ..... 314
Functionality ..... 314
Function block ..... 314
Logic diagram ..... 315
Input and output signals ..... 315
Setting parameters ..... 316
Technical data ..... 316
Overvoltage protection (OVP) ..... 317
Application ..... 317
Functionality ..... 317
Function block ..... 317
Logic diagram ..... 318
Input and output signals ..... 319
Setting parameters ..... 319
Technical data ..... 320
Accurate undercurrent protection function (UCP) ..... 321
Application ..... 321
Functionality ..... 321
Function block ..... 321
Logic diagram ..... 322
Input and output signals ..... 322
Setting parameters ..... 323
Technical data ..... 323
Phase overcurrent protection (OCP) ..... 324
Application ..... 324
Functionality ..... 324
Function block ..... 324
Logic diagram ..... 325
Input and output ..... 326

# Contents


Setting parameters ..... 326
Technical data ..... 326
Residual overcurrent protection (ROCP) ..... 327
Application ..... 327
Functionality ..... 327
Function block ..... 327
Logic diagram ..... 328
Input and output signals ..... 328
Setting parameters ..... 329
Tecnical data ..... 329

**Chapter 14 Data communication ..... 331**

Remote end data communication ..... 332
Application ..... 332
Setting parameters ..... 332
Fibre optical module ..... 332
Application ..... 332
Technical data ..... 333
Galvanic interface ..... 333
Application ..... 333
Technical data ..... 333
Short range galvanic module ..... 334
Application ..... 334
Technical data ..... 334
Short range fibre optical module ..... 334
Application ..... 334
Technical data ..... 335
Co-directional G. 703 galvanic interface ..... 335
Application ..... 335
Carrier module ..... 335
Application ..... 335
Design ..... 335
Serial communication ..... 337
Application, common ..... 337
Design, common ..... 337
Setting parameters ..... 338
Serial communication, SPA ..... 338
Application ..... 338
Design ..... 338
Setting parameters ..... 339
Technical data ..... 339
Serial communication, IEC (IEC 60870-5-103 protocol) ..... 340
Application ..... 340
Design ..... 340
IEC 60870-5-103 ..... 341
Function block ..... 346
Input and output signals ..... 346
Setting parameters ..... 347
Technical data ..... 348
Serial communication, LON ..... 349

# Contents


Application ..... 349
Design ..... 349
Setting parameters ..... 349
Technical data ..... 350
Serial communication modules (SCM) ..... 350
Design, SPA/IEC ..... 350
Design, LON ..... 351
Technical data ..... 351

**Chapter 15 Hardware modules ..... 353**

Modules ..... 354
A/D module (ADM) ..... 355
Design ..... 355
Transformer module (TRM) ..... 356
Design ..... 356
Technical data ..... 356
Binary I/O capabilities ..... 358
Application ..... 358
Design ..... 358
Technical data ..... 358
Binary input module (BIM) ..... 360
Application ..... 360
Design ..... 360
Function block ..... 360
Input and output signals ..... 360
Binary output module (BOM) ..... 362
Application ..... 362
Design ..... 362
Function block ..... 363
Input and output signals ..... 363
I/O module (IOM) ..... 364
Application ..... 364
Design ..... 364
Function block ..... 364
Input and output signals ..... 365
mA input module (MIM) ..... 366
Application ..... 366
Design ..... 366
Function block ..... 366
Technical data ..... 366
Power supply module (PSM) ..... 367
Application ..... 367
Design ..... 367
Function block ..... 367
Input and output signals ..... 367
Technical data ..... 368
Local LCD human machine interface (LCD-HMI) ..... 369
Application ..... 369
Design ..... 369
18 LED indication module (LED-HMI) ..... 371

# Contents


Application ..... 371
Functionality ..... 371
LED indication function (HL,HLED) ..... 372
Application ..... 372
Design ..... 372
Function block ..... 372
Input and output signals ..... 372
Setting parameters ..... 373
Optical receiver module (ORM) ..... 374
Application ..... 374
Design ..... 374
Logic diagram ..... 374
Setting parameters ..... 383
Technical data ..... 383
Serial communication modules (SCM) ..... 384
SPA/IEC ..... 384
LON ..... 384
Data communication modules (DCM) ..... 385

**Chapter 16 Diagrams ..... 387**

Terminal diagrams ..... 388
Terminal diagram, Rex5xx ..... 388
Terminal diagram, Rex5xx ..... 390

# Chapter 1 Introduction

### About this chapter

This chapter introduces you to the manual as such.

# 1 Introduction to the technical reference manual

## 1.1 About the complete set of manuals for a terminal

The users manual (UM) is a complete set of four different manuals:

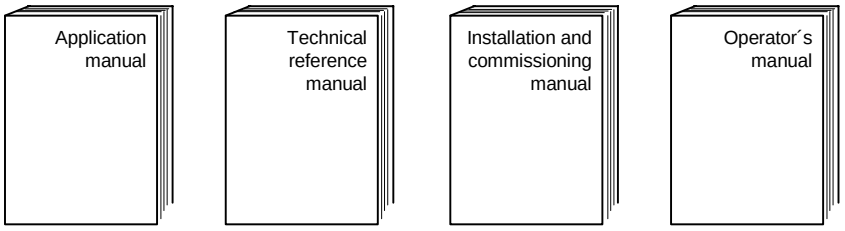


**The Application Manual (AM)** contains descriptions, such as application and functionality descriptions as well as setting calculation examples sorted per function. The application manual should be used when designing and engineering the protection terminal to find out when and for what a typical protection function could be used. The manual should also be used when calculating settings and creating configurations.

**The Technical Reference Manual (TRM)** contains technical descriptions, such as function blocks, logic diagrams, input and output signals, setting parameter tables and technical data sorted per function. The technical reference manual should be used as a technical reference during the engineering phase, installation and commissioning phase, and during the normal service phase.

**The Operator's Manual (OM)** contains instructions on how to operate the protection terminal during normal service (after commissioning and before periodic maintenance tests). The operator's manual can be used to find out how to handle disturbances or how to view calculated and measured network data in order to determine the cause of a fault.

**The Installation and Commissioning Manual (ICM)** contains instructions on how to install and commission the protection terminal. The manual can also be used as a reference if a periodic test is performed. The manual covers procedures for mechanical and electrical installation, energizing and checking of external circuitry, setting and configuration as well as verifying settings and performing a directional test. The chapters and sections are organized in the chronological order (indicated by chapter/section numbers) in which the protection terminal should be installed and commissioned.

## 1.2 Design of the Technical reference manual (TRM)

The description of each terminal related function follows the same structure (where applicable):

### Application

States the most important reasons for the implementation of a particular protection function.

### Functionality/Design

Presents the general concept of a function.

### Function block

Each function block is imaged by a graphical symbol.

Input signals are always on the left side, and output signals on the right side. Settings are not displayed. A special kind of settings are sometimes available. These are supposed to be connected to constants in the configuration scheme, and are therefore depicted as inputs. Such signals will be found in the signal list but described in the settings table.

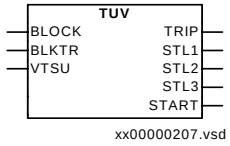


*Figure 1: Function block symbol example*

### Logic diagram

The description of the design is chiefly based on simplified logic diagrams, which use IEC symbols, for the presentation of different functions, conditions etc. The functions are presented as a closed block with the most important internal logic circuits and configurable functional inputs and outputs.

Completely configurable binary inputs/outputs and functional inputs/outputs enable the user to prepare the REx 5xx with his own configuration of different functions, according to application needs and standard practice.

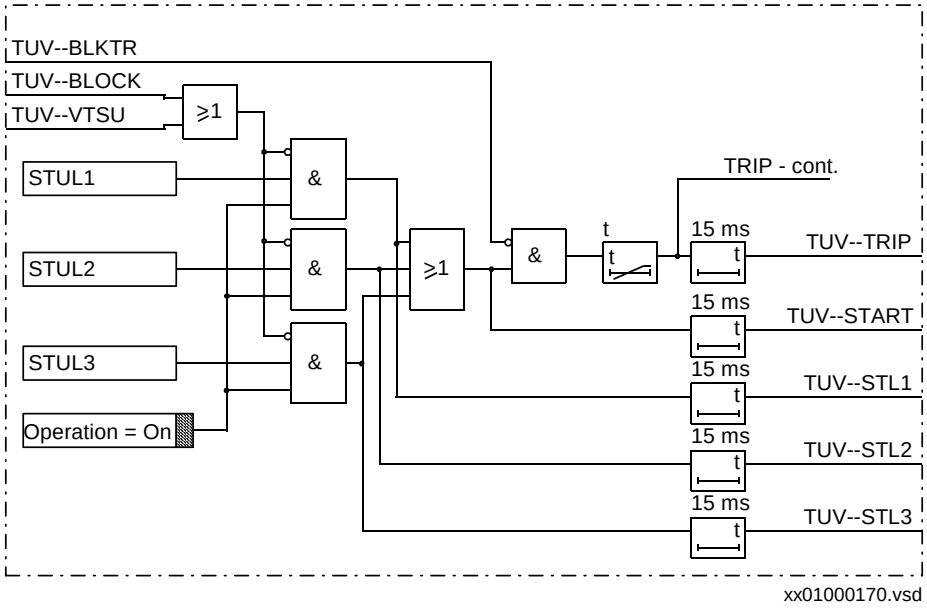


*Figure 2: Simplified logic diagram example*

The names of the configurable logic signals consist of two parts divided by dashes. The first part consists of up to four letters and presents the abbreviated name for the corresponding function. The second part presents the functionality of the particular signal. According to this explanation, the meaning of the signal TUV--BLKTR is as follows.

- The first part of the signal, TUV- represents the adherence to the Time delayed Under-Voltage function.
- The second part of the signal name, BLKTR informs the user that the signal will BLocK the TRip from the under-voltage function, when its value is a logical one (1).

Different binary signals have special symbols with the following significance:

- Signals drawn to the box frame to the left present functional input signals. It is possible to configure them to functional output signals of other functions as well as to binary input terminals of the REx 5xx terminal. Examples are TUV--BLK-TR, TUV--BLOCK and TUV--VTSU. Signals in frames with a shaded area on their right side present the logical setting signals. Their values are high (1) only when the corresponding setting parameter is set to the symbolic value specified within the frame. Example is the signal Operation = On. These signals are not configurable. Their logical values correspond automatically to the selected set-ting value.The internal signals are usually dedicated to a certain function. They are normally not available for configuration purposes. Examples are signals STUL1, STUL2 and STUL3.The functional output signals, drawn to the box frame to the right, present the logical outputs of functions and are available for

configuration purposes. The user can configure them to binary outputs from the terminal or to inputs of different functions. Typical examples are signals TUV--TRIP, TUV--START etc.

Other internal signals configurated to other function blocks are written on a line with an identity and a cont. reference. An example is the signal TRIP - cont. The signal can be found in the corresponding function with the same identity.

### Input and output signals

The signal lists contain all available input and output signals of the function block, one table for input signals and one for output signals.

**Table 1: Input signals for the TUV (TUV--) function block**

| Signal | Description |
|---|---|
| BLOCK | Block undervoltage function |
| BLKTR | Block of trip from time delayed undervoltage function |
| VTSU | Block from voltage transformer circuit supervision |

**Table 2: Output signals for the TUV (TUV--) function block**

| Signal | Description |
|---|---|
| TRIP | Trip by time delayed undervoltage function |
| STL1 | Start phase undervoltage phase L1 |
| STL2 | Start phase undervoltage phase L2 |
| STL3 | Start phase undervoltage phase L3 |
| START | Start phase undervoltage |

### Setting parameters

The setting parameters table contains all available settings of the function block. If a function consists of more than one block, each block is listed in a separate table.

**Table 3: Setting parameters for the time delayed undervoltage protection TUV (TUV--) function**

| Parameter | Range | Step | Default | Unit | Description |
|---|---|---|---|---|---|
| Operation | Off, On | | Off | - | Operating mode for TUV function |
| UPE< | 10-100 | 1 | 70 | % of U1b | Operate phase voltage |
| t | 0.000-60.000 | 0.001 | 0.000 | s | Time delay |

### Technical data

The technical data specifies the terminal in general, the functions and the hardware modules.

## 1.3 Intended audience

### 1.3.1 General

This manual addresses system engineers, installation and commissioning personnel, who use technical data during engineering , installation and commissioning, and in normal service.

### 1.3.2 Requirements

The system engineer must have a thorough knowledge of protection systems, protection equipment, protection functions and the configured functional logics in the protective devices. The installation and commissioning personnel must have a basic knowledge in the handling electronic equipment.

## 1.4 Related documents

| Documents related to REL 501*2.5 | Identity number |
|---|---|
| Operator's manual | 1MRK 506 160-UEN |
| Installation and commissioning manual | 1MRK 506 162-UEN |
| Technical reference manual | 1MRK 506 161-UEN |
| Application manual | 1MRK 506 163-UEN |
| Buyer's guide | 1MRK 506 159-BEN |

## 1.5 Revision notes

| Revision | Description |
|---|---|
| | |

## 1.6 Acronyms and abbreviations

| | |
|---|---|
| **AC** | Alternating Current |
| **ACrv2** | Setting A for programmable overvoltage IDMT curve, step 2 |
| **A/D converter** | Analog to Digital converter |
| **ADBS** | Amplitude dead-band supervision |
| **AIM** | Analog input module |
| **ANSI** | American National Standards Institute |
| **ASCT** | Auxiliary summation current transformer |
| **ASD** | Adaptive Signal Detection |
| **AWG** | American Wire Gauge standard |
| **BIM** | Binary input module |

| | |
|---|---|
| **BLKDEL** | Block of delayed fault clearing |
| **BOM** | Binary output module |
| **BR** | Binary transfer receive over LDCM |
| **BS** | British Standard |
| **BSR** | Binary Signal Receive (SMT) over LDCM |
| **BST** | Binary Signal Transmit (SMT) over LDCM |
| **BT** | Binary Transfer Transmit over LDCM |
| **C34.97** | |
| **CAN** | Controller Area Network. ISO standard (ISO 11898) for serial communication |
| **CAP 531** | Configuration and programming tool |
| **CB** | Circuit breaker |
| **CBM** | Combined backplane module |
| **CCITT** | Consultative Committee for International Telegraph and Telephony. A United Nations sponsored standards body within the International Telecommunications Union. |
| **CCS** | Current circuit supervision |
| **CEM** | Controller area network emulation module |
| **CIM** | Communication interface module |
| **CMPPS** | Combined Mega Pulses Per Second |
| **CO cycle** | Close-Open cycle |
| **Co-directional** | Way of transmitting G.703 over a balanced line. Involves two twisted pairs making it possible to transmit information in both directions |
| **Contra-directional** | Way of transmitting G.703 over a balanced line. Involves four twisted pairs of with two are used for transmitting data in both directions, and two pairs for transmitting clock signals |
| **CPU** | Central Processor Unit |
| **CR** | Carrier Receive |
| **CRC** | Cyclic Redundancy Check |
| **CRL** | POR carrier for WEI logic |
| **CS** | Carrier send |
| **CT** | Current transformer |
| **CT1L1** | Input to be used for transmit CT group 1line L1 in signal matrix tool |
| **CT1L1NAM** | Signal name for CT-group 1line L1 in signal matrix tool |
| **CT2L3** | Input to be used for transmission of CT-group 2 line L3 to remote end |
| **CT2N** | Input to be used for transmission of CT-group 2 neutral N to remote end. |
| | |
| **CVT** | Capacitive voltage transformer |

| | |
|---|---|
| **DAR** | Delayed auto-reclosing |
| **db** | dead band |
| **DBDL** | Dead bus dead line |
| **DBLL** | Dead bus live line |
| **DC** | Direct Current |
| **DIN-rail** | Rail conforming to DIN standard |
| **DIP-switch** | Small switch mounted on a printed circuit board |
| **DLLB** | Dead line live bus |
| **DSP** | Digital signal processor |
| **DTT** | Direct transfer trip scheme |
| **EHV network** | Extra high voltage network |
| **EIA** | Electronic Industries Association |
| **EMC** | Electro magnetic compatibility |
| **ENGV1** | Enable execution of step one |
| **ENMULT** | Current multiplier used when THOL is used for two or more lines |
| **EMI** | Electro magnetic interference |
| **ESD** | Electrostatic discharge |
| **FOX 20** | Modular 20 channel telecommunication system for speech, data and protection signals |
| **FOX 512/515** | Access multiplexer |
| **FOX 6Plus** | Compact, time-division multiplexer for the transmission of up to seven duplex channels of digital data over optical fibers |
| **FPGA** | Field Programmable Gate Array |
| **FRRATED** | Rated system frequency |
| **FSMPL** | Physical channel number for frequency calculation |
| **G.703** | Electrical and functional description for digital lines used by local telephone companies. Can be transported over balanced and unbalanced lines |
| **G.711** | Standard for pulse code modulation of analog signals on digital lines |
| **GCM** | Communication interface module with carrier of GPS receiver module |
| **GI** | General interrogation command |
| **GIS** | Gas insulated switchgear. |
| **GOOSE** | Generic Object Orientated Substation Event |
| **GPS** | Global positioning system |
| **GR** | GOOSE Receive (interlock) |
| **HDLC protocol** | High level data link control, protocol based on the HDLC standard |
| **HFBR connector type** | Fibre connector receiver |

| | |
|---|---|
| **HMI** | Human-Machine Interface |
| **HSAR** | High-Speed Auto-Reclosing |
| **HV** | High voltage |
| **HVDC** | High voltage direct current |
| **HysAbsFreq** | Absolute hysteresis for over and under frequency operation |
| **HysAbsMagn** | Absolute hysteresis for signal magnitude in percentage of Ubase |
| **HysRelMagn** | Relative hysteresis for signal magnitude |
| **HystAbs** | Overexcitation level of absolute hysteresis as a percentage |
| **HystRel** | Overexcitation level of relative hysteresis as a percentage |
| **IBIAS** | Magnitude of the bias current common to L1, L2 and L3 |
| **IDBS** | Integrating dead-band supervision |
| **IDMT** | Minimum inverse delay time |
| **IDMTtmin** | Inverse delay minimum time in seconds |
| **IdMin** | Operational restrictive characteristic, section 1 sensitivity, multiple Ibase |
| **IDNSMAG** | Magnitude of negative sequence differential current |
| **Idunre** | Unrestrained prot. limit multiple of winding1 rated current |
| **ICHARGE** | Amount of compensated charging current |
| **IEC** | International Electrical Committee |
| **IEC 186A** | |
| **IEC 60044-6** | IEC Standard, Instrument transformers – Part 6: Requirements for protective current transformers for transient performance |
| **IEC 60870-5-103** | Communication standard for protective equipment. A serial master/slave protocol for point-to-point communication |
| **IEEE** | Institute of Electrical and Electronics Engineers |
| **IEEE 802.12** | A network technology standard that provides 100 Mbits/s on twisted-pair or optical fiber cable |
| **IEEE P1386.1** | PCI Mezzanine Card (PMC) standard for local bus modules. References the CMC (IEEE P1386, also known as Common Mezzanine Card) standard for the mechanics and the PCI specifications from the PCI SIG (Special Interest Group) for the electrical |
| **EMF** | Electro magnetic force |
| **IED** | Intelligent electronic device |
| **I-GIS** | Intelligent gas insulated switchgear |
| **IL1RE** | Real current component, phase L1 |
| **IL1IM** | Imaginary current component, phase L1 |
| **IminNegSeq** | Negative sequence current must be higher than this to be used |
| **INAMPL** | Present magnitude of residual current |
| **INSTMAGN** | Magnitude of instantaneous value |

| | |
|---|---|
| **INSTNAME** | Instance name in signal matrix tool |
| **IOM** | Binary Input/Output module |
| **IPOSIM** | Imaginary part of positive sequence current |
| **IPOSRE** | Real component of positve sequence current |
| **IP 20** | Enclosure protects against solid foreign objects 12.5mm in diameter and larger but no protection against ingression of liquid according to IEC60529. Equivalent to NEMA type 1. |
| **IP 40** | Enclosure protects against solid foreign objects 1.0mm in diameter or larger but no protection against ingression of liquid according to IEC60529. |
| **IP 54** | Degrees of protection provided by enclosures (IP code) according to IEC 60529. Dust protected. Protected against splashing water. Equivalent to NEMA type 12. |
| **Ip>block** | Block of the function at high phase current in percentage of base |
| **IRVBLK** | Block of current reversal function |
| **IRV** | Activation of current reversal logic |
| **ITU** | International Telecommunications Union |
| **k2** | Time multiplier in IDMT mode |
| **kForIEEE** | Time multiplier for IEEE inverse type curve |
| **LAN** | Local area network |
| **LIB 520** | |
| **LCD** | Liquid chrystal display |
| **LDCM** | Line differential communication module |
| **LDD** | Local detection device |
| **LED** | Light emitting diode |
| **LNT** | LON network tool |
| **LON** | Local operating network |
| **MAGN** | Magnitude of deadband value |
| **MCB** | Miniature circuit breaker |
| **MCM** | Mezzanine carrier module |
| **MIM** | Milliampere Input Module |
| **MIP** | |
| **MPPS** | |
| **MPM** | Main processing module |
| **MV** | Medium voltage |
| **MVB** | Multifunction vehicle bus. Standardized serial bus originally developed for use in trains |
| **MVsubEna** | Enable substitution |

| | |
|---|---|
| **NegSeqROA** | Operate angle for internal/external negative sequence fault discriminator. |
| **NSANGLE** | Angle between local and remote negative sequence currents |
| **NUMSTEP** | Number of steps that shall be activated |
| **NX** | |
| **OCO cycle** | Open-Close-Open cycle |
| **PCI** | Peripheral Component Interconnect |
| **PCM** | Pulse code modulation |
| **PISA** | Process interface for sensors & actuators |
| **PLD** | Programmable Logic Device |
| **PMC** | |
| **POTT** | Permissive overreach transfer trip |
| **PPS** | Precise Positioning System |
| **Process bus** | Bus or LAN used at the process level, that is, in near proximity to the measured and/or controlled components |
| **PSM** | Power supply module |
| **PST** | Parameter setting tool |
| **PT ratio** | Potential transformer or voltage transformer ratio |
| **PUTT** | Permissive underreach transfer trip |
| **R1A** | Source resistance A (near end) |
| **R1B** | Source resistance B (far end) |
| **RADSS** | Resource Allocation Decision Support System |
| **RASC** | Synchrocheck relay, from COMBIFLEX range. |
| **RCA** | Functionality characteristic angle |
| **REVAL** | Evaluation software |
| **RFPP** | Resistance of phase-to-phase faults |
| **RFPE** | Resistance of phase-to-earth faults |
| **RISC** | Reduced instruction set computer |
| **RMS value** | Root mean square value |
| **RS422** | A balanced serial interface for the transmission of digital data in point-to-point connections |
| **RS485** | Serial link according to EIA standard RS485 |
| **RS530** | A generic connector specification that can be used to support RS422, V.35 and X.21 and others |
| **RTU** | Remote Terminal Unit |
| **RTC** | Real Time Clock |
| **SA** | Substation Automation |

| | |
|---|---|
| **SC** | Switch or push-button to close |
| **SCS** | Station control system |
| **SLM** | Serial communication module. Used for SPA/LON/IEC communication |
| **SMA connector** | Sub Miniature version A connector |
| **SMS** | Station monitoring system |
| **SPA** | Strömberg Protection Acquisition, a serial master/slave protocol for point-to-point communication |
| **SPGGIO** | Single Point Gxxxxx Generic Input/Output |
| **SRY** | Switch for CB ready condition |
| **ST3UO** | RMS voltage at neutral point |
| **STL1** | Start signal from phase L1 |
| **ST** | Switch or push-button to trip |
| **SVC** | Static VAr compensation |
| **t1 1Ph** | Open time for shot 1, single phase |
| **t1 3PhHS** | Open time for shot 1, high speed reclosing three phase |
| **tAutoContWait** | Wait period after close command before next shot |
| **tCBCLosedMin** | Minimum time that the circuit breaker must be closed before new sequence is permitted |
| **tExtended t1** | Open time extended by this value if Extended t1 is true |
| **THL** | Thermal Overload Line cable |
| **THOL** | Thermal overload |
| **tInhibit** | Reset reclosing time for inhibit |
| **tPulse** | Pulse length for single command outputs |
| **TP** | Logic Pulse Timer |
| **tReporting** | Cycle time for reporting of counter value |
| **tRestore** | Restore time delay |
| **TCS** | Trip circuit supervision |
| **TNC connector** | Type of bayonet connector, like BNC connector |
| **TPZ, TPY, TPX, TPS** | Current transformer class according to IEC |
| **tReclaim** | Duration of the reclaim time |
| **TRIPENHA** | Trip by enhanced restrained differential protection |
| **TRIPRES** | Trip by restrained differential protection |
| **TRL1** | Trip signal from phase 1 |
| **truck** | Isolator with wheeled mechanism |
| **tSync** | Maximum wait time for synchrocheck OK |
| **TTRIP** | Estimated time to trip (in minutes) |
| **UBase** | Base setting for phase-phase voltage in kilovolts |

| | |
|---|---|
| **U/I-PISA** | Process interface components that delivers measured voltage and current values |
| **UNom** | Nominal voltage in % of UBase for voltage based timer |
| **UPS** | Measured signal magnitude (voltage protection) |
| **UTC** | Coordinated Universal Time. A coordinated time scale, maintained by the Bureau International des Poids et Mesures (BIPM), which forms the basis of a coordinated dissemination of standard frequencies and time signals |
| **V.36** | Same as RS449. A generic connector specification that can be used to support RS422 and others |
| **VDC** | Volts Direct Current |
| **WEI** | Week-end infeed logic |
| **VT** | Voltage transformer |
| **VTSZ** | Block of trip from weak-end infeed logic by an open breaker |
| **X1A** | Source reactance A (near end) |
| **X1B** | Source reactance B (far end) |
| **X1L** | Positive sequence line reactance |
| **X.21** | A digital signalling interface primarily used for telecom equipment |
| **XLeak** | Winding reactance in primary ohms |
| **XOL** | Zero sequence line reactance |
| **ZCOM-CACC** | Forward overreaching zone used in the communication scheme |
| **ZCOM-CR** | Carrier Receive Signal |
| **ZCOM-TRIP** | Trip from the communication scheme |
| **ZCOM-LCG** | Alarm Signal LIne-check Guard |
| | |

# Chapter 2 General

### About this chapter

This chapter describes the terminal in general.

# 1 Terminal identification rated and base values

## 1.1 General terminal parameters

Use the terminal identifiers to name the individual terminal for identification purposes. Use the terminal reports to check serial numbers of the terminal and installed modules and to check the firmware version.

Identifiers and reports are accessible by using the HMI as well as by SMS or SCS systems.

Path in local HMI: Configurations/Identifiers

**Table 4: Set parameters for the general terminal parameters function**

| Parameter | Range | Default | Unit | Description |
|---|---|---|---|---|
| Station Name | 0-16 | Station Name | char | Identity name for the station |
| Station No | 0-99999 | 0 | - | Identity number for the station |
| Object Name | 0-16 | Object Name | char | Identity name for the protected object |
| Object No | 0-99999 | 0 | - | Identity number for the protected object |
| Unit Name | 0-16 | Unit Name | char | Identity name for the terminal |
| Unit No | 0-99999 | 0 | - | Identity number for the terminal |

## 1.2 Basic protection parameters

Path in local HMI: Configuration/AnalogInputs/General

**Table 5: Setting parameters for Analog Inputs - General**

| Parameter | Range | Default | Unit | Description |
|---|---|---|---|---|
| CTEarth | In/Out | Out | - | CT earthing location<br>In = bus side<br>Out = line side |
| fr | 50, 60, 16 2/3 | 50 | Hz | System frequency |

Path in local HMI: Configuration/AnalogInputs/TrafoinpModule

**Table 6: Rated Voltages**

| Parameter | Range | Default | Unit | Description |
|---|---|---|---|---|
| Ur * | 10.000 - 500.000 Step: 0.001 | 110.000 | V | Rated voltage of transformer module |
| U1r * | 10.000 - 500.000 Step: 0.001 | 63.509 | V | Rated voltage of transformer on input U1 |
| U2r * | 10.000 - 500.000 Step: 0.001 | 63.509 | V | Rated voltage of transformer on input U2 |
| U3r* | 10.000 - 500.000 Step: 0.001 | 63.509 | V | Rated voltage of transformer on input U3 |
| U4r* | 10.000 - 500.000 Step: 0.001 | 63.509 | V | Rated voltage of transformer on input U4 |
| U5r* | 10.000 - 500.000 Step: 0.001 | 63.509 | V | Rated voltage of transformer on input U5 |
| *) Setting can be done through the local HMI only. The setting should normally not be changed by the user. The setting is factory preset and depends on the selected transformer input module. | | | | |

Path in local HMI: Configuration/AnalogInputs/U1-U5

**Table 7: Analog Inputs - Voltage**

| Parameter | Range | Default | Unit | Description |
|---|---|---|---|---|
| U1b | 30.000 - 500.000 Step:0.001 | 63.509 | V | Base voltage of input U1 |
| U1Scale | 1.000 - 20000.000 Step: 0.001 | 2000.000 | - | Main voltage transformer ratio, input U1 |
| Name_U1 | 0 - 13 | U1 | char | User-defined name of input U1 |
| U2b | 30.000 - 500.000 Step: 0.001 | 63.509 | V | Base voltage of input U2 |
| U2Scale | 1.000 - 20000.000 Step: 0.001 | 2000.000 | - | Main voltage transformer ratio, input U2 |
| Name_U2 | 0 - 13 | U2 | char | User-defined name of input U2 |
| U3b | 30.000 - 500.000 Step: 0.001 | 63.509 | V | Base voltage of input U3 |

| Parameter | Range | Default | Unit | Description |
|---|---|---|---|---|
| U3Scale | 1.000 - 20000.000 Step: 0.001 | 2000.000 | - | Main voltage transformer ratio, input U3 |
| Name_U3 | 0 - 13 | U3 | char | User-defined name of input U3 |
| U4b | 30.000 - 500.000 Step: 0.001 | 63.509 | V | Base voltage of input U4 |
| U4Scale | 1.000 - 20000.000 Step: 0.001 | 2000.000 | - | Main voltage transformer ratio, input U4 |
| Name_U4 | 0 - 13 | U4 | char | User-defined name of input U4 |
| U5b | 30.000 - 500.000 Step: 0.001 | 63.509 | V | Base voltage of input U5 |
| U5Scale | 1.000 - 20000.000 Step: 0.001 | 2000.000 | - | Main voltage transformer ratio, input U5 |
| Name_U5 | 0 - 13 | U5 | char | User-defined name of input U5 |

Path in local HMI: Configuration/AnalogInputs/TrafoinpModule

**Table 8: Rated Currents**

| Parameter | Range | Default | Unit | Description |
|---|---|---|---|---|
| Ir * | 0.1000 - 10.0000 Step: 0.0001 | 1.0000 | A | Rated current of transformer module |
| I1r * | 0.1000 - 10.0000 Step: 0.0001 | 1.0000 | A | Rated current of transformer on input I1 |
| I2r * | 0.1000 - 10.0000 Step: 0.0001 | 1.0000 | A | Rated current of transformer on input I2 |
| I3r* | 0.1000 - 10.0000 Step: 0.0001 | 1.0000 | A | Rated current of transformer on input I3 |
| I4r* | 0.1000 - 10.0000 Step: 0.0001 | 1.0000 | A | Rated current of transformer on input I4 |
| I5r* | 0.1000 - 10.0000 Step: 0.0001 | 1.0000 | A | Rated current of transformer on input I5 |
| *) Setting can be done through the local HMI only. The setting should normally not be changed by the user. The setting is factory preset and depends on the selected transformer input module. | | | | |

Path in local HMI: Configuration/AnalogInputs/I1-I5

**Table 9: Analog Inputs - Current**

| Parameter | Range | Default | Unit | Description |
|---|---|---|---|---|
| I1b | 0.1 - 10.0<br>Step: 0.1 | 1.0 | A | Base current of input I1 |
| I1Scale | 1.000 - 40000.000<br>Step: 0.001 | 2000.000 | - | Main current transformer ratio, input I1 |
| Name_I1 | 0 - 13 | I1 | char | User-defined name of input I1 |
| I2b | 0.1 - 10.0<br>Step: 0.1 | 1.0 | A | Base current of input I2 |
| I2Scale | 1.000 - 40000.000<br>Step:0.001 | 2000.000 | - | Main current transformer ratio, input I2 |
| Name_I2 | 0 - 13 | I2 | char | User-defined name of input I2 |
| I3b | 0.1 - 10.0<br>Step: 0.1 | 1.0 | A | Base current of input I3 |
| I3Scale | 1.000 - 40000.000<br>Step: 0.001 | 2000.000 | - | Main current transformer ratio, input I3 |
| Name_I3 | 0 - 13 | I3 | char | User-defined name of input I3 |
| I4b | 0.1 - 10.0<br>Step: 0.1 | 1.0 | A | Base current of input I4 |
| I4Scale | 1.000 - 40000.000<br>Step: 0.001 | 2000.000 | - | Main current transformer ratio, input I4 |
| Name_I4 | 0 - 13 | I4 | char | User-defined name of input I4 |
| I5b | 0.1 - 10.0<br>Step: 0.1 | 1.0 | A | Base current of input I5 |
| I5Scale | 1.000 - 40000.000<br>Step: 0.001 | 2000.000 | - | Main current transformer ratio, input I5 |
| Name_I5 | 0 - 13 | I5 | char | User-defined name of input I5 |

Path in local HMI: Configuration/AnalogInputs/U, I, P, Q, S, f

**Table 10: Labels for service values**

| Parameter | Range | Default | Unit | Description |
|---|---|---|---|---|
| Name_U | 0 - 13 | U | Char | Name for analogue input U |

| Parameter | Range | Default | Unit | Description |
|---|---|---|---|---|
| Name_I | 0 - 13 | I | Char | Name for analogue input I |
| Name_P | 0 - 13 | P | Char | Name for analogue input P |
| Name_Q | 0 - 13 | Q | Char | Name for analogue input Q |
| Name_S | 0 - 13 | S | Char | Name for analogue input S |
| Name_f | 0 - 13 | f | Char | Name for analogue input f |

## 1.3 Calendar and clock

**Table 11: Calendar and clock**

| Parameter | Range |
|---|---|
| Built-in calender | With leap years through 2098 |

# 2 Technical data

## 2.1 Case dimensions

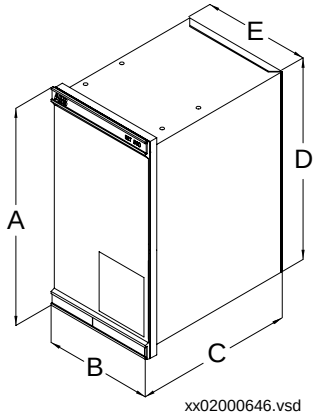


*Figure 3: Case without rear cover*

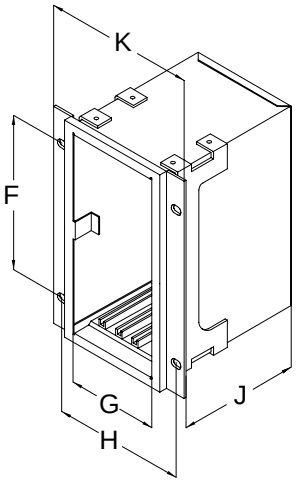


*Figure 4: Case without rear cover with 19” rack mounting kit*

| Case size | A | B | C | D | E | F | G | H | J | K |
|---|---|---|---|---|---|---|---|---|---|---|
| 6U, 1/2 x 19” | 265.9 | 223.7 | 204.1 | 252.9 | 205.7 | 190.5 | 203.7 | - | 186.6 | - |
| The H and K dimensions are defined by the 19” rack mounting kit | | | | | | | | | | (mm) |

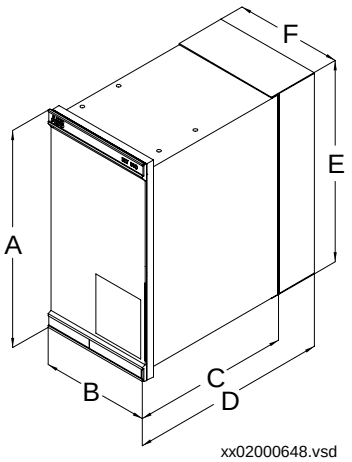


*Figure 5: Case with rear cover.*

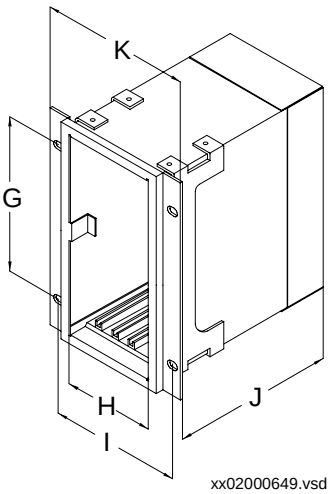


*Figure 6: Case with rear cover and 19” rack mounting kit.*

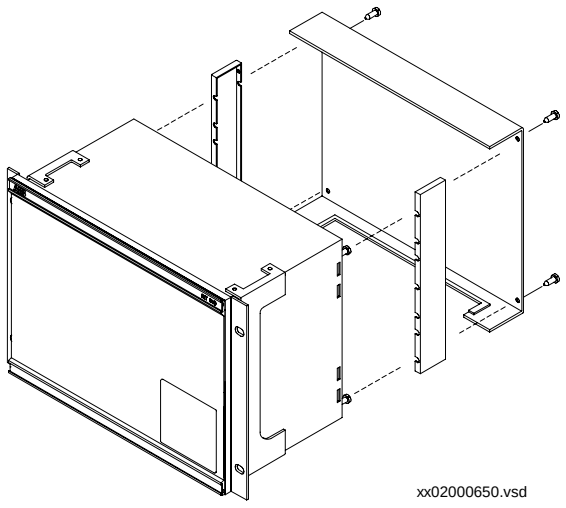


*Figure 7: Rear cover case with details.*

| Case size | A | B | C | D | E | F | G | H | J | K |
|---|---|---|---|---|---|---|---|---|---|---|
| 6U, 1/2 x 19” | 265.9 | 223.7 | 242.1 | 252.9 | 205.7 | 190.5 | 203.7 | - | 186.6 | - |
| 6U, 3/4 x 19” | 265.9 | 336 | 242.1 | 252.9 | 318 | 190.5 | 316 | - | 186.6 | - |
| The H and K dimensions are defined by the 19” rack mounting kit. All dimensions are in millimeters. | | | | | | | | | | |

**Panel cut-outs for REx 500 series, single case**

Flush mounting

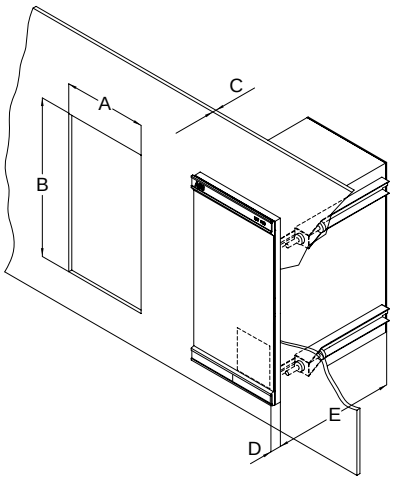

xx02000665.vsd

Semi-flush mounting

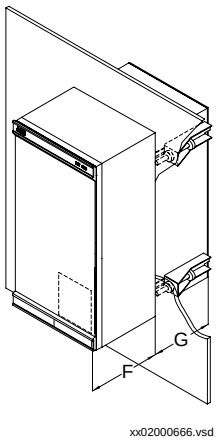

xx02000666.vsd

| Case size | Cut-out dimensions (mm) | |
|---|---|---|
| | **A+/-1** | **B+/-1** |
| 6U, 1/2 x 19” | 210.1 | 254.3 |
| 6U, 3/4 x 19” | 322.4 | 254.3 |

C = 4-10 mm

D = 16.5 mm

E = 187.6 mm without rear protection cover, 228.6 mm with rear protection cover

F = 106.5 mm

G = 97.6 mm without rear protection cover, 138.6 mm with rear protection cover

The flush mounting kit consists of four fasteners (2) with appropriate mounting details (4) and a sealing strip (5) for fastening to the IED (3).

To receive IP54 class protection, an additional sealing (1) must be ordered with the IED. This sealing is factory mounted.

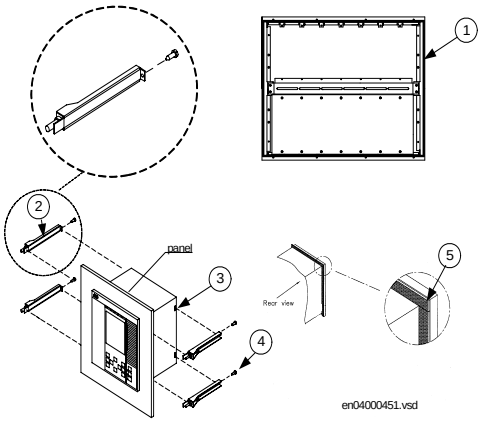


*Figure 8: The flush mounting kit*

**Dimensions, wall mounting**

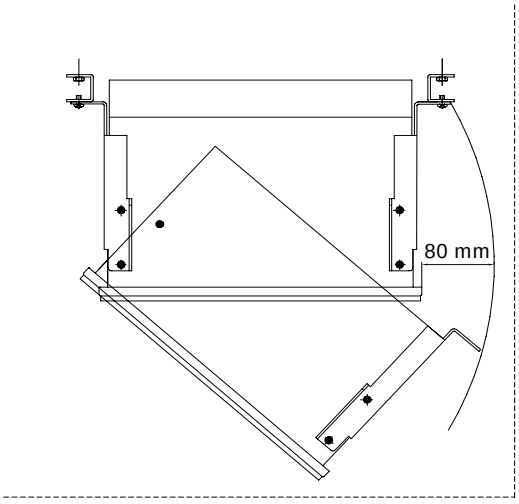


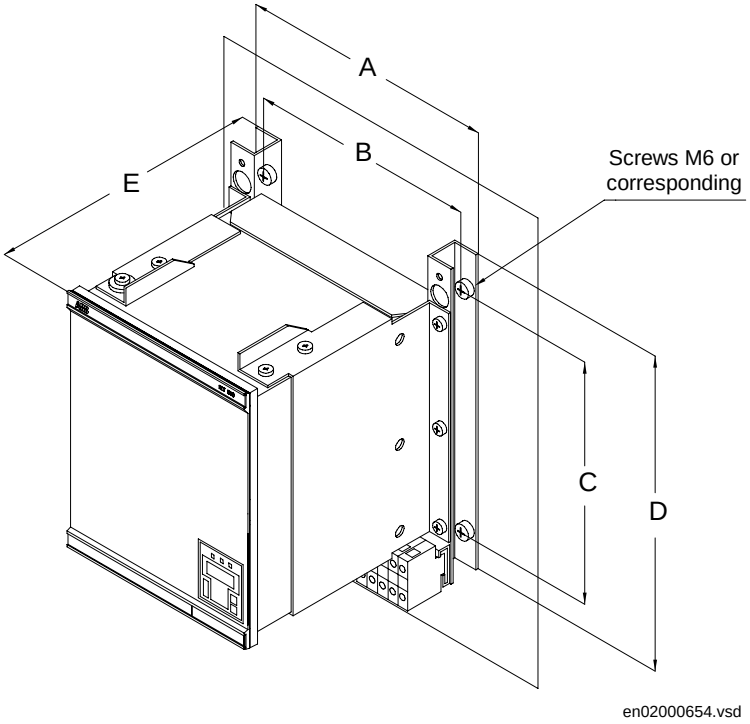


*Figure 9: Wall mounting*

| Case size (mm) | A | B | C | D | E |
|---|---|---|---|---|---|
| 6U, 1/2 x 19” | 292 | 267.1 | 272.8 | 390 | 247 |
| 6U, 3/4 x 19” | 404.3 | 379.4 | 272.8 | 390 | 247 |

## 2.2 Weight

**Table 12: Weight**

| Case size | Weight |
|---|---|
| 6U, 1/2 x 19” | ≤ 8.5 kg |
| 6U, 3/4 x 19” | ≤ 11 kg |

## 2.3 Unit

**Table 13: Case**

| | |
|---|---|
| Material | Steel sheet |
| Front plate | Steel sheet profile with cut-out for HMI and for 18 LED when included |
| Surface treatment | Aluzink preplated steel |
| Finish | Light beige (NCS 1704-Y15R) |
| Degree of protection | Front side: IP40, optional IP54 with sealing strip. Rear side: IP20 |

## 2.4 Power consumption

**Table 14: Power consumption, basic terminal**

| Size of terminal | Typical value |
|---|---|
| 1/2 of 19” rack | ≤ 18 W |
| 3/4 of 19” rack | ≤ 26 W |

## 2.5 Environmental properties

**Table 15: Temperature and humidity influence**

| Parameter | Reference value | Nominal range | Influence |
|---|---|---|---|
| Ambient temperature<br>Operative range | +20 °C<br>-25 °C to +55°C | -10 °C to +55 °C | 0.01% / °C |
| Relative humidity<br>Operative range | 10%-90%<br>0%-95% | 10%-90% | - |
| Storage temperature | -40 °C to +70 °C | - | - |

**Table 16: Auxiliary DC supply voltage influence on functionality during operation**

| Dependence on | Within nominal range | Influence |
|---|---|---|
| Ripple, in DC auxiliary voltage | Max 12% | 0.01% / % |
| Interrupted auxiliary DC voltage | 48-250 V dc ±20% | |
| Without reset | | <50 ms |
| Correct function | | 0-∞ s |
| Restart time | | <180 s |

**Table 17: Frequency influence**

| Dependence on | Within nominal range | Influence |
|---|---|---|
| Frequency dependence | $f_r$ ±10% for 16 2/3 Hz<br>$f_r$ ±10% for 50 Hz<br>$f_r$ ±10% for 60 Hz | ±2.0% / Hz |
| Harmonic frequency dependence (10% content) | 2nd, 3rd and 5th harmonic of $f_r$ | ±6.0% |

**Table 18: Electromagnetic compatibility**

| Test | Type test values | Reference standards |
|---|---|---|
| 1 MHz burst disturbance | 2.5 kV | IEC 60255-22-1, Class III |
| For short range galvanic modem | 2.5kV | IEC 60255-22-1, Class III |
| For galvanic interface | | |
| • common mode<br>• differential mode | 1 kV<br>0.5 kV | IEC 60255-22-1, Class II<br>IEC 60255-22-1, Class II |
| Electrostatic discharge | | |
| Direct application | Air 8 kV<br>Contact 6 kV | IEC 60255-22-2, Class III |
| For short range galvanic modem | Air 8 kV | IEC 60255-22-2, Class III |
| | Contact 6 kV | |
| Fast transient disturbance | 4 kV | IEC 60255-22-4, Class A |
| For short range galvanic modem | 4 kV | IEC 60255-22-4, Class A |
| For galvanic interface | 1 kV | IEC 60255-22-4, Class B |
| Surge immunity test | 1-2 kV, 1.2/50μs<br>high energy | IEC 60255-22-5 |
| Power frequency immunity test | 150-300 V,<br>50 Hz | IEC 60255-22-7, Class A |
| Power frequency magnetic field test | 1000 A/m, 3s | IEC 61000-4-8, Class V |
| Radiated electromagnetic field disturbance | 10 V/m, 80-1000 MHz | IEC 60255-22-3 |

| Test | Type test values | Reference standards |
|---|---|---|
| Radiated electromagnetic field disturbance | 10 V/m, 80-1000 MHz, 1.4-2.0 GHz | IEC 61000-4-3, Class III |
| Radiated electromagnetic field disturbance | 35 V/m<br>26-1000 MHz | IEEE/ANSI C37.90.2 |
| Conducted electromagnetic field disturbance | 10 V, 0.15-80 MHz | IEC 60255-22-6 |
| Radiated emission | 30-1000 MHz | IEC 60255-25 |
| Conducted emission | 0.15-30 MHz | IEC 60255-25 |

**Table 19: Insulation**

| Test | Type test values | Reference standard |
|---|---|---|
| Dielectric test | 2.0 kVAC, 1 min. | IEC 60255-5 |
| Impulse voltage test | 5 kV, 1.2/50 μs, 0.5 J | |
| Insulation resistance | >100 MΩ at 500 VDC | |

**Table 20: CE compliance**

| Test | According to |
|---|---|
| Immunity | EN 61000-6-2 |
| Emissivity | EN 61000-6-4 |
| Low voltage directive | EN 50178 |

**Table 21: Mechanical tests**

| Test | Type test values | Reference standards |
|---|---|---|
| Vibration | Class I | IEC 60255-21-1 |
| Shock and bump | Class I | IEC 60255-21-2 |
| Seismic | Class I | IEC 60255-21-3 |

# Chapter 3 Common functions

### About this chapter

This chapter presents the common functions in the terminal.

# 1 Real-time clock with external time synchronization (TIME)

## 1.1 Application

Use the time synchronization source selector to select a common source of absolute time for the terminal when it is a part of a protection system. This makes comparison of events and disturbance data between all terminals in a SA system possible.

## 1.2 Function block

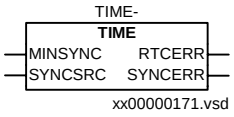


## 1.3 Input and output signals

**Table 22: Input signals for the TIME (TIME-) function block**

| Signal | Description |
|---|---|
| MINSYNC | Minute pulse input |
| SYNCSRC | Synchronization source selector input. See settings for details. |

Path in local HMI: ServiceReport/Functions/Time

**Table 23: Output signals for the TIME (TIME-) function block**

| Signal | Description |
|---|---|
| RTCERR | Real time clock error |
| SYNCERR | Time synchronisation error |

## 1.4 Setting parameters

Path in local HMI: Configuration/Time

**Table 24: Setting parameters for the time synchronization source selector function**

| Parameter | Range | Default | Unit | Description |
|---|---|---|---|---|
| SYNCSRC | 0-5 | 0 | - | Selects the time synchronization source:<br>0: No source. Internal real time clock is used without fine tuning.<br>1: LON bus<br>2: SPA bus<br>3: IEC 60870-5-103 bus<br>4: Minute pulse, positive flank<br>5: Minute pulse, negative flank |

## 1.5 Technical data

**Table 25: TIME - Time synchronisation**

| Function | Accuracy |
|---|---|
| Time tagging resolution | 1 ms |
| Time tagging error with synchronisation once/60 s | ± 1.5 ms |
| Time tagging error without synchronisation | ± 3 ms/min |

# 2 Four parameter setting groups (GRP)

## 2.1 Application

Use the four sets of settings to optimize the terminals operation for different system conditions. By creating and switching between fine tuned setting sets, either from the human-machine interface or configurable binary inputs, results in a highly adaptable terminal that can cope with a variety of system scenarios.

## 2.2 Logic diagram

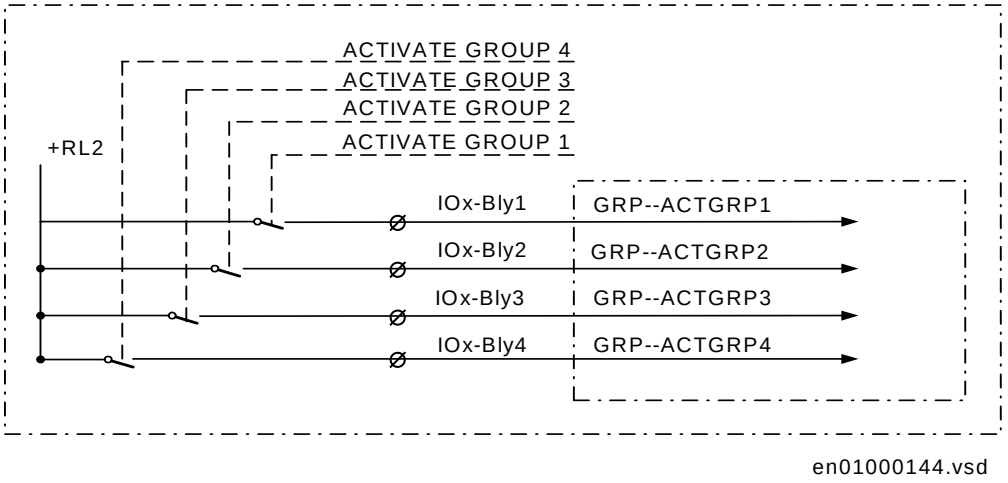


*Figure 10: Connection of the function to external circuits*

## 2.3 Function block

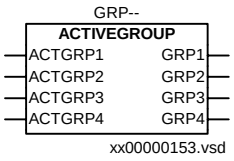

## 2.4 Input and output signals

**Table 26: Input signals for the ACTIVEGROUP (GRP--) function block**

| Signal | Description |
|---|---|
| ACTGRP1 | Selects setting group 1 as active |
| ACTGRP2 | Selects setting group 2 as active |
| ACTGRP3 | Selects setting group 3 as active |
| ACTGRP4 | Selects setting group 4 as active |

Path in local HMI: ServiceReport/Functions/ActiveGroup/FuncOutputs

**Table 27: Output signals for the ACTIVEGROUP (GRP--) function block**

| Signal | Description |
|---|---|
| GRP1 | Setting group 1 is active |
| GRP2 | Setting group 2 is active |
| GRP3 | Setting group 3 is active |
| GRP4 | Setting group 4 is active |

# 3 Setting restriction of HMI (SRH)

***Note!***

*The HMI--BLOCKSET functional input must be configured to the selected binary input before setting the setting restriction function in operation. Carefully read the instructions.*

## 3.1 Application

Use the setting restriction function to prevent unauthorized setting changes and to control when setting changes are allowed. Unpermitted or uncoordinated changes by unauthorized personnel may influence the security of people and cause severe damage to primary and secondary power circuits.

By adding a key switch connected to a binary input a simple setting change control circuit can be built simply allowing only authorized keyholders to make setting changes from the local HMI.

## 3.2 Functionality

The restriction of setting via the local HMI can be activated from the local HMI only. Activating the local HMI setting restriction prevent unauthorized changes of the terminal settings or configuration.

The HMI-BLOCKSET functional input can be configured only to one of the available binary inputs of the terminal. The terminal is delivered with the default configuration HMI--BLOCKSET connected to NONE-NOSIGNAL. The configuration can be made from the local HMI only, see the Installation and comissioning manual.

The function permits remote changes of settings and reconfiguration through the serial communication ports. The restriction of setting from remote can be activated from the local HMI only. Refer to section 2.4.3 "Setting parameters" for SPA communication parameters.

All other functions of the local human-machine communication remain intact. This means that an operator can read disturbance reports, setting values, the configuration of different logic circuits and other available information.

## 3.3 Logic diagram

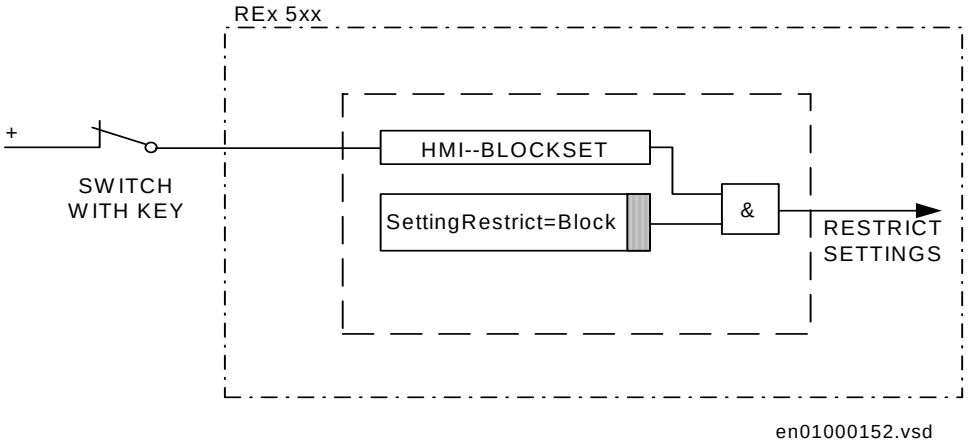


*Figure 11: Connection and logic diagram for the BLOCKSET function*

## 3.4 Input and output signals

**Table 28: Input signals for the setting restriction of HMI function**

| Signal | Description |
|---|---|
| BLOCKSET | Input signal to block setting and/or configuration changes from the local HMI. **WARNING:** Read the instructions before use. Default configuration to NONE-NOSIGNAL. |

## 3.5 Setting parameters

Path in local HMI: Configuration/LocalHMI/SettingRestrict

**Table 29: Setting parameters for the setting restriction of HMI function**

| Parameter | Range | Default | Unit | Description |
|---|---|---|---|---|
| SettingRestrict | Open, Block | Open | - | Open: Setting parameters can be changed.<br>Block: Setting parameters can only be changed if the logic state of the BLOCKSET input is zero.<br>**WARNING:** Read the instructions before use. |

# 4 I/O system configurator

## 4.1 Application

The I/O system configurator must be used in order for the terminal's software to recognize added modules and to create internal address mappings between modules and protections and other functions.

## 4.2 Logic diagram

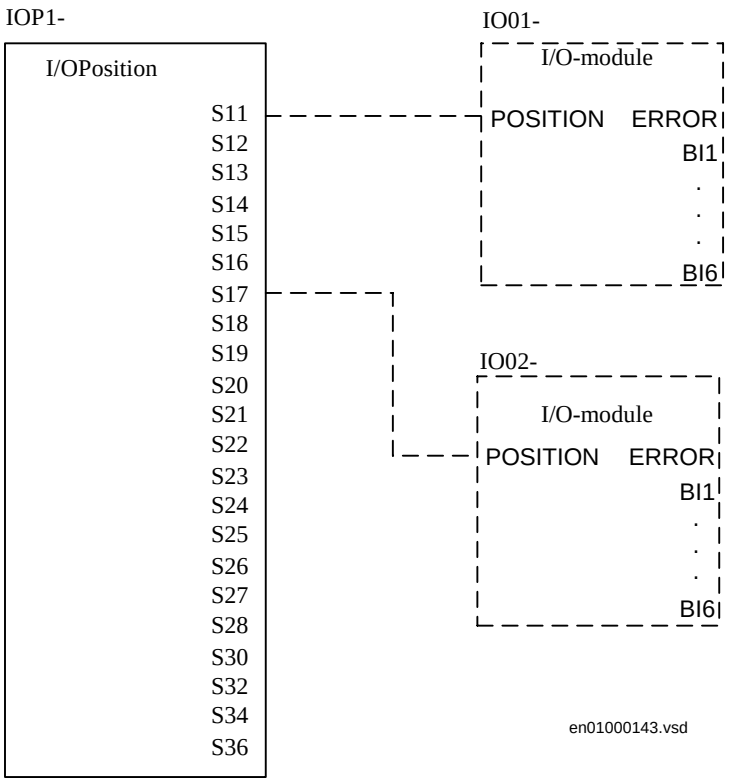


*Figure 12: Example of an I/O-configuration in the graphical tool CAP 531 for a REx 5xx with two BIMs.*

## 4.3 Function block

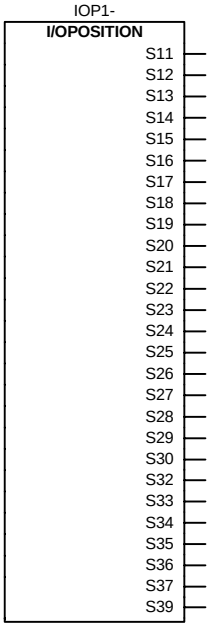


## 4.4 Input and output signals

**Table 30: Output signals for the I/OPOSITION (IOPn-) function block**

| Signal | Description |
|---|---|
| Snn | Slot position nn (nn=11-39) |

# 5 Self supervision with internal event recorder (INT)

## 5.1 Application

Use the local HMI, SMS or SCS to view the status of the self-supervision function. The self-supervision operates continuously and includes:

- Normal micro-processor watchdog function
- Checking of digitized measuring signals
- Checksum verification of PROM contents and all types of signal communication

## 5.2 Function block

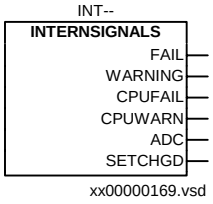

## 5.3 Logic diagram

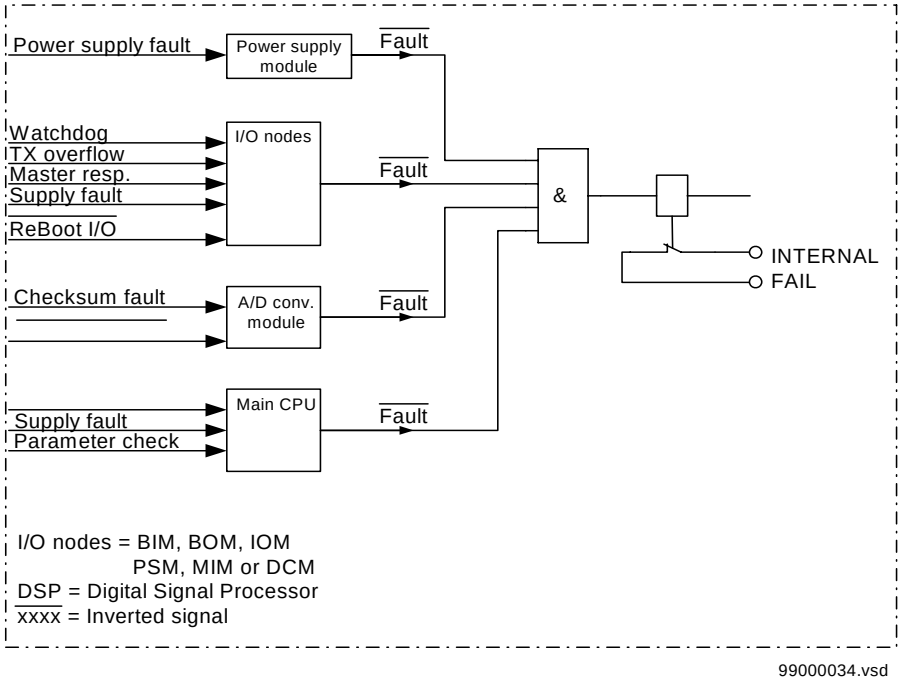


*Figure 13: Hardware self-supervision, potential-free alarm contact.*

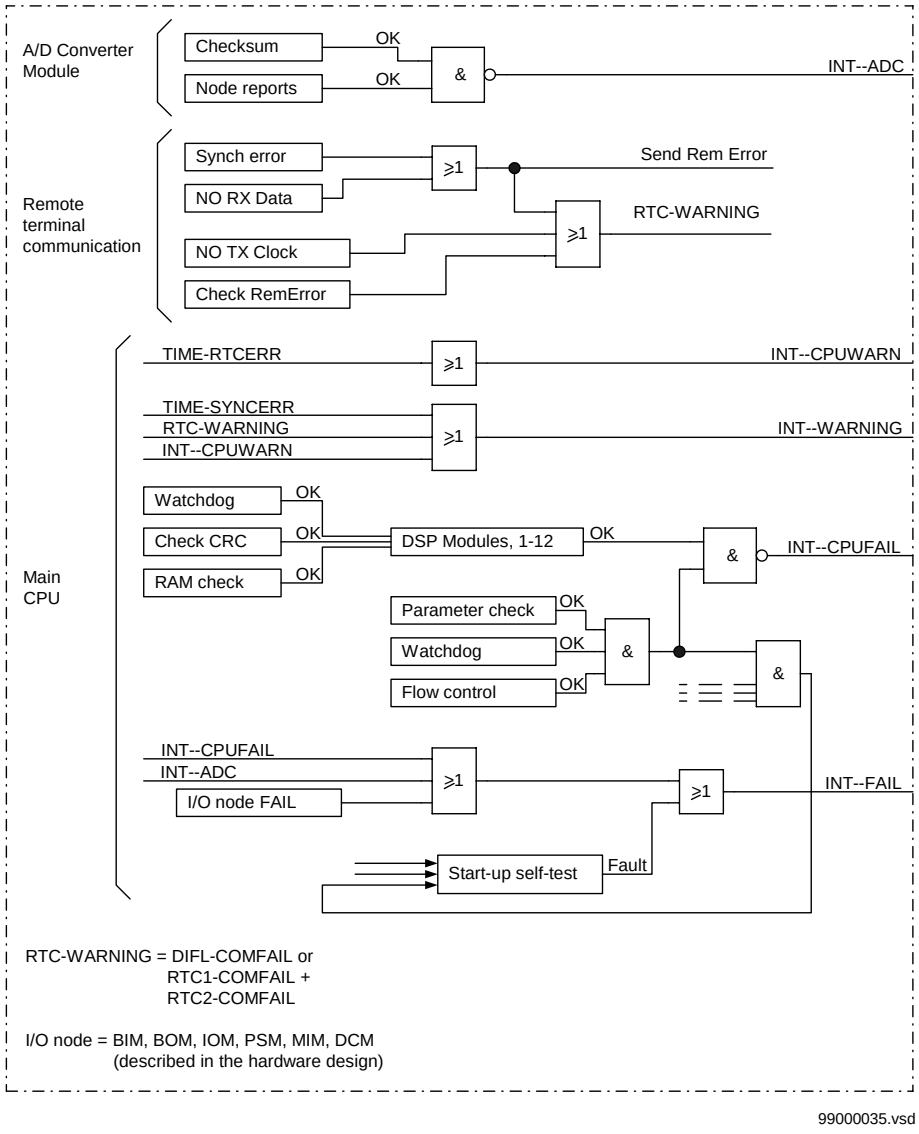


*Figure 14: Software self-supervision, function block INTernal signals*

## 5.4 Input and output signals

Path in local HMI: ServiceReport/Functions/InternSignals

**Table 31: Output signals for the INTERNSIGNALS (INT--) function block**

| Signal | Description |
|---|---|
| FAIL | Internal fail status |
| WARNING | Internal warning status |
| CPUFAIL | CPU module fail status |
| CPUWARN | CPU module warning status |
| ADC | A/D-converter error |
| SETCHGD | Setting changed |

## 5.5 Technical data

**Table 32: Internal event list**

| Data | Value |
|---|---|
| Recording manner | Continuous, event controlled |
| List size | 40 events, first in-first out |

# 6 Configurable logic blocks (CL1)

## 6.1 Application

The user can with the available logic function blocks build logic functions and configure the terminal to meet application specific requirements.

Different protection, control, and monitoring functions within the REx 5xx terminals are quite independent as far as their configuration in the terminal is concerned. The user can not change the basic algorithms for different functions. But these functions combined with the logic function blocks can be used to create application specific functionality.

Additional configurable logic means that an extended number of logic circuits are available. Also Move function blocks (MOF, MOL), used for synchronization of boolean signals sent between logics with slow and fast execution, are among the additional configurable logic circuits.

## 6.2 Inverter function block (INV)

The inverter function block INV has one input and one output, where the output is in inverse ratio to the input.

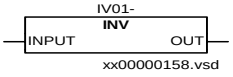


**Table 33: Input signals for the INV (IVnn-) function block**

| Signal | Description |
|---|---|
| INPUT | Logic INV-Input to INV gate |

Path in local HMI: ServiceReport/Functions/INV

**Table 34: Output signals for the INV (IVnn-) function block**

| Signal | Description |
|---|---|
| OUT | Logic INV-Output from INV gate |

## 6.3 OR function block (OR)

The OR function is used to form general combinatory expressions with boolean variables. The OR function block has six inputs and two outputs. One of the outputs is inverted.

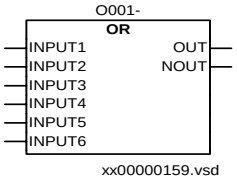


**Table 35: Input signals for the OR (Onnn-) function block**

| Signal | Description |
|---|---|
| INPUT1 | Input 1 to OR gate |
| INPUT2 | Input 2 to OR gate |
| INPUT3 | Input 3 to OR gate |
| INPUT4 | Input 4 to OR gate |
| INPUT5 | Input 5 to OR gate |
| INPUT6 | Input 6 to OR gate |

Path in local HMI: ServiceReport/Functions/OR1n

**Table 36: Output signals for the OR (Onnn-) function block**

| Signal | Description |
|---|---|
| OUT | Output from OR gate |
| NOUT | Inverted output from OR gate |

## 6.4 AND function block (AND)

The AND function is used to form general combinatory expressions with boolean variables.The AND function block has four inputs and two outputs. One of the inputs and one of the outputs are inverted.

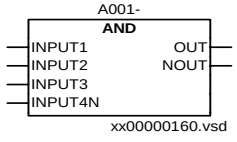


**Table 37: Input signals for the AND (Annn-) function block**

| Signal | Description |
|---|---|
| INPUT1 | Input 1 to AND gate |
| INPUT2 | Input 2 to AND gate |
| INPUT3 | Input 3 to AND gate |
| INPUT4N | Input 4 (inverted) to AND gate |

Path in local HMI: ServiceReport/Functions/AND1n

**Table 38: Output signals for the AND (Annn-) function block**

| Signal | Description |
|---|---|
| OUT | Output from AND gate |
| NOUT | Inverted output from AND gate |

## 6.5 Timer function block (TM)

The function block TM timer has drop-out and pick-up delayed outputs related to the input signal. The timer has a settable time delay (parameter T).

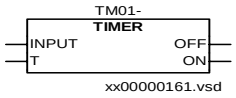


**Table 39: Input signals for the TIMER (TMnn-) function block**

| Signal | Description |
|---|---|
| INPUT | Input to timer |
| T | Time value. See setting parameters |

Path in local HMI: ServiceReport/Functions/Timer

**Table 40: Output signals for the TIMER (TMnn-) function block**

| Signal | Description |
|---|---|
| OFF | Output from timer, drop-out delayed |
| ON | Output from timer , pick-up delayed |

### 6.5.1 Setting parameters

**Table 41: Setting parameters for the Timer (TMnn-) function**

| Parameter | Range | Default | Unit | Description |
|---|---|---|---|---|
| T | 0.000-60.000<br>Step: 0.010 | 0.000 | s | Delay for timer nn. Can only be set from CAP configuration tool. |

## 6.6 Timer long function block (TL)

The function block TL timer with extended maximum time delay at pick-up and at drop-out, is identical with the TM timer. The difference is the longer time delay.

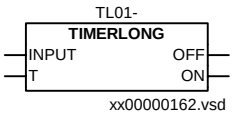


**Table 42: Input signals for the TIMERLONG (TLnn-) function block**

| Signal | Description |
|---|---|
| INPUT | Input to long timer |
| T | Time value. See setting parameters |

Path in local HMI: ServiceReport/Functions/TimerLong

**Table 43: Output signals for the TIMERLONG (TLnn-) function block**

| Signal | Description |
|---|---|
| OFF | Output from long timer, drop-out delayed |
| ON | Output from long timer, pick-up delayed |

### 6.6.1 Setting parameters

**Table 44: Setting parameters for the TimerLong (TLnn-) function**

| Parameter | Range | Default | Unit | Description |
|---|---|---|---|---|
| T | 0.0-90000.0<br>Step:0.1 | 0.0 | s | Delay for TLnn function. Can only be set from CAP configuration tool. |

## 6.7 Pulse timer function block (TP)

The pulse function can be used, for example, for pulse extensions or limiting of operation of outputs. The pulse timer TP has a settable length.

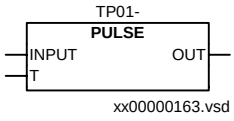


**Table 45: Input signals for the TP (TPnn-) function block**

| Signal | Description |
|---|---|
| INPUT | Input to pulse timer |
| T | Pulse length. See setting parameters |

Path in local HMI: ServiceReport/Functions/Pulsen

**Table 46: Output signals for the TP (TPnn-) function block**

| Signal | Description |
|---|---|
| OUT | Output from pulse timer |

### 6.7.1 Setting parameters

**Table 47: Setting parameters for the Pulse (TPnn-) function**

| Parameter | Range | Default | Unit | Description |
|---|---|---|---|---|
| T | 0.000-60.000<br>Step:0.010 | 0.010 | s | Pulse length. Can only be set from CAP configuration tool. |

## 6.8 Extended length pulse function block (TQ)

The function block TQ pulse timer with extended maximum pulse length, is identical with the TP pulse timer. The difference is the longer pulse length.

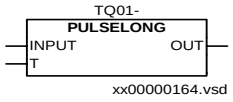


**Table 48: Input signals for the PULSELONG (TQnn-) function block**

| Signal | Description |
|---|---|
| INPUT | Input to pulse long timer |
| T | Pulse length. See setting parameters |

Path in local HMI: ServiceReport/Functions/pulseLongn

**Table 49: Output signals for the PULSELONG (TQnn-) function block**

| Signal | Description |
|---|---|
| OUT | Output from pulse long timer |

### 6.8.1 Setting parameters

**Table 50: Setting parameters for the PulseLong (TQnn-) function**

| Parameter | Range | Default | Unit | Description |
|---|---|---|---|---|
| T | 0.0-90000.0<br>Step: 0.1 | 0.0 | s | Pulse length. Can only be set from CAP configuration tool. |

## 6.9 Exclusive OR function block (XO)

The exclusive OR function XOR is used to generate combinatory expressions with boolean variables. The function block XOR has two inputs and two outputs. One of the outputs is inverted. The output signal is 1 if the input signals are different and 0 if they are equal.

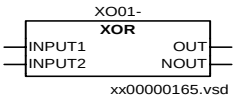


**Table 51: Input signals for the XOR (XOnn-) function block**

| Signal | Description |
|---|---|
| INPUT1 | Input 1 to XOR gate |
| INPUT2 | Input 2 to XOR gate |

Path in local HMI: ServiceReport/Functions/XORn

**Table 52: Output signals for the XOR (XOnn-) function block**

| Signal | Description |
|---|---|
| OUT | Output from XOR gate |
| NOUT | Inverted output from XOR gate |

## 6.10 Set-reset function block (SR)

The Set-Reset (SR) function is a flip-flop that can set or reset an output from two inputs respectively. Each SR function block has two outputs, where one is inverted.

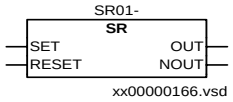


**Table 53: Input signals for the SR (SRnn-) function block**

| Signal | Description |
|---|---|
| SET | Input to SR flip-flop |
| RESET | Input to SR flip-flop |

Path in local HMI: ServiceReport/Functions/SR

**Table 54: Output signals for the SR (SRnn-) function block**

| Signal | Description |
|---|---|
| OUT | Output from SR flip-flop |
| NOUT | Inverted output from SR flip-flop |

## 6.11 Set-reset with memory function block (SM)

The Set-Reset function SM is a flip-flop with memory that can set or reset an output from two inputs respectively. Each SM function block has two outputs, where one is inverted. The memory setting controls if the flip-flop after a power interruption will return the state it had before or if it will be reset.

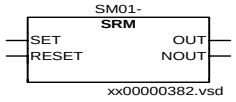


**Table 55: Input signals for the SRM (SMnn-) function block**

| Signal | Description |
|---|---|
| SET | Input to SRM flip-flop |
| RESET | Input to SRM flip-flop |

Path in local HMI: ServiceReport/Functions/SRWithMem1/FuncOutputs

**Table 56: Output signals for the SRM (SMnn-) function block**

| Signal | Description |
|---|---|
| OUT | Output from SRM flip-flop |
| NOUT | Inverted output from SRM flip-flop |

Path in local HMI: Settings/Function/Groupn/SRWithMem1/SRMem01/MemoryFunct

**Table 57: Setting parameters for the SRM (SMnn-) function**

| Parameter | Range | Default | Unit | Description |
|---|---|---|---|---|
| Memory | Off/On | Off | - | Operating mode of the memory function |

## 6.12 Controllable gate function block (GT)

The GT function block is used for controlling if a signal should be able to pass from the input to the output or not depending on a setting.

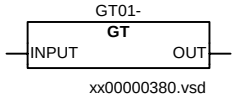


**Table 58: Input signals for the GT (GTnn-) function block**

| Signal | Description |
|---|---|
| INPUT | Input to gate |

Path in local HMI: ServiceReport/Functions/ControlGates1/FuncOutputs

**Table 59: Output signals for the GT (GTnn-) function block**

| Signal | Description |
|---|---|
| Out | Output from gate |

### 6.12.1 Setting parameters

Path in local HMI: Settings/Functions/Groupn/ContrGates1/Gaten

**Table 60: Setting parameters for the GT (GTnn-) function**

| Parameter | Range | Default | Unit | Description |
|---|---|---|---|---|
| Operation | Off/On | Off | - | Operating mode for GTn function |

## 6.13 Settable timer function block (TS)

The function block TS timer has outputs for delayed input signal at drop-out and at pick-up. The timer has a settable time delay. It also has an Operation setting On, Off that controls the operation of the timer.

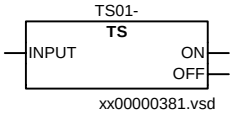


**Table 61: Input signals for the TS (TSnn-) function block**

| Signal | Description |
|---|---|
| INPUT | Input to timer |

Path in local HMI: ServiceReport/Functions/TimerSet1/FuncOutputs

**Table 62: Output signals for the TS (TSnn-) function block**

| Signal | Description |
|---|---|
| ON | Output from timer, pick-up delayed |
| OFF | Output from timer, drop-out delayed |

### 6.13.1 Setting parameters

Path in local HMI: Settings/Functions/Group1/TimerSet1/TimerSetnn

**Table 63: Setting parameters for the TS (TSn-) function**

| Parameter | Range | Default | Unit | Description |
|---|---|---|---|---|
| Operation | Off/On | Off | - | Operating mode for TSn function |
| T | 0.00-60.00<br>Step: 0.01 | 0.00 | s | Delay for settable timer n |

## 6.14 Move first function block (MOF)

The Move function block MOF is put first in the slow logic and is used for signals coming from fast logic into the slow logic. The MOF function block is only a temporary storage for the signals and does not change any value between input and output.

### 6.14.1 Function block

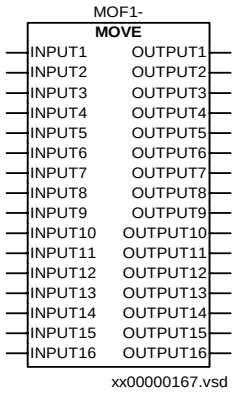


**Table 64: Input signals for the MOFx function block**

| Signal | Description |
|---|---|
| INPUTn | Input n (n=1-16) to MOFx |

Use CAP configuration tool to see status of the output signals.

**Table 65: Output signals for the MOFx function block**

| Signal | Description |
|---|---|
| OUTPUTn | Output n (n=1-16) from MOFx |

## 6.15 Move last function block (MOL)

The Move function block MOL is put last in the slow logic and is used for signals going out from the slow logic to the fast logic. The MOL function block is only a temporary storage for the signals and does not change any value between input and output.

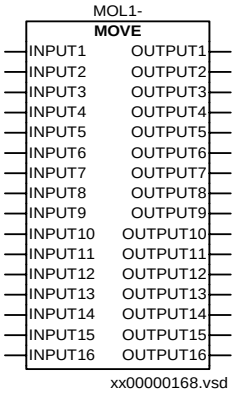


**Table 66: Input signals for the MOLx function block**

| Signal | Description |
|---|---|
| INPUTn | Input n (n=1-16) to MOLx |

Use CAP configuration tool to see status of the output signals.

**Table 67: Output signals for the MOLx function block**

| Signal | Description |
|---|---|
| OUTPUTn | Output n (n=1-16) from MOLx |

## 6.16 Technical data

**Table 68: CL1 - Configurable blocks as basic**

| Update rate | Block | Availability |
|---|---|---|
| 10 ms | AND | 30 gates |
| | OR | 60 gates |
| | INV | 20 inverters |
| | SM | 5 flip-flops |
| | GT | 5 gates |
| | TS | 5 timers |
| 200 ms | SR | 5 flip-flops |
| | XOR | 39 gates |

**Table 69: Available timer function blocks as basic**

| Block | Availability | Setting range | Accuracy |
|---|---|---|---|
| TM | 10 timers | 0.000-60.000 s in steps of 1 ms | ± 0.5% ± 10 ms |
| TP | 10 pulse timers | 0.000-60.000 s in steps of 1 ms | ± 0.5% ± 10 ms |
| TL | 10 timers | 0.0-90000.0 s in steps of 0.1 s | ± 0.5% ± 10 ms |
| TQ | 10 puls timers | 0.0-90000.0 s in steps of 0.1 s | ± 0.5% ± 10 ms |

**Table 70: CL2 - Additional configurable logic blocks**

| Update rate | Block | Availability |
|---|---|---|
| 200 ms | AND | 239 gates |
| | OR | 159 gates |
| | INV | 59 inverters |
| | MOF | 3 registers |
| | MOL | 3 registers |

**Table 71: Additional timer function blocks**

| Block | Availability | Setting range | Accuracy |
|---|---|---|---|
| TP | 40 pulse timers | 0.000-60.000 s in steps of 1 ms | ± 0.5% ± 10 ms |

# 7 Blocking of signals during test (BST)

## 7.1 Application

The protection and control terminals have a complex configuration with many included functions. To make the testing procedure easier, the terminals include the feature to individually block a single, several or all functions.

This means that it is possible to see when a function is activated or trips. It also enables the user to follow the operation of several related functions to check correct functionality and to check parts of the configuration etc.

## 7.2 Function block

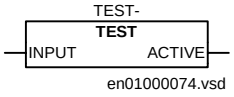


## 7.3 Input and output signals

**Table 72: Input signals for the Test (TEST-) function block**

| Signal | Description |
|---|---|
| INPUT | Sets terminal in test mode when active |

Path in local HMI: ServiceReport/Functions/Test

**Table 73: Output signals for the Test (TEST-) function block**

| Signal | Description |
|---|---|
| ACTIVE | Terminal in test mode |

# Chapter 4 Line distance

## About this chapter

This chapter describes the line impedance functions in the terminal.

# 1 Distance protection (ZM)

## 1.1 Application

The ZM distance protection function provides fast and reliable protection for overhead lines and power cables in all kinds of power networks. For each independent distance protection zone, full scheme design provides continuous measurement of impedance separately in three independent phase-to-phase measuring loops as well as in three independent phase-to-earth measuring loops.

Phase-to-phase distance protection is suitable as a basic protection function against two- and three-phase faults in all kinds of networks, regardless of the treatment of the neutral point. Independent setting of the reach in the reactive and the resistive direction for each zone separately, makes it possible to create fast and selective short circuit protection in power systems.

Phase-to-earth distance protection serves as basic earth fault protection in networks with directly or low impedance earthed networks. Together with the independent phase preference logic, it also serves as selective protection function at cross-country faults in isolated or resonantly earthed networks.

Independent reactive reach setting for phase-to-phase and for phase-to-earth measurement secures high selectivity in networks with different protective relays used for short-circuit and earth-fault protection.

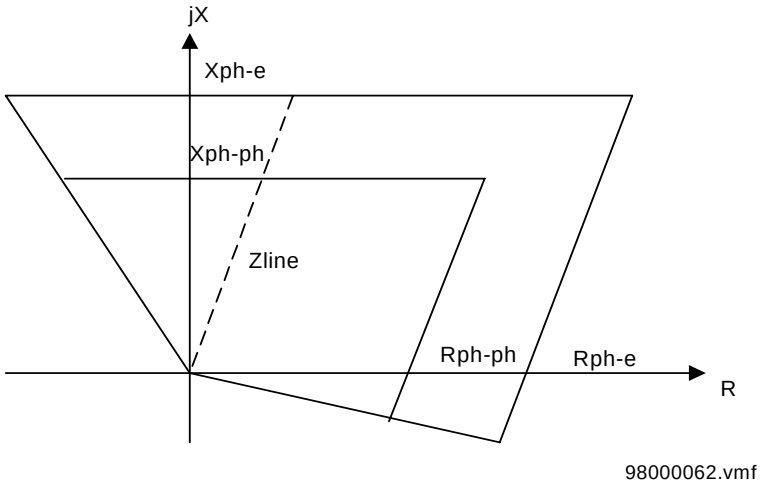


Where:

$X_{ph-e}$ = reactive reach for ph-e faults

$X_{ph-ph}$ = reactive reach for ph-ph faults

$R_{ph-e}$ = resistive reach for ph-e faults

$R_{ph-ph}$ = resistive reach for ph-ph faults

$Z_{line}$ = line impedance

*Figure 15: Schematic presentation of the operating characteristic for one distance protection zone in forward direction*

The distance protection zones can operate, independently of each other, in directional (forward or reverse) or non-directional mode. This makes it suitable, together with different communication schemes, for the protection of power lines and cables in complex network configurations, such as double-circuit, parallel lines, multiterminal lines, etc. Zone one, two and three can issue phase selective signals, such as start and trip.

The additional distance protection zones four and five have the same basic functionality as zone one to three, but lack the possibility of issuing phase selective output signals.

Distance protection zone five has shorter operating time than other zones, but also higher transient overreach. It should generally be used as a check zone together with the SOTF switch onto fault function or as a time delayed zone with time delay set longer than 100ms.

Basic distance protection function is generally suitable for use in non-compensated networks.

## 1.2 Functionality

Separate digital signal processors calculate the impedance as seen for different measuring loops in different distance protection zones. The results are updated each millisecond, separately for all measuring loops and each distance protection zone. Measurement of the impedance for each loop follows the differential equation, which considers complete line replica impedance, as presented schematically in figure 16.

$$u(t) = (R_l + R_f) \cdot i(t) + \frac{X_l}{\omega} \cdot \frac{\Delta i(t)}{\Delta t}$$

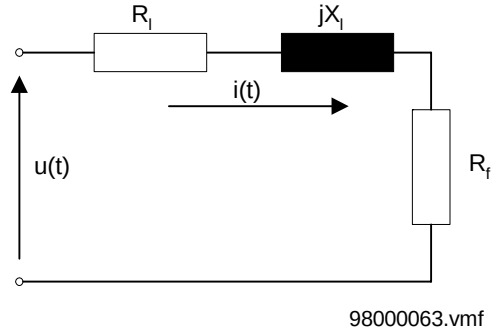


Where:

$R_l$ = line resistance

$R_f$ = fault resistance

$X_l$ = line reactance

$\omega$ = $2\pi f$

f = frequency

*Figure 16: Schematic presentation of impedance measuring principle.*

Settings of all line parameters, such as positive sequence resistance and reactance as well as zero-sequence resistance and reactance, together with expected fault resistance for phase-to-phase and phase-to-earth faults, are independent for each zone. The operating characteristic is thus automatically adjusted to the line characteristic angle, if the simplified operating characteristic has not been especially requested. The earth-return compensation factor for the earth-fault measurement is calculated automatically by the terminal itself.

Voltage polarization for directional measurement uses continuous calculation and updating of the positive sequence voltage for each measuring loop separately. This secures correct directionality of the protection at different evolving faults within the complex network configurations. A memory retaining the pre-fault positive-sequence voltage secures reliable directional operation at close-up three-phase faults.

The distance protection function blocks are independent of each other for each zone. Each function block comprises a number of different functional inputs and outputs, which are freely configurable to different external functions, logic gates, timers and binary inputs and outputs. This makes it possible to influence the operation of the complete measuring zone or only its tripping function by the operation of fuse-failure function, power swing detection function, etc.

## 1.3 Function block, zone 1- 3

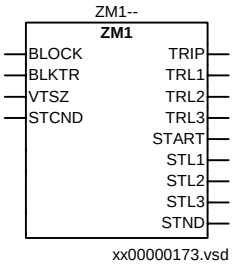


*Figure 17: ZM1 function block for single, two and/or three phase tripping*

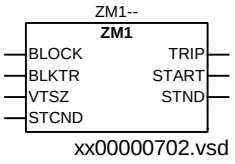


*Figure 18: ZM1 function block for three phase tripping*

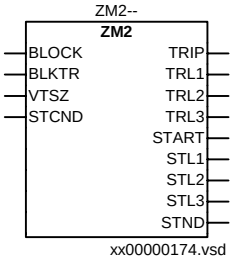


*Figure 19: ZM2 function block for single, two and/or three phase tripping*

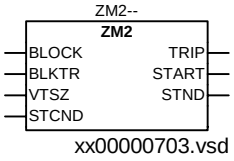


*Figure 20: ZM2 function block for three phase tripping*

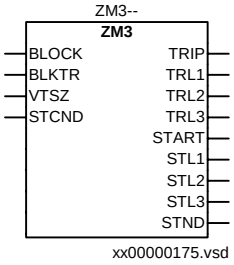


*Figure 21: ZM3 function block for single, two and/or three phase tripping*

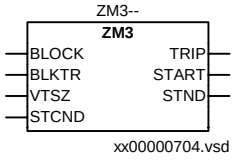


*Figure 22: ZM3 function block for three phase tripping*

## 1.4 Function block, zone 4

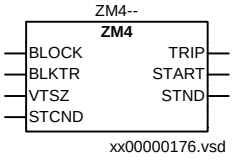


*Figure 23: ZM4 function block*

## 1.5 Function block, zone 5

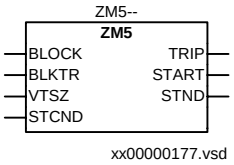


*Figure 24: ZM5 function block*

## 1.6 Logic diagram

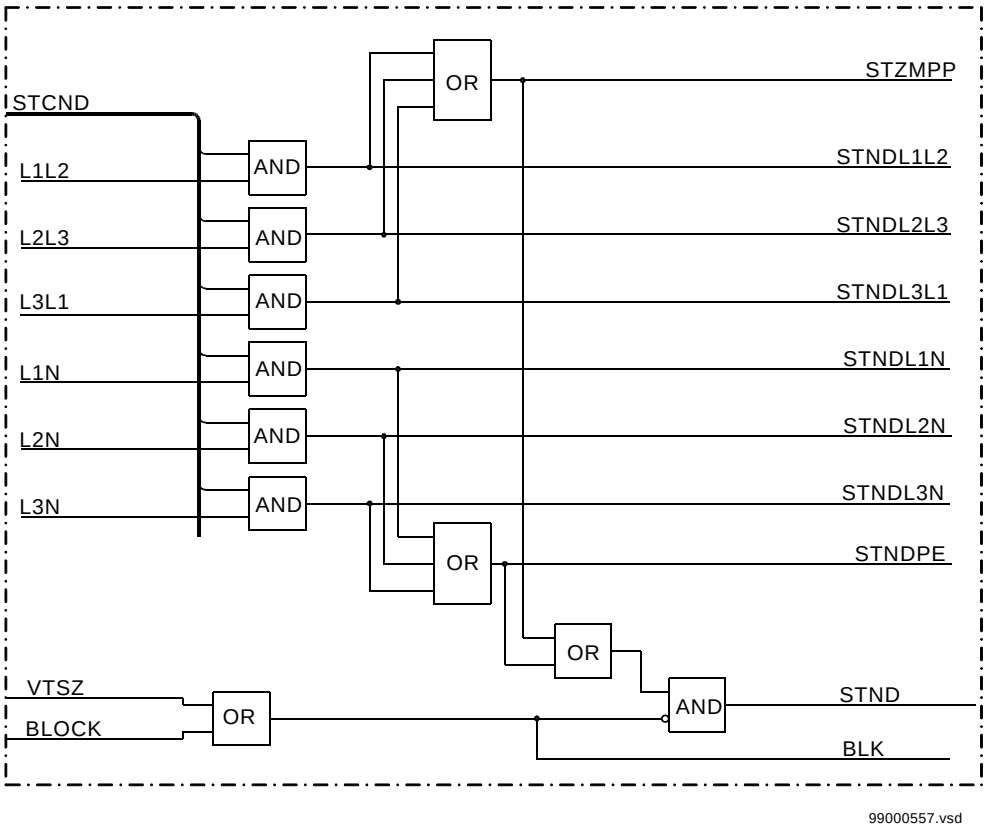


*Figure 25: Conditioning by a group functional input signal ZM1--STCND*

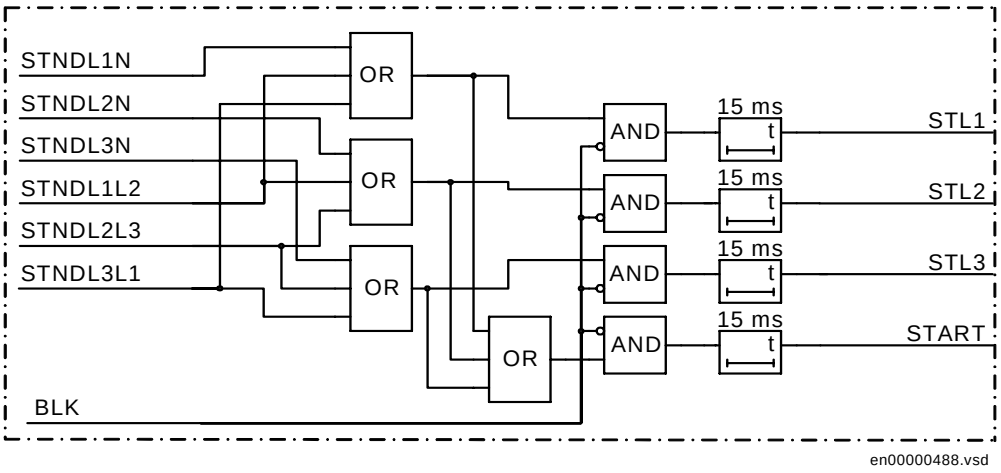


*Figure 26: Composition of starting signals in non-directional operating mode*

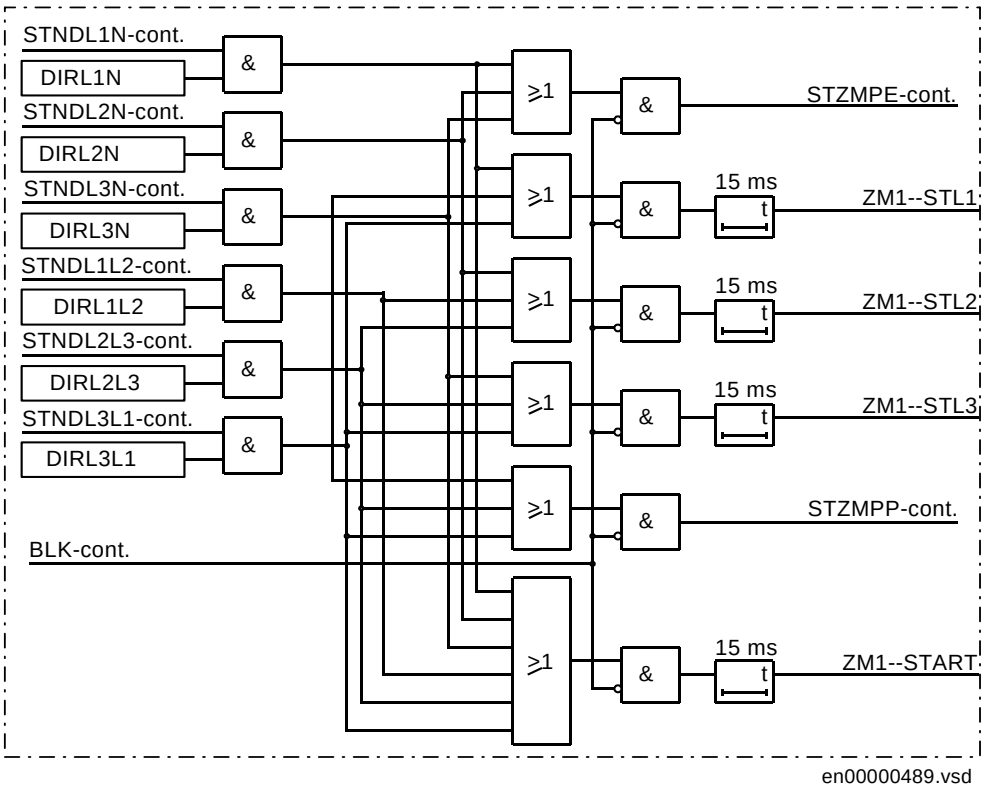


*Figure 27: Composition of starting signals in directional operating mode*

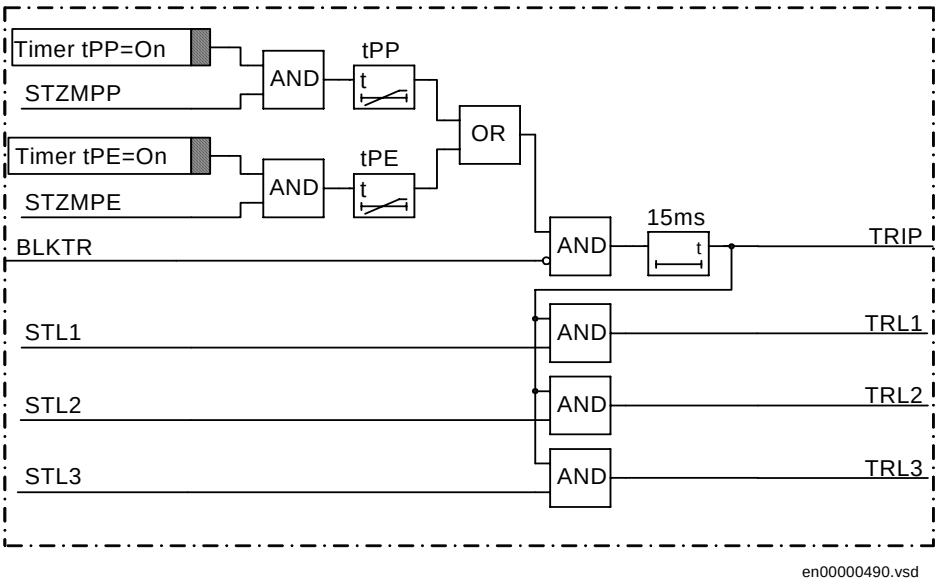


*Figure 28: Tripping logic for the distance protection zone one*

## 1.7 Input and output signals, zone 1-3

**Table 74: Input signals for the ZM1 (ZM1--), ZM2 (ZM2--), ZM3 (ZM3--) function blocks**

| Signal | Description |
|---|---|
| BLOCK | Blocks the operation of distance protection zone n |
| BLKTR | Blocks tripping outputs of distance protection zone n |
| VTSZ | Blocks the operation of distance protection zone n - connected to fuse failure signal FUSE-VTSZ |
| STCND | External starting condition for the operation of the distance protection zone n. Connected to one of the phase selection signals PHS--STCNDI, PHS--STCNDZ or to the general fault criteria signal GFC--STCND |

Path in local HMI: ServiceReport/Functions/Impedance/Zonen/FuncOutputs

**Table 75: Output signals for the ZM1 (ZM1--), ZM2 (ZM2--), ZM3 (ZM3--) function blocks**

| Signal | Description |
|---|---|
| TRIP | Trip by distance protection zone n |
| TRL1 | Trip by distance protection zone n in phase L1 (available only with single pole tripping unit) |
| TRL2 | Trip by distance protection zone n in phase L2 (available only with single pole tripping unit) |
| TRL3 | Trip by distance protection zone n in phase L3 (available only with single pole tripping unit) |
| START | Start of (directional) distance protection zone n |
| STL1 | Start of (directional) distance protection zone n in phase L1 (available only with single pole tripping unit) |
| STL2 | Start of (directional) distance protection zone n in phase L2 (available only with single pole tripping unit) |
| STL3 | Start of (directional) distance protection zone n in phase L3 (available only with single pole tripping unit) |
| STND | Non-directional start of distance protection zone n |

## 1.8 Input and output signals, zone 4

**Table 76: Input signals for the ZM4 (ZM4--) function block**

| Signal | Description |
|---|---|
| BLOCK | Blocks the operation of distance protection zone 4 |
| BLKTR | Blocks tripping outputs of distance protection zone 4 |
| VTSZ | Blocks the operation of distance protection zone 4 - connected to fuse failure signal FUSE-VTSZ |
| STCND | External starting condition for the operation of the distance protection zone n. Connected to one of the phase selection signals PHS--STCNDI, PHS--STCNDZ or to the general fault criteria signal GFC--STCND |

Path in local HMI: ServiceReport/Functions/Impedance/Zone4/FuncOutputs

**Table 77: Output signals for the ZM4 (ZM4--) function block**

| Signal: | Description: |
|---|---|
| TRIP | Trip by distance protection zone 4 |
| START | Start of directional distance protection zone 4 |
| STND | Start of non-directional distance protection zone 4 |

## 1.9 Input and output signals, zone 5

**Table 78: Input signals for the ZM5 (ZM5--) function block**

| Signal | Description |
|---|---|
| BLOCK | Blocks the operation of distance protection zone 5 |
| BLKTR | Blocks tripping outputs of distance protection zone 5 |
| VTSZ | Blocks the operation of distance protection zone 5 - connected to fuse failure signal FUSE-VTSZ |
| STCND | External starting condition for the operation of the distance protection zone n. Connected to one of the phase selection signals PHS--STCNDI, PHS--STCNDZ or to the general fault criteria signal GFC--STCND |

Path in local HMI: ServiceReport/Functions/Impedance/Zone5/FuncOutputs

**Table 79: Output signals for the ZM5 (ZM5--) function block**

| Signal | Description |
|---|---|
| TRIP | Trip by distance protection zone 5 |
| START | Start of directional distance protection zone 5 |
| STND | Start of non-directional distance protection zone 5 |

## 1.10 Setting parameters, general

Setting parameters for the resistive and the reactive reach are presented for the terminals with rated current Ir = 1A. All impedance values should be divided by 5 for the terminals with rated current Ir = 5A.

Path in local HMI: Settings/Functions/Group n/Impedance/General

**Table 80: General setting parameters ZM1 - ZM**

| Parameter | Range | Default | Unit | Description |
|---|---|---|---|---|
| IMinOp | 10-30<br>Step: 1 | 20 | % of I1b | Minimum operate current |

## 1.11 Setting parameters, zone 1-3

Path in local HMI: Settings/Functions/Groupn/Impedance/Zone1-3

**Table 81: General setting parameters for ZM1 - 3 (ZMn--) function**

| Parameter | Range | Default | Unit | Description |
|---|---|---|---|---|
| Operation | Off, NonDir, Forward, Reverse | Off | - | Operating mode and directionality for ZMn function |

Path in local HMI: Settings/Functions/Groupn/Impedance/Zone1-3

**Table 82: Settings for the phase-to-phase measurement ZM1 - 3 (ZMn--) function**

| Parameter | Range | Unit | Default | Description |
|---|---|---|---|---|
| Operation PP | Off, On | - | Off | Operating mode for ZMn function for Ph-Ph faults |
| X1PP | 0.10-400.00<br>Step: 0.01 | ohm/ph | 10.00 | Positive sequence reactive reach of distance protection zone *n* for Ph-Ph faults |
| R1PP | 0.10-400.00<br>Step: 0.01 | ohm/ph | 10.00 | Positive sequence line resistance included in distance protection zone *n* for Ph-Ph faults |
| RFPP | 0.10-400.00<br>Step: 0.01 | ohm/loop | 10.00 | Resistive reach of distance protection zone *n* for Ph-Ph faults |
| Timer t1PP<br>Timer t2PP<br>Timer t3PP | Off, On | - | Off | Operating mode of time delayed trip for the distance protection zone *n* for Ph-Ph faults |
| t1PP<br>t2PP<br>t3PP | 0.000 - 60.000<br>Step: 0.001 | s | 0.000 | Time delayed trip operation of the distance protection zone *n* for Ph-Ph faults |

## 1.12 Setting parameters, zone 4

Path in local HMI: Settings/Functions/Groupn/Impedance/Zone4

**Table 83: General zone setting parameters ZM4 (ZMn--) function**

| Parameter | Range | Default | Unit | Description |
|---|---|---|---|---|
| Operation | Off, NoneDir, Forward, Reverse | Off | - | Operating mode and directionality for ZM4 |

Path in local HMI: Settings/Functions/Groupn/Impedance/Zone4

**Table 84: Settings for the phase-to-phase measurement ZM4 (ZMn--) function**

| Parameter | Range | Default | Unit | Description |
|---|---|---|---|---|
| Operation PP | Off, On | Off | - | Operating mode for ZM4 for Ph-Ph faults |

| Parameter | Range | Default | Unit | Description |
|---|---|---|---|---|
| X1PP | 0.10 - 400.00 Step:0.01 | 10.00 | ohm/ph | Positive sequence reactive reach of distance protection zone 4 for Ph-Ph faults |
| R1PP | 0.10 - 400.00 Step: 0.01 | 10.00 | ohm/ph | Positive sequence line resistance included in distance protection zone 4 for Ph-Ph faults |
| RFPP | 0.10 - 400.00 Step: 0.01 | 10.00 | ohm/loop | Resistive reach of distance protection zone 4 for Ph-Ph faults |
| Timer t4PP | Off, On | On | - | Operating mode of time delayed trip for the distance protection zone 4 for Ph-Ph faults |
| t4PP | 0.000 - 60.000 Step: 0.001 | 0.000 | s | Time delayed trip operation of the distance protection zone 4 for Ph-Ph faults |

Path in local HMI: Settings/Functions/Group n/Impedance/Zone4

**Table 85: Settings for the phase-to-earth measurement ZM4 (ZMn--) function**

| Parameter | Range | Default | Unit | Description |
|---|---|---|---|---|
| Operation PE | Off, On | Off | | Operating mode for ZM4 for Ph-E faults |
| X1PE | 0.10 - 400.00 Step: 0.01 | 10.00 | ohm/ph | Positive sequence reactive reach of distance protection zone 4 for Ph-E faults |
| R1PE | 0.10 - 400.00 Step: 0.01 | 10.00 | ohm/ph | Positive sequence line resistance included in distance protection zone 4 for Ph-E faults |
| X0PE | 0.10 - 1200.00 Step:0.01 | 10.00 | ohm/ph | Zero sequence line reactance included in distance protection zone 4 for Ph-E faults |
| R0PE | 0.10 - 1200.00 Step:0.01 | 10.00 | ohm/ph | Zero sequence line resistance included in distance protection zone 4 for Ph-E faults |
| RFPE | 0.10 - 400.00 Step: 0.01 | 10.00 | ohm/loop | Resistive reach of distance protection zone 4 for Ph-E faults |
| Timer t4PE | Off, On | On | | Operating mode of time delayed trip for the distance protection zone 4 for Ph-E faults |
| t4PE | 0.000 - 60.000 Step: 0.001 | 0.000 | s | Time delayed trip operation of the distance protection zone 4 for Ph-E faults |

## 1.13 Setting parameters, zone 5

Path in local HMI: Settings/Functions/Groupn/Impedance/Zone5

**Table 86: General setting parameters for ZM5 (ZMn--) function**

| Parameter | Range | Default | Unit | Description |
|---|---|---|---|---|
| Operation | Off, NoneDir, Forward, Reverse | Off | - | Operating mode and directionality for ZM5 |

Path in local HMI: Settings/Functions/Groupn/Impedance/Zone5

**Table 87: Settings for the phase-to-phase measurement ZM5 (ZMn--) function**

| Parameter | Range | Default | Unit | Description |
|---|---|---|---|---|
| Operation PP | Off, On | Off | - | Operating mode for ZM5 for Ph-Ph faults |
| X1PP | 0.10 - 400.00 Step: 0.01 | 10.00 | ohm/ph | Positive sequence reactive reach of distance protection zone 5 for Ph-Ph faults |
| R1PP | 0.10 - 400.00 Step: 0.01 | 10.00 | ohm/ph | Positive sequence line resistance included in distance protection zone 5 for Ph-Ph faults |
| RFPP | 0.10 - 400.00 Step: 0.01 | 10.00 | ohm/loop | Resistive reach of distance protection zone 5 for Ph-Ph faults |
| Timer t5PP | Off, On | On | - | Operating mode of time delayed trip for the distance protection zone 5 for Ph-Ph faults |
| t5PP | 0.000 - 60.000 Step: 0.001 | 0.000 | s | Time delayed trip operation of the distance protection zone 5 for Ph-Ph faults |

Path in local HMI: Settings/Functions/Groupn/Impedance/Zone5

**Table 88: Settings for the phase-to-earth measurement ZM5 (ZMn--)**

| Parameter | Range | Default | Unit | Description |
|---|---|---|---|---|
| Operation PE | Off, On | Off | - | Operating mode for ZM5 for Ph-E faults |
| X1PE | 0.10 - 400.00 Step: 0.01 | 10.00 | ohm/ph | Positive sequence reactive reach of distance protection zone 5 for Ph-E faults |
| R1PE | 0.10 - 400.00 Step: 0.01 | 10.00 | ohm/ph | Positive sequence line resistance included in distance protection zone 5 for Ph-E faults |

| Parameter | Range | Default | Unit | Description |
|---|---|---|---|---|
| X0PE | 0.10 - 1200.00 Step: 0.01 | 10.00 | ohm/ph | Zero sequence line reactance included in distance protection zone 5 for Ph-E faults |
| R0PE | 0.10 - 1200.00 Step: 0.01 | 10.00 | ohm/ph | Zero sequence line resistance included in distance protection zone 5 for Ph-E faults |
| RFPE | 0.10 - 400.00 Step: 0.01 | 10.00 | ohm/loop | Resistive reach of distance protection zone 5 for Ph-E faults |
| Timer t5PE | Off, On | On | - | Operating mode of time delayed trip for the distance protection zone 5 for Ph-E faults |
| t5PE | 0.000 - 60.000 Step: 0.001 | 0.000 | s | Time delayed trip operation of the distance protection zone 5 for Ph-E faults |

## 1.14 Setting parameters, directional measuring element

Setting parameters for the resistive and the reactive reach are presented for the terminals with rated current Ir = 1A. All impedance values should be divided by 5 for the terminals with rated current Ir = 5A.

Path in local HMI: Settings/Functions/Groupn/Impedance/Direction

**Table 89: General setting parameters, ZDIR**

| | | | | |
|---|---|---|---|---|
| ArgDir | 5-45 Step:1 | 15 | degrees | Lower angle of forward direction characteristic |
| ArgNegRes | 90-175 Step:1 | 115 | degrees | Upper angle of forward direction Characteristic |

## 1.15 Technical data

**Table 90: ZM1, 2, 3, 4, 5 - Zone impedance measuring elements**

| Function | | | Value |
|---|---|---|---|
| Operate time | Typical | | 28 ms |
| | Min and max | | Please refer to the separate isochrone diagrams |
| Min. operate current | | | (10-30) % of I1b in steps of 1 % |
| Resetting ratio | | | Typical 110 % |
| Resetting time | | | Typical 40 ms |
| Output signals start and trip | | Zone 1-3 | Three phase<br>Single phase and/or three phase |
| | | Zone 4, 5 | Three phase start and trip |
| Setting accuracy | | | Included in the measuring accuracy |
| Number of zones | | | 3, 4 or 5, direction selectable |

| **Function** | | | **Value** |
|---|---|---|---|
| Impedance setting range at $I_r$ = 1 A (to be divided by 5 at $I_r$ = 5 A) | Reactive reach | Positive-sequence reactance | (0.10-400.00) Ω/phase in steps of 0.01 Ω |
| | | Zero sequence reactance | (0.10-1200.00) Ω/phase in steps of 0.01 Ω |
| | Resistive reach | Positive-sequence resistance | (0.10-400.00) Ω/phase in steps of 0.01 Ω |
| | | Zero sequence resistance | (0.10-1200.00) Ω/phase in steps of 0.01 Ω |
| | Fault resistance | For phase - phase faults | (0.10-400.00) Ω/loop in steps of 0.01 Ω |
| | | For phase-earth faults | (0.10-400.00) Ω/loop in steps of 0.01 Ω |
| Setting range of timers for impedance zones | | | (0.000-60.000) s in steps of 1 ms |
| Static accuracy at 0 degrees and 85 degrees | Voltage range (0.1-1.1) x $U_r$ | | +/- 5 % |
| | Current range (0.5-30) x $I_r$ | | |
| Static angular accuracy at 0 degrees and 85 degrees | Voltage range (0.1-1,1) x $U_r$ | | +/- 5 degrees |
| | Current range (0.5-30) x $I_r$ | | |
| Max dynamic overreach at 85 degrees measured with CVT's 0.5 < SIR < 30 | | | + 5 % |

# 2 Automatic switch onto fault logic (SOTF)

## 2.1 Application

The main purpose of the SOTFswitch-on-to-fault function is to provide high-speed tripping when energizing a power line on to a short-circuit fault on the line.

Automatic initiating of the SOTF function using dead line detection can only be used when the potential transformer is situated on the line-side of the circuit breaker. Initiation using dead line detection is highly recommended for busbar configurations where more than one circuit breaker at one line end can energize the protected line.

Generally, directional or non-directional overreaching distance or overcurrent protection functions are used as the protection functions to be released for direct tripping during the activated time. When line-side potential transformers are used, the use of non-directional protection zones secures switch-on-to-fault tripping for fault situations where directional information can not be established, for example, due to lack of polarizing voltage. Use of non-directional protection also gives fast fault clearance when energizing a bus from the line with a short-circuit fault on the bus.

## 2.2 Functionality

The SOTF function is a logical function built-up from logical elements. It is a complementary function to the distance or overcurrent protection functions.

It is enabled for operation either by the close command to the circuit breaker, by a normally closed auxiliary contact of the circuit breaker, or automatically by the dead line detection. Once enabled, this remains active until one second after the enabling signal has reset. The protection function(s) released for tripping during the activated time can be freely selected from the functions included within the terminal. Pickup of any one of the selected protection functions during the enabled condition will result in an immediate trip output from the SOTF function.

## 2.3 Function block

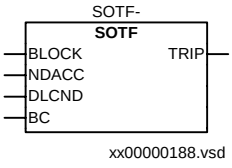

## 2.4 Logic diagram

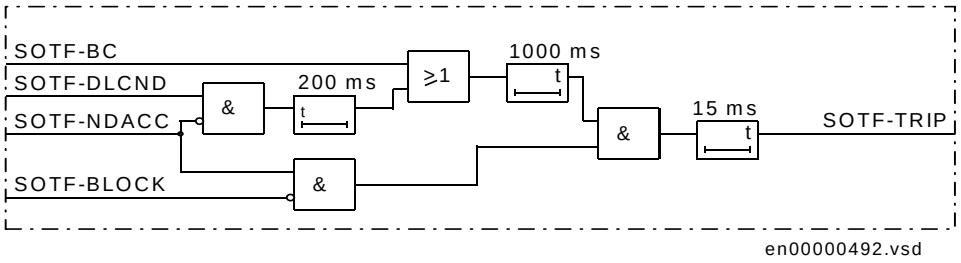


*Figure 29: SOTF function - simplified logic diagram*

## 2.5 Input and output signals

**Table 91: Input signals for the SOTF (SOTF-) function block**

| Signal | Description |
|---|---|
| BLOCK | Blocks function |
| NDACC | Connected to function(s) to be released for immediate tripping when SOTF function is enabled |
| DLCND | Connected to dead line detection function to provide automatic enabling of SOTF function |
| BC | Enabling of SOTF function by circuit breaker close command or normally closed auxiliary contact of the circuit breaker |

Path in local HMI: ServiceReport/Functions/Impedance/ SwitchOntoFlt/FuncOutputs

**Table 92: Output signals for the SOTF (SOTF-) function block**

| Signal | Description |
|---|---|
| TRIP | Trip output |

## 2.6 Setting parameters

Path in local HMI: Settings/Functions/Groupn/Impedance/SwitchOntoFlt

**Table 93: Setting parameters for the automatic switch onto fault logic SOTF (SOTF-) function**

| Parameter | Range | Default | Unit | Description |
|---|---|---|---|---|
| Operation | Off / On | Off | - | Operating mode for SOTF function |

## 2.7 Technical data

**Table 94: SOTF - Automatic switch onto fault function**

| Parameter | Value | Accuracy |
|---|---|---|
| Delay following dead line detection input before SOTF function is automatically enabled | 200 ms | +/-0.5% +/-10 ms |
| Time period after circuit breaker closure in which SOTF function is active | 1000 ms | +/-0.5% +/-10 ms |

# 3 Local acceleration logic (ZCLC)

## 3.1 Application

The main purpose of the ZCLC local acceleration logic is to achieve fast fault clearance for faults anywhere on the whole line for those applications where no communication channel is available.

## 3.2 Functionality

The ZCLC function is a complementary function to the distance protection function.

The local acceleration logic can be enabled for operation in two ways. The first way uses an ‘automatic recloser ready’ signal, either from the internal recloser, or an external recloser. The second way uses loss of load detection. When enabled by either method, the local acceleration logic will produce an immediate output on pickup of the function selected to the method of acceleration enabled.

## 3.3 Function block

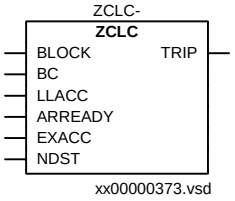

## 3.4 Logic diagram

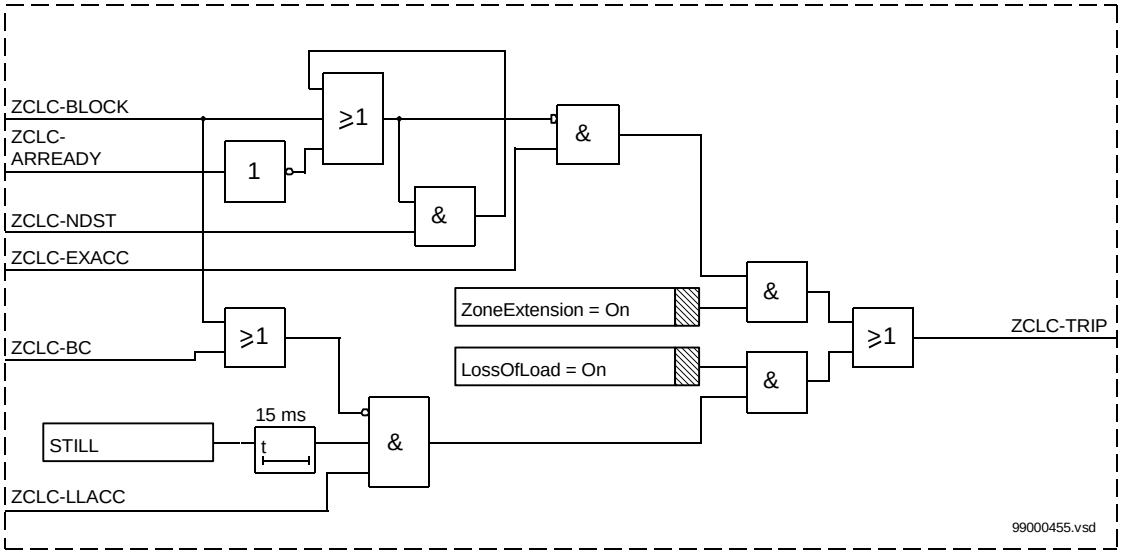


*Figure 30: Simplified logic diagram for the local acceleration logic*

## 3.5 Input and output signals

**Table 95: Input signals for the ZCLC (ZCLC-) function block**

| Signal | Description |
|---|---|
| BLOCK | Blocks function |
| BC | Circuit breaker closed |
| LLACC | Connected to function to be used for tripping at loss of load acceleration |
| ARREADY | Releases function used for zone extension for immediate tripping |
| EXACC | Connected to function to be used for tripping at zone extension |
| NDST | Connected to function to be used to prevent zone extension for its picked-up duration if the release for zone extension is not present when it picks-up |

Path in local HMI: ServiceReport/Functions/Impedance/ComLocal/FuncOutputs

**Table 96: Output signals for the ZCLC (ZCLC-) function block**

| Signal | Description |
|---|---|
| TRIP | Trip output |

## 3.6 Setting parameters

Path in local HMI: Settings/Functions/Groupn/Impedance/ComLocal

**Table 97: Setting parameters for the local acceleration logic ZCLC (ZCLC-) function**

| Parameter | Range | Default | Unit | Description |
|---|---|---|---|---|
| ZoneExtension | Off / On | Off | - | Operating mode for zone extension logic |
| LossOfLoad | Off / On | Off | - | Operating mode for loss of load acceleration logic |

# 4 General fault criteria (GFC)

## 4.1 Application

The GFC general fault criteria function is an independent measuring function. It comprises both impedance and current-based measurement criteria. These can be used separately or at the same time. Its main purpose is to serve as an overall fault detection and phase selection element in all kinds of networks or as an individual underimpedance measuring function. It is not used as a start condition because the distance protection zones utilize full scheme measurement.

For the impedance measurement, the shape of the operating characteristic can be set to prevent operation of the impedance measuring elements for low load impedances, yet at the same time allow coverage of higher fault resistances with remote infeed of fault current. This makes the GFC function especially suited to cases where the fault resistance to be detected exceeds the minimum expected load impedance.

The independent measurement of impedance for each fault loop secures reliable phase selection and correct operation for complex network faults such as simultaneous faults on parallel circuits, evolving faults, etc. Independent reactive reach settings for phase-to-phase and phase-to-ground measurement secure high selectivity in networks with different protective relays used for short-circuit and earth-fault protection.

A possible addition to the GFC function is the optional phase preference logic. Its main purpose is to provide a selective tripping function for cross-country faults in isolated or high impedance-grounded networks.

## 4.2 Functionality

For the impedance-based phase selection, all six fault loops are measured separately and continuously. The reaches are independently settable in the forward and reverse directions, and for phase-to-phase and phase-to-ground faults. The resistive reaches are also independently settable for phase-to-phase and phase-to-ground faults. Preventing impedance element operation due to low load impedances, but at the same time enabling the GFC function to be as sensitive as possible to faults with high fault resistances, is achieved by the inclusion of a facility that allows the resistive reach to be limited within the load impedance area only.

Checks based on the level of residual current determine which loops, i.e. phase-to-ground or phase-to-phase, are evaluated. Selection of the faulted phase(s) is determined by which of the selected loops operate. Operation of a loop occurs when the measured impedance within that loop is within the set boundaries of the characteristic.

For the current-based phase selection, all three phase currents and the residual current are measured continuously, and compared to set values. Assessment of the type of fault is based on the relationship of the measured currents to the set thresholds.

The GFC starting condition (STCND) output will activate the selected loop of the distance protection measuring zone(s) to which it is connected.

The phase preference logic inhibits tripping for single-phase-to-ground faults in isolated and high impedance-grounded networks. It does this by blocking forward and reverse operation until two earth-faults are detected to be within the non-directional characteristic. For such cross-country faults, the logic initiates tripping of the preferred fault based on the selected phase preference. A number of different phase preference combinations are available for selection.

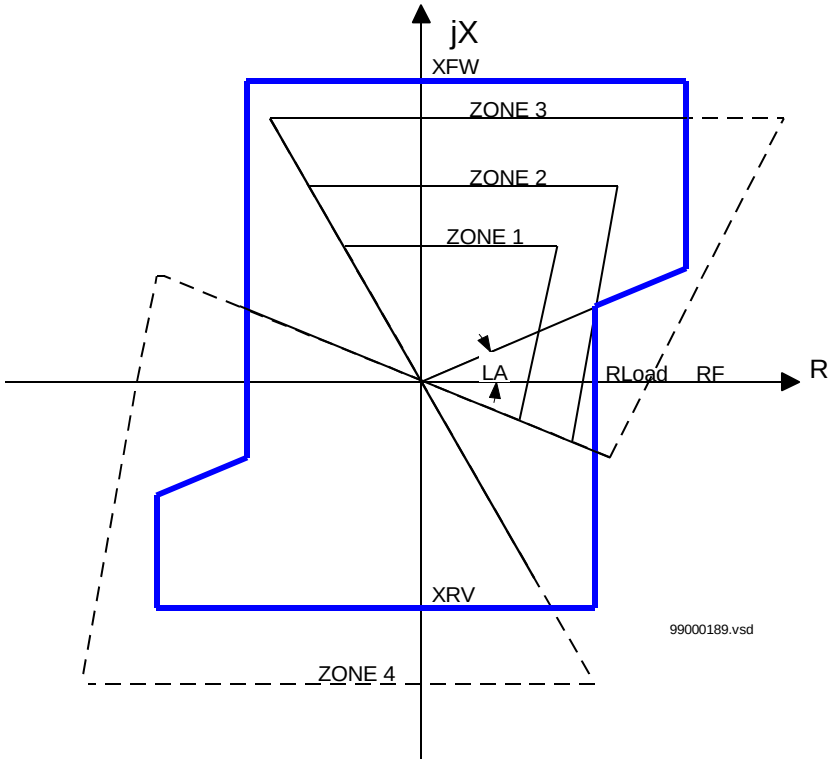


*Figure 31: Operating characteristics of the GFC (impedance measuring principle) and zone measuring elements*

Figure 31 presents principally a shaped operate characteristic for an impedance based GFC function. Different designations have the following meaning:

- XFW: reactive reach in forward direction
- XRV: reactive reach in reverse direction
- RF: resistive reach within the unlimited area
- RLoad: resistive reach restricted by the minimum load impedance
- LA: expected load impedance angle

## 4.3 Function block

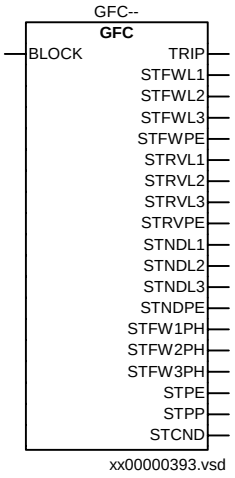


## 4.4 Logic diagram

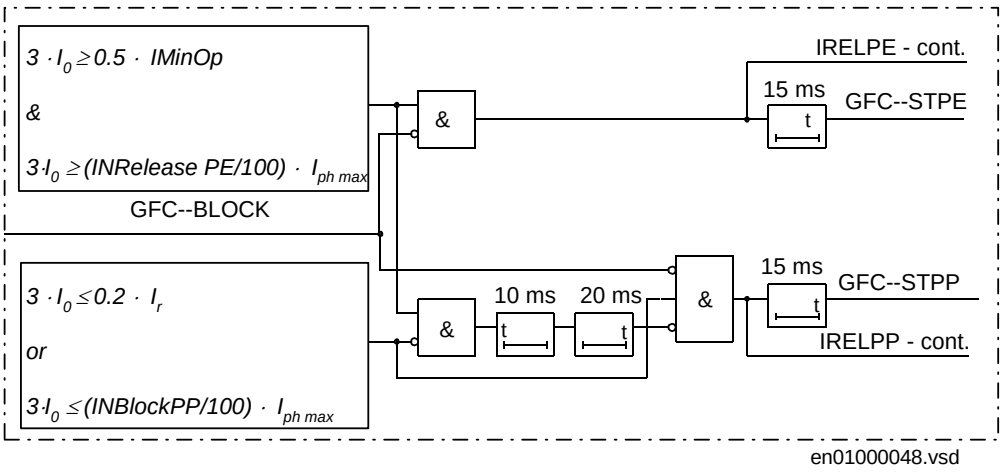


*Figure 32: Detection of ph-E and ph-ph fault conditions*

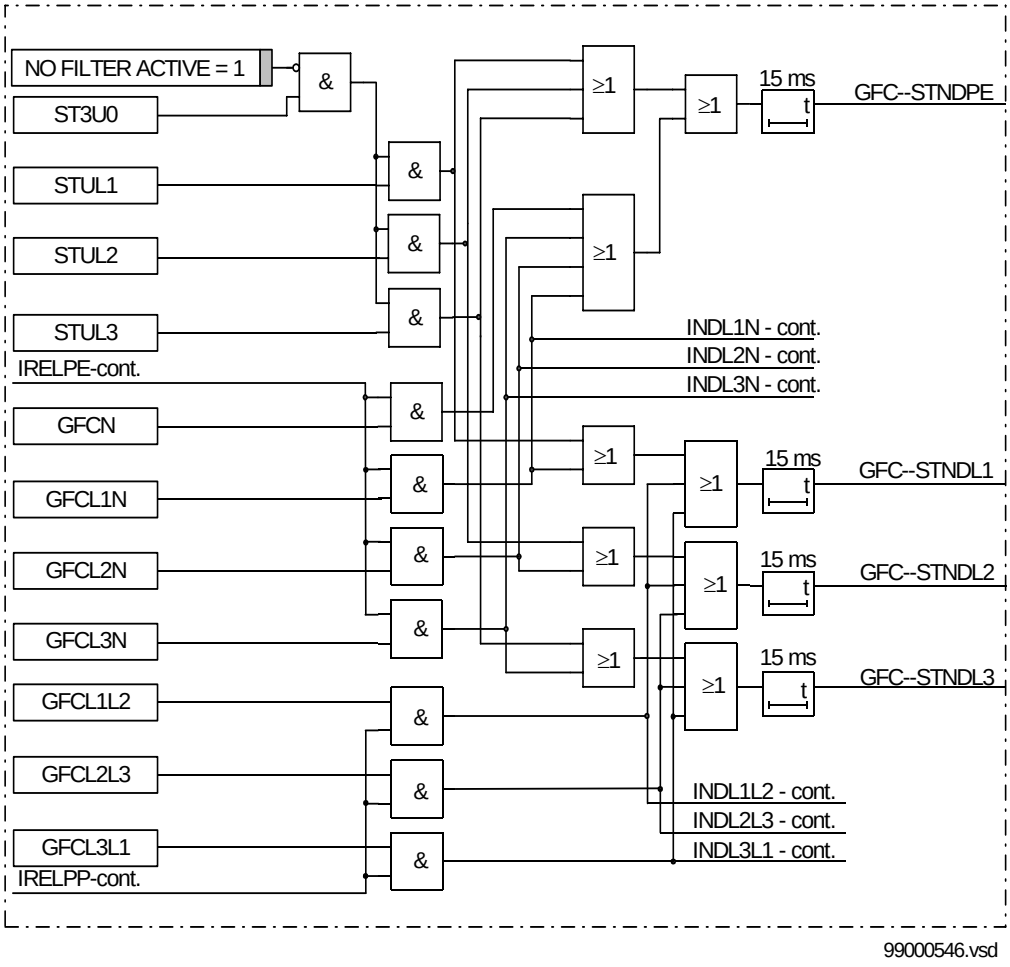


*Figure 33: Composition of non-directional GFC signals with phase preference logic*

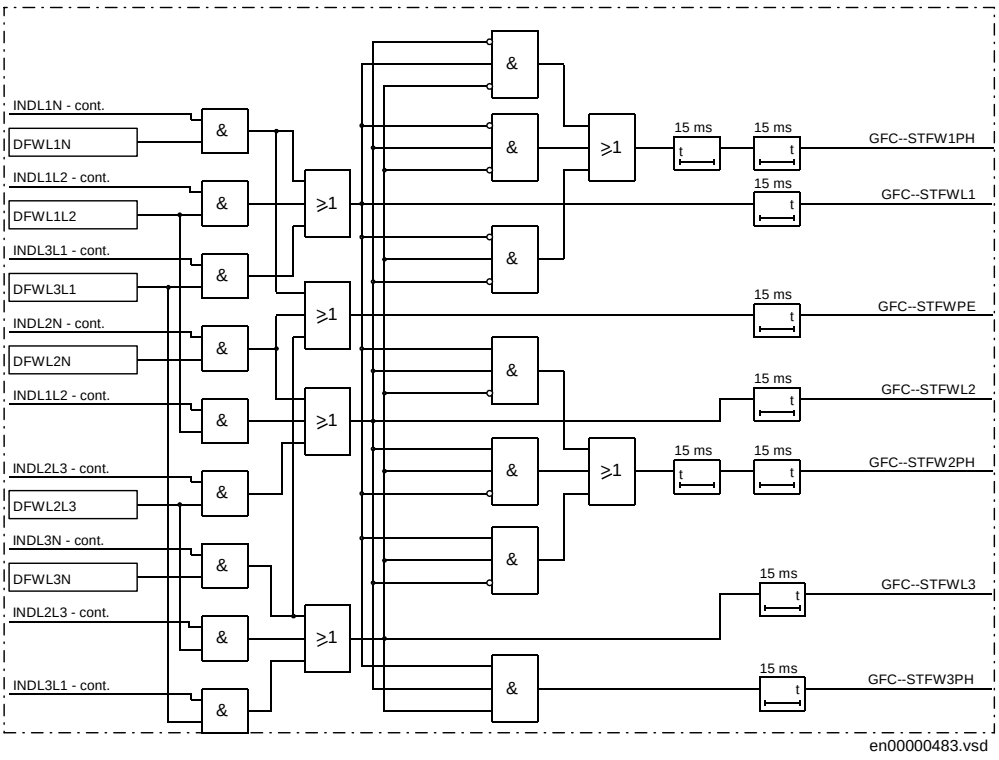


*Figure 34: Composition of forward directed GFC signals.*

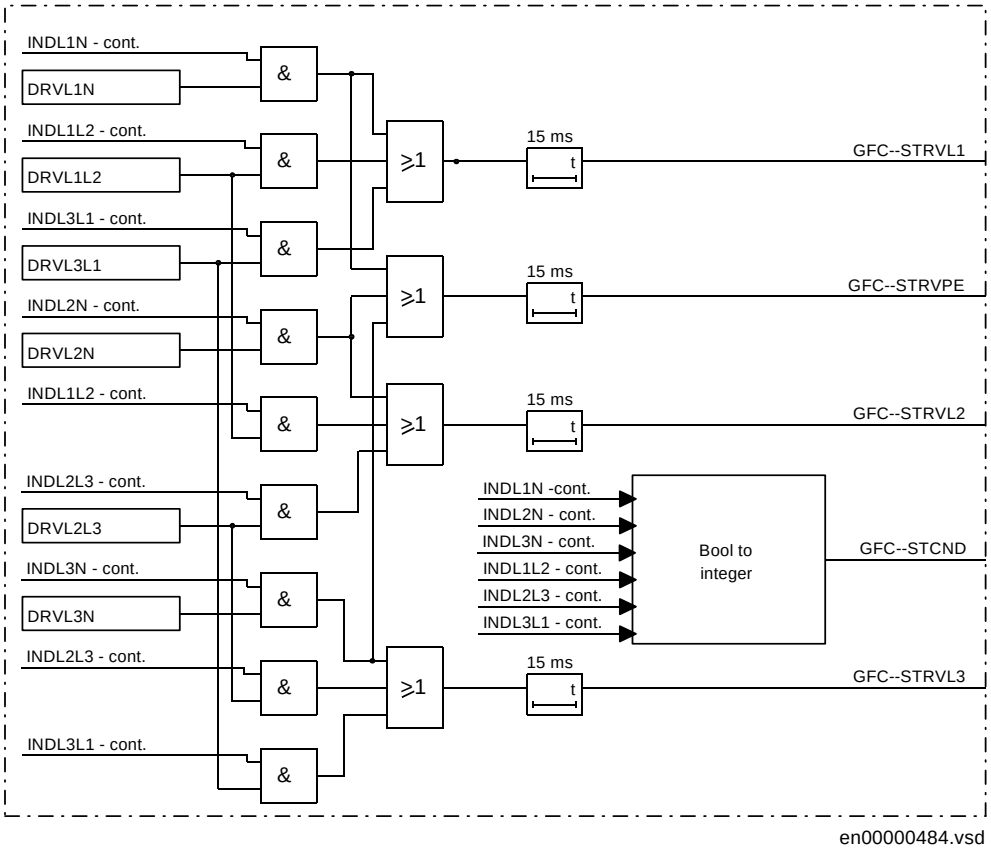


*Figure 35: Composition of reverse directed GFC signals and measured impedance related zone starting conditions*

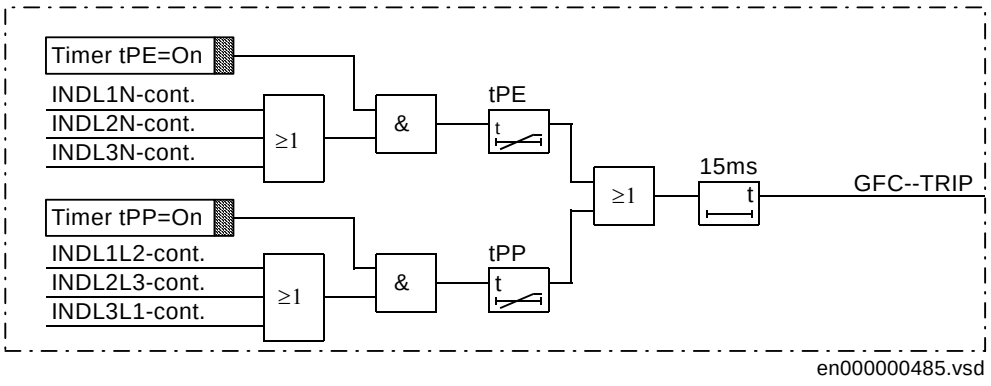


*Figure 36: Composition of time-delayed tripping signal*

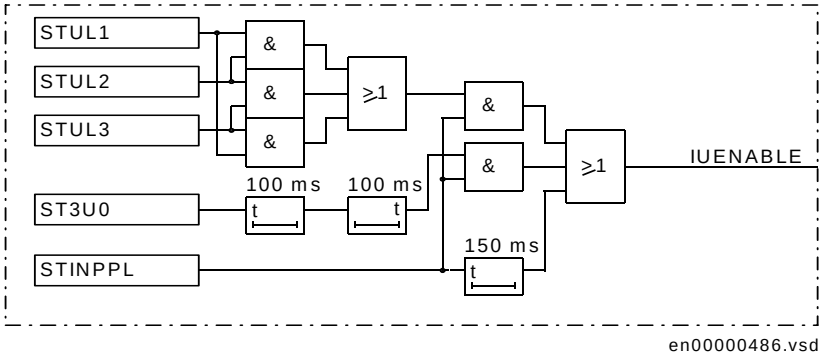


*Figure 37: Cross-country fault detection logic*

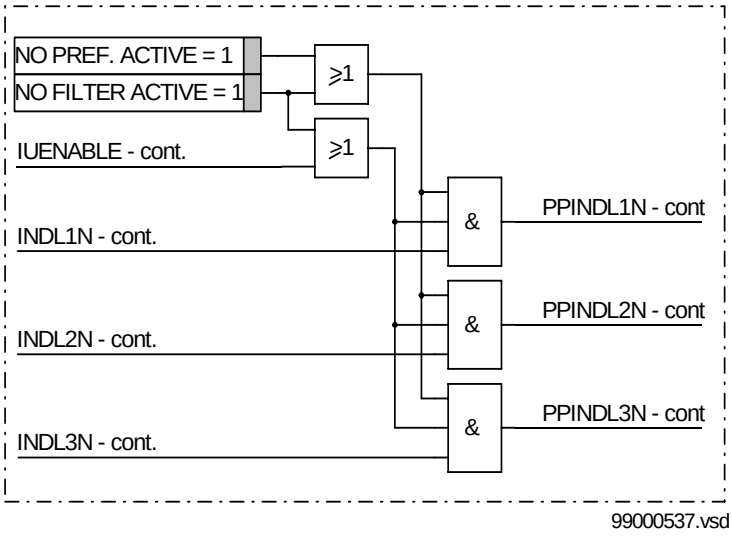


*Figure 38: Phase preference logic with no filter setting and no preference setting*

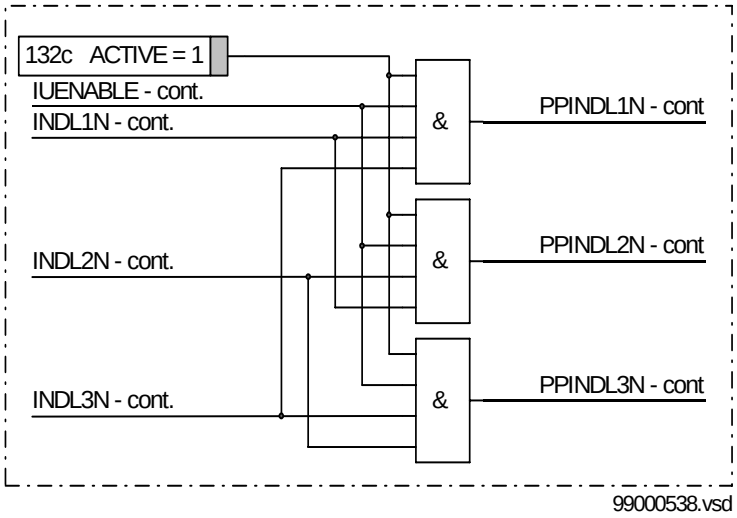


*Figure 39: Cyclic phase preference logic with 132c setting active*

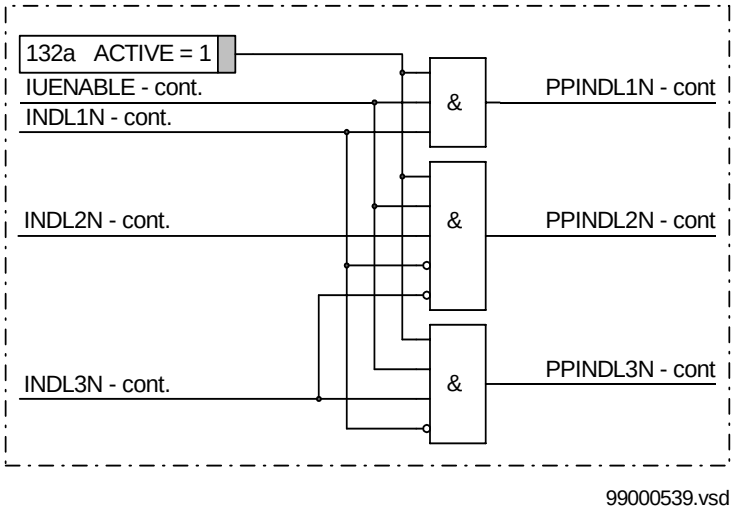


*Figure 40: Acyclic phase preference logic with 132a setting active*

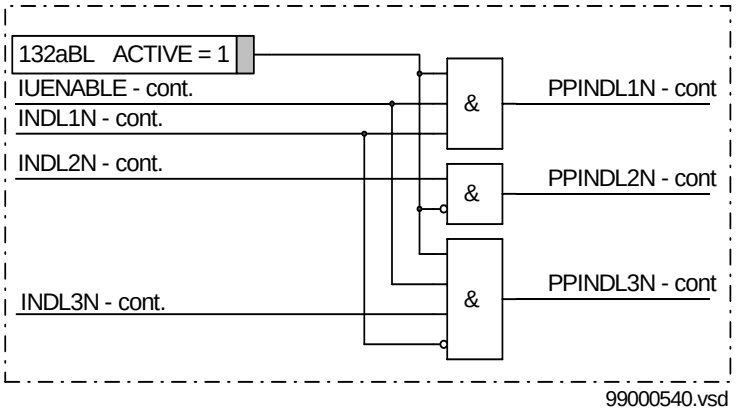


*Figure 41: Acyclic phase preference logic with one phase blocked, 132aBL. setting active*

## 4.5 Input and output signals

**Table 98: Input signals for the GFC (GFC--) function block**

| Signal | Description |
|---|---|
| BLOCK | Block the operation of the GFC measuring elements |

Path in local HMI: ServiceReport/Functions/Impedance/GenFltCriteria/FuncOutputs

**Table 99: Output signals for the GFC (GFC--) function block**

| Signal | Description |
|---|---|
| TRIP | Time delayed trip caused by general fault criteria (GFC) |
| STFWL1 | General fault criteria - forward operation in phase L1 |
| STFWL2 | General fault criteria - forward operation in phase L2 |
| STFWL3 | General fault criteria - forward operation in phase L3 |
| STFWPE | General fault criteria - forward operation of ph-E loop |
| STRVL1 | General fault criteria - reverse operation in phase L1 |
| STRVL2 | General fault criteria - reverse operation in phase L2 |
| STRVL3 | General fault criteria - reverse operation in phase L3 |
| STRVPE | General fault criteria - reverse operation of ph-E loop |
| STNDL1 | General fault criteria - non-directional operation in phase L1 |
| STNDL2 | General fault criteria - non-directional operation in phase L2 |
| STNDL3 | General fault criteria - non-directional operation in phase L3 |
| STNDPE | General fault criteria - non-directional operation of ph-E loop |
| STFW1PH | General fault criteria - single-phase fault in forward direction |

| Signal | Description |
|---|---|
| STFW2PH | General fault criteria - two-phase fault in forward direction |
| STFW3PH | General fault criteria - three-phase fault in forward direction |
| STPE | Start the phase-to-earth measuring loops |
| STPP | Start the phase-to-phase measuring loops |
| STCND | Release (starting) condition for the external distance protection measuring zones |

## 4.6 Setting parameters

Path in local HMI: Settings/Functions/Groupn/Impedance/GenFltCriteria

**Table 100: General setting parameters**

| Parameter | Range | Default | Unit | Description |
|---|---|---|---|---|
| Operation | Off/On | Off | - | Operating mode |
| INReleasePE | 10-100<br>Step: 1 | 20 | % of IphMax | 3I0 limit for releasing phase-to-earth measuring loops |
| INBlockPP | 10-100<br>Step: 1 | 40 | % of IphMax | 3I0 limit for blocking phase-to-phase measuring loops |
| Timer tPP | Off/On | Off | - | Time delayed of trip for phase-to-phase faults enabled or disabled |
| tPP | 0.000-60.000<br>Step: 0.001 | 5.000 | s | Time delay of trip for phase-to-phase faults |
| Timer tPE | Off/On | Off | - | Time delay of trip for phase-to-earth faults enabled or disabled |
| tPE | 0.000-60.000<br>Step:0.001 | 5.000 | s | Time delay of trip for phase-to-earth faults |

Path in local HMI: Settings/Functions/Groupn/Impedance/GenFltCriteria

**Table 101: Setting parameters for the overcurrent operating mode**

| Parameter | Range | Default | Unit | Description |
|---|---|---|---|---|
| Operation I> | Off/On | Off | - | Operation of current based GFC measurement enabled or disabled |
| IP> | 10-400<br>Step: 1 | 50 | % of I1b | Set operate value for measured phase currents |
| IN> | 10-150<br>Step: 1 | 50 | % of I4b | Set operate value for measured residual current |

Setting parameters for the resistive and the reactive reach are given for terminals with rated current Ir = 1A. All values should be divided by 5 for terminals with rated current Ir = 5A.

Path in local HMI: Settings/Functions/Groupn/Impedance/GenFltCriteria

**Table 102: Setting parameters for the underimpedance operating mode ($I_r$ = 1A, divide by 5 for $I_r$ = 5A)**

| Parameter | Range | Default | Unit | Description |
|---|---|---|---|---|
| Operation Z< | Off/On | Off | - | Operation of underimpedance based GFC measurement enabled or disabled |
| ARGLd | 5-45<br>Step: 1 | 25 | degrees | Load angle determining the load impedance area |
| RLd | 0.10-400.00<br>Step: 0.01 | 50 | ohm/loop | Limitation of resistive reach within the load impedance area |
| X1RvPP | 0.10-400.00<br>Step: 0.01 | 50 | ohm/phase | Positive sequence reactive reach in reverse direction for phase-to-phase faults |
| X1FwPP | 0.10-400.00<br>Step: 0.01 | 50 | ohm/phase | Positive sequence reactive reach in forward direction for phase-to-phase faults |
| RFPP | 0.10-400.00<br>Step: 0.01 | 50 | ohm/loop | Resistive reach (forward and reverse) for phase-to-phase measurement |
| X1RvPE | 0.1-400.00<br>Step: 0.01 | 50 | ohm/phase | Positive sequence reactive reach in reverse direction for phase-to-earth faults |
| X1FwPE | 0.1-400.00<br>Step: 0.01 | 50 | ohm/phase | Positive sequence reactive reach in forward direction for phase-to-earth faults |
| X0FwPE | 0.1-1200.00<br>Step: 0.01 | 50 | ohm/phase | Zero sequence reactance of reach in forward direction for phase-to-earth faults |
| X0RvPE | 0.1-1200.00<br>Step: 0.01 | 50 | ohm/phase | Zero sequence reactance of reach in reverse direction for phase-to-earth faults |
| RFPE | 0.1-400.00<br>Step: 0.01 | 50 | ohm/loop | Resistive reach (forward and reverse) for phase-to-earth measurement |

Path in local HMI: Settings/Functions/Groupn/Impedance/GenFltCriteria

**Table 103: Setting parameters for phase preference logic**

| Parameter | Range | Default | Unit | Description |
|---|---|---|---|---|
| PhasePref | NoFilter/NoPref/132c/312c/132a/123a/321a/312a/213a/231a/132aBl/123aBl/321aBl/312aBl/213aBl/231aBl | NoFilter | - | Selection of a phase preference for cross-country faults |
| IN> | 20-200 | 20 | % | Operate value of residual current for cross-country faults |
| 3U0> | 30-70 | 30 | % | Operate value of residual voltage for cross-country faults |
| UPN< | 10-100 | 70 | % | Operate value of under voltage non directional phase selection phase-to-earth measurement |
| UPP< | 20-170 | 70 | % | Operate value of under voltage non directional phase selection phase-to-phase measurement |
| Block1phTrip | Off/On | Off | - | Block of trip for single phase faults enabled or disabled |

## 4.7 Technical data

**Table 104: GFC - General fault criteria, impedance and current based**

| Function | | | Value |
|---|---|---|---|
| Impedance setting range at $I_r$ = 1A | Reactive reach forward | Positive-sequence reactance | 0.1-400 ohm/phase in steps of 0.01 ohm/phase |
| | | Zero-sequence reactance | 0.1-1200 ohm/phase in steps of 0.01 ohm /phase |
| | Reactive reach reverse | Positive-sequence reactance | 0.1-400 ohm/phase in steps of 0.01 ohm/phase |
| | | Zero-sequence reactance | 0.1-1200 ohm/phase in steps of 0.01 ohm /phase |
| | Resistive reach (forward & reverse) | For phase - phase faults | 0.1-400 ohm/loop in steps of 0.01 ohm/loop |
| | | For phase - earth faults | 0.1-400 ohm/loop in steps of 0.01 ohm/loop |
| | | Load encroachment | 0.1-400 ohm/loop in steps of 0.01 ohm/loop |
| | | Safety load impedance angle | 5-45 degrees in steps of 1 degrees |
| Overcurrent setting range | Phase currents | | 10-400% of I1b in steps of 1% |
| | Residual current | | 10-150% of I4b in steps of 1% |

| Function | | Value |
|---|---|---|
| Timers | For phase-to-phase measuring elements | 0.000-60.000 s in steps of 1 ms |
| | For phase-to-earth measuring elements | 0.000-60.000 s in steps of 1 ms |
| Static angular accuracy at 0 degrees and 85 degrees | Voltage range (0.1-1.1) x $U_r$ | +/-5 degrees |
| | Current range (0.5-30) x $I_r$ | |
| Reset ratio | | 105% typically |

**Table 105: GFCppl-zi - Phase preference logic**

| Parameter | | Setting range |
|---|---|---|
| Operate residual current, IN> | | 20-200% of I4b in steps of 1% |
| Operate residual voltage, 3U0> | | 30-70% of U1b in steps of 1% |
| Voltage phase selection | Phase to phase, UPP< | 20-170% of U1b in steps of 1% |
| | Phase to earth, UPN< | 10-100% of U1b in steps of 1% |
| Cyclic tripping phase preference | | L1L3L2, L3L1L2 |
| Non-cyclic tripping phase preference | | L1L3L2, L1L2L3, L3L2L1, L3L1L2, L2L1L3, L2L3L1 |
| Non-cyclic blocking phase preference | | L1L3L2, L1L2L3, L3L2L1, L3L1L2, L2L1L3, L2L3L1 |

# 5 Radial feeder protection (PAP)

## 5.1 Application

The main purpose of the PAP radial feeder protection function is to provide tripping at the ends of radial feeders with passive load or with weak end infeed. To obtain this tripping, the PAP function must be included within the protection terminal at the load / weak end infeed end.

## 5.2 Functionality

The PAP function performs the phase selection using the measured voltages. Each phase voltage is compared to the opposite phase-phase voltage. A phase is deemed to have a fault if its phase voltage drops below a settable percentage of the opposite phase-phase voltage. The phase-phase voltages include memory. This memory function has a settable time constant.

The PAP function has built-in logic for fast tripping as well as time delayed tripping. The voltage-based phase selection is used for both the fast and the delayed tripping. To get fast tripping, scheme communication is required. Delayed tripping does not require scheme communication. It is possible to permit delayed tripping only on failure of the communications channel by blocking the delayed tripping logic with a communications channel healthy input signal.

On receipt of the communications signal, phase selective outputs for fast tripping are given based on the phase(s) in which the phase selection function has operated.

For delayed tripping, the single-pole and three-pole delays are separately and independently settable. Furthermore, it is possible to enable or disable three-pole delayed tripping. It is also possible to select either single-pole delayed tripping or three-pole delayed tripping for single-phase faults. Three-pole delayed tripping for single-phase faults is also dependent on the selection to enable or disable three-pole tripping. For single-phase faults, it is possible to include a residual current check in the tripping logic. Three-pole tripping is always selected for phase selection on more than one phase. Three-phase tripping will also occur if the residual current exceeds the set level during fuse failure for a time longer than the three-pole trip delay time.

The radial feeder protection function also includes logic which provides outputs that are specifically intended for starting the automatic recloser.

## 5.3 Function block

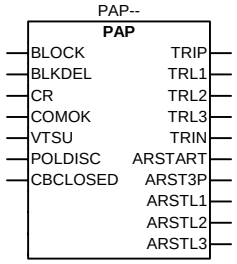


xx00000593.vsd

## 5.4 Logic diagram, phase selection function

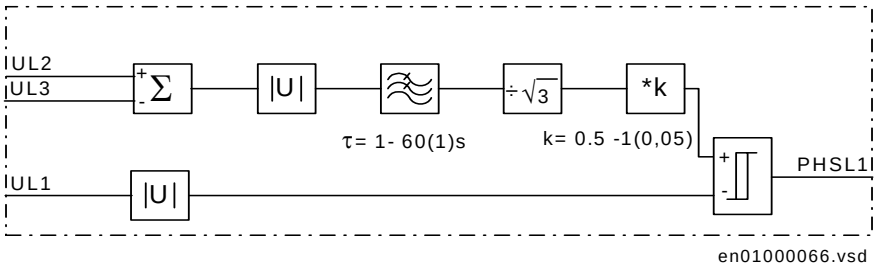


*Figure 42: Phase selection function, simplified logic diagram*

## 5.5 Logic diagram, residual current measurement

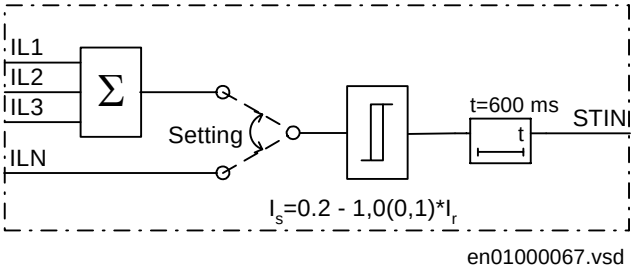


*Figure 43: Residual current measurement, simplified logic diagram*

## 5.6 Logic diagram, fast fault clearing

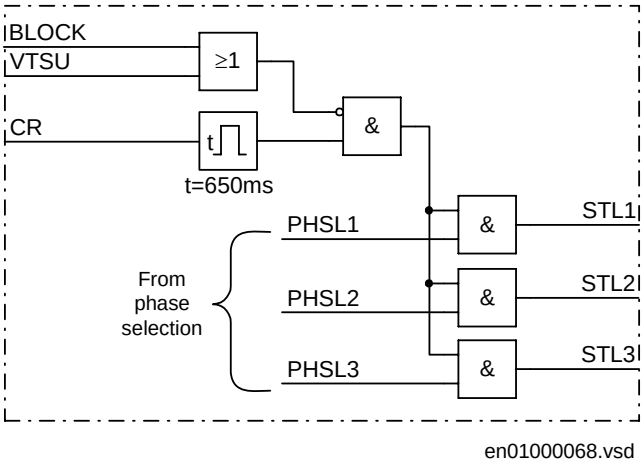


*Figure 44: Function for fast fault clearing, simplified logic diagram*

## 5.7 Logic diagram, delayed fault clearing

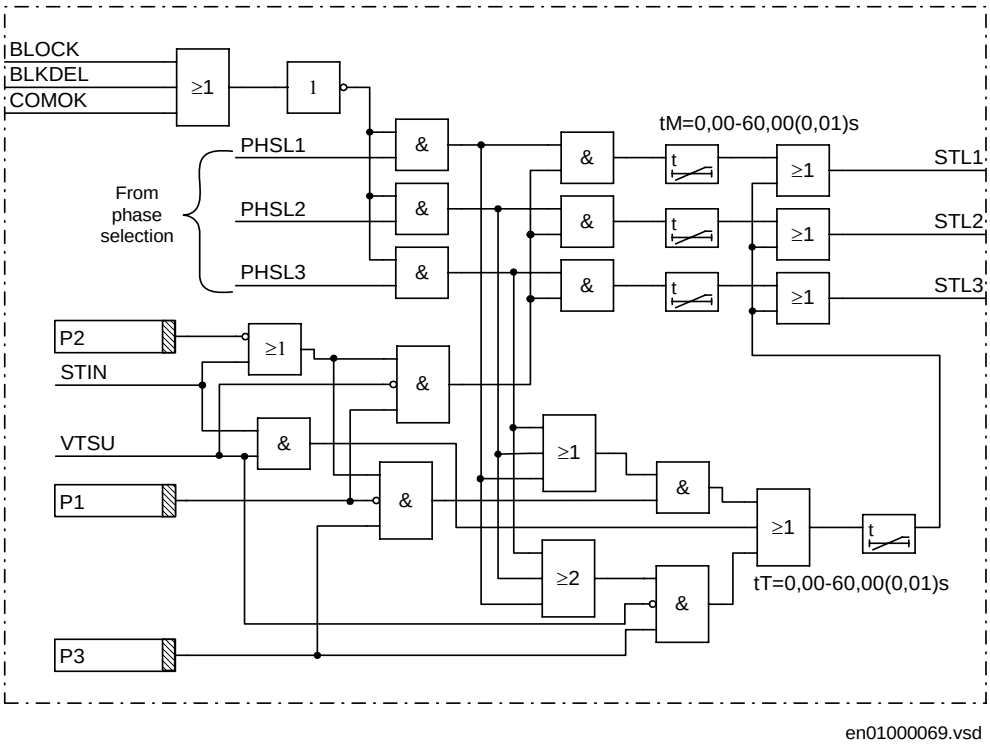


*Figure 45: Function for delayed fault clearing, simplified logic diagram*

## 5.8 Logic diagram, residual current detection

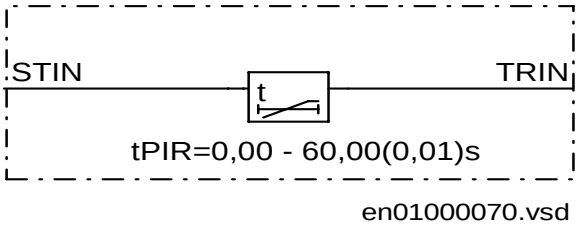


*Figure 46: Residual current detection, simplified logic diagram*

## 5.9 Logic diagram, trip and autorecloser start logic

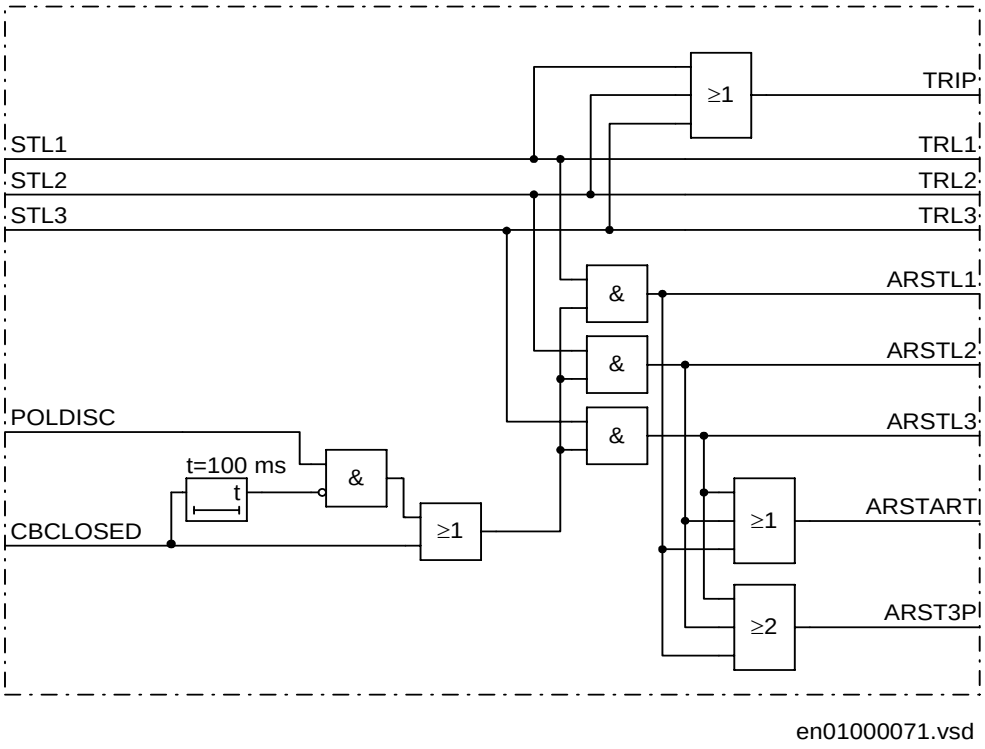


*Figure 47: Trip and autorecloser start logic, simplified logic diagram*

## 5.10 Input and output signals

**Table 106: Input signals for the PAP (PAP--) function block**

| Signal | Description |
|---|---|
| BLOCK | Blocks radial feeder protection |
| BLKDEL | Blocks delayed fault clearing function |
| CR | Communication signal received |
| COMOK | Telecommunications link healthy |
| VTSU | Blocks the operation of the function. Usually connected to FUSE-VTSU. |
| POLDISC | Information on pole discordance |
| CBCLOSED | Information on closed circuit breaker |

Path in local HMI: ServiceReport/Functions/RadialFeederP/FuncOutputs

**Table 107: Output signals for the PAP (PAP--) function block**

| Signal | Description |
|---|---|
| TRIP | Trip by radial feeder protection |
| TRL1 | Trip in phase L1 |
| TRL2 | Trip in phase L2 |
| TRL3 | Trip in phase L3 |
| TRIN | Trip (or indication) for residual current |
| ARSTART | Start automatic recloser |
| ARST3P | Start automatic recloser three-pole |
| ARSTL1 | Start automatic recloser in phase L1 |
| ARSTL2 | Start automatic recloser in phase L2 |
| ARSTL3 | Start automatic recloser in phase L3 |

## 5.11 Setting parameters

Path in local HMI: Settings/Functions/Groupn/RadialFeederP

**Table 108: Setting parameters for the radial feeder protection PAP (PAP--) function**

| Parameter | Range | Default | Unit | Description |
|---|---|---|---|---|
| Operation | Off, On | Off | - | Operating mode for PAP function |
| OperFast | Off, On | Off | - | Fast fault clearing function |
| U< | 50 - 100<br>Step: 1 | 60 | % of $U_{ref}$ | % with respect to $U_{ref}$ of cross-polarised phase-phase voltage divided by sqrt(3) - used as reference for faulted phase voltage selection |
| Tau | 1 - 60<br>Step: 1 | 5 | s | Time constant for reference voltage |
| IMeasured | I4, I5,<br>I1+I2+I3 | I4 | - | Residual current signal source |
| In> | 10 - 150<br>Step: 1 | 50 | % of I1b | Residual current detection level |
| Del1PhFltTrip | 3Ph, 1Ph | 3 Ph | - | Delayed trip for single-phase faults |
| ResCurrCheck | Off, On | Off | - | Residual current check for delayed trip for single-phase faults enabled or disabled |
| Del3PhTrip | Off, On | Off | - | Delayed three-pole tripping enabled or disabled |
| tM | 0.00 - 60.00<br>Step: 0.01 | 10.00 | s | Time delay for single-pole tripping |
| tT | 0.00 - 60.00<br>Step: 0.01 | 10.00 | s | Time delay for three-pole tripping |
| tPIR | 0.00 - 60.00<br>Step: 0.01 | 10.00 | s | Time delay for indication of residual current greater than set threshold |

## 5.12 Technical data

**Table 109: PAP - Radial feeder protection function**

| Parameter | Setting range | Accuracy |
|---|---|---|
| Faulted phase voltage detection level in % of cross-polarised phase-phase voltage divided by sqrt(3) | 50-100% of $U_{ref}$ in steps of 1% | ±2.5% of $U_r$ |
| Time constant for reference voltages | 1-60s in steps of 1s | |
| Residual current detection level | 10-150% of I1b in steps of 1% | ±2.5% of $I_r$ at $I \leq I_r$<br>±2.5% of I at $I > I_r$ |
| Time delay tM for single-pole tripping | 0.000-60.000s in steps of 0.01s | ±0.5% ±10 ms |
| Time delay tT for three-pole tripping | 0.000-60.000s in steps of 0.01s | ±0.5% ±10 ms |
| Time delay tPIR for residual current tripping (or indication) | 0.000-60.000s in steps of 0.01s | ±0.5% ±10 ms |

# Chapter 5 Current

**About this chapter**

This chapter describes the current protection functions.

# 1 Instantaneous non-directional overcurrent protection (IOC)

## 1.1 Application

Different system conditions, such as source impedance and the position of the faults on long transmission lines influence the fault currents to a great extent. An instantaneous phase overcurrent protection with short operate time and low transient overreach of the measuring elements can be used to clear close-in faults on long power lines, where short fault clearing time is extremely important to maintain system stability.

The instantaneous residual overcurrent protection can be used in a number of applications. Below some examples of applications are given.

- Fast back-up earth fault protection for faults close to the line end.
- Enables fast fault clearance for close in earth faults even if the distance protection or the directional residual current protection is blocked from the fuse supervision function

## 1.2 Functionality

The current measuring element continuously measures the current in all three phases and compares it to the set operate value IP>>. A filter ensures immunity to disturbances and dc components and minimizes the transient overreach. If any phase current is above the set value IP>>, the phase overcurrent trip signal TRP is activated. Separate trip signal for the actual phase(s) is also activated. The input signal BLOCK blocks all functions in the current function block.

The current measuring element continuously measures the residual current and compares it to the set operate value IN>>. A filter ensures immunity to disturbances and dc components and minimizes the transient overreach. If the residual current is above the set value IN>>, the residual overcurrent trip signal TRN is activated. The general trip signal TRIP is activated as well. The input signal BLOCK blocks the complete function.

## 1.3 Function block

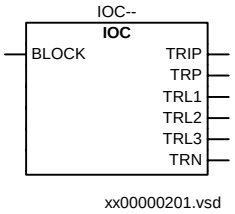


*Figure 48: IOC function block phase + N with 1, 2, 3 phase trip*

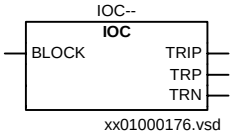


*Figure 49: IOC function block, phase + N with 3 phase trip*

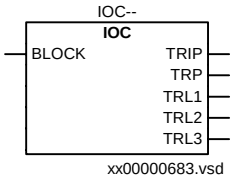


*Figure 50: IOC function block phase with 1, 2, 3 phase trip*

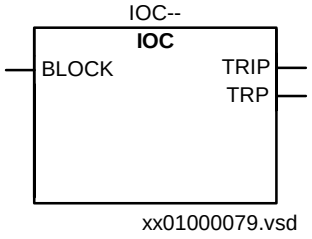


*Figure 51: IOC function block, phase with 3 phase trip*

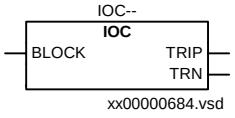


*Figure 52: IOC function block, N + 3 phase trip*

## 1.4 Logic diagram

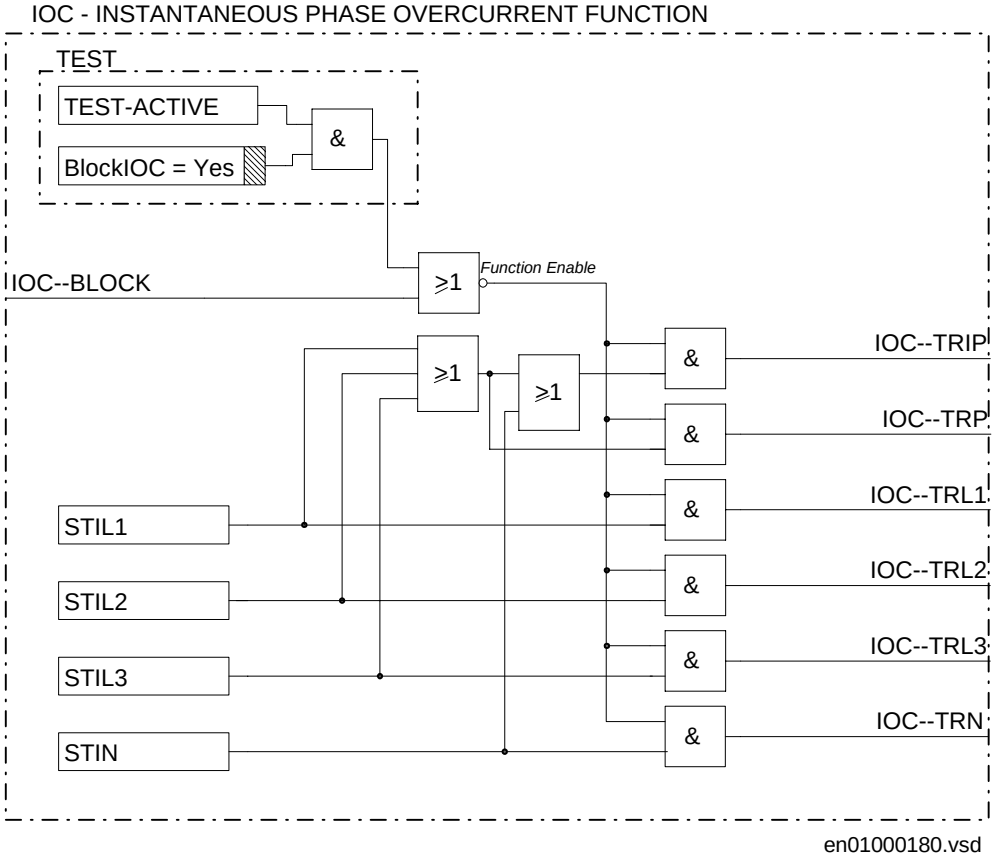


*Figure 53: IOC function, logic diagram*

## 1.5 Input and output signals

**Table 110: Input signals for the IOC (IOC--) function block**

| Signal | Description |
|---|---|
| BLOCK | Block of the instantaneous overcurrent protection function. |

Path in local HMI: ServiceReport/Functions/InstantOC/FuncOutputs

**Table 111: Output signals for the IOC (IOC--) function block**

| Signal | Description |
|---|---|
| TRIP | Trip by instantaneous overcurrent function. |
| TRP | Trip by instantaneous phase overcurrent function when included |
| TRL1 | Trip by instantaneous overcurrent function, phase L1 when single pole tripping is included |
| TRL2 | Trip by instantaneous overcurrent function, phase L2 when single pole tripping is included |
| TRL3 | Trip by instantaneous overcurrent function, phase L3 when single pole tripping is included |
| TRN | Trip by the instantaneous residual overcurrent function when included |

## 1.6 Setting parameters

Path in local HMI: Settings/Functions/Group*n*/InstantOC (where *n*=1-4)

**Table 112: Setting parameters for the instantaneous phase and residual overcurrent protection IOC (IOC--) (non-dir.) function**

| Parameter | Range | Default | Unit | Description |
|---|---|---|---|---|
| Operation | Off, On | Off | - | Operating mode for the IOC function |
| IP>> | 50-2000<br>Step: 1 | 100 | % of I1b | Operating phase current |
| IN>> | 50-2000<br>Step: 1 | 100 | % of I1b | Operating residual current |

## 1.7 Technical data

**Table 113: IOC - Instantaneous overcurrent protection**

| Function | | Setting range | Operate time | Accuracy |
|---|---|---|---|---|
| Operate current I>> | Phase measuring elements | (50-2000)% of I1b In steps of 1% | - | ± 2.5 % of $I_r$ at I ≤$I_r$<br>± 2.5 % of I at I > $I_r$ |
| | Residual measuring elements | (50-2000)% of I1b In steps of 1% | - | ± 2.5 % of $I_r$ at I ≤ $I_r$<br>± 2.5 % of I at I > $I_r$ |
| Maximum operate time at I > 10 × $I_{set}$ | | | Max. 15ms | - |
| Dynamic overreach at τ< 100 ms | | | - | < 5% |

# 2 Definite time non-directional overcurrent protection (TOC)

## 2.1 Application

The time delayed overcurrent protection, TOC, operates at different system conditions for currents exceeding the preset value and which remains high for longer than the delay time set on the corresponding timer. The function can also be used for supervision and fault detector for some other protection functions, to increase the security of a complete protection system. It can serve as a back-up function for the line distance protection, if activated under fuse failure conditions which has disabled the operation of the line distance protection.

The time delayed residual overcurrent protection is intended to be used in solidly and low resistance earthed systems. The time delayed residual overcurrent protection is suitable as back-up protection for phase to earth faults, normally tripped by operation of the distance protection. The protection function can also serve as protection for high resistive phase to earth faults or as a fault detection for some other protection functions.

## 2.2 Functionality

The current measuring element continuously measures the current in all three phases and compares it to the set operate value IP>. A filter ensures immunity to disturbances and dc components and minimizes the transient overreach. If the current in any of the three phases is above the set value IP>, a common start signal STP and a start signal for the actual phase(s) are activated. The timer tP is activated and the phase overcurrent trip signal TRP is activated after set time. The general trip signal TRIP is activated as well.

The input signal BLOCK blocks the function. The input signal BLKTR blocks both trip signals TRP and TRIP.

The residual current measuring element continuously measures the residual current and compares it with the set operate value IN>. A filter ensures immunity to disturbances and dc components and minimizes the transient overreach. If the measured current is above the set value IN>, a start signal STN is activated. The timer tN is activated and the residual overcurrent trip signal TRN is activated after set time. The general trip signal TRIP is activated as well. The input signal BLOCK blocks the function. The input signal BLKTR blocks both trip signals TRN and TRIP.

## 2.3 Function block

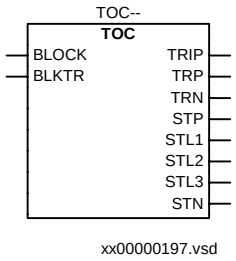


*Figure 54: TOC function block, phase + N*

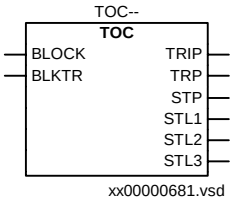


*Figure 55: TOC function block, phase*

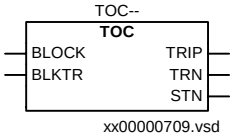


*Figure 56: TOC function block, N*

## 2.4 Logic diagram

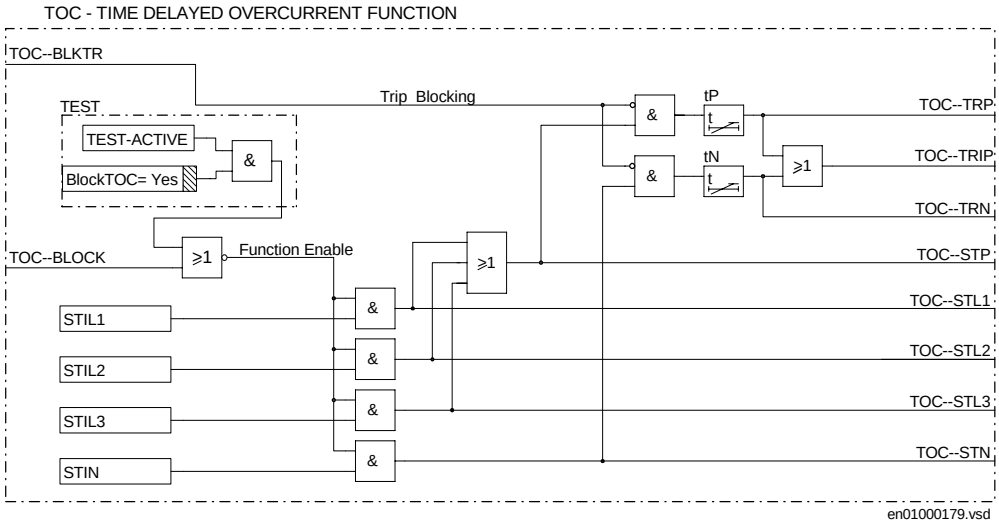


*Figure 57: TOC function, logic diagram*

## 2.5 Input and output signals

**Table 114: Input signals for the TOC (TOC--) function block**

| Signal | Description |
|---|---|
| BLOCK | Block of the overcurrent function. |
| BLKTR | Block of trip from the overcurrent function |

Path in local HMI: ServiceReport/Functions/TimeDelayOC/FuncOutputs

**Table 115: Output signals for the TOC (TOC--) function block**

| Signal | Description |
|---|---|
| TRIP | Trip by time delayed overcurrent function. |
| TRP | Trip by time delayed phase overcurrent function when included |
| TRN | Trip by the time delayed residual overcurrent function when included |
| STP | Start of phase overcurrent function when included |
| STL1 | Start phase overcurrent, phase L1 when phase overcurrent function included |
| STL2 | Start phase overcurrent, phase L2 when phase overcurrent function included |
| STL3 | Start phase overcurrent, phase L3 when phase overcurrent function included |
| STN | Start of the time delayed residual overcurrent function when included |

## 2.6 Setting parameters

Path in local HMI: Settings/Functions/Group*n*/TimeDelayOC (where *n*=1-4)

**Table 116: Setting parameters for the time delayed phase and residual overcurrent protection TOC (TOC--) function**

| Parameter | Range | Default | Unit | Description |
|---|---|---|---|---|
| Operation | Off, On | Off | - | Operating mode for TOC function |
| IP> | 10-400<br>Step: 1 | 100 | % of I1b | Operating phase overcurrent |
| tP | 0.000-60.000<br>Step: 0.001 | 10.000 | s | Time delay of phase overcurrent function |
| IN> | 10-150<br>Step:1 | 100 | % of I4b | Operating residual current |
| tN | 0.000-60.000<br>Step: 0.001 | 10.000 | s | Time delay of residual overcurrent function |

## 2.7 Technical data

**Table 117: TOC - Definite time nondirectional overcurrent protection**

| Function | | Setting range | Accuracy |
|---|---|---|---|
| Operate current | Phase measuring elements, IP> | (10-400) % of I1b in steps of 1 % | ± 2.5 % of $I_r$ at $I \leq I_r$ |
| | | | ± 2.5 % of I at $I > I_r$ |
| | Residual measuring elements, IN> | (10-150) % of I4b in steps of 1 % | ± 2.5 % of $I_r$ at $I \leq I_r$ |
| | | | ± 2.5 % of I at $I > I_r$ |
| Time delay | Phase measuring elements | (0.000-60.000) s in steps of 1 ms | ± 0.5 % of t ± 10 ms |
| | Residual measuring elements | (0.000-60.000) s in steps of 1 ms | ± 0.5 % of t ± 10 ms |
| Dynamic overreach at $\tau$< 100 ms | | - | < 5 % |

# 3 Two step time delayed non-directional phase overcurrent protection (TOC2)

## 3.1 Application

The two current/time stages of overcurrent protection TOC2 improve the possibility to get fast operation for nearby faults by using a high set current stage with short time delay. The low current stage is set with appropriate time delay to get selectivity with the adjacent relays in the system. In networks with inverse time delayed relays, selectivity is generally best obtained by using the same type of inverse time characteristic for all overcurrent relays.

## 3.2 Functionality

The current measuring element continuously measures the current in all phases and compares it to the set operate value for the two current stages. A filter ensures immunity to disturbances and dc components and minimizes the transient overreach. If the current in any of the three phases is above the set value I>Low, the start signal for the low current stage is activated. With setting Characteristic = Def, the timer tLow is activated and the trip signal TRLS is activated after set time. If inverse time delay is selected, the timer tMinInv starts when the current is above the set value I>Low. If the current also is above the set value I>Inv, the inverse time evaluation starts. When both time circuits operate, the definite time circuit tLow is activated and the trip signal TRLS is activated after the additional time tLow. If the current is above the set value I>High, the timer tHigh is activated and the trip signal TRHS is activated after set time.

The input signal BLOCK blocks all functions. Each current stage can also be individually blocked.

## 3.3 Function block

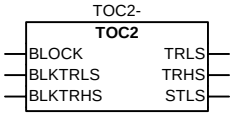

xx00000679.vsd

## 3.4 Logic diagram

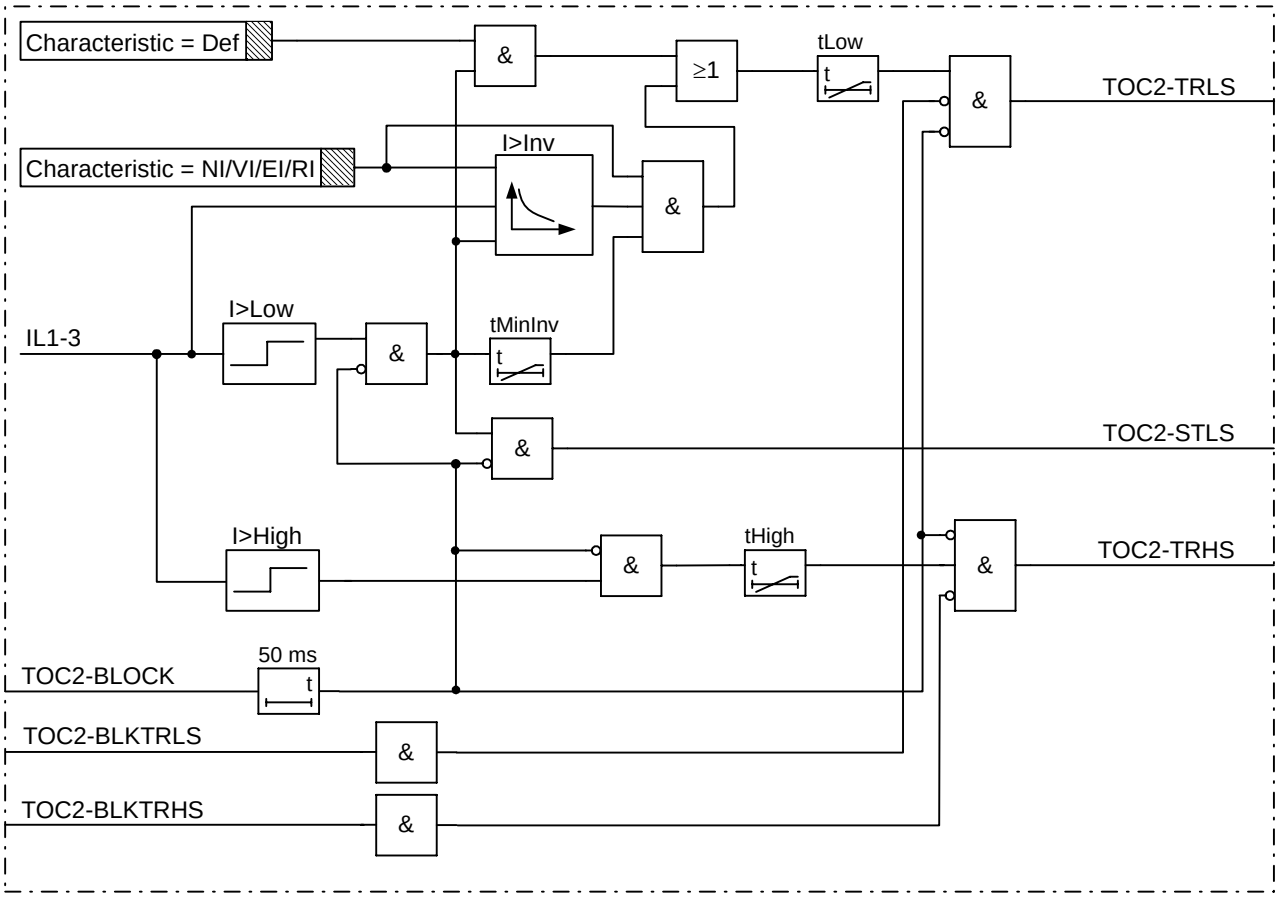


*Figure 58: Two step time delayed phase overcurrent protection, simplified logic diagram*

## 3.5 Input and output signals

Path in local HMI: ServiceReport/Functions/TimeDelayOC (RW)/FuncOutputs

**Table 118: Input signals for the TOC2 (TOC2-) function block**

| Signal | Description |
|---|---|
| BLOCK | Blocks the operation of both time delayed overcurrent stages. |
| BLKTRLS | Blocks the trip from the definite or inverse time delayed low current stage. |
| BLKTRHS | Blocks the trip from the definite time delayed high set current stage |

Path in local HMI: ServiceReport/Functions/TimeDelayOC (RW)/FuncOutputs

**Table 119: Output signals for the TOC2 (TOC2-) two-step overcurrent function**

| Signal | Description |
|---|---|
| TRLS | Trip from the definite or inverse time delayed low set current stage |
| TRHS | Trip from the definite time delayed high set current stage |
| STLS | Start of the low set current stage |

## 3.6 Setting parameters

Path in local HMI-tree: Settings/Functions/Groupn/InvTimeDelayOC

**Table 120: Setting parameters for the two step time delayed phase overcurrent protection TOC2 (TOC2-) function**

| Parameter | Range | Default | Unit | Description |
|---|---|---|---|---|
| Operation | Off, On | Off | - | Operating mode for TOC2 function |
| Operation Low | Off, On | On | - | Operating mode of low set TOC2 function |
| Characteristic | Def, NI, VI, EI, RI | Def | - | Time delay characteristic for low set TOC2 function |
| I>Inv | 5 - 500<br>Step: 1 | 10 | % of I1b | Base current for low set dependent time delay operation |
| k | 0.05 - 1.10<br>Step: 0.01 | 0.05 | - | Time multiplier for dependent time delay operation |
| tMinInv | 0.000 - 60.000<br>Step: 0.001 | 0.050 | s | Minimum operating time for dependent time delay operation |
| I>Low | 5-500<br>Step: 1 | 100 | % of I1b | Minimum operating current for dependent time delay operation |
| tLow | 0.000 - 60.000<br>Step: 0.001 | 1.000 | s | Independent time delay for low set TOC2 function |
| Operation High | Off, On | Off | - | Operating mode of high set TOC2 function |
| I>High | 50-2000<br>Step: 1 | 100 | % of I1b | Operating current for high set TOC2 function |
| tHigh | 0.000 - 60.000<br>Step: 0.001 | 1.000 | s | Time delay for high set TOC2 function |

## 3.7 Technical data

**Table 121: TOC2 - Two step time delayed non-directional phase overcurrent protection**

| Function | Setting range | Accuracy |
|---|---|---|
| Operate value for low set function<br>I > Low | (5-500) % of I1b in steps of 1% | +/- 2.5% of $I1_r$ at $I \leq I1_r$<br>+/- 2.5 % of I at $I>I1_r$ |
| Base current for inverse time calculation<br>I > Inv | (5-500) % of I1b in steps of 1% | +/- 2.5 % of $I1_r$ at $I \leq I1_r$<br>+/- 2.5 % of I at $I> I1_r$ |
| Minimum operate time<br>tMinInv | (0.000-60.000)s in steps of 1 ms | +/- 0.5 % +/- 10 ms |
| Definite time delay for low set function<br>tLow | (0.000-60.000)s in steps of 1 ms | +/- 0.5 % +/- 10 ms |
| Operate value of high set function<br>I > High | (50-2000) % of I1b in steps of 1% | +/- 2.5% of $I1_r$ at $I \leq I1_r$<br>+/- 2.5 % of I at $I>I1_r$ |
| Definite time delay for high set function<br>tHigh | (0.000-60.000) s in steps of 1 ms | +/- 0.5 % +/- 10 ms |
| Normal inverse characteristic<br>$I = I_{meas}/I_{set}$ | $t = \frac{0.14}{I^{0.02} - 1} \cdot k$ | IEC 60255-3 class 5+/- 60 ms |
| Very inverse characteristic | $t = \frac{13.5}{I - 1} \cdot k$ | IEC 60255-3 class 7.5+/- 60 ms |
| Extremely inverse characteristic | $t = \frac{80}{I^2 - 1} \cdot k$ | IEC 60255-3 class 7.5+/- 60 ms |
| Dynamic overreach at $\tau$< 100 ms | | <5% |

# 4 Two step time delayed directional phase overcurrent protection (TOC3)

## 4.1 Application

The two current/time stages of the TOC3 overcurrent protection, both with optional directional (Forward release or Reverse block) or non-directional function, improve the possibility to obtain selective function of the overcurrent protection relative other relays even in meshed networks. It must be realized, however, that the setting of a phase overcurrent protection system in a meshed network can be very complicated and a large number of fault current calculations are needed. In some cases, it is not possible to obtain selectivity even when using directional overcurrent protection. In such cases it is suggested to use line differential protection or distance protection function.

## 4.2 Functionality

The current measuring element continuously measures the current in all three phases and compares it to the set operate value for the two current stages. A filter ensures immunity to disturbances and dc components and minimizes the transient overreach. If the current in any of the three phases is above the set value I>Low, the start signal for the low current stage is activated. With setting Characteristic = Def, the timer tLow is activated and the trip signal TRLS is activated after set time. If inverse time delay is selected, the timer tMinInv starts when the current is above the set value I>Low. If the current also is above the set value I>Inv, the inverse time evaluation starts. When both time circuits operate, the definite time circuit tLow is activated and the trip signal TRLS is activated after set time.

If the current is above the set value I>High, the timer tHigh is activated and the trip signal TRHS is activated after set time.The low and the high set current stages can individually be set directional or non-directional. Directional information is calculated from positive sequence polarization voltages and the phase currents. The polarization voltage contains memory voltage to ensure directional function at close-in three-phase faults. The directional element relay characteristic angle (RCA) and operate angle are settable in wide ranges.

The input signal BLOCK blocks all functions. Trip from each current stage can also be individually blocked.

## 4.3 Function block

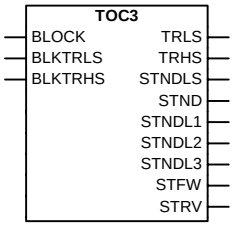


xx00000198.vsd

## 4.4 Logic diagram

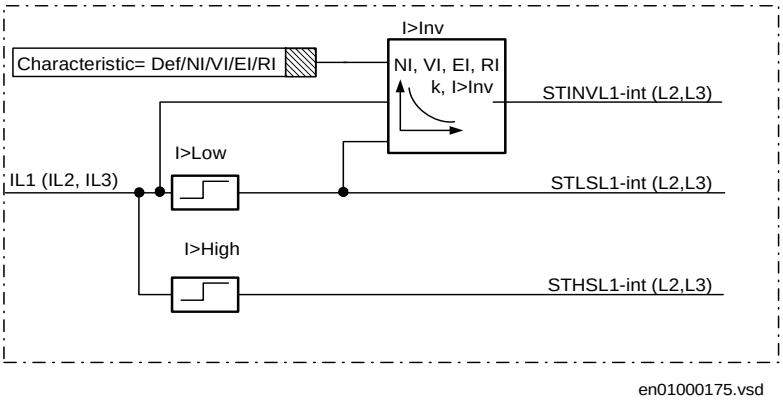


*Figure 59: Simplified block diagram for definite and inverse time delayed phase overcurrent function*

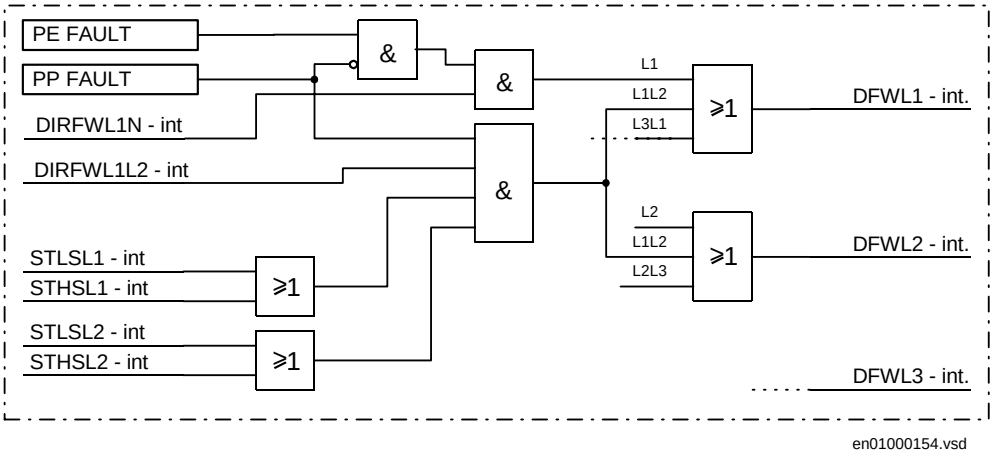


*Figure 60: Excerpt from directional phase selection*

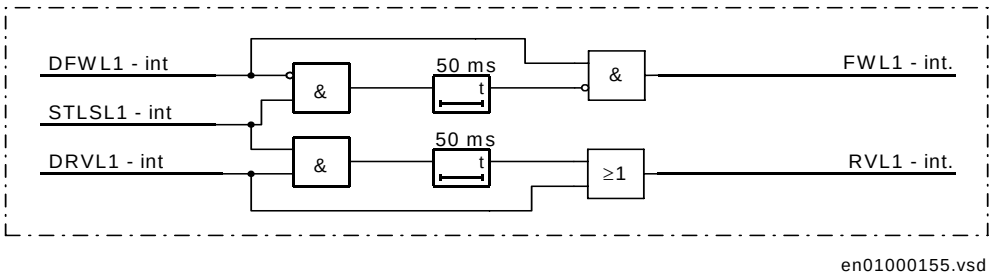


*Figure 61: Current reversal logic for one phase and one set step*

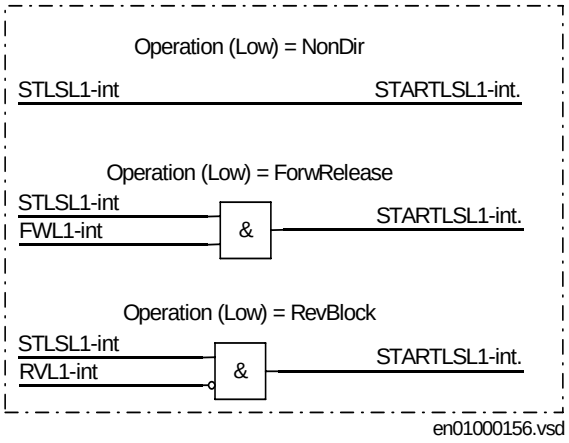


*Figure 62: Directional modes of TOC3*

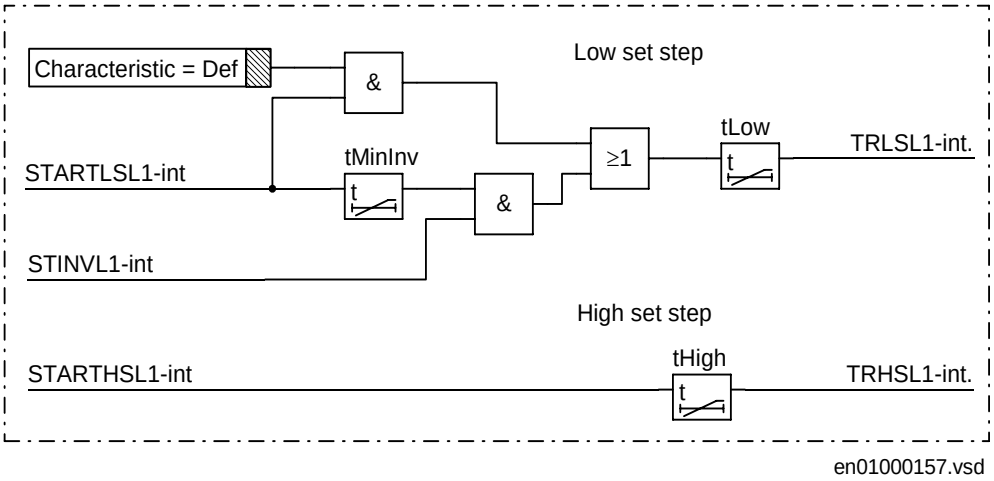


*Figure 63: Delayed time operation for low set step and general time delay*

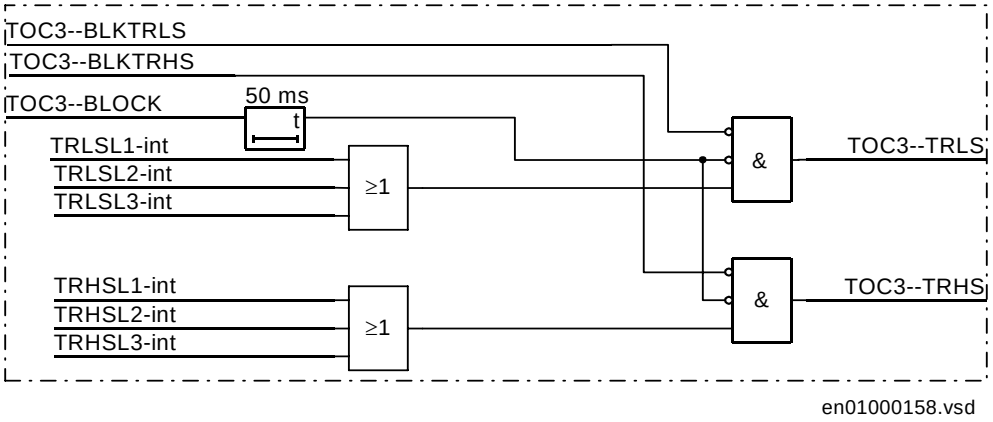


*Figure 64: General trip*

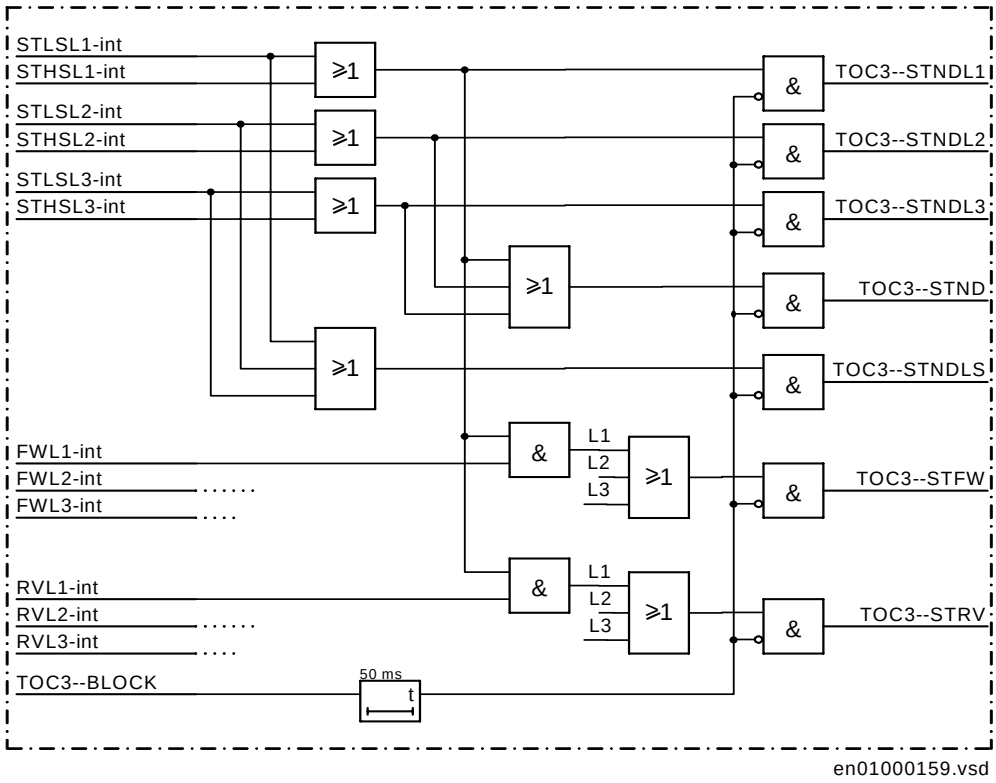


*Figure 65: Start signals*

## 4.5 Input and output signals

**Table 122: Input signals for the TOC3 (TOC3-) function block**

| Signal | Description |
|---|---|
| BLOCK | Blocks the time delayed overcurrent function |
| BLKTRLS | Block the trip from the definite or inverse time delayed low current stage |
| BLKTRHS | Blocks the trip from the definite time delayed high current stage |

Path in local HMI: ServiceReport/Functions/DirInvTimeDelayOC/FuncOutputs

**Table 123: Output signals for the TOC3 (TOC3-) function block**

| Signal | Description |
|---|---|
| TRLS | Trip from the definite or inverse time delayed low current stage |
| TRHS | Trip from the definite time delayed high current stage |
| STNDLS | Non directional start for the low current stage |
| STND | General non directional start |
| STNDL1 | General non directional start, phase L1 |
| STNDL2 | General non directional start, phase L2 |
| STNDL3 | General non directional start, phase L3 |
| STFW | Operation of the forward directional element |
| STRV | Operation of the reverse directional element |

## 4.6 Setting parameters

Path in local HMI-tree: Settings/Functions/Groupn/DirInvTDelayOC

**Table 124: Setting parameters for the directional inverse time phase overcurrent protection TOC3 (TOC3-) function**

| Parameter | Range | Default | Unit | Description |
|---|---|---|---|---|
| Operation | On/Off | Off | | Operating mode for TOC3 function |
| Operation Low | Off, NonDir, ForwRelease, RevBlock | Off | - | Operation mode of low set step |
| Characteristic | Def, NI, VI, EI, RI | Def | - | Time characteristic for low set step |
| I>Inv | (20 - 500) Step: 1 | 20 | % of I1b | Inverse time base current for low set step |
| k | 0.050 - 1.100 Step: 0.010 | 0.050 | | Inverse time multiplier for low set step |
| tMinInv | 0.000 - 60.000 Step: 0.001 | 0.050 | s | Inverse time minimum operating time for low set step |
| I>Low | 20 - 2000 Step: 1 | 100 | % of I1b | Operating current/inverse time min. current low set step |
| tLow | 0.000 - 60.000 Step: 0.001 | 1.000 | s | Independent time delay for lowset |

| Parameter | Range | Default | Unit | Description |
|---|---|---|---|---|
| Operation High | Off, NonDir, ForwRelease, RevBlock | Off | - | Operation mode of high set step |
| I>High | 20 - 2000<br>Step: 1 | 100 | % of I1b | Operating current for high set step |
| tHigh | 0.000 - 60.000<br>Step: 0.001 | 1.000 | s | Time delay for high set step |
| ArgDir | 5-45<br>Step: 1 | 15 | degrees | Lower angle of forward direction Characteristic |
| ArgNegRes | 90-175<br>Step: 1 | 115 | degrees | Upper angle of forward direction Characteristic |

## 4.7 Technical data

**Table 125: TOC3 - Two step time delayed directional phase overcurrent protection**

| Function | Setting range | Accuracy |
|---|---|---|
| Operate value of low set function, I>Low | (20-2000)% of I1b in steps of 1% | ± 2.5 % of $I_r$ at $I \leq I_r$<br>± 2.5 % of I at $I>I_r$ |
| Base current for inverse time calculation, I>Inv | (20-500) % of I1b in steps of 1 % | ± 2.5 % of $I_r$ at $I \leq I_r$<br>± 2.5 % of I at $I>I_r$ |
| Resetting ratio | - | >95% |
| Minimum operate time, tMinInv | (0.000-60.000) s in steps of 1 ms | ± 0.5 % ±10 ms |
| Definite time delay for low set function, tLow | (0.000-60.000) s in step of 1ms | ± 0.5 % ±10 ms |
| Operate value of high set function, I>High | (20-2000) % of I1b in steps of 1 % | ± 2.5 % of $I_r$ at $I \leq I_r$<br>± 2.5 % of I at $I>I_r$ |
| Definite time delay for high set function, tHigh | (0.000-60.000) s in steps of 1 ms | ± 0.5 % ±10 ms |
| Static angular accuracy at 0 degrees and 85 degrees | Voltage range (0.1-1.1) x $U_r$ | ± 5 degrees |
| | Current range (0.5-30) x $I_r$ | |

| Function | Setting range | Accuracy |
|---|---|---|
| Normal inverse characteristic<br>$I = I_{meas}/I_{set}$ | $t = \frac{0.14}{I^{0.02} - 1} \cdot k$ | IEC 60255-3 class 5 + 60 ms |
| Very inverse characteristic<br>$I = I_{meas}/I_{set}$ | $t = \frac{13.5}{I - 1} \cdot k$ | IEC 60255-3 class 7.5 + 60 ms |
| Extremely inverse characteristic<br>$I = I_{meas}/I_{set}$ | $t = \frac{80}{I^2 - 1} \cdot k$ | IEC 60255-3 class 7.5 + 60 ms |
| RI-inverse characteristic<br>$I = I_{meas}/I_{set}$ | $t = \frac{1}{0.339 - \frac{0.236}{I}} \cdot k$ | IEC 60256-3 class 5 + 60 ms |
| Dynamic overreach at $\tau$< 100 ms | | <5% |

# 5 Time delayed residual overcurrent protection (TEF)

## 5.1 Application

Use the inverse and definite time delayed residual overcurrent functions in solidly earthed systems to get a sensitive and fast fault clearance of phase to earth faults.

The nondirectional protection can be used when high sensitivity for earth fault protection is required. It offers also a very fast back-up earth fault protection for the part of a transmission line, closest to the substation with the protection.

The nondirectional residual overcurrent protection can be given a relatively low current pick-up setting. Thus the protection will be sensitive, in order to detect high resistive phase to earth faults.

The directional residual overcurrent protection can be used in a number of applications:

1. Main protection for phase to earth faults on the radial lines in solidly earthed systems. Selectivity is achieved by using time delayed function according to practices in the system (definite time delay or some type of inverse time characteristic).
2. Main protection for phase to earth faults on lines in a meshed solidly earthed system. The directional function can be used in an permissive overreach communication scheme or a blocking scheme. In this application the directional residual overcurrent function is used together with the communication logic for residual overcurrent protection.
3. Back-up protection for phase to earth faults for lines in solidly earthed systems. By using the directional residual protection as back-up function, the back-up fault clearance time can be kept relatively short together with the maintained selectivity.
4. Etc.

## 5.2 Functionality

The residual overcurrent protection measures the residual current of the protected line. This current is compared to the current settings of the function. If the residual current is larger than the setting value a trip signal will be sent to the output after a set delay time. The time delay can be selected between the definite or inverse possibility.

In order to avoid unwanted trip for transformer inrush currents, the function is blocked if the second harmonic content of the residual current is larger than 20% of the measured residual current.

The residual overcurrent protection can be set directional. The residual voltage is used as a polarizing quantity. This voltage is either derived as the vectorial sum of inputs U1+U2+U3 or as the input U4. The fault is defined to be in the forward direction if the residual current component in the characteristic angle 65° (residual current lagging the reference voltage, -3U0), is larger than the set operating current in forward direction. The same kind of measurement is performed also in the reverse direction.

## 5.3 Function block

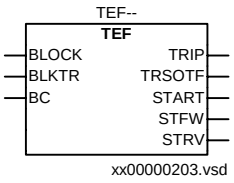


*Figure 66: Function block, directional and nondirectional*

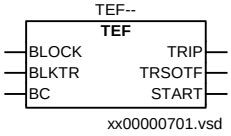


*Figure 67: Function block, nondirectional*

## 5.4 Logic diagram

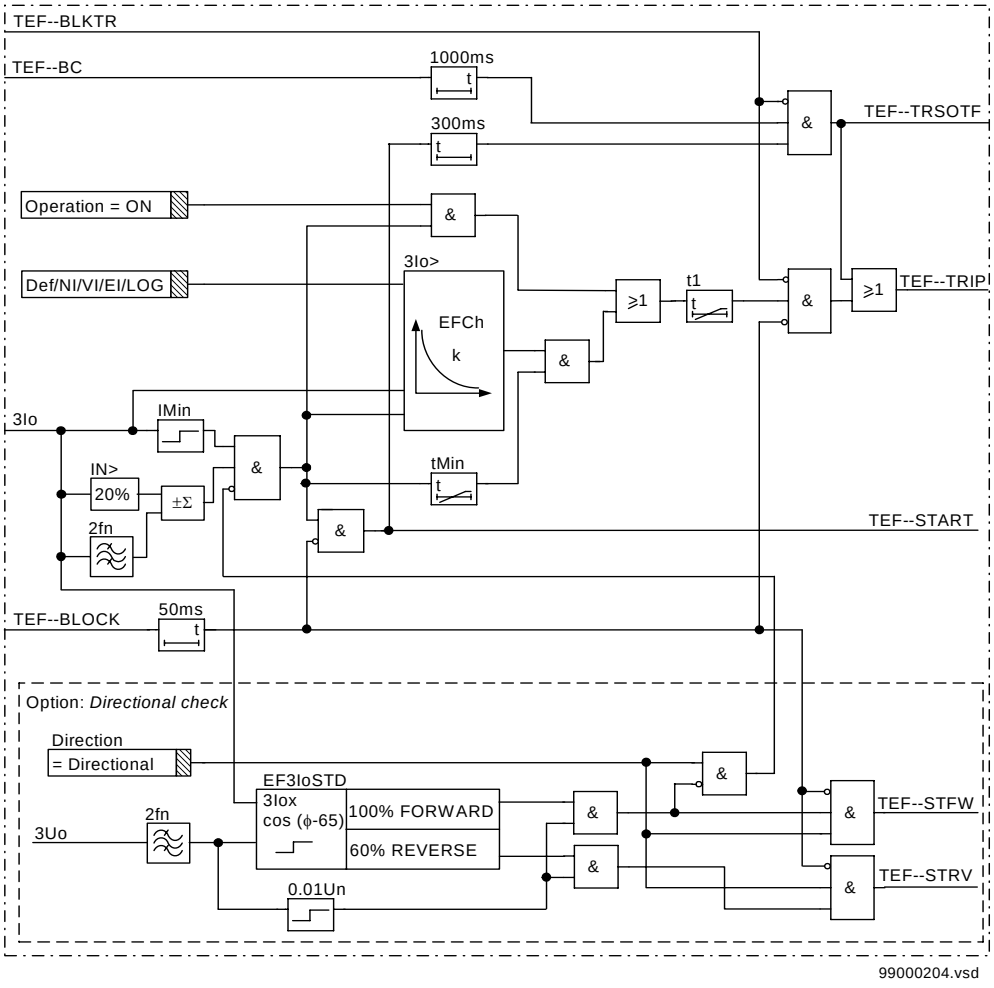


*Figure 68: Simplified logic diagram for the residual overcurrent protection*

## 5.5 Input and output signals

**Table 126: Input signals for the TEF (TEF--) function block**

| Signal | Description |
|---|---|
| BLOCK | Block of function |
| BLKTR | Block of trip |
| BC | Information on breaker position, or on breaker closing command |

Path in local HMI: ServiceReport/Functions/EarthFault/TimeDelayEF/FuncOutputs

**Table 127: Output signals for the TEF (TEF--) function block**

| Signal | Description |
|---|---|
| TRIP | Trip by TEF |
| TRSOTF | Trip by earth fault switch onto fault function |
| START | Non directional start |
| STFW | Forward directional start |
| STRV | Reverse directional start |

## 5.6 Setting parameters

Path in local HMI: Settings/Functions/Groupn/EarthFault/TEF

**Table 128: Settings for the TEF (TEF--) function**

| Parameter | Range | Default | Unit | Description |
|---|---|---|---|---|
| Operation | Off, On | Off | - | Operating mode for TEF function |
| IMeasured | I4, I5 | I4 | - | Current signal used for earth fault function |
| Characteristic | Def, NI, VI, EI, LOG | Def | - | Time delay characteristic for TEF protection |
| IN> | 5 - 300<br>Step: 1 | 5 | % of Inb | Start current for TEF function (I4b or I5b) |
| IMin | 100 - 400<br>Step: 1 | 100 | % of IN | Minimum operating current |
| t1 | 0.000 - 60.000<br>Step: 0.001 | 0.000 | s | Independent time delay |
| k | 0.05 - 1.10<br>Step: 0.01 | 0.05 | - | Time multiplier for dependent time delay |
| tMin | 0.000 - 60.000<br>Step: 0.001 | 0.050 | s | Min. operating time for dependent time delay function |
| Direction | NonDir, Directional | NonDir | - | Selection of directional or non directional mode |
| UMeasured | U4,<br>U1+U2+U3 | U4 | - | Voltage input used for directional earth fault function |
| IN> Dir | 5 - 35<br>Step: 1 | 5 | % of Inb | Start level for directional operation if selected (I4b or I5b) |

## 5.7 Technical data

**Table 129: TEF - Time delayed non-directional residual overcurrent protection**

| Parameter | | Setting range | Accuracy |
|---|---|---|---|
| Start current, definite time or inverse time delay, IN> | | 5-300% of Ib in steps of 1% | ± 5% of set value |
| Operate value for directional current measurement | Forward $I_N$ at φ=65 degrees | 5-35% of Ib in steps of 1% | ± 1.5% of $I_r$ |
| | Reverse | 60% of the setting for forward operation | ± 1.5% of $I_r$ |
| Characteristic angles | | 65 degrees lagging | ± 5 degrees at 20 V and $I_{set}$=35% of $I_r$ |
| Definite time delay | | 0.000 - 60.000 s in steps of 1ms | ± 0.5 % +/-10 ms |
| Time multiplier for inverse time delay<br>k | | 0.05-1.10 in steps of 0.01 | According to IEC 60255-3 |
| Normal inverse characteristic<br>$I = I_{meas}/I_{set}$ | | $t = \frac{0.14}{I^{0.02} - 1} \cdot k$ | IEC 60255-3 class 5 ± 60 ms |
| Very inverse characteristic | | $t = \frac{13.5}{I - 1} \cdot k$ | IEC 60255-3 class 7.5 ± 60 ms |
| Extremely inverse characteristic | | $t = \frac{80}{I^2 - 1} \cdot k$ | IEC 60255-3 class 7.5 ± 60 ms |
| Logarithmic characteristic | | $t = 5.8 - 1.35 \cdot \ln\frac{I}{I_N}$ | ± 5 % of t at I = (1.3-29) × $I_N$ |
| Min. operate current for dependent characteristic, IMin | | 100-400% of IN in steps of 1% | ± 5% of $I_{set}$ |
| Minimum operate time for dependent characteristic, tMin | | 0.000-60.000 s in steps of 1 ms | ± 0.5 % ± 10 ms |
| Minimum polarising voltage | | 1 % of $U_r$ | At 50 Hz: 1% of $U_r$ ± 5%<br>At 60 Hz: 1% of $U_r$ -15% to -5% |
| Reset time | | <70 ms | - |

# 6 Four step time delayed directional residual overcurrent protection (EF4)

## 6.1 Application

In solidly earthed systems the four step residual overcurrent protection can be used in a similar way as a distance protection. As the majority of the faults involve earth connection, the protection will be able to clear most of the faults in these systems. All four steps can be non-directional or directional.

One example of a normal application of the four step residual overcurrent protection can be described as follows: The instantaneous and directional step 1 will normally cover most of the line. The rest of the line is covered by the directional and delayed step 2. Step 2 will also detect and trip earth faults on the remote busbar. The directional step 3 has a longer time delay and will act as a selective protection for earth faults with some degree of fault resistance. The sensitive step 4 has the longest delay. This step will detect and clear high resistive earth faults as well as the majority of series faults.

The four step residual overcurrent protection can also be used together with the communication logic for residual overcurrent protection, in order to realize blocking or permissive overreaching communication schemes.

Scheme communication logic for residual overcurrent protection (EFC) and Current reversal and weak-end infeed logic for residual overcurrent protection (EFCA) are automatically included in (EF4).

## 6.2 Functionality

The function operates on the basis of the residual current and voltage measurement. The function has four steps with individual settings (current, delay, directionality, second harmonic restrained etc.). Step 1, 2 and 3 have independent time delay. The time delay for step 4 can be selected between definite or inverse mode of operation.

For each step the current is compared to the set current of the step. Further the following quantities are checked to be used as release or blocking of function from the steps:

- Direction, forward or reverse direction to the fault. The residual current component lagging the reference (-3U0) voltage 65ÃÂ° is derived. If this current component is larger than the directional current setting, forward direction is detected.
- The second harmonic of the residual current is derived. If this current is larger than 20/32 % of the total residual current, a signal is given that can be used for blocking of the steps.

If the conditions for function is fulfilled for a step, a trip signal is given after the set time delay.

## 6.3 Function block

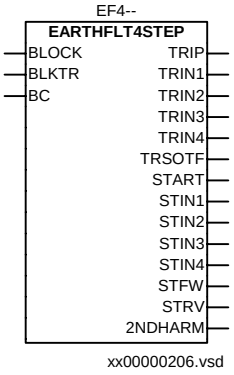


## 6.4 Logic diagram

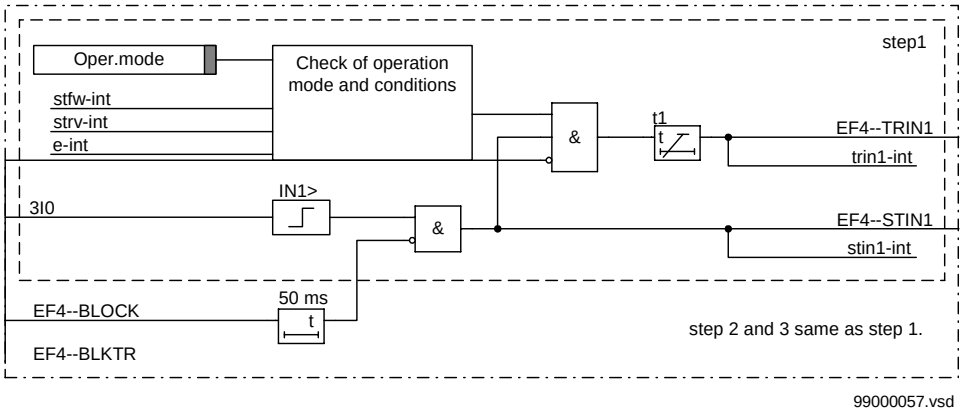


*Figure 69: Simplified logic diagram of internal function Step 1. Step 2 and step 3 are designed in the same way.*

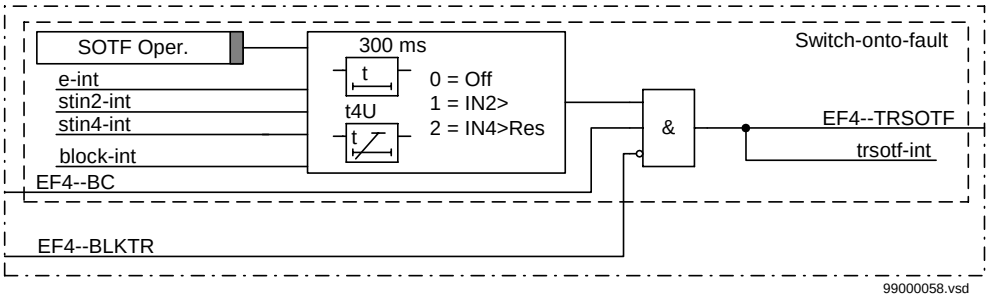


*Figure 70: Simplified logic diagram of internal function Switch-onto-fault.*

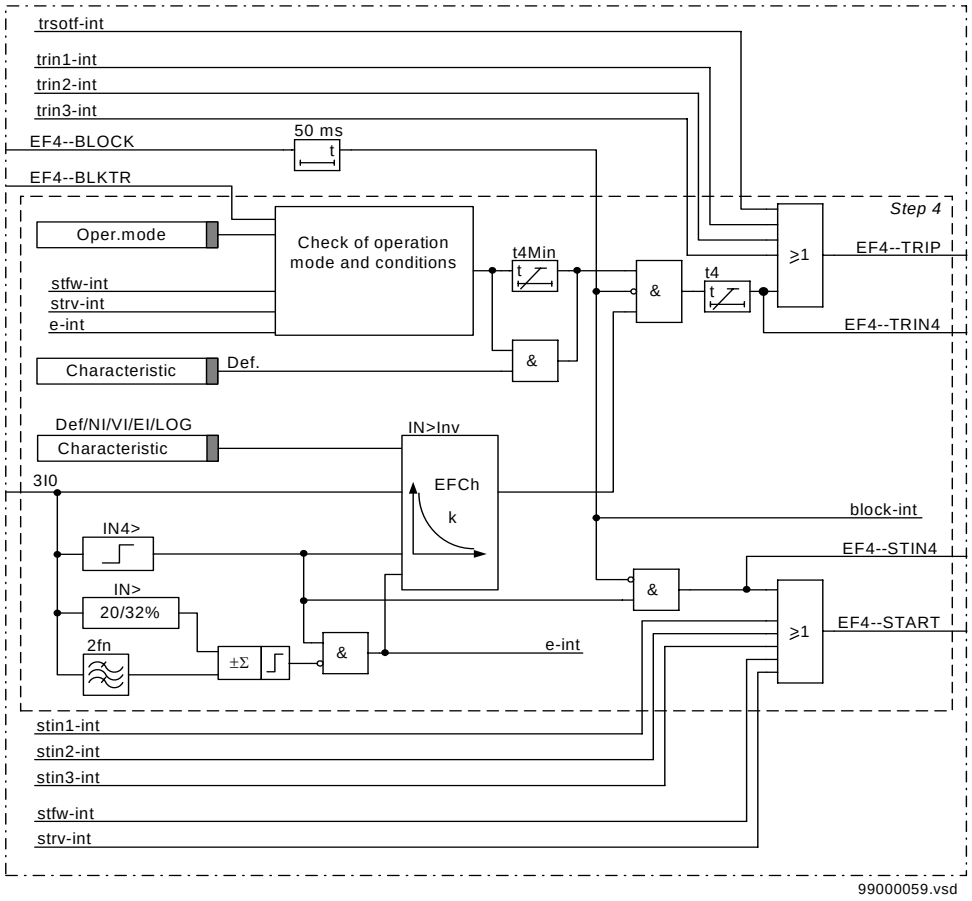


*Figure 71: Simplified logic diagram of internal function step 4.*

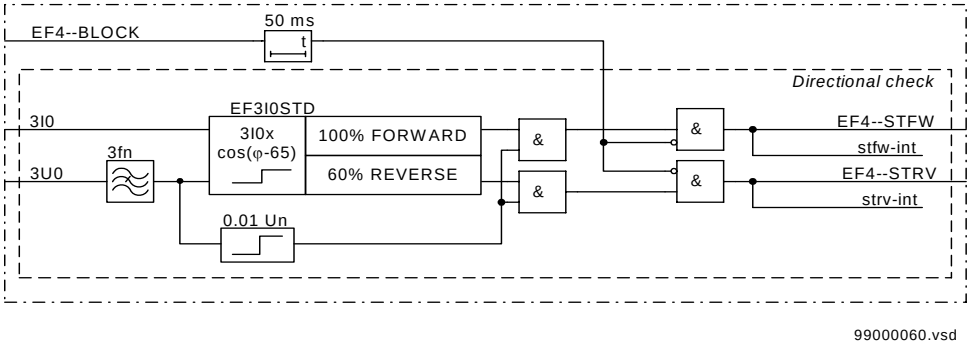


*Figure 72: Simplified logic diagram of internal function Directional check.*

## 6.5 Input and output signals

**Table 130: Input signals for the four step residual overcurrent protection (EF4--) function block**

| Signal | Description |
|---|---|
| BLOCK | Block of earth-fault function |
| BLKTR | Block of trip from earth-fault function |
| BC | Breaker close command |

Path in local HMI: ServiceReport/Functions/EarthFault/4StepEF/FuncOutputs

**Table 131: Output signals for the four step residual overcurrent protection EF4 (EF4--) function block**

| Signal | Description |
|---|---|
| TRIP | Trip |
| TRIN1 | Trip by step 1 |
| TRIN2 | Trip by step 2 |
| TRIN3 | Trip by step 3 |
| TRIN4 | Trip by step 4 |
| TRSOTF | Trip by earth fault switch onto fault function |
| START | Start function |
| STIN1 | Start step 1 |
| STIN2 | Start step 2 |
| STIN3 | Start step 3 |
| STIN4 | Start step 4 |
| STFW | Forward directional start |
| STRV | Reverse directional start |
| 2NDHARM | 2nd harmonic detection operate |

## 6.6 Setting parameters

Path in local HMI-tree: Settings/Functions/Groupn/EarthFault/4StepEF

**Table 132: Setting parameters for the four step residual overcurrent protection EF4 (EF4--) function**

| Parameter | Range | Default | Unit | Description |
|---|---|---|---|---|
| Operation | Off, On | Off | | Operating mode for EF4 function |
| IMeasured | I4, I5 | I4 | | Current input used for measurement |
| UMeasured | U4, U1+U2+U3 | U4 | | Voltage input used for measurement |
| Step1 | Off<br>NonDirNonRestr<br>ForwRelease<br>Restrained<br>ForwRelRestr<br>RevBlock<br>RevBIRestr | Off | | Operating mode of step 1 |
| IN1> | 50-2500<br>Step: 1 | 500 | % of Ib | Current operate level step 1. Ib is the same as selected for IMeasured above (I4b or I5b) |
| t1 | 0.000-60.000<br>Step: 0.001 | 0.000 | s | Independent time delay step 1 |
| Step2 | Same as for step 1 | Off | | Operation mode of step 2 |
| IN2> | 20-1500<br>Step: 1 | 200 | % of Ib | Current operate level step 2. Ib is the same as selected for IMeasured above (I4b or I5b) |
| t2 | 0.000-60.000<br>Step: 0.001 | 0.000 | s | Definite time delay step 2 |
| Step3 | Same as for step 1 | Off | | Operation mode for step 3 |
| IN3> | 20-1500<br>Step: 1 | 100 | % of Ib | Current operate level step 3. Ib is the same as selected for IMeasured above (I4b or I5b) |
| t3 | 0.000-60.000<br>Step: 0.001 | 0.000 | s | Definite time delay step 3 |
| Step4 | Same as for step 1 | Off | | Operation mode for step 4 |
| Characteristic | Def, NI, VI, EI, LOG | Def | | Time delay operation step 4 |
| IN>Inv | 4.0-110.0<br>Step: 0.1 | 50.0 | % of Ib | Inverse time base current. Ib is the same as selected for IMeasured above (I4b or I5b) |
| k | 0.05-1.10<br>Step: 0.01 | 0.05 | | Time multiplier for the dependent time delay characteristic |
| IN4> | 4.0-440.0<br>Step: 0.1 | 100.0 | % of Ib | Operate current/inverse time min current step 4. Ib is the same as selected for IMeasured above (I4b or I5b) |
| t4 | 0.000-60.000<br>Step: 0.001 | 0.000 | s | Definite (inverse additional) time delay step 4 |
| t4Min | 0.000-60.000<br>Step: 0.001 | 0.000 | s | Inverse time minimum delay step 4 |

| Parameter | Range | Default | Unit | Description |
|---|---|---|---|---|
| IN> Dir | 5-40<br>Step: 1 | 30 | % of Ib | Forward direction base current. Ib is the same as selected for IMeasured above (I4b or I5b) |
| 2ndHarmStab | 20, 32 | 20 | % of Ib | Second harmonic restrain operation |
| BlkParTransf | Off, On | Off | | Blocking at parallel transformers |
| SOTF | Off, IN2 >, IN4>, Res | Off | | Switch-onto-fault operation mode |
| t4U | 0.000 - 60.000<br>Step: 0.001 | 0.000 | s | Switch-onto-fault active time |

## 6.7 Technical data

**Table 133: EF4 - Four step time delayed directional residual overcurrent protection**

| Parameter | | Setting range | Accuracy |
|---|---|---|---|
| Current level for step 1, IN1> | | 50 - 2500% of Ib in steps of 1% | ± 5 % of $I_r$ at I≤$I_r$<br>± 5% of I at I>$I_r$ |
| Definite time delay for step 1, t1 | | 0.000 - 60.000 s in steps of 1ms | ± 0.5 % ±10 ms |
| Current level for step 2, IN2> | | 20 - 1500 % of Ib in steps of 1% | ± 5 % of $I_r$ at I≤$I_r$<br>± 5% of I at I>$I_r$ |
| Definite time delay for step 2, t2 | | 0.000 - 60.000 s in steps of 1 ms | ± 0.5 % ± 10 ms |
| Current level for step 3, IN3> | | 20 - 1500 % of Ib in steps of 1% | ± 5 % of $I_r$ at I≤$I_r$<br>± 5% of I at I>$I_r$ |
| Definite time delay for step 3, t3 | | 0.000 - 60.000 s in steps of 1 ms | ± 0.5 % ± 10 ms |
| Current level for step 4 definite time delay or minimum operate current for inverse time delay, IN4> | | 4 - 440 % of Ib in steps of 0.1% | ± 5 % of $I_r$ at I≤$I_r$<br>± 5% of I at I>$I_r$ |
| Definite time delay for step 4 or inverse time additional delay, t4 | | 0.000 - 60.000 s in steps of 1 ms | ± 0.5 % ±10 ms |
| Base current for inverse time delay, IN>Inv | | 4 - 110% of Ib in steps of 0.1% | ± 5 % of $I_r$ at I≤$I_r$<br>± 5% of I at I>$I_r$ |
| Time multiplier for inverse time delay | | 0.05 - 1.10 in steps of 0.01 | - |
| Inverse time minimum delay step 4 | | 0.000 - 60.000 s in steps of 1 ms | ± 0.5 % ± 10 ms |
| Operate value for directional current measurement | Forward $I_N$ at φ= 65° | 5-40% of Ib in steps of 1% | ± 2.5 % of $I_r$ at I≤$I_r$<br>± 2.5% of I at I>$I_r$ |
| | Reverse | 60% of Forward | ± 2.5 % of $I_r$ at I≤$I_r$<br>± 2.5% of I at I>$I_r$ |
| Level of harmonic restrain | | 20% or 32% | ± 5% |

| Parameter | Setting range | Accuracy |
|---|---|---|
| Characteristic angle<br>$I = I_{meas}/I_{set}$ | 65° lagging | ± 5° at 20 V and $I_{set}$= 35 % of $I_r$ |
| Normal inverse characteristic<br>$I = I_{meas}/I_{set}$ | $t = \frac{0.14}{I^{0.02} - 1} \cdot k$ | IEC 60255-3 class 5 ± 60 ms |
| Very inverse characteristic | $t = \frac{13.5}{I - 1} \cdot k$ | IEC 60255-3 class 7.5 ± 60 ms |
| Extremely inverse characteristic | $t = \frac{80}{I^2 - 1} \cdot k$ | IEC 60255-3 class 7.5 ± 60 ms |
| Logarithmic characteristic | $t = 5.8 - 1.35 \cdot \ln\frac{I}{I_N}$ | ± 5 % of t at I = (1.3-29) × $I_N$ |
| Switch onto fault active time, t4U | 0.000 - 60.000 s in steps of 1 ms | ± 0.5 % ± 10 ms |

# 7 Sensitive directional residual overcurrent protection (WEF1)

## 7.1 Application

In isolated networks or in networks with high impedance earthing, the phase to earth fault current is significantly smaller than the short circuit currents. In addition to this, the magnitude of the fault current is almost independent on the fault location in the network.

The protection uses the residual current component $3I_0 \cos\varphi$, where $\varphi$ is the angle between the residual current and the reference voltage, compensated with a characteristic angle. The characteristic angle is chosen to -90° in an isolated system. The characteristic angle is chosen to 0° in compensated systems.

## 7.2 Functionality

The function measures the residual current and voltage. The angle between the residual voltage and residual current (angle between 3I0 and -3U0 i.e U0 is 180 degrees adjusted) is calculated. This angle is used in two functions namely first to determine if the fault is in forward or reverse direction, and secondly to calculate the residual current component in the characteristic angle direction.

The residual current component in the characteristic angle direction is compared with the set operating value. If this current component is larger than the setting this is one criterion for function of the protection. The residual voltage is compared to a set operating value. If the measured voltage is larger than the setting this is another criterion for the operation of the protection. If both the criteria are fulfilled and the set time delay has elapsed, the function will give a trip signal.

Due to the demands on accuracy and sensitivity for this function, special current input transformers must be used.

## 7.3 Function block

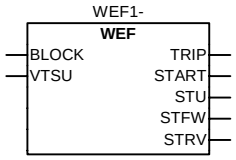

xx00000558.vsd

## 7.4 Logic diagram

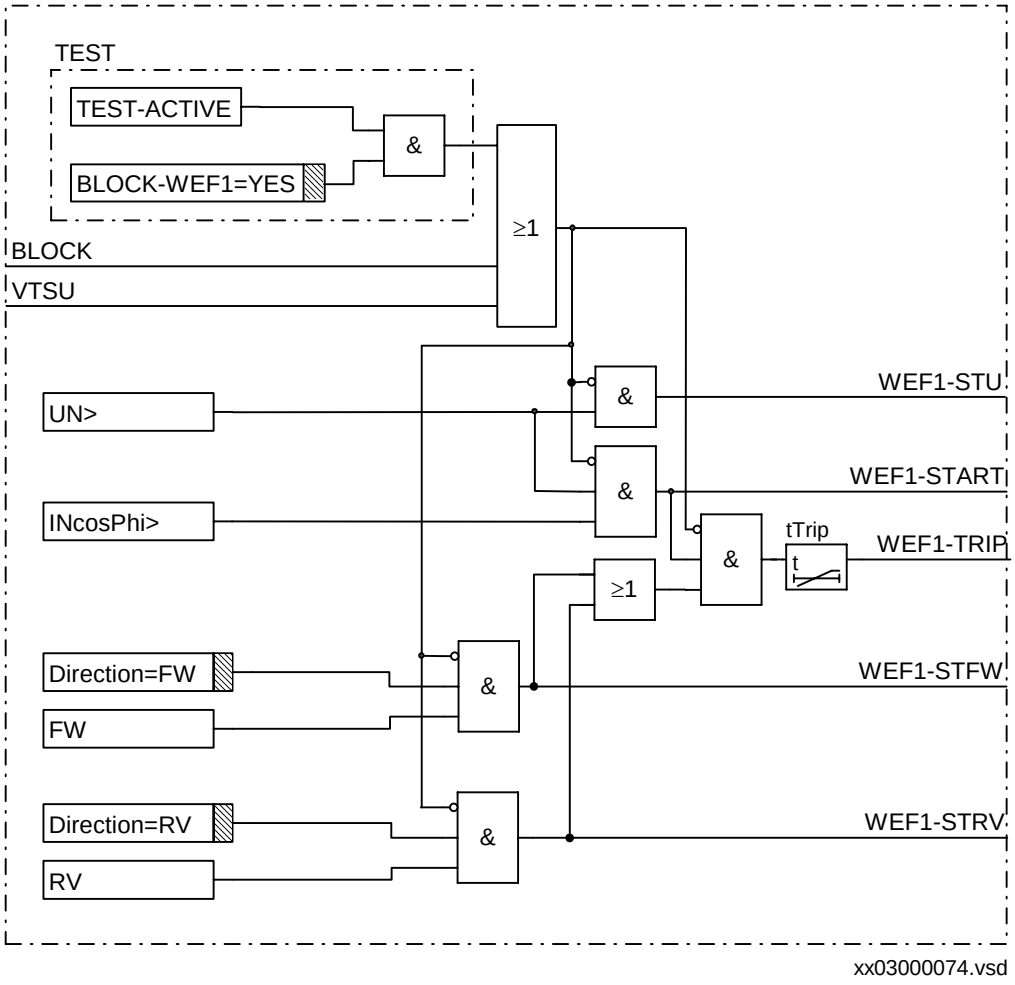


*Figure 73: Sensitive directional residual overcurrent protection function, simplified logic diagram*

## 7.5 Input and output signals

**Table 134: Input signals for the sensitive directional residual overcurrent protection (WEF1-) function**

| Signal | Description |
|---|---|
| BLOCK | Block the function |
| VTSU | Block the function by voltage circuit supervision |

Path in local HMI: ServiceReport/Functions/EarthFault/WattmetrEF1/FuncOutputs

**Table 135: Output signals for the sensitive directional residual overcurrent WEF1 (WEF1-) protection function**

| Signal | Description |
|---|---|
| TRIP | Trip output |
| START | Non directional start, $3U_0 > U_{set}$ and $3I_0 \cos \varphi > I_{set}$ |
| STU | Start $3U_0 > U_{set}$ |
| STFW | Forward direction start |
| STRV | Reverse direction start |

## 7.6 Setting parameters

Path in local HMI: Settings/Functions/Groupn/EarthFault/WattmetrEF1

**Table 136: Settings for the WEF1 (WEF1-) function**

| Parameter | Range | Default | Unit | Description |
|---|---|---|---|---|
| Operation | On / Off | Off | | Operation mode for WEF1 function |
| Direction | For-ward/Reverse | Forward | | Direction for trip |
| INcosPhi> | 3.0 - 2000.0 Step: 0.1 | 10.0 | % of Ib | Start current |
| UN> | 5.0 - 70.0 Step: 0.1 | 30.0 | % of Ub | Start voltage |
| IMeasured | I4, I5 | I4 | | Current signal used for the earth fault function |
| UMeasured | U4, U1+U2+U3 | U4 | | Voltage signal used for the earth fault function |
| RCA | -90.0 - 90.0 Step: 0.1 | 0.0 | degrees | Relay characteristic angle |
| tTrip | 0.000 - 60.000 Step: 0.001 | 0.000 | s | Trip delay |

## 7.7 Technical data

**Table 137: WEF1 - Sensitive directional residual overcurrent protection function**

| Function | Value | Accuracy |
|---|---|---|
| Operate current, IN> | (3.0 - 2000.0 ) % of Ib in steps of 0.1% | ± 2.5% of $I_r$ at $I \leq I_r$<br>± 2.5% of I at $I > I_r$ |
| Operate voltage, UN> | (5.0 - 70.0) % of Ub in steps of 0.1% | ± 2.5% of $U_r$ at $U \leq U_r$<br>± 2.5% of U at $U > U_r$ |
| Characteristic Angle | (-90.0 to +90.0) degrees in steps of 0.1 degrees | |
| Definite time delay, tTrip | (0.000 - 60.000) s in steps of 1 ms | ± 0.5% ± 10 ms |
| Reset ratio | > 90% typically | |

# 8 Sensitive directional residual power protection (WEF2)

## 8.1 Application

In isolated networks or in networks with high impedance earthing, the phase to earth fault current is significantly smaller than the short circuit currents. In addition to this, the magnitude of the fault current is almost independent on the fault location in the network.

The protection uses the residual power component $3U_0 .3I_0.\cos\varphi$, where $\varphi$ is the angle between the residual current and the reference voltage, compensated with a characteristic angle. The characteristic angle is chosen to -90° in an isolated system. The characteristic angle is chosen to 0° in compensated systems.

## 8.2 Functionality

The function measures the residual current and voltage. The angle between the residual voltage and residual current is calculated. This angle is used in two functions namely first to determine if the fault is in forward or reverse direction, and secondly to calculate the residual power component in the characteristic angle direction.

The residual voltage ($3U_0$) is compared with a setting value. The residual current ($3I_0$) is compared to a setting value. The residual power component in the characteristic angle direction ($S_N$) is compared to a power reference setting. If the power is larger than the setting this is one criterion for function of the protection. The voltage and current measurement are two other criteria that must be fulfilled for function. The information on power is the input to a dependent time delay function. The function will give a trip signal when all three criteria for function are fulfilled and the time delay has elapsed.

Due to the demands on accuracy and sensitivity for this function, special current input circuits must be used.

## 8.3 Function block

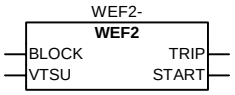

xx00000559.vsd

## 8.4 Logic diagram

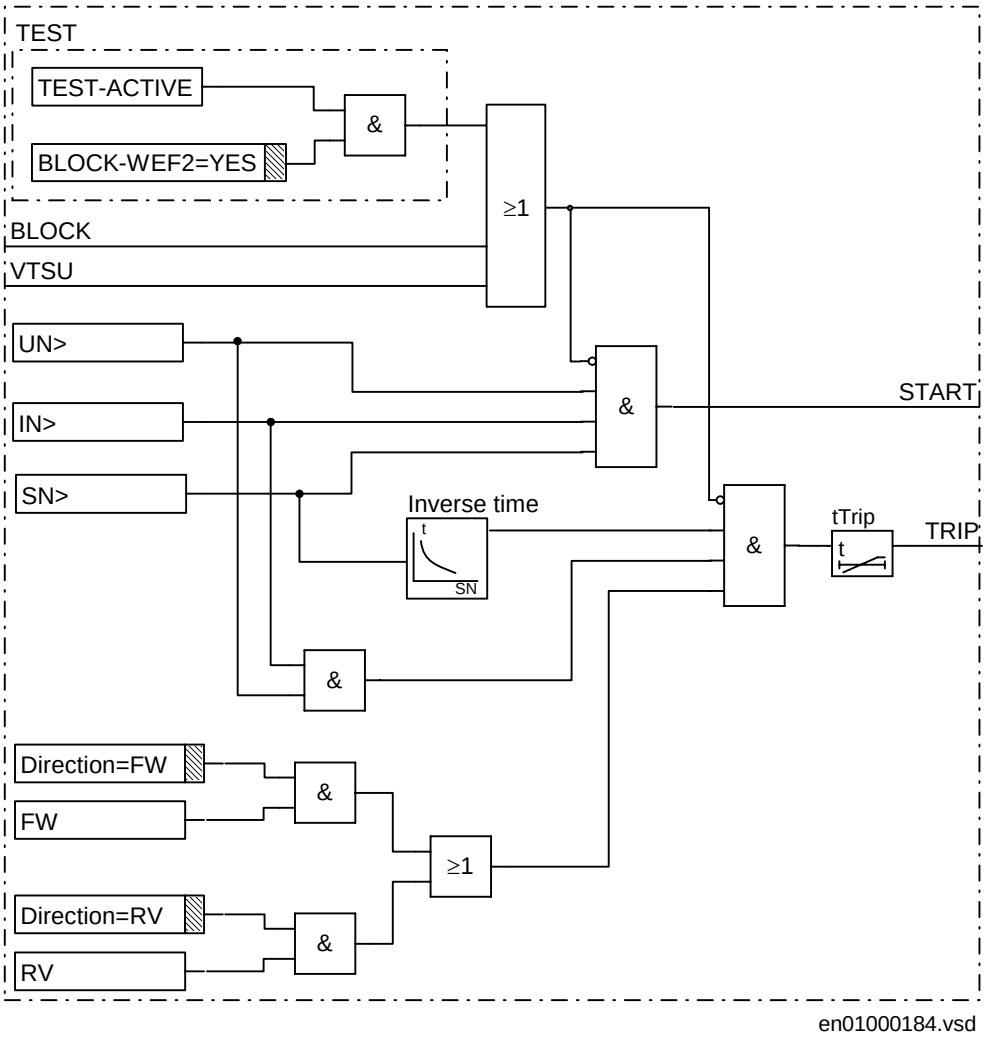


*Figure 74: Sensitive directional residual power protection function, simplified logic diagram*

## 8.5 Input and output signals

**Table 138: Input signals for the sensitive directional residual power protection (WEF2-) function block**

| Signal | Description |
|---|---|
| BLOCK | Block function |
| VTSU | Block function by voltage circuit supervision |

Path in local HMI: ServiceReport/Functions/EarthFault/WattmetrEF2/FuncOutputs

**Table 139: Output signals for the sensitive directional residual power protection WEF2 (WEF2-) function block**

| Signal | Description |
|---|---|
| TRIP | Trip output |
| START | Start for voltage, current and power |

## 8.6 Setting parameters

Path in local HMI: Settings/Functions/Groupn/EarthFault/WattmetrEF2

**Table 140: Settings for the WEF2 (WEF2-) function**

| Parameter | Range | Default | Unit | Description |
|---|---|---|---|---|
| Operation | On / Off | Off | | Operation mode for WEF2 function |
| Direction | For-ward/Reverse | Forward | | Direction for trip |
| RCA | -90.0 - 90.0 Step: 0.1 | 0.0 | degrees | Relay characteristic angle |
| SN> | 0.3 - 100.0 Step: 0.1 | 1.0 | % of Sb | Start real power |
| IN> | 5.0 - 400.0 Step: 0.1 | 10.0 | % of Ib | Start current |
| UN> | 1.0 - 70.0 Step: 0.1 | 5.0 | % of Ub | Start voltage |
| Sref | 5.0 - 50.0 Step: 0.1 | 15.0 | % of Sb | Reference power |
| k | 0.02 - 2.00 Step: 0.01 | 1.00 | | Time multiplier |
| tTrip | 0.000 - 60.000 Step: 0.001 | 0.000 | s | Independent trip delay |
| IMeasured | I4, I5 | I4 | | Current input used for the earth fault function |
| UMeasured | U4, U1+U2+U3 | U4 | | Voltage input used for the earth fault function |

## 8.7 Technical data

**Table 141: WEF2 - Sensitive directional residual power protection function**

| Function | Value | Accuracy |
|---|---|---|
| Operate current, IN> | (5.0 - 400.0) % of $I_b$ in steps of 0.1% | ± 2.5% of $I_r$ at $I \leq I_r$<br>± 2.5% of I at $I > I_r$ |
| Operate voltage, UN> | (1.0-70.0) % of $U_b$ in steps of 0.1% | ± 2.5% of $U_r$ at $U \leq U_r$<br>± 2.5% of U at $U > U_r$ |
| Characteristic angle | (-90.0 to +90.0) degrees in steps of 0.1 degrees | |
| Definite time delay, tTrip | (0.000-60.000) s in steps of 1 ms | ± 0.5% ± 10 ms |
| Inverse characteristic<br>$T_i = k \frac{S_{ref}}{S_{measured}}$ | k = (0.0-2.0) in steps of 0.01<br>Sref = (5.0 - 50.0) % of Sb in steps of 0.1% | IEC 60255-3 class 5 ± 60 ms |
| Reset ratio | > 90% typically | |

# 9 Scheme communication logic for residual overcurrent protection (EFC)

## 9.1 Application

The EFC directional comparison function contains logic for blocking overreaching and permissive overreaching schemes. The function is applicable together with a directional residual overcurrent protection in order to decrease the total operate time of a complete scheme.

One communication channel, which can transmit an on / off signal, is required in each direction. It is recommended to use the complementary additional communication logic EFCA, if the weak infeed and/or current reversal conditions are expected together with permissive overreaching scheme.

## 9.2 Functionality

The communication logic for residual overcurrent protection contains logics for blocking overreach and permissive overreach schemes.

In the blocking scheme a signal is sent to the remote end of the line if the directional element, in the directional residual overcurrent protection (sending end), detects the fault in the reverse direction. If no blocking signal is received and the directional element, in the directional residual overcurrent protection (receiving end), detects the fault in the forward direction, a trip signal will be sent after a settable time delay.

In the permissive overreach scheme a signal is sent to the remote end of the line if the directional element, in the directional residual overcurrent protection (sending end), detects the fault in the forward direction. If an acceleration signal is received and the directional element, in the directional residual overcurrent protection (receiving end), detects the fault in the forward direction, a trip signal will be sent, normally with no time delay. In case of risk for fault current reversal or weak end infeed, an additional logic can be used to take care of this.

## 9.3 Function block

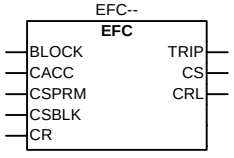


xx00000204.vsd

## 9.4 Logic diagram

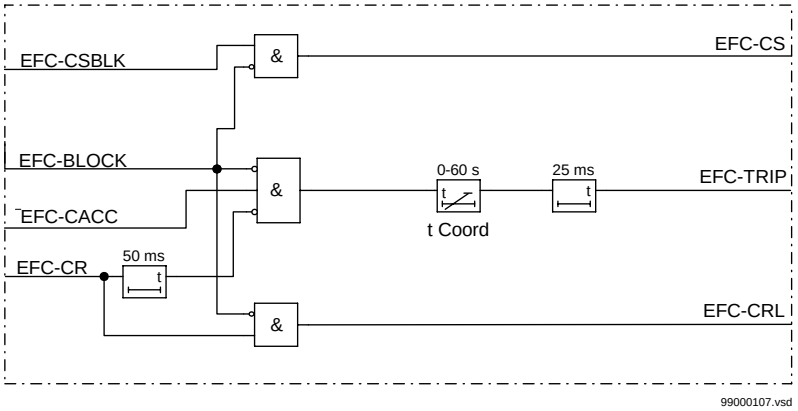


*Figure 75: Simplified logic diagram, Scheme type = blocking*

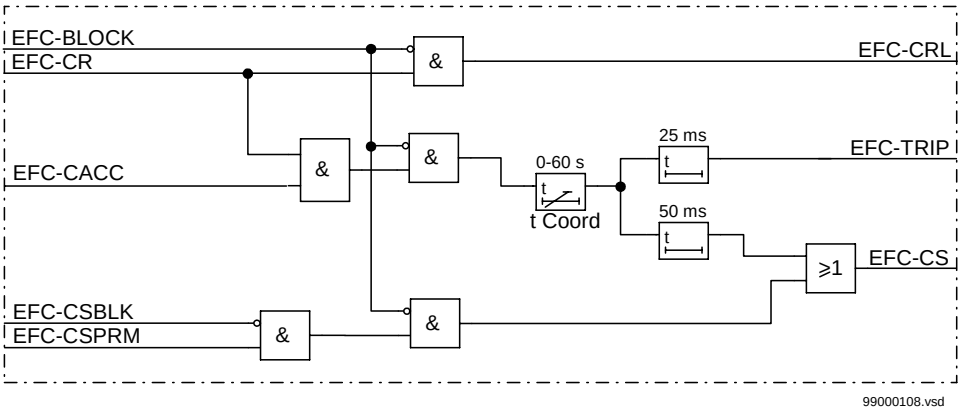


*Figure 76: Simplified logic diagram, Scheme type = permissive*

## 9.5 Input and output signals

**Table 142: Input signals for the EFC (EFC--) function block**

| Signal | Description |
|---|---|
| BLOCK | Block function |
| CACC | Permits the operation when high |
| CSPRM | Initiates sending of carrier signal in permissive scheme |
| CSBLK | Initiates sending of carrier signal in blocking scheme |
| CR | Information on received carrier signal |

Path in local HMI: ServiceReport/Functions/EarthFault/EFCom/FuncOutputs

**Table 143: Output signals for the EFC (EFC--) function block**

| Signal | Description |
|---|---|
| TRIP | Trip by communication scheme logic |
| CS | Carrier send by communication scheme logic |
| CRL | Carrier receive by the communication scheme logic |

## 9.6 Setting parameters

Path in local HMI: Settings/Functions/Groupn/EarthFault/EFCom

**Table 144: Setting parameters for the scheme communication logic EFC (EFC--) function**

| Parameter | Range | Default | Unit | Description |
|---|---|---|---|---|
| Operation | Off, On | Off | - | Operating mode for EFC function |
| SchemeType | Permissive, Blocking | Permissive | - | Scheme type, mode of operation |
| tCoord | 0.000-60.000 Step: 0.001 | 0.050 | s | Communication scheme coordination time |

## 9.7 Technical data

**Table 145: EFC - Scheme communication logic for residual overcurrent protection**

| Parameter | Setting range | Accuracy |
|---|---|---|
| Coordination timer | 0.000-60.000 s in steps of 1 ms | ± 0.5% ± 10 ms |

# 10 Current reversal and weak end infeed logic for residual overcurrent protection (EFCA)

## 10.1 Application

The EFCA additional communication logic is a supplement to the EFC scheme communication logic for the residual overcurrent protection.

To achieve fast fault clearing for all earth faults on the line, the directional earth-fault protection function can be supported with logic, that uses communication channels. REx 5xx terminals have for this reason available additions to scheme communication logic.

If parallel lines are connected to common busbars at both terminals, overreaching permissive communication schemes can trip unselectively due to fault current reversal. This unwanted tripping affects the healthy line when a fault is cleared on the other line. This lack of security can result in a total loss of interconnection between the two buses.To avoid this type of disturbance, a fault current-reversal logic (transient blocking logic) can be used.

Permissive communication schemes for residual overcurrent protection, can basically operate only when the protection in the remote terminal can detect the fault. The detection requires a sufficient minimum residual fault current, out from this terminal. The fault current can be too low due to an opened breaker or high positive and/or zero sequence source impedance behind this terminal. To overcome these conditions, weak end infeed (WEI) echo logic is used.

## 10.2 Design

The reverse directed signal from the directional residual overcurrent function, starts the operation of a current reversal logic. The output signal, from the logic, will be activated, if the fault has been detected in reverse direction for more than the tPickUp time set on the corresponding timers. The tDelay timer delays the reset of the output signal. The signal blocks the operation of the overreach permissive scheme for residual current, and thus prevents unwanted operation due to fault current reversal.

The weak end infeed logic uses normally a forward and reverse signal from the directional residual overcurrent function. The weak end infeed logic echoes back the received permissive signal, if none of the directional measuring elements have been activated during the last 200 ms. Further, it can be set to give signal to trip the breaker if the echo conditions are fulfilled and the residual voltage is above the set operate value for $3U_0>$.

## 10.3 Function block

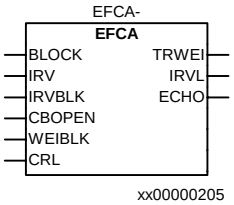

## 10.4 Logic diagram

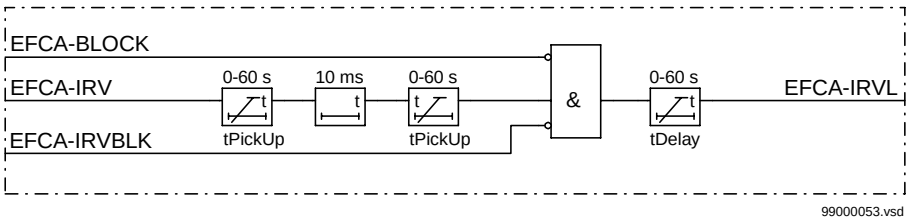


*Figure 77: Simplified logic diagram, current reversal logic*

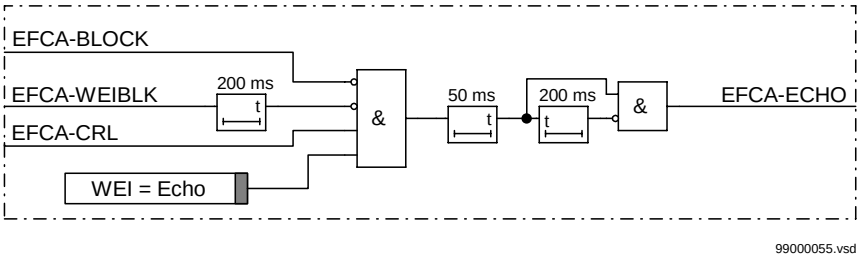


*Figure 78: Simplified logic diagram, weak end infeed - Echo logic*

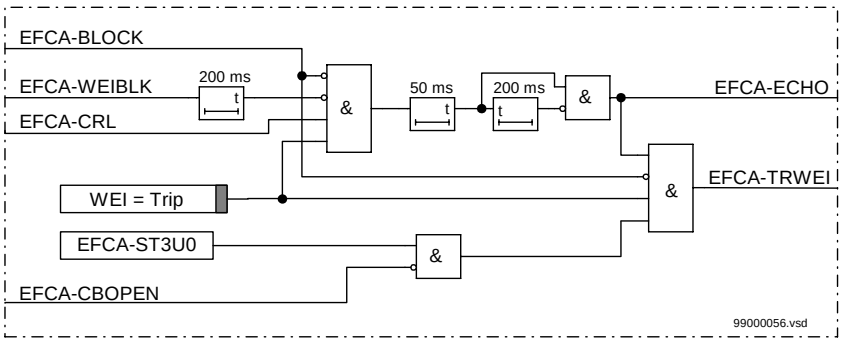


*Figure 79: Simplified logic diagram, weak end infeed - Trip logic*

## 10.5 Input and output signals

**Table 146: Input signals for the EFCA (EFCA-) function block**

| Signal | Description |
|---|---|
| BLOCK | Blocking of function |
| IRV | Activation of current reversal logic |
| IRVBLK | Blocking of current reversal logic |
| WEIBLK | Blocking of weak end infeed logic |
| CRL | Carrier received for weak end infeed logic |
| CBOPEN | Blocking of trip when breaker is open |

Path in local HMI: ServiceReport/Functions/EarthFault/ComIRevWeiEF/FuncOutputs

**Table 147: Output signals for the EFCA (EFCA-) function block**

| Signal | Description |
|---|---|
| TRWEI | Trip by weak end infeed logic |
| IRVL | Operation of current reversal logic |
| ECHO | Carrier send by weak end infeed logic |

## 10.6 Setting parameters

Path in local HMI: Settings/Functions/Groupn/EarthFault/ComIRevWeiEF

**Table 148: Setting parameters for the current reversal and weak end infeed logic for residual overcurrent protection EFCA (EFCA-) function**

| Parameter | Range | Default | Unit | Description |
|---|---|---|---|---|
| CurrRev | Off, On | Off | - | Operating mode for current reversal logic |
| tPickUp | 0.000-60.000<br>Step: 0.001 | 0.000 | s | Current reversal pickup timer |
| tDelay | 0.000-60.000<br>Step: 0.001 | 0.100 | s | Current reversal delay timer |
| WEI | Off, Trip, Echo | Off | - | Operating mode of weak end infeed logic |
| U> | 5-70<br>Step: 1 | 25 | % of U1b | Operate phase voltage for WEI trip |

## 10.7 Technical data

**Table 149: EFCA - Current reversal and weak end infeed logic for residual overcurrent protection**

| Parameter | Setting range | Accuracy |
|---|---|---|
| Operate voltage for WEI trip, U> | 5-70 % of U1b in steps of 1% | ± 5% of set value |
| Current reversal pickup timer, tPickUp | 0.000-60.000 s in steps of 1 ms | ± 0.5% ± 10 ms |
| Current reversal delay timer, tDelay | 0.000-60.000 s in steps of 1 ms | ± 0.5% ± 10 ms |

# 11 Thermal phase overload protection (THOL)

## 11.1 Application

Load currents that exceed the permissible continuous value may cause damage to the conductors and isolation due to overheating. The permissible load current will vary with the ambient temperature.

The THOL thermal overcurrent function supervises the phase currents and provides a reliable protection against damage caused by excessive currents. The temperature compensation gives a reliable thermal protection even when the ambient temperature has large variations.

## 11.2 Functionality

The final temperature rise of an object relative the ambient temperature is proportional to the square of the current. The rate of temperature rise is determined by the magnitude of the current and the thermal time constant of the object. The same time constant determines the rate of temperature decrease when the current is decreased.

The thermal overload function uses the highest phase current. The temperature change is continuously calculated and added to the figure for the temperature stored in the thermal memory. When temperature compensation is used, the ambient temperature is added to the calculated temperature rise. If no compensation is used, $20^{o}$ C is added as a fixed value. The calculated temperature of the object is then compared to the set values for alarm and trip.

The information on the ambient temperature is received via a transducer input with for example 0 - 10 mA or 4 - 20 mA.

The output signal THOL--TRIP has a duration of 50 ms. The output signal THOL--START remains activated as long as the calculated temperature is higher than the set trip value minus a settable temperature difference TdReset (hysteresis). The output signal THOL--ALARM has a fixed hysteresis of $5^{o}$ C.

## 11.3 Function block

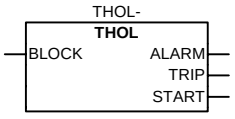


xx00000634.vsd

## 11.4 Logic diagram

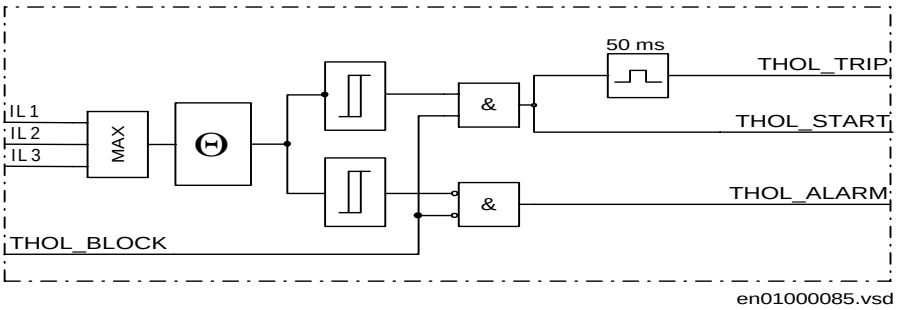


*Figure 80: Thermal overload protection, simplified logic diagram*

## 11.5 Input and output signals

**Table 150: Input signals for the THOL (THOL-) function block**

| Signal | Description |
|---|---|
| BLOCK | Block of the thermal overload function |

Path in local HMI: ServiceReport/Functions/ThermOverLoad/FuncOutputs

**Table 151: Output signals for the THOL (THOL-) function block**

| Signal | Description |
|---|---|
| ALARM | Alarm signal from the thermal overload function |
| TRIP | Trip signal from the thermal overload function (pulse) |
| START | Start signal which is reset when the temperature drops below the resetting level |

## 11.6 Setting parameters

Path in local HMI: Settings/Functions/Groupn/ThermOverLoad

**Table 152: Settings for the thermal overload protection THOL (THOL-) function**

| Parameter | Range | Default | Unit | Description |
|---|---|---|---|---|
| Operation | Off, NonComp, Comp | Off | - | Operating mode for THOL function |
| IBase | 10-200 Step: 1 | 100 | % of I1b | Base current |
| TBase | 0-100 Step: 1 | 50 | ÃÂ°C | Temperature rise at base current |
| tau | 1-62 Step: 1 | 30 | min | Thermal time constant |
| TAlarm | 50-150 Step: 1 | 80 | ÃÂ°C | Alarm level |
| TTrip | 50-150 Step: 1 | 100 | ÃÂ°C | Trip level |
| TdReset | 5-30 Step: 1 | 10 | ÃÂ°C | Trip hystereses |

**Table 153: Settings for thermal overload protection (THOL), mA input**

| Parameter | Range | Default | Unit | Description |
|---|---|---|---|---|
| MI11-I_Max | -25.00-25.00 Step: 0.01 | 20.00 | mA | Max current of transducer to Input 1 Can only be set from PST |
| MI11-I_Min | -25.00-25.00 Step: 0.01 | 4.00 | mA | Min current of transducer to Input 1 Can only be set from PST |
| MI11-I_MaxValue | -1000.00-1000.00 Step: 0.01 | 20.00 | ÃÂ°C | Max primary value corr. to I_Max, Input 1 Can only be set from PST |
| MI11-I_MinValue | -1000.00-1000.00 Step: 0.01 | 4.00 | ÃÂ°C | Min primary value corr. to I_Min, Input 1 Can only be set from PST |

## 11.7 Technical data

**Table 154: THOL - Thermal phase overload protection**

| Function | Setting range | Accuracy |
|---|---|---|
| Mode of operation | Off / NonComp / Comp<br>( Function blocked/No temp. compensation/Temp. comp.) | |
| Base current<br>IBase | (10 - 200 ) % of I1b in steps of 1 % | ± 2.5% of $I_r$ |
| Temperature rise at IBase<br>TBase | (0 - 100) °C in steps of 1° C | ± 1 °C |
| Time constant<br>tau | (1 - 62) min in steps of 1 min | ± 1 min |
| Alarm temperature<br>TAlarm | (50 - 150) °C in steps of 1°C | |
| Trip temperature<br>TTrip | (50 - 150) °C in steps of 1 °C | |
| Temp. difference for reset of trip<br>TdReset | (5 - 30) °C in steps of 1°C | |

**Table 155: Thermal overload protection mA input**

| Function | Setting range | Accuracy |
|---|---|---|
| Upper value for mA input<br>MI11-I_Max | -25.00 - 25.00 mA in steps of 0.01 mA | ± 0.5% of set value |
| Lower value for mA input<br>MI11-I_Min | -25.00 - 25.00 mA in steps of 0.01 mA | +/- 0.5% of set value |
| Temp. corresponding to the MI11-I_Max setting<br>MI11-MaxValue | -1000 - 1000 °C in steps of 1 °C | +/- 1% of set value +/- 1 °C |
| Temp. corresponding to the MI11-I_Min setting<br>MI11-MinValue | -1000 - 1000° C in steps of 1 °C | +/- 1% of set value +/- 1 °C |

# 12 Breaker failure protection (BFP)

## 12.1 Application

In many protection applications local redundancy is used. One part of the fault clearance system is however never duplicated, namely the circuit breaker. Therefore a breaker failure protection can be used.

The breaker failure protection is initiated by trip signals from different protection functions within or outside the protection terminal. When a trip signal is sent to the breaker failure protection first, with no or a very short delay, a re-trip signal can be sent to the protected breaker. If fault current is flowing through the breaker still after a setting time a back-up trip signal is sent to the adjacent breakers. This will ensure fault clearance also if the circuit breaker is out of order.

## 12.2 Design

The breaker failure protection function is initiated by the trip commands from protection functions placed either inside the same terminal or externally, by connection to appropriate binary inputs. A dedicated input is available for general starting.

Three separate functional inputs are also available for single-phase starting

The operate value of the phase segregated current measuring elements is settable within a wide range. Three independent timers t2 are available for phase segregated breaker failure detection.

An additional timer t1 for retrip command is available. Dedicated setting allows to enable or disable the retrip or to perform it by current check or not. Retrip to the faulty circuit breaker can be issued single phase or three phase.

Special adaptive algorithm (ASD), together with RMS measurement, allow a fast resetting time of the current measuring elements. The current measurement is stabilised against transients which can cause unwanted operation with saturated current transformers.

## 12.3 Function block

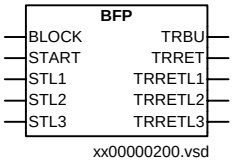

## 12.4 Logic diagram

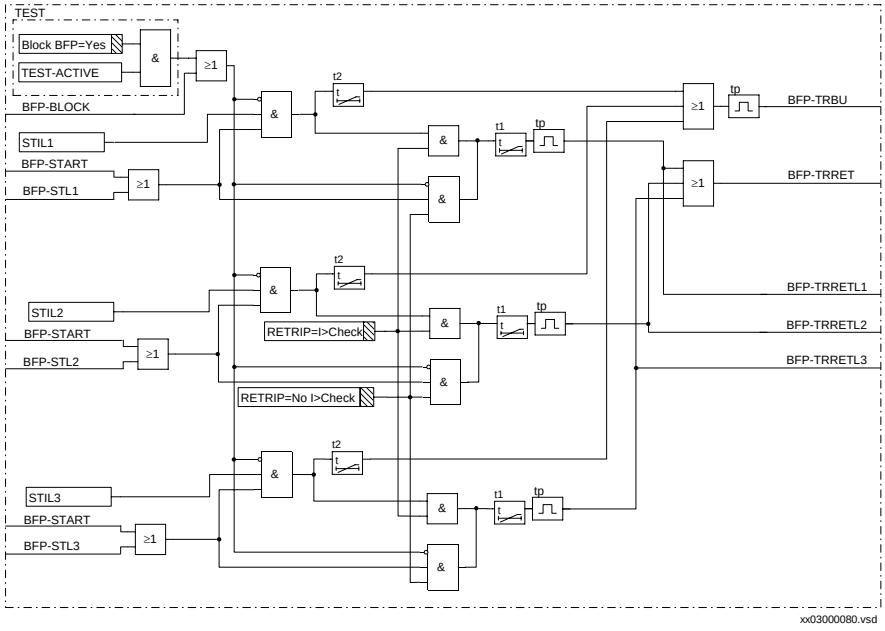


*Figure 81: Logic diagram for breaker failure protection*

## 12.5 Input and output signals

**Table 156: Input signals for the breaker failure protection (BFP--) function block**

| Signal | Description |
|---|---|
| BLOCK | Block function |
| START | Start function |
| STL1 | Start phase L1 |
| STL2 | Start phase L2 |
| STL3 | Start phase L3 |

Path in local HMI: ServiceReport/Functions/BreakerFailure/FuncOutputs

**Table 157: Output signals for the breaker failure protection (BFP--) function block**

| Signal | Description |
|---|---|
| TRBU | Backup trip |
| TRRET | Retrip |
| TRRETL1 | Retrip by phase L1 |
| TRRETL2 | Retrip by phase L2 |
| TRRETL3 | Retrip by phase L3 |

## 12.6 Setting parameters

Path in local HMI: Settings/Functions/Groupn/BreakerFailure

**Table 158: Setting parameters for the breaker failure protection BFP (BFP--) function**

| Parameter | Range | Default | Unit | Description |
|---|---|---|---|---|
| Operation | Off, On | Off | | Operating mode for BFP function |
| IP> | 5-200<br>Step: 1 | 100 | % of I1b | Operating phase current |
| t2 | 0.000-60.000<br>Step: 0.001 | 0.200 | s | Delay timer for backup trip |
| RetripType | Retrip Off, I> Check, No I> Check | Retrip Off | | Operating mode of retrip logic |
| t1 | 0.000-60.000<br>Step: 0.001 | 0.050 | s | Delay timer for retrip |

## 12.7 Technical data

**Table 159: BFP - Breaker failure protection**

| Parameter | Setting range | Accuracy |
|---|---|---|
| Operate current, IP> (one measuring element per phase) | 5-200% of I1b in steps of 1% | ± 2.5% of $I_r$ at $I \leq I_r$<br>± 2.5% of I at $I > I_r$ |
| Retrip time delay t1 | 0.000-60.000 s in steps of 1 ms | ± 0.5% ± 10 ms |
| Back-up trip time delay t2 | 0.000-60.000 s in steps of 1 ms | ± 0.5% ± 10 ms |

| Parameter | Value |
|---|---|
| Trip operate time | Max 18 ms |
| Operate time for current detection | Max 10 ms |

# Chapter 6 Voltage

### About this chapter

This chapter describes the voltage protection functions.

# 1 Time delayed undervoltage protection (TUV)

## 1.1 Application

The time delayed undervoltage protection function, TUV, is applicable in all situations, where reliable detection of low phase voltages is necessary. The function can also be used as a supervision and fault detection function for some other protection functions, to increase the security of a complete protection system.

## 1.2 Function block

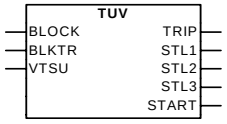


xx00000207.vsd

## 1.3 Logic diagram

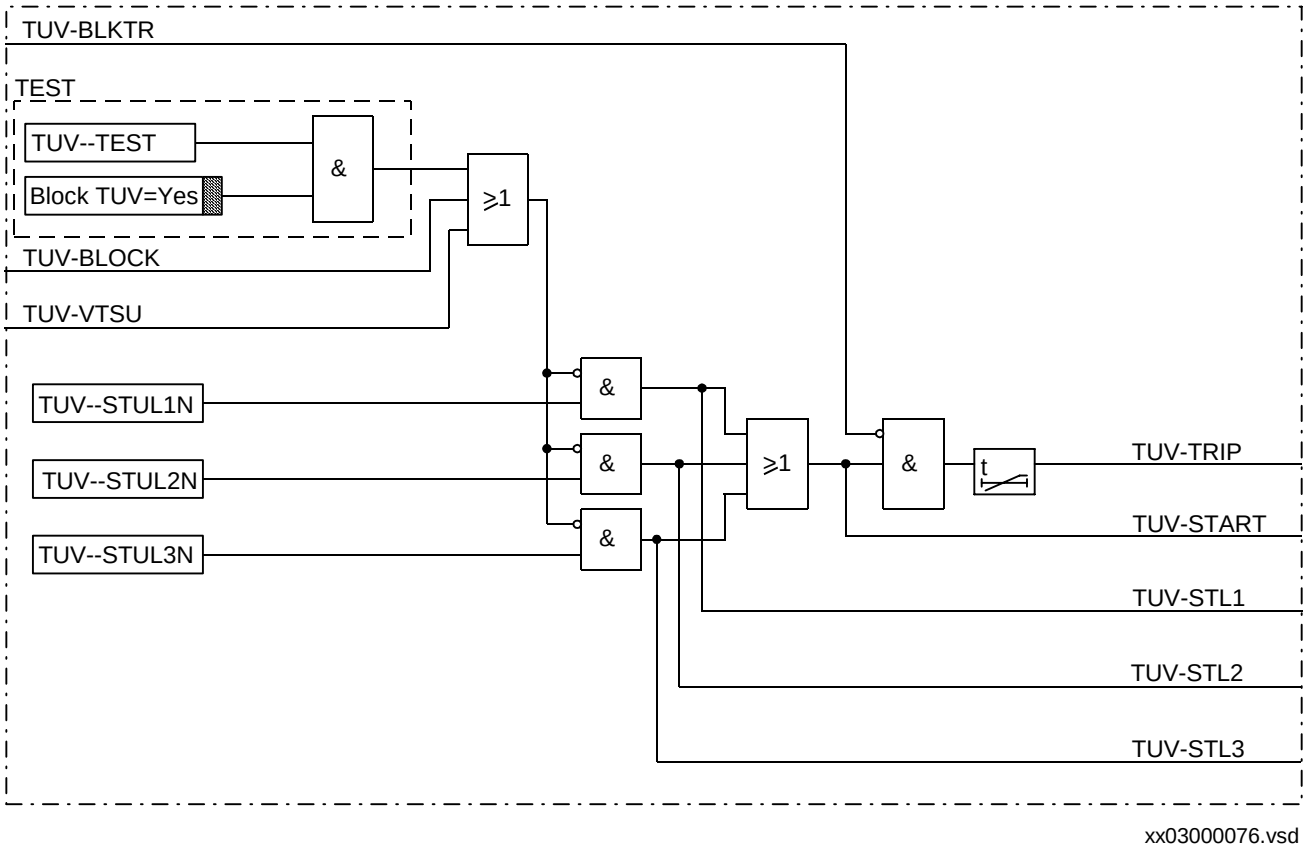


*Figure 82: Undervoltage protection - simplified logic diagram*

## 1.4 Input and output signals

**Table 160: Input signals for the TUV (TUV--) function block**

| Signal | Description |
|---|---|
| BLOCK | Block undervoltage function |
| BLKTR | Block of trip from time delayed undervoltage function |
| VTSU | Block from voltage transformer circuit supervision |

Path in local HMI: ServiceReport/Functions/TimeDelayUV/FuncOutputs

**Table 161: Output signals for the TUV (TUV--) function block**

| Signal | Description |
|---|---|
| TRIP | Trip by time delayed undervoltage function |
| STL1 | Start phase undervoltage phase L1 |
| STL2 | Start phase undervoltage phase L2 |
| STL3 | Start phase undervoltage phase L3 |
| START | Start phase undervoltage |

## 1.5 Setting parameters

Path in local HMI: Settings/Functions/Groupn/TimeDelayUV

**Table 162: Setting parameters for the time delayed undervoltage protection TUV (TUV--) function**

| Parameter | Range | Default | Unit | Description |
|---|---|---|---|---|
| Operation | Off, On | Off | - | Operating mode for TUV function |
| UPE< | 10-100<br>Step: 1 | 70 | % of U1b | Operate phase voltage |
| t | 0.000-60.000<br>Step: 0.001 | 0.000 | s | Time delay |

## 1.6 Technical data

**Table 163: TUV - Time delayed undervoltage protection**

| Function | Setting range | Accuracy |
|---|---|---|
| Operate voltage, UPE< | (10-100) % of U1b in steps of 1% | ± 2.5 % of $U_r$ |
| Time delay | (0.000-60.000) s in steps of 1ms | ± 0.5 % ±10 ms |

# 2 Time delayed overvoltage protection (TOV)

## 2.1 Application

The time delayed phase overvoltage protection is used to protect the electrical equipment and its insulation against overvoltage by measuring three phase voltages. In this way, it prevents the damage to the exposed primary and secondary equipment in the power systems.

The residual overvoltage protection function is mainly used in distribution networks, mainly as a backup protection for the residual overcurrent protection in the line feeders, to secure the disconnection of earth-faults.

## 2.2 Functionality

The phase overvoltage protection function continuously measures the three phase voltages and initiates the corresponding output signals if the measured phase voltages exceed the preset value (starting) and remain high longer than the time delay setting on the timers (trip). This function also detects the phases which caused the operation.

The residual overvoltage protection function calculates the residual voltage (3U0) from the measuring three phase voltages and initiates the corresponding output signals if the residual voltage is larger than the preset value (starting) and remains high longer than the time delay setting (trip).

## 2.3 Function block

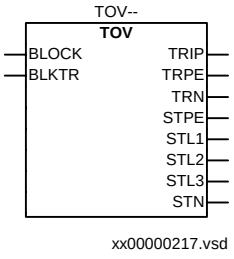


*Figure 83: TOV function block, phase and residual overvoltage*

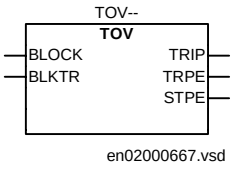

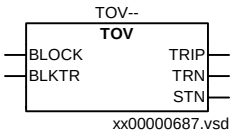


*Figure 84: TOV function block residual overvoltage*

## 2.4 Logic diagram

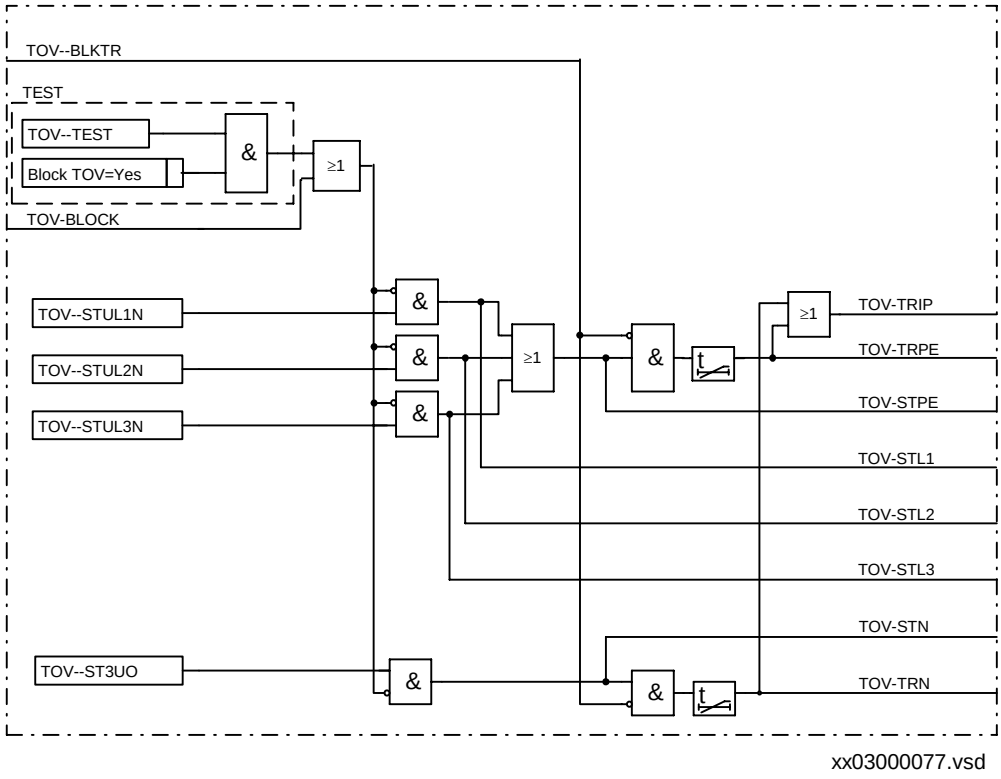


*Figure 85: TOV, logic diagram*

## 2.5 Input and output signals

**Table 164: Input signals for the TOV (TOV--) function block**

| Signal | Description |
|---|---|
| BLOCK | Block of time delayed overvoltage function |
| BLKTR | Block of trip output from time delayed overvoltage function |

Path in local HMI: ServiceReport/Functions/TimeDelayOV/FuncOutputs

**Table 165: Output signals for the time delayed overvoltage protection TOV (TOV--) function**

| Signal | Description |
|---|---|
| TRIP | General trip output from TOV function block |
| TRPE | Trip by phase overvoltage function |
| TRN | Trip by residual overvoltage function |
| STPE | Start phase overvoltage function |
| STL1 | Start phase overvoltage phase L1 |
| STL2 | Start phase overvoltage phase L2 |
| STL3 | Start phase overvoltage phase L3 |
| STN | Start by residual overvoltage function |

## 2.6 Setting parameters

Path in local HMI: Settings/Functions/Groupn/TimeDelayOV

**Table 166: Setting parameters for time delayed overvoltage TOV (TOV--) function**

| Parameter | Range | Default | Unit | Description |
|---|---|---|---|---|
| Operation | Off, On | Off | - | Operating mode for TOV function |
| UPE> | 50-200<br>Step: 1 | 120 | % of U1b | Operate value for the phase overvoltage function |
| t | 0.000-60.000<br>Step: 0.001 | 0.000 | s | Time delay of the phase overvoltage function |
| 3U0> | 5-100<br>Step: 1 | 30 | % of U1b | Operate value for the neutral overvoltage function |
| t | 0.000-60.000<br>Step: 0.001 | 0.000 | s | Time delay of the neutral overvoltage function |

## 2.7 Technical data

**Table 167: TOV - Time delayed overvoltage protection**

| Function | | Setting range | Accuracy |
|---|---|---|---|
| Operate voltage U> | Phase measuring elements | (50-170)% of U1b in steps of 1% | ± 2.5 % of $U_r$ at $U \leq U_r$<br>± 2.5 % of U at $U > U_r$ |
| Time delay | Phase measuring elements | (0.000-60.000) s in steps of 1ms | ± 0.5 % ± 10 ms |
| Operate voltage U> | Residual measuring elements | (5-100)% of U1b in steps of 1% | ± 2.5 % of $U_r$ at $U \leq U_r$<br>± 2.5 % of U at $U > U_r$ |
| Time delay | Residual measuring elements | (0.000-60.000) s in steps of 1ms | ± 0.5 % ± 10 ms |

# Chapter 7 Power system supervision

**About this chapter**

This chapter describes the power system supervision functions.

# 1 Broken conductor check (BRC)

## 1.1 Application

The main purpose of the BRC broken conductor check function is the detection of broken conductors on protected power lines and cables (series faults). It is also able to detect interruptions in the secondary current circuits.

## 1.2 Functionality

The BRC function detects a broken conductor condition by detecting the non symmetry between currents in the three phases. It does this by measuring the difference between the maximum and minimum phase currents, i.e. it compares the magnitude of the minimum current with that of the maximum current, and gives an output if the minimum current is less than 80% of the maximum current for a set time interval. At the same time, the highest current must be higher than a set percentage of the terminal rated current.

## 1.3 Function block

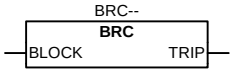


xx00000208.vsd

## 1.4 Logic diagram

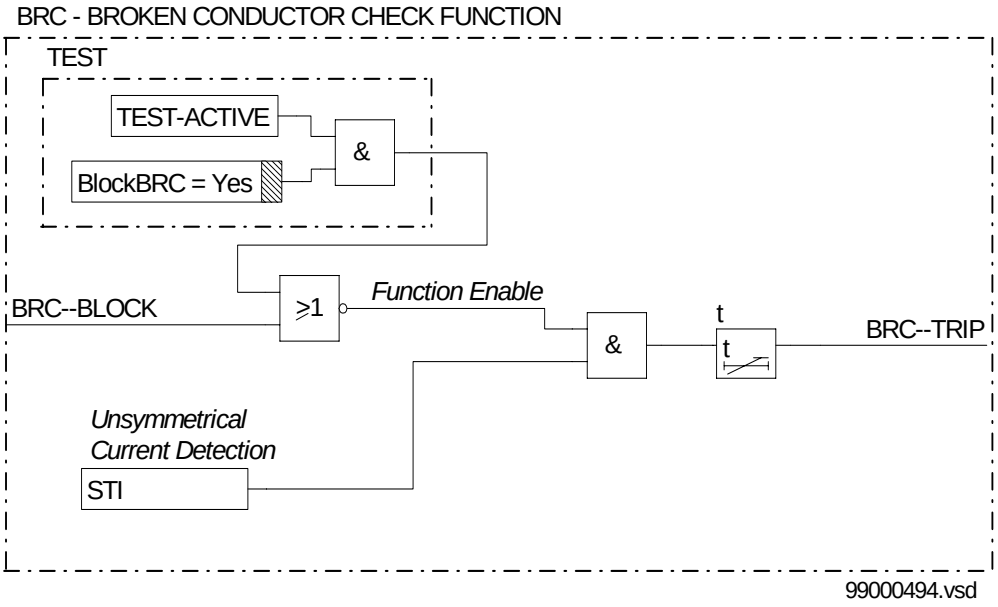


*Figure 86: Simplified logic diagram of broken conductor check function*

## 1.5 Input and output signals

**Table 168: Input signals for the BRC (BRC--) function block**

| Signal | Description |
|---|---|
| BLOCK | Block of BRC function |

Path in local HMI: ServiceReport/Functions/BrokenConduct/FuncOutputs

**Table 169: Output signals for BRC (BRC--) function block**

| Signal | Description |
|---|---|
| TRIP | Trip by BRC function |

## 1.6 Setting parameters

Path in local HMI: Settings/Functions/Groupn/BrokenConduct

**Table 170: Setting parameters for the broken conductor check BRC (BRC--) function**

| Parameter | Range | Default | Unit | Description |
|---|---|---|---|---|
| Operation | Off, On | Off | - | Broken conductor function |
| IP> | 10-100<br>Step: 1 | 10 | % of I1b | Operating phase current |
| t | 0.000-60.000<br>Step: 0.001 | 20.000 | s | Time delay before giving output for which detected broken conductor conditions must persist |

## 1.7 Technical data

**Table 171: BRC - Broken conductor check**

| Parameter | Setting range | Accuracy |
|---|---|---|
| Minimum level of highest phase current for operation, IP> | 10-100% of I1b in steps of 1% | ± 2.5% of $I_r$ |
| Output time delay, t | 0.000-60.000 s in steps of 0.001s | ± 0.5% ± 10ms |

# 2 Loss of voltage check (LOV)

## 2.1 Application

The loss of voltage detection, LOV, is suitable for use in networks with an automatic restoration function. The LOV function issues a three-pole trip command to the circuit breaker, if all three phase voltages fall below the set value for a time longer than 7 seconds, and the circuit breaker remains closed.

## 2.2 Functionality

The operation of LOV function is based on line voltage measurement. The function is provided with a logic, which automatically recognises if the line was restored for at least three seconds before starting the seven seconds timer. Additionally, the function is automatically blocked if only one or two phase voltages have been detected low for more than 10 seconds. The LOV function operates again only if the line has been fully energised.

Operation of LOV function is also inhibited by fuse failure and open circuit breaker information signals, by their connection to dedicated inputs of the function block.

The operation of the function is supervised by the fuse-failure function and the information about the closed position of the associated circuit breaker.

## 2.3 Function block

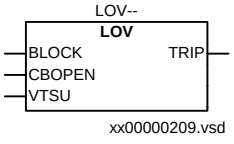

## 2.4 Logic diagram

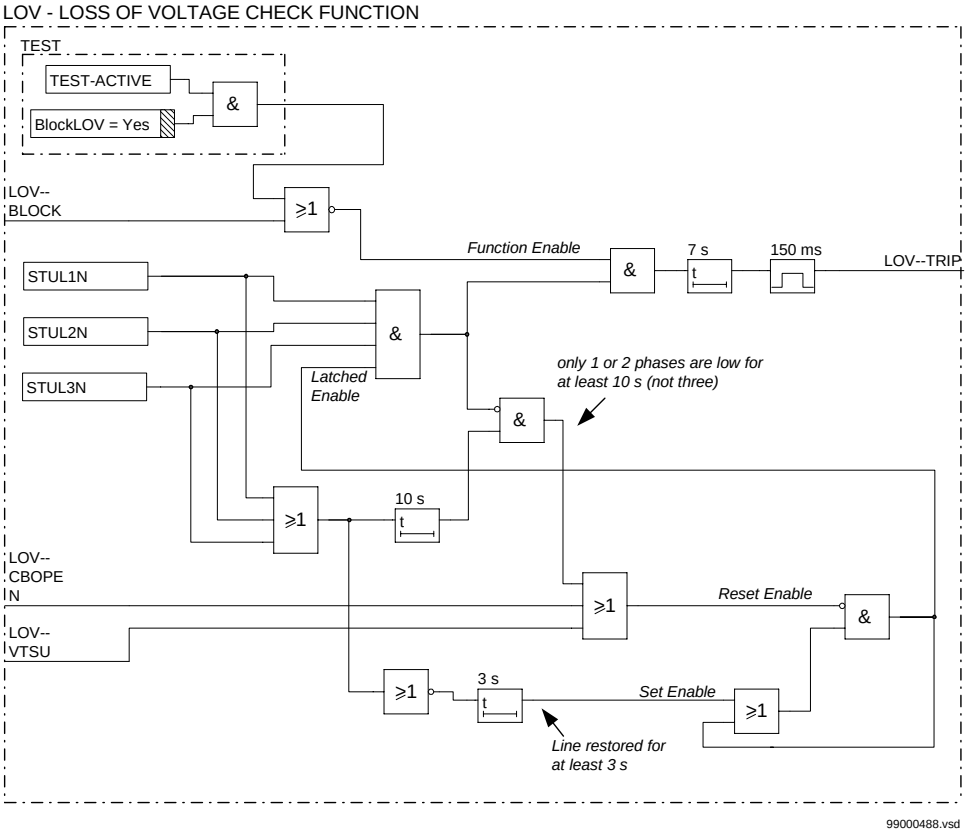


*Figure 87: Simplified logic diagram of loss of voltage check protection function*

## 2.5 Input and output signals

**Table 172: Input signals for the LOV (LOV--) function block**

| Signal | Description |
|---|---|
| BLOCK | Block of loss of voltage check |
| CBOPEN | Circuit breaker open |
| VTSU | Block of loss of voltage check from voltage circuit supervision |

Path in local HMI: ServiceReport/Functions/LossOfVoltage/FuncOutputs

**Table 173: Output signals for the LOV (LOV--) function block**

| Signal | Description |
|---|---|
| TRIP | Trip by loss of voltage check |

## 2.6 Setting parameters

Path in local HMI: Settings/Function/Groupn/LossOfVoltage

**Table 174: Setting parameters for the loss of voltage check LOV (LOV--) function**

| Parameter | Range | Default | Unit | Description |
|---|---|---|---|---|
| Operation | Off, On | Off | - | Operating mode for LOV function |
| UPE< | 10-100<br>Step: 1 | 70 | % of U1b | Operating phase voltage |

## 2.7 Technical data

**Table 175: LOV - Loss of voltage check**

| Parameter | Setting range | Accuracy |
|---|---|---|
| Operate voltage, UPE< | 10-100% of U1b in steps of 1% | ± 2.5% of $U_r$ |

# 3 Overload supervision (OVLD)

## 3.1 Application

The overload protection, OVLD, prevents excessive loading of power transformers, lines and cables.

Alternative application is the detection of primary current transformer overload, as they usually can withstand a very small current beyond the rated value.

## 3.2 Functionality

The function continuously measures the three phase currents flowing through the terminal. If any of the three currents is beyond the preset overcurrent threshold for a time longer than the preset value, a trip signal is activated.

## 3.3 Function block

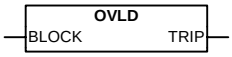


xx00000210.vsd

## 3.4 Logic diagram

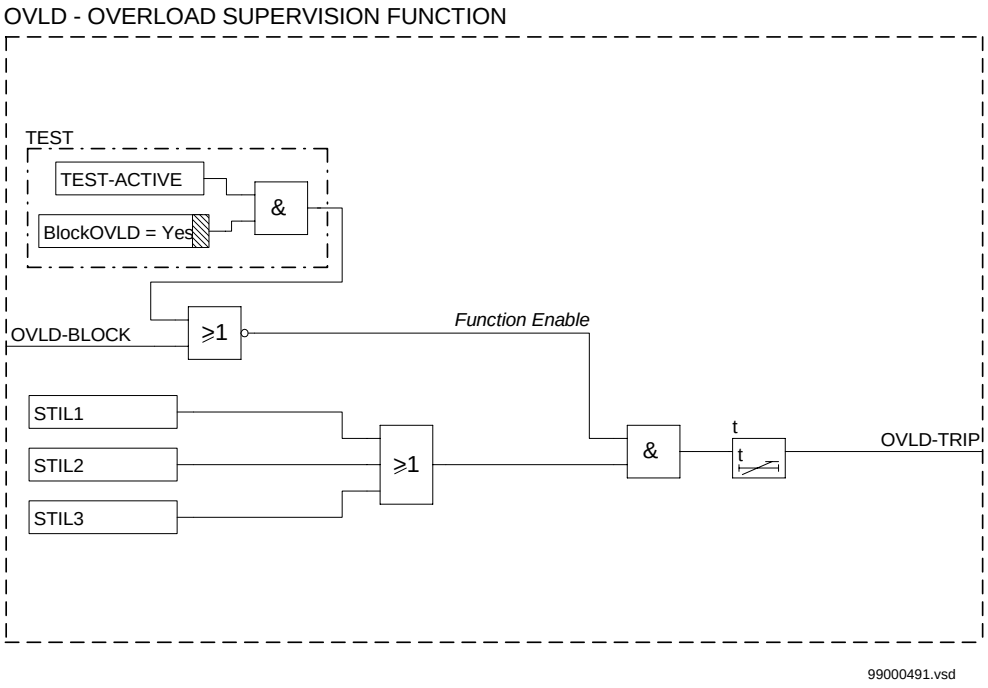


*Figure 88: Simplified logic diagram of overload supervision function*

## 3.5 Input and output signals

**Table 176: Input signals for the OVLD (OVLD-) function block**

| Signal | Description |
|---|---|
| BLOCK | Block of overload supervision function |

Path in local HMI: ServiceReport/Functions/OverLoad/FuncOutputs

**Table 177: Output signals for the OVLD (OVLD-) function block**

| Signal | Description |
|---|---|
| TRIP | Trip by overload supervision function |

## 3.6 Setting parameters

Path in local HMI: Settings/Functions/Groupn/OverLoad

**Table 178: Setting parameters for the overload supervision OVLD (OVLD-) function**

| Parameter | Range | Default | Unit | Description |
|---|---|---|---|---|
| Operation | Off, On | Off | - | Operating mode for OVLD function |
| IP> | 20-300 | 100 | % of I1b | Operating phase current |
| t | 0.0-90000.0<br>Step: 0.1 | 20.0 | s | Time delay |

## 3.7 Technical data

**Table 179: OVLD - Overload supervision function**

| Parameter | Setting range | Accuracy |
|---|---|---|
| Operate current, IP> | 20-300% of I1b in steps of 1% | ± 2.5% of $I_r$ at $I \leq I_r$<br>± 2.5% of I at $I > I_r$ |
| Time delay, t | 0.0-90000.0 s in steps of<br>0.1 s | ± 0.5% ± 10 ms |

# 4 Dead line detection (DLD)

## 4.1 Application

The main purpose of the dead line detection is to provide different protection, control and monitoring functions with the status of the line, i.e whether or not it is connected to the rest of the power system.

## 4.2 Functionality

The dead line detection function continuously measures all three phase currents and phase voltages of a protected power line. The line is declared as dead (not energized) if all three measured currents and voltages fall below the preset values for more than 200 ms.

## 4.3 Function block

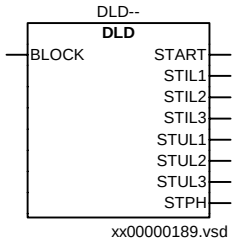

## 4.4 Logic diagram

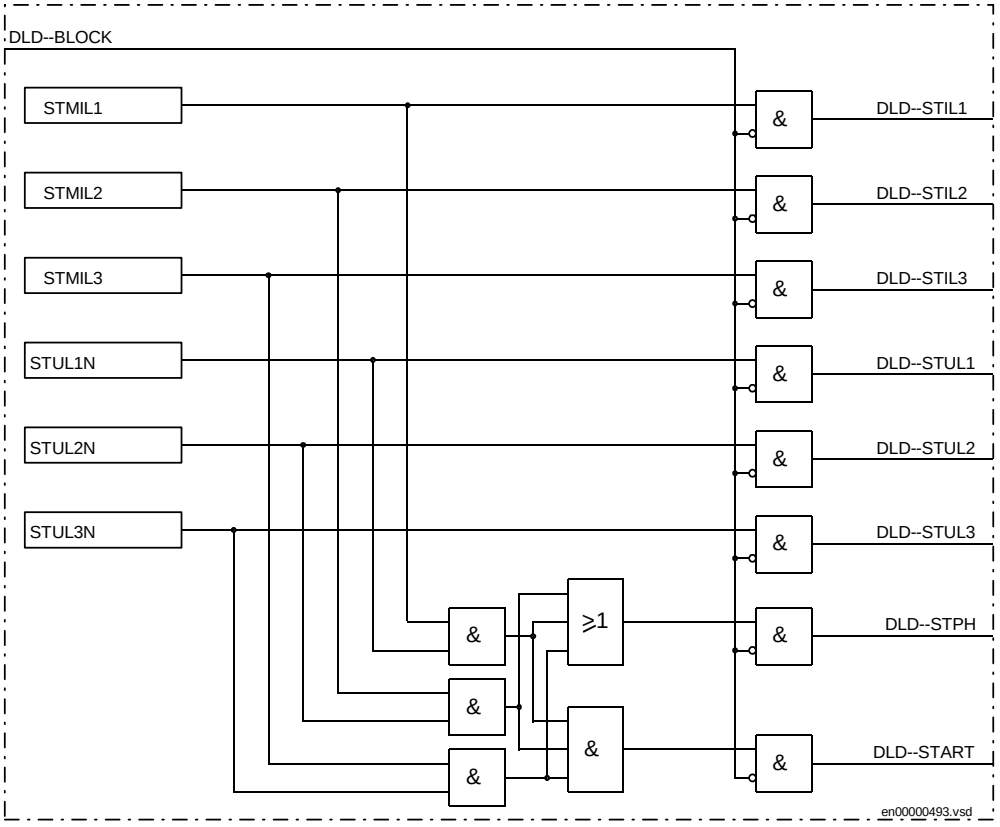


*Figure 89: DLD - simplified logic diagram of a function*

## 4.5 Input and output signals

**Table 180: Input signals for the DLD (DLD--) function block**

| Signal | Description |
|---|---|
| BLOCK | Block of dead line detection |

Path in local HMI: ServiceReport/Functions/DeadLineDet/FuncOutputs

**Table 181: Output signals for the DLD (DLD--) function block**

| Signal | Description |
|---|---|
| START | Dead line condition detected in all three phases |
| STIL1 | Current below set value phase L1 |
| STIL2 | Current below set value phase L2 |
| STIL3 | Current below set value phase L3 |
| STUL1 | Voltage below set value phase L1 |
| STUL2 | Voltage below set value phase L2 |
| STUL3 | Voltage below set value phase L3 |
| STPH | Dead phase condition detected in at least one phase |

## 4.6 Setting parameters

Path in local HMI: Settings/Functions/Groupn/DeadLineDet

**Table 182: Setting parameters for the dead line detection DLD (DLD--) function**

| Parameter | Range | Default | Unit | Description |
|---|---|---|---|---|
| Operation | Off / On | Off | - | Operating mode for DLD function |
| U< | 10 - 100<br>Step: 1 | 70 | % of U1b | Operating phase voltage (undervoltage function) |
| IP< | 5 - 100<br>Step: 1 | 20 | % of I1b | Operating phase current (undercurrent function) |

## 4.7 Technical data

**Table 183: DLD - Dead line detection**

| Function | | Setting range | Accuracy |
|---|---|---|---|
| Automatic check of dead line condition | Operate phase current, IP< | (5-100) % of I1b in steps of 1% | ± 2.5 % of $I_r$ |
| | Operate phase voltage, U< | (10-100) % of U1b in steps of 1% | ± 2.5 % of $U_r$ |

# Chapter 8 Secondary system supervision

**About this chapter**

This chapter describes the secondary system supervision functions.

# 1 Current circuit supervision, current based (CTSU)

## 1.1 Application

Faulty information about current flows in a protected element might influence the security (line differential protection) or dependability (line distance protection) of a complete protection system.

The main purpose of the current circuit supervision function is to detect different faults in the current secondary circuits and influence the operation of corresponding main protection functions.

The signal can be configured to block different protection functions or initiate an alarm.

## 1.2 Functionality

The function compares the zero sequences currents, from the protection current transformer core, with a reference zero sequence current, from another current transformer core. For example from a measuring core.

The function issues an output signal when the difference is greater than the set value.

## 1.3 Function block

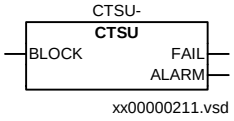

## 1.4 Logic diagram

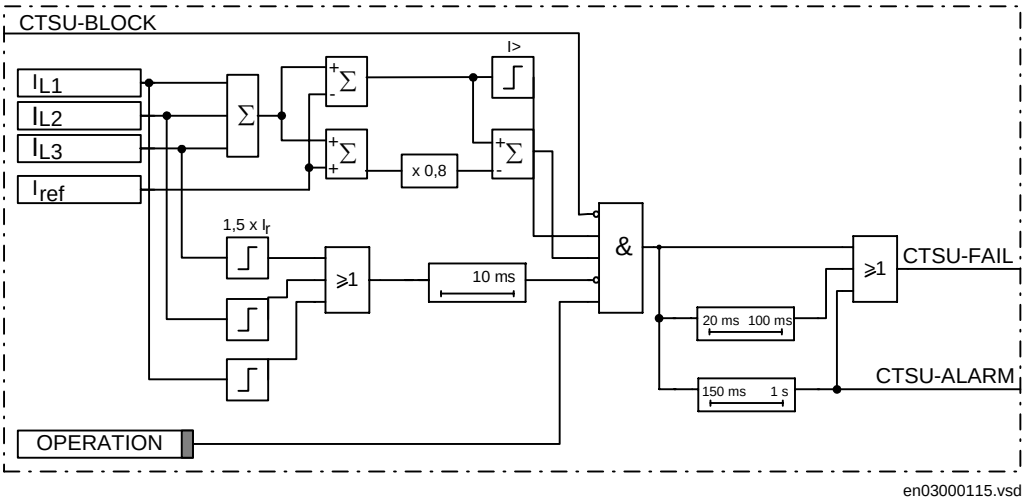


*Figure 90: Simplified logic diagram for the current circuit supervision*

## 1.5 Input and output signals

**Table 184: Input signals for the CTSU (CTSU-) function block**

| Signal | Description |
|---|---|
| BLOCK | Block function |

Path in local HMI: ServiceReport/Functions/CTSupervision/FuncOutputs

**Table 185: Output signals for the CTSU (CTSU-) function block**

| Signal | Description |
|---|---|
| FAIL | Current circuit failure |
| ALARM | Alarm for current circuit failure |

## 1.6 Setting parameters

Path in local HMI: Settings/Functions/Groupn/CTSupervision

**Table 186: Setting parameters for the current circuit supervision CTSU (CTSU-) function**

| Parameter | Range | Default | Unit | Description |
|---|---|---|---|---|
| Operation | Off, On | Off | - | Operating mode for CTSU function |
| IMinOp | 5-100<br>Step: 1 | 20 | % of I1b | Minimum operate phase current |

## 1.7 Technical data

**Table 187: CTSU - Current circuit supervision, current based**

| Function | Setting range | Accuracy |
|---|---|---|
| Operate current, IMinOp | 5-100% of I1b in steps of 1% | ± 5.0% of $I_r$ |

# 2 Fuse failure supervision (FUSE)

## 2.1 Application

The fuse failure supervision function, FUSE, continuously supervises the ac voltage circuits between the voltage instrument transformers and the terminal. Different output signals can be used to block, in case of faults in the ac voltage secondary circuits, the operation of the distance protection and other voltage-dependent functions, such as the synchro-check function, undervoltage protection, etc.

Different measurement principles are available for the fuse failure supervision function.

The FUSE function based on zero sequence measurement principle, is recommended in directly or low impedance earthed systems.

The FUSE function based on the negative sequence measurement principle is recommended in isolated or high impedance earthed systems.

A criterion based on delta current and delta voltage measurements can be added to the FUSE function in order to detect a three phase fuse failure, which in practice is more associated with voltage transformer switching during station operations.

## 2.2 Functionality

The FUSE function based on the negative sequence measurement principle continuously measures the negative sequence voltage and current in all three phases. It operates if the measured negative sequence voltage increases over the preset operating value, and if the measured negative sequence current remains below the preset operating value.

The FUSE function based on the zero sequence measurement principle continuously measures the zero sequence current and voltage in all three phases. It operates if the measured zero sequence voltage increases over preset operating value, and if the measured zero sequence current remains below the preset operating value.

The di/dt and du/dt algorithm, detects a fuse failure if a sufficient negative change in voltage amplitude without a sufficient change in current amplitude is detected in each phase separately. This check is performed if the circuit breaker is closed. Information about the circuit breaker position is brought to the function input CBCLOSED through a binary input of the terminal.

Three output signals are available. The first depends directly on the voltage and current measurement. The second depends on the operation of the dead line detection function, to prevent unwanted operation of the distance protection if the line has been deenergised and energised under fuse failure conditions. The third depends on the loss of all three measured voltages. A special function input serves the connection to the auxiliary contact of a miniature circuit breaker, MCB (if used), to secure correct operation of the function on simultaneous interruption of all three measured phase voltages also when the additional delta current and delta voltage algorithm is not present in the function block.

## 2.3 Function block

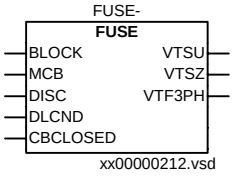


*Figure 91: Function block, FUSE function including DU/Dt based*

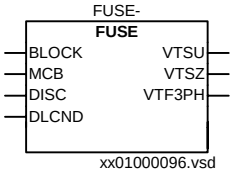


*Figure 92: Function block, negative sequence*

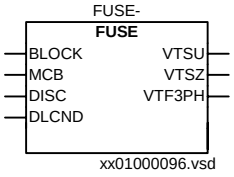


*Figure 93: Function block, zero sequence*

## 2.4 Logic diagram

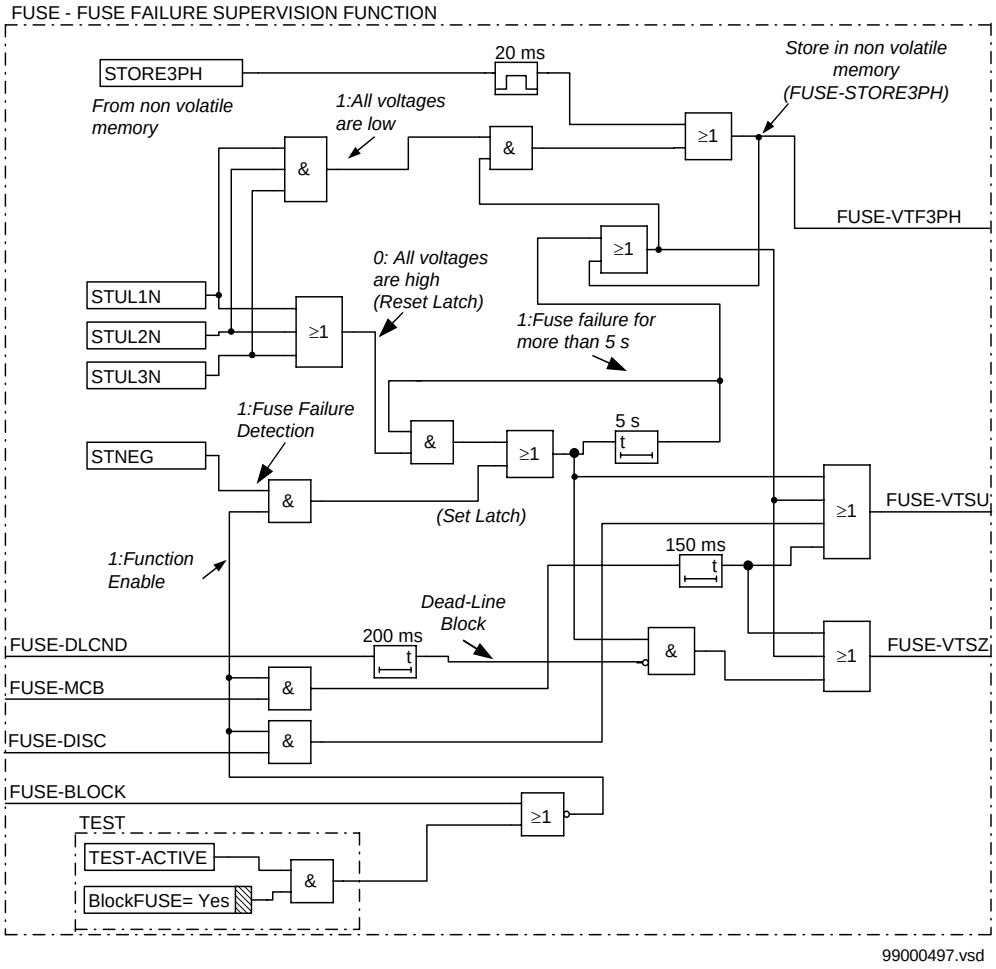


*Figure 94: Simplified logic diagram for fuse failure supervision function, negative sequence.*

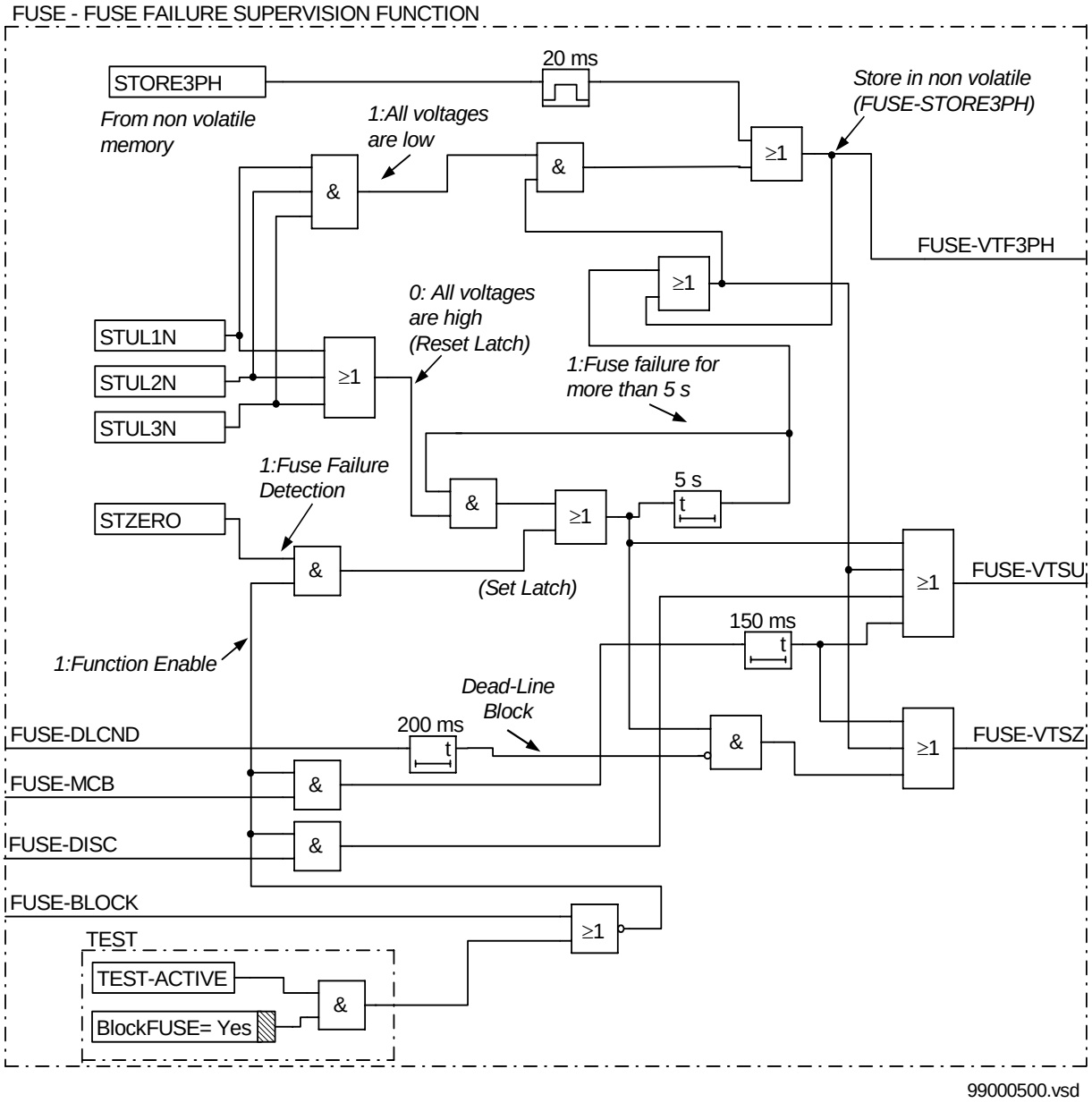


*Figure 95: Simplified logic diagram for fuse failure supervision function, zero sequence*

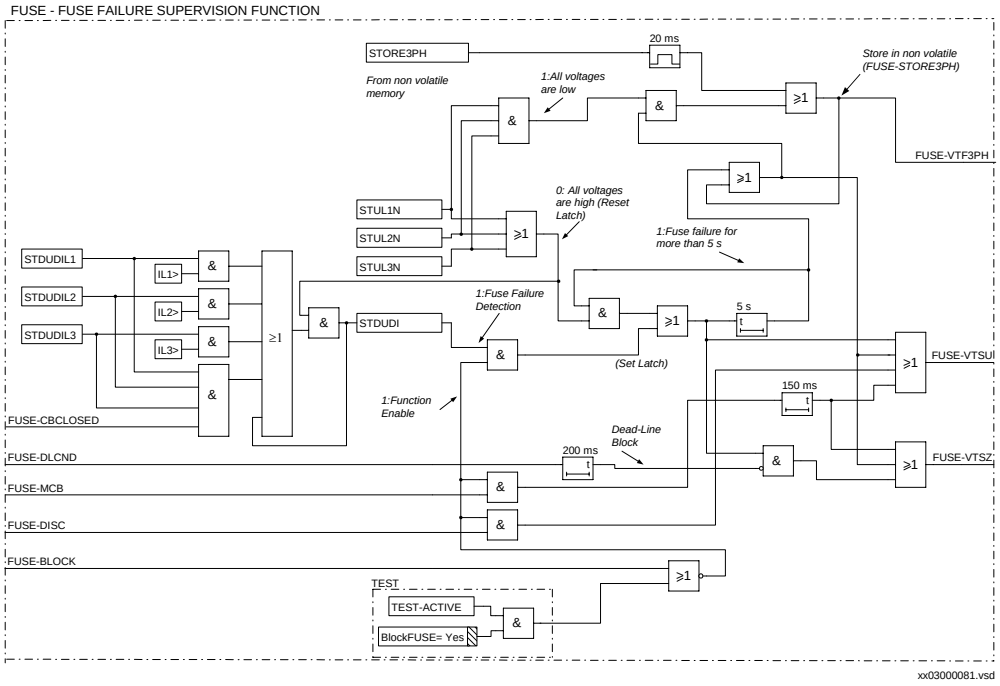


*Figure 96: Simplified logic diagram for fuse failure supervision function, du/dt based*

## 2.5 Input and output signals

**Table 188: Input signals for the FUSE (FUSE-) function block**

| Signal | Description |
|---|---|
| BLOCK | Block of fuse failure function |
| MCB | Operation of MCB |
| DISC | Line disconnector position |
| DLCND | Dead line condition |
| CBCLOSED | Circuit breaker closed information |

Path in local HMI: ServiceReport/Functions/FuseFailure/FuncOutputs

**Table 189: Output signals for the FUSE (FUSE-) function block**

| Signal | Description |
|---|---|
| VTSU | Block for voltage measuring functions |
| VTSZ | Block for impedance measuring functions |
| VTF3PH | Detection of 3-phase fuse failure |

## 2.6 Setting parameters

Path in local HMI: Settings/Functions/Groupn/FuseFailure

**Table 190: Setting parameters for the fuse failure supervision FUSE (FUSE-) function**

| Parameter | Range | Default | Unit | Description |
|---|---|---|---|---|
| ZeroSeq | Off, On | Off | - | Operating mode for FUSE function |
| 3U0> | 10-50<br>Step: 1 | 10 | % of U1b | Operating zero sequence voltage |
| 3I0< | 10-50<br>Step: 1 | 10 | % of I1b | Operating zero sequence current |

Path in local HMI-tree: Settings/Functions/Groupn/FuseFailure

**Table 191: Setting parameters for the fuse failure supervision FUSE (FUSE-) function**

| Parameter | Range | Default | Unit | Description |
|---|---|---|---|---|
| NegativeSeq | Off, On | Off | - | Operating mode for FUSE function |
| 3U2> | 10-50<br>Step: 1 | 10 | % of U1b | Operating negative sequence voltage |
| 3I2< | 10-50<br>Step: 1 | 10 | % of I1b | Operating negative sequence current |

Path in local HMI-tree: Settings/Functions/Groupn/FuseFailure

**Table 192: Setting parameters for the fuse failure supervision FUSE (FUSE-) function, du/dt, di/dt based**

| Parameter | Range | Default | Unit | Description |
|---|---|---|---|---|
| dUdI | Off, On | Off | - | Operating mode for FUSE function |
| I> | 10-50<br>Step: 1 | 10 | % of I1b | Operate phase current level |
| DU> | 50-90<br>Step: 1 | 80 | % of U1b | Operate voltage change level |
| DI< | 10-50<br>Step: 1 | 10 | % of I1b | Operate current change level |

***Note!***

*Parameter dUdI is only possible to change in the local HMI.*

## 2.7 Technical data

**Table 193: FUSEzs - Fuse failure supervision, zero sequence**

| Function | | Setting range | Accuracy |
|---|---|---|---|
| Zero-sequence quantities: | Operate voltage $3U_0>$ | (10-50)% of U1b in steps of 1% | ± 2.5 % of $U_r$ |
| | Operate current $3I_0<$ | (10-50)% of I1b in steps of 1% | ± 2.5 % of $I_r$ |

**Table 194: FUSEns - Fuse failure supervision function, negative sequence**

| Function | | Setting range | Accuracy |
|---|---|---|---|
| Negative-sequence quantities: | Operate voltage $3U_2>$ | (10 - 50)% of U1b in steps of 1% | ± 2.5 % of $U_r$ |
| | Operate current $3I_2>$ | (10 - 50)% of I1b in steps of 1% | ± 2.5 % of $I_r$ |

**Table 195: FUSEdb - Fuse failure supervision, du/dt and di/dt based**

| Function | Setting range | Accuracy |
|---|---|---|
| Operate voltage change level, DU> | (50-90)% of U1b in steps of 1% | ± 2.5% of Ur |
| Operate current change level, DI< | (10-50)% of I1b in steps of 1% | ± 2.5% of Ir |

# 3 Voltage transformer supervision (TCT)

## 3.1 Application

The main purpose of the voltage transformer supervision function is to indicate failure in the measuring voltage from a capacitive voltage transformer.

## 3.2 Functionality

The voltage transformer supervision function checks all of the three phase-phase voltages and the residual voltage. If the residual voltage exceeds the setpoint value and any of the phase-phase voltages is higher than 80% of the rated phase-phase voltage the output is activated after a set-table time delay.

## 3.3 Function block

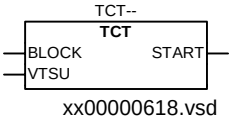


## 3.4 Logic diagram

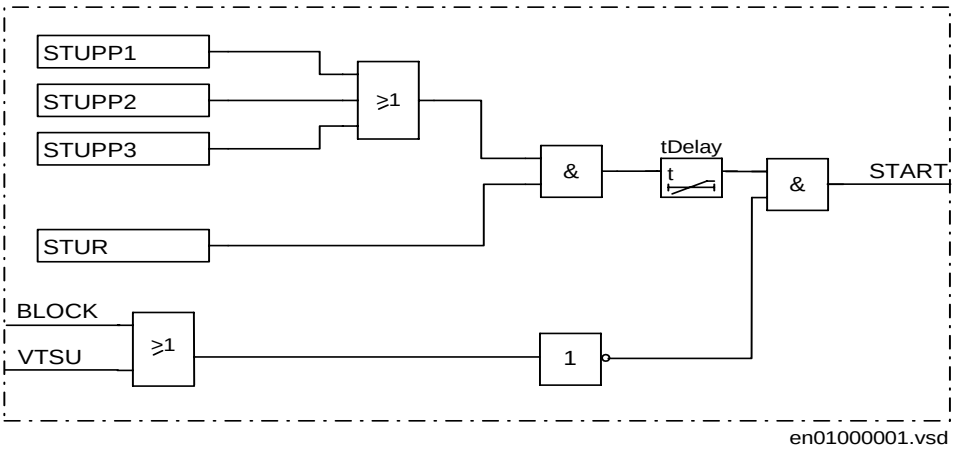


*Figure 97: Simplified logic diagram, TCT function*

## 3.5 Input and output signals

**Table 196: Input signals for the TCT (TCT--) function block**

| Signal | Description |
|---|---|
| BLOCK | Block of voltage transformer supervision |
| VTSU | Block of voltage transformer supervision from voltage circuit supervision |

Path in local HMI: ServiceReport/Functions/VoltageTransfS/FuncOutputs

**Table 197: Output signals for the TCT (TCT--) function block**

| Signal | Description |
|---|---|
| START | Start by voltage transformer supervision |

## 3.6 Setting parameters

Path in local HMI-tree: Settings/Functions/Groupn/VoltageTransfS

**Table 198: Settings for the voltage transformer supervision TCT (TCT--) function**

| Parameter | Range | Default | Unit | Description |
|---|---|---|---|---|
| Operation | On/Off | Off | - | Operating mode for TCT function |
| UN> | 1.0-80.0<br>Step: 0.1 | 10.0 | % of Ub | Residual overvoltage limit |
| tDelay | 0.000-300.000<br>Step. 0.001 | 3.000 | s | Time delayed operation for start signal |

## 3.7 Technical data

**Table 199: TCT - Voltage transformer supervision**

| Parameter | Setting range | Accuracy |
|---|---|---|
| Residual overvoltage limit, UN> | 1.0-80.0% of Ub in steps of 0.1% | ± 2.5% of $U_r$ |
| Time delayed operation for start signal, tDelay | 0.000-300.000 s in steps of 1 ms | ± 0.5% ± 10 ms |

# Chapter 9 Control

**About this chapter**

This chapter describes the control functions.

# 1 Synchrocheck and energizing check (SYN)

## 1.1 Application

The main purpose of the synchrocheck function is to provide controlled closing of circuit breakers in interconnected networks.

The main purpose of the energizing check function is to facilitate the controlled reconnection of a disconnected line or bus to, respectively, an energized bus or line.

The main purpose of the synchronizing function is to provide controlled closing of circuit breakers when two asynchronous systems are going to be connected. It is used for slip frequencies that are larger than those for synchrocheck.

The synchronizing function is only available together with the synchrocheck and energizing check functions.

To meet the different application arrangements, a number of identical SYN function blocks may be provided within a single terminal. The number of these function blocks that may be included within any given terminal depends on the type of terminal. Therefore, the specific circuit breaker arrangements that can be catered for, or the number of bays of a specific arrangement that can be catered for, depends on the type of terminal.

## 1.2 Functionality

The synchrocheck function measures the conditions across the circuit breaker and compares them to set limits. The output is only given when all measured conditions are simultaneously within their set limits.

The energizing check function measures the bus and line voltages and compares them to both high and low threshold detectors. The output is only given when the actual measured conditions match the set conditions.

The synchronizing measures the conditions across the circuit breaker, and also determines the angle change during the closing delay of the circuit breaker from the measured slip frequency. The output is only given when all measured conditions are simultaneously within their set limits. The issue of the output is timed to give closure at the optimal time.

### 1.2.1 Single breaker

For single circuit breaker arrangements, the SYN function blocks have the capability to make the necessary voltage selection. For single circuit breaker arrangements, selection of the correct voltage is made using auxiliary contacts of the bus disconnection.

## 1.3 Function block

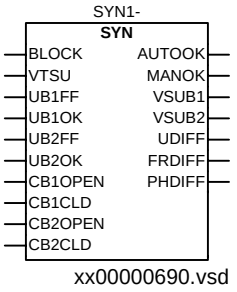


*Figure 98: Function block for single CB*

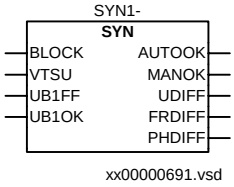


*Figure 99: Function block for double CB*

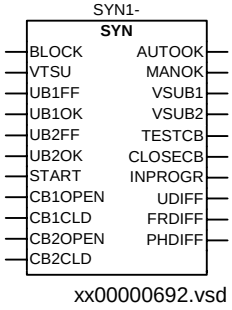


*Figure 100: Function block for single CB with phasing*

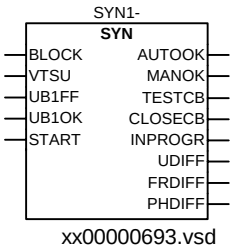


*Figure 101: Function block for double CB with phasing*

## 1.4 Logic diagram

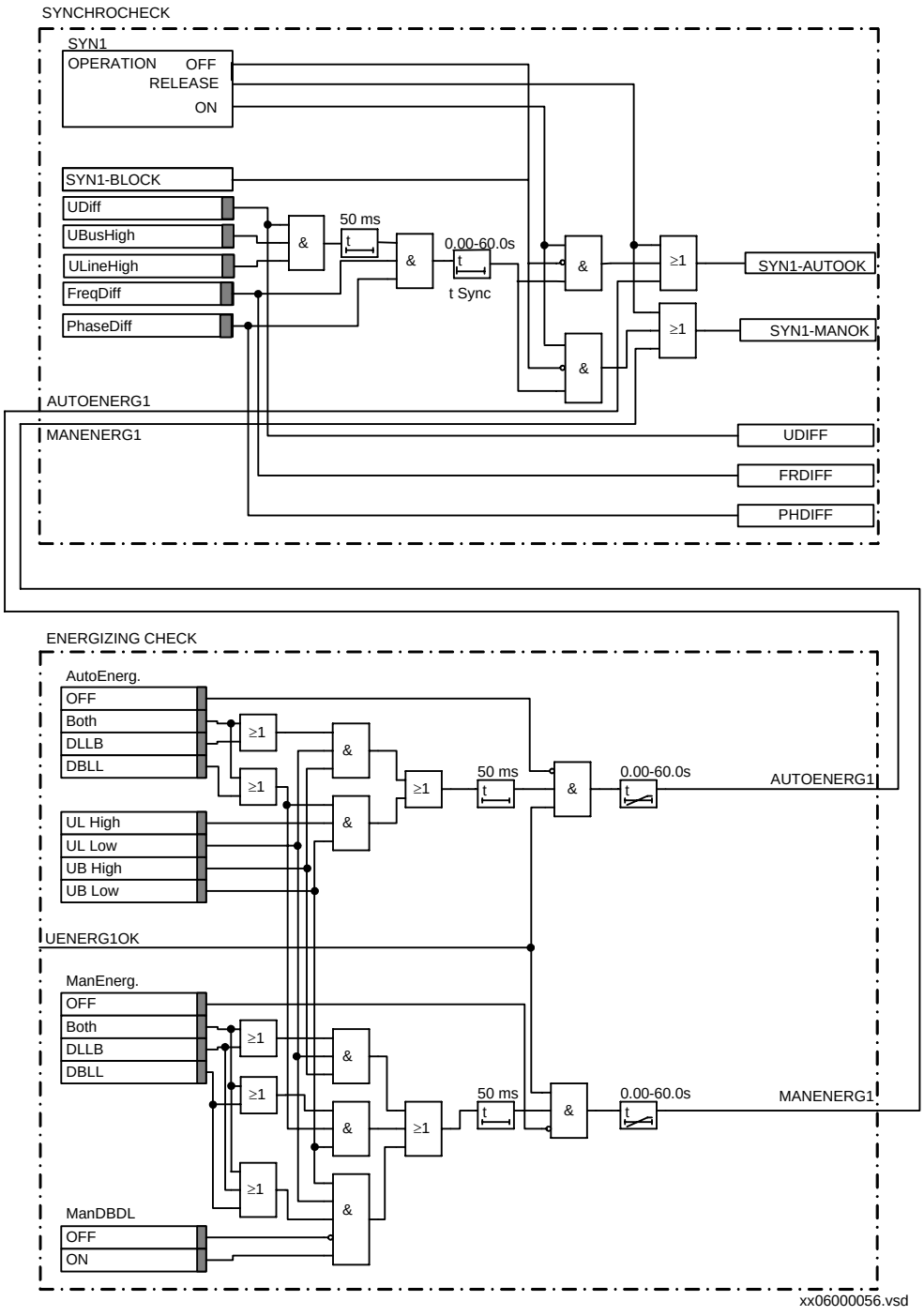


*Figure 102: Simplified logic diagram, synchrocheck and energizing check, The internal signal*

*UENERG1OK refers to the voltage selection logic.*

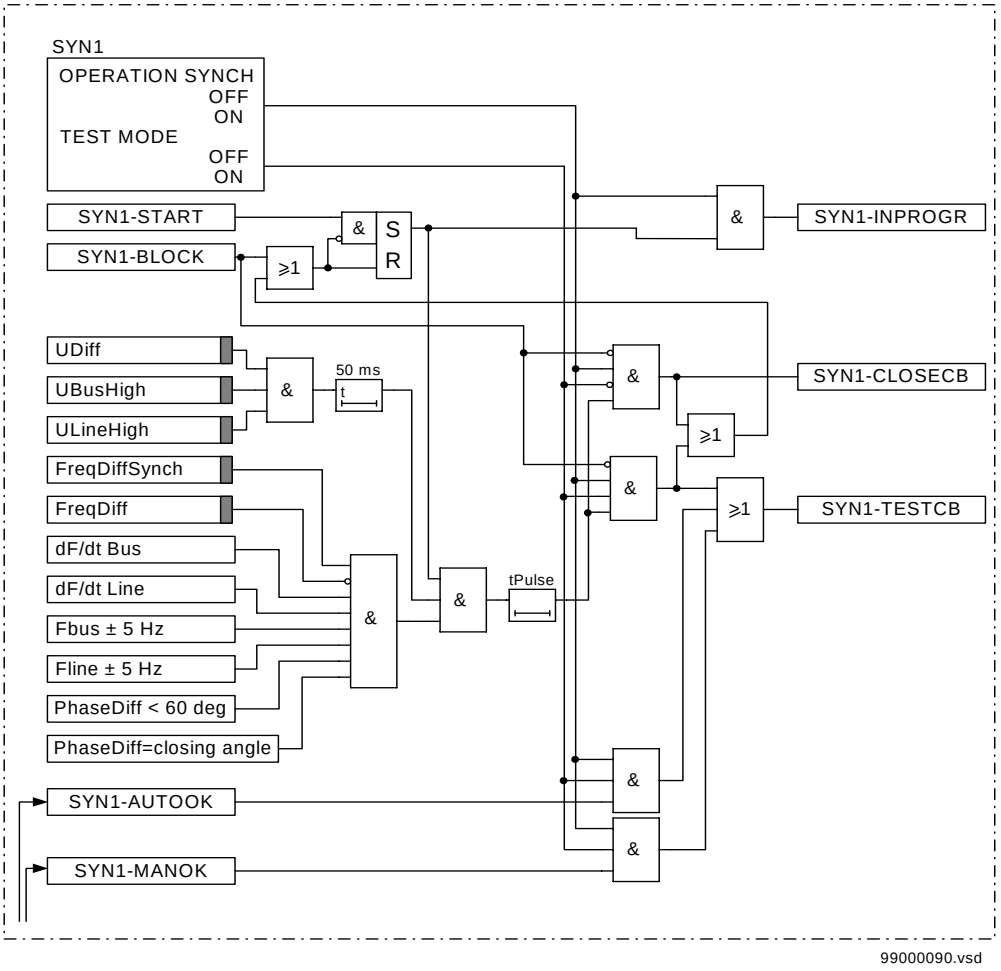


*Figure 103: SYN, phasing, simplified logic diagram. The input signals SYN1-AUTOOK and SYN1-MANOK derive from the synchrocheck and energizing logic*

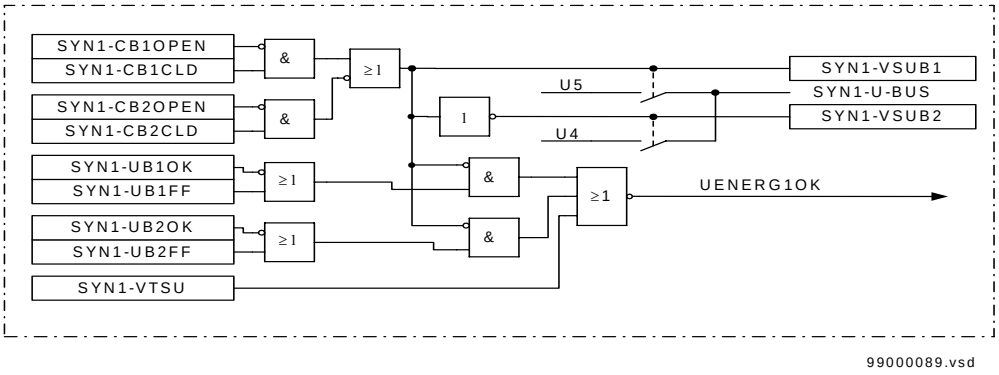


*Figure 104: SYN, simplified voltage selection logic in a double bus, single breaker arrangement*

## 1.5 Input and output signals

**Table 200: Input signals for the SYN (SYN--) function block for single circuit breaker**

| Signal | Description |
|---|---|
| BLOCK | Blocks function |
| VTSU | Fuse failure supervision, line voltage |
| UB1FF | Fuse failure, bus 1 |
| UB1OK | Fuse healthy, bus 1 |
| UB2FF | Fuse failure, bus 2 |
| UB2OK | Fuse healthy, bus 2 |
| CB1OPEN | Circuit breaker section 1 open |
| CB1CLD | Circuit breaker section 1 closed |
| CB2OPEN | Circuit breaker section 2 open |
| CB2CLD | Circuit breaker section 2 closed |

Path in local HMI: ServiceReport/Functions/SynchroCheckn/FuncOutputs

**Table 201: Output signals for the SYN (SYN--) function block for single circuit breaker**

| Signal | Description |
|---|---|
| AUTOOK | Synchrocheck / energizing check OK for automatic reclosing |
| MANOK | Synchrocheck / energizing check OK for manual closing |

| Signal | Description |
|---|---|
| VSUB1 | Voltage selection from bus 1 |
| VSUB2 | Voltage selection from bus 2 |
| UDIFF | Difference in voltage is less than the set difference limit |
| FRDIFF | Difference in frequency is less than the set difference limit |
| PHDIFF | Difference in phase angle is less than the set difference limit |

**Table 202: Input signals for the SYN (SYN--) function block for double circuit breakers**

| Signal | Description |
|---|---|
| BLOCK | Blocks function |
| VTSU | Fuse failure supervision, line voltage |
| UB1FF | Fuse failure, bus 1 |
| UB1OK | Fuse healthy, bus 1 |

Path in local HMI: ServiceReport/Functions/SynchroCheckn/FuncOutputs

**Table 203: Output signals for the SYN (SYN--) function block for double circuit breakers**

| Signal | Description |
|---|---|
| AUTOOK | Synchrocheck / energizing check OK for automatic reclosing |
| MANOK | Synchrocheck / energizing check OK for manual closing |
| UDIFF | Difference in voltage is less than the set difference limit |
| FRDIFF | Difference in frequency is less than the set difference limit |
| PHDIFF | Difference in phase angle is less than the set difference limit |

**Table 204: Input signals for the SYN (SYN--) function block for single circuit breaker with phasing**

| Signal | Description |
|---|---|
| BLOCK | Blocks function |
| VTSU | Fuse failure supervision, line voltage |
| UB1FF | Fuse failure, bus 1 |
| UB1OK | Fuse healthy, bus 1 |
| UB2FF | Fuse failure, bus 2 |
| UB2OK | Fuse healthy, bus 2 |
| START | Start phasing function |
| CB1OPEN | Circuit breaker section 1 open |
| CB1CLD | Circuit breaker section 1 closed |
| CB2OPEN | Circuit breaker section 2 open |
| CB2CLD | Circuit breaker section 2 closed |

Path in local HMI: ServiceReport/Functions/SynchroCheckn/FuncOutputs

**Table 205: Output signals for the SYN (SYN--) function block for single circuit breaker with phasing**

| Signal | Description |
|---|---|
| AUTOOK | Synchrocheck / energizing check OK for automatic reclosing |
| MANOK | Synchrocheck / energizing check OK for manual closing |
| VSUB1 | Voltage selection from bus 1 |
| VSUB2 | Voltage selection from bus 2 |
| TESTCB | Circuit breaker close output in test mode |
| CLOSECB | Circuit breaker close output |
| INPROGR | Phasing operation in progress |
| UDIFF | Difference in voltage is less than the set difference limit |
| FRDIFF | Difference in frequency is less than the set difference limit |
| PHDIFF | Difference in phase angle is less than the set difference limit |

**Table 206: Input signals for the SYN (SYN--) function block for double circuit breaker with phasing**

| Signal | Description |
|---|---|
| BLOCK | Blocks function |
| VTSU | Fuse failure supervision, line voltage |
| UB1FF | Fuse failure, bus 1 |
| UB1OK | Fuse healthy, bus 1 |
| START | Start phasing function |

Path in local HMI: ServiceReport/Functions/SynchroCheckn/FuncOutputs

**Table 207: Output signals for the SYN (SYN--) function block for double circuit breaker with phasing**

| Signal | Description |
|---|---|
| AUTOOK | Synchrocheck / energizing check OK for automatic reclosing |
| MANOK | Synchrocheck / energizing check OK for manual closing |
| TESTCB | Circuit breaker close output in test mode |
| CLOSECB | Circuit breaker close output |
| INPROGR | Phasing operation in progress |
| UDIFF | Difference in voltage is less than the set difference limit |
| FRDIFF | Difference in frequency is less than the set difference limit |
| PHDIFF | Difference in phase angle is less than the set difference limit |

## 1.6 Setting parameters

Path in local HMI: Settings/Functions/Groupn/SynchroCheck 1-4

**Table 208: Setting parameters for the SYN (SYN--) function block for single circuit breaker**

| Parameter | Range | Default | Unit | Description |
|---|---|---|---|---|
| Operation | Off, Release, On | Off | - | Operating mode for SYN function |
| InputPhase | L1, L2, L3, L1-L2, L2-L3, L3-L1 | L1 | - | Selected input voltage |
| UMeasure | Ph/N, Ph/Ph | Ph/N | - | Selected input voltage Ph/N or Ph/Ph |
| PhaseShift | 0-360<br>Step: 1 | 0 | degrees | Phase shift between U-bus and U-line |
| URatio | 0.20-5.00<br>Step: 0.01 | 1.00 | - | Voltage ratio between U-bus and U-line |
| USelection | SingleBus, DbleBus | SingleBus | - | Bus arrangement for voltage selection |
| AutoEnerg | Off, DLLB, DBLL, Both | Off | - | Permitted energizing conditions for automatic reclosing |
| ManEnerg | Off, DLLB, DBLL, Both | Off | - | Permitted energizing conditions for manual closing |
| ManDBDL | Off, On | Off | - | Select On/Off for manual closing |
| UHigh | 50-120<br>Step: 1 | 80 | % of Ub | High voltage limit |
| ULow | 10-100<br>Step: 1 | 40 | % of Ub | Low voltage limit |
| FreqDiff | 0.05-0.30<br>Step: 0.01 | 0.20 | Hz | Frequency difference limit |
| PhaseDiff | 5-75<br>Step: 1 | 20 | degrees | Phase difference limit |
| UDiff | 5-50<br>Step: 1 | 20 | % of Ub | Voltage difference limit |
| tAutoEnerg | 0.000-60.000<br>Step: 0.001 | 0.100 | s | Time delay from fulfillment of all conditions to issue of energizing release signal for automatic reclosing |
| tManEnerg | 0.000-60.000<br>Step: 0.001 | 0.100 | s | Time delay from fulfillment of all conditions to issue of energizing release signal for manual closing |
| VTConnection | Line, Bus | Line | - | Voltage transformer connection side for the three-phase voltage |
| tSync | 0.000-60.000<br>Step: 0.001 | 0 | s | Synchrocheck operation delay time |

Path in local HMI: Settings/Functions/Groupn/SynchroCheckn

**Table 209: Setting parameters for the SYN (SYN--) function block for double circuit breakers**

| Parameter | Range | Default | Unit | Description |
|---|---|---|---|---|
| Operation | Off, Release, On | Off | - | Operating mode for SYN function |
| InputPhase | L1, L2, L3, L1-L2, L2-L3, L3-L1 | L1 | - | Selected input voltage |
| UMeasure | Ph/N, Ph/Ph | Ph/N | - | Selected input voltage Ph/N or Ph/Ph |
| PhaseShift | 0-360<br>Step: 1 | 0 | degrees | Phase shift between U-bus and U-line |
| URatio | 0.20-5.00<br>Step: 0.01 | 1.00 | - | Voltage ratio between U-bus and U-line |
| AutoEnerg | Off, DLLB, DBLL, Both | Off | - | Permitted energizing conditions for automatic reclosing |
| ManEnerg | Off, DLLB, DBLL, Both | Off | - | Permitted energizing conditions for manual closing |
| ManDBDL | Off, On | Off | - | Select On/Off for manual closing |
| UHigh | 50-120<br>Step: 1 | 80 | % of Ub | High voltage limit |
| ULow | 10-100<br>Step: 1 | 40 | % of Ub | Low voltage limit |
| FreqDiff | 0.05-0.30<br>Step: 0.01 | 0.20 | Hz | Frequency difference limit |
| PhaseDiff | 5-75<br>Step: 1 | 20 | degrees | Phase difference limit |
| tSync | 0.000-60.000<br>Step: 0.001 | 0 | s | Synchrocheck operation delay time |
| UDiff | 5-50<br>Step: 1 | 20 | % of Ub | Voltage difference limit |
| tAutoEnerg | 0.000-60.000<br>Step: 0.001 | 0.100 | s | Time delay from fulfillment of all conditions to issue of energizing release signal for automatic reclosing |
| tManEnerg | 0.000-60.000<br>Step: 0.001 | 0.100 | s | Time delay from fulfillment of all conditions to issue of energizing release signal for manual closing |
| VTConnection | Line, Bus | Line | - | Voltage transformer connection side for the three-phase voltage |

Path in local HMI-tree: Settings/Functions/Groupn/SynchroCheckn

**Table 210: Setting parameters for the SYN (SYN--) function block for single circuit breaker with phasing**

| Parameter | Range | Default | Unit | Description |
|---|---|---|---|---|
| Operation | Off, Release, On | Off | - | Operating mode for SYN function |
| InputPhase | L1, L2, L3, L1-L2, L2-L3, L3-L1 | L1 | - | Selected input voltage |
| PhaseShift | 0-360<br>Step: 1 | 0 | degrees | Phase shift between U-bus and U-line |
| URatio | 0.20-5.00<br>Step: 0.01 | 1.00 | - | Voltage ratio between U-bus and U-line |
| USelection | SingleBus, DbleBus | SingleBus | - | Bus arrangement for voltage selection |
| AutoEnerg | Off, DLLB, DBLL, Both | Off | - | Permitted energizing conditions for automatic reclosing |
| ManEnerg | Off, DLLB, DBLL, Both | Off | - | Permitted energizing conditions for manual closing |
| ManDBDL | Off, On | Off | - | Select On/Off for manual closing |
| UHigh | 50-120<br>Step: 1 | 80 | % of Ub | High voltage limit |
| ULow | 10-100<br>Step: 1 | 40 | % of Ub | Low voltage limit |
| FreqDiff | 0.05-0.30<br>Step: 0.01 | 0.20 | Hz | Frequency difference limit |
| PhaseDiff | 5-75<br>Step: 1 | 20 | degrees | Phase difference limit |
| UDiff | 5-50<br>Step: 1 | 20 | % of Ub | Voltage difference limit |
| tAutoEnerg | 0.000-60.000<br>Step: 0.001 | 0.100 | s | Time delay from fulfillment of all conditions to issue of energizing release signal for automatic reclosing |
| tManEnerg | 0.000-60.000<br>Step: 0.001 | 0.100 | s | Time delay from fulfillment of all conditions to issue of energizing release signal for manual closing |
| OperationSynch | Off, On | Off | - | Phasing function Off/On |
| ShortPulse | Off, On | Off | - | Short pulse Off/On |
| FreqDiffSynch | 0.05-0.50<br>Step: 0.01 | 0.30 | Hz | Frequency difference limit for phasing |

| Parameter | Range | Default | Unit | Description |
|---|---|---|---|---|
| tPulse | 0.000-60.000<br>Step: 0.001 | 0.200 | s | Breaker closing pulse duration |
| tBreaker | 0.02-0.50<br>Step: 0.01 | 0.20 | s | Closing time of the breaker |
| VTConnection | Line, Bus | Line | - | Voltage transformer connection side for the three-phase voltage |
| tSync | 0.000-60.000<br>Step: 0.001 | 0 | s | Synchrocheck operation delay time |
| FreqDiffBlock | Off, On | Off | - | On enables the phasing function even if the frequency difference is lower than set value of FreqDiff |

Path in local HMI-tree: Settings/Functions/Groupn/SynchroCheckn

**Table 211: Setting parameters for the SYN (SYN--) function block for double circuit breaker with phasing**

| Parameter | Range | Default | Unit | Description |
|---|---|---|---|---|
| Operation | Off, Release, On | Off | - | Operating mode for SYN function |
| InputPhase | L1, L2, L3, L1-L2, L2-L3, L3-L1 | L1 | - | Selected input voltage |
| PhaseShift | 0-360<br>Step: 1 | 0 | degrees | Phase shift between U-bus and U-line |
| URatio | 0.20-5.00<br>Step: 0.01 | 1.00 | - | Voltage ratio between U-bus and U-line |
| AutoEnerg | Off, DLLB, DBLL, Both | Off | - | Permitted energizing conditions for automatic reclosing |
| ManEnerg | Off, DLLB, DBLL, Both | Off | - | Permitted energizing conditions for manual closing |
| ManDBDL | Off, On | Off | - | Select On/Off for manual closing |
| UHigh | 50-120<br>Step: 1 | 80 | % of Ub | High voltage limit |
| ULow | 10-100<br>Step: 1 | 40 | % of Ub | Low voltage limit |
| FreqDiff | 0.05-0.30<br>Step: 0.01 | 0.20 | Hz | Frequency difference limit |
| PhaseDiff | 5-75<br>Step: 1 | 20 | degrees | Phase difference limit |
| UDiff | 5-50<br>Step: 1 | 20 | % of Ub | Voltage difference limit |
| tAutoEnerg | 0.000-60.000<br>Step: 0.001 | 0.100 | s | Time delay from fulfillment of all conditions to issue of energizing release signal for automatic reclosing |

| Parameter | Range | Default | Unit | Description |
|---|---|---|---|---|
| tManEnerg | 0.000-60.000<br>Step: 0.001 | 0.100 | s | Time delay from fulfillment of all conditions to issue of energizing release signal for manual closing |
| OperationSynch | Off, On | Off | - | Phasing function Off/On |
| ShortPulse | Off, On | Off | - | Short pulse Off/On |
| FreqDiffSynch | 0.05-0.50<br>Step: 0.01 | 0.30 | Hz | Frequency difference limit for phasing |
| tPulse | 0.000-60.000<br>Step: 0.001 | 0.200 | s | Breaker closing pulse duration |
| tBreaker | 0.02-0.50<br>Step: 0.01 | 0.20 | s | Closing time of the breaker |
| tSync | 0.000-60.000<br>Step: 0.001 | 0 | s | Synchrocheck operation delay time |
| FreqDiffBlock | Off, On | Off | - | On enables the phasing function even if the frequency difference is lower than set value of FreqDiff |

## 1.7 Technical data

**Table 212: SYN - Synchrocheck and energizing check**

| Function | Setting range | Accuracy |
|---|---|---|
| Synchrocheck: | | |
| Frequency difference limit, FreqDiff | 50-300 mHz in steps of 10 mHz | ≤20 mHz |
| Voltage difference limit, UDiff | 5-50% of U1b in steps of 1% | ± 2.5% of $U_r$ |
| Phase difference limit, PhaseDiff | 5-75 degrees in steps of 1 degree | ± 2 degrees |
| Energizing check: | | |
| Voltage level high, UHigh | 70-100% of U1b in steps of 1% | ± 2.5% of $U_r$ |
| Voltage level low, ULow | 10-80% of U1b in steps of 1% | ± 2.5% of $U_r$ |
| Energizing period, automatic reclosing, tAutoEnerg | 0.000-60.000 s in steps of 1 ms | ± 0.5% ± 10 ms |
| Energizing period, manual closing, tManEnerg | 0.000-60.000 s in steps of 1 ms | ± 0.5% ± 10 ms |
| Phase shift $\varphi_{line}$ - $\varphi_{bus}$ | 0-360 degrees in steps of 1 degree | |
| Voltage ratio $U_{bus}/U_{line}$ | 0.20-5.00 in steps of 0.01 | |

**Table 213: Synchrocheck and energizing check, general**

| Parameter | Value |
|---|---|
| Synchrocheck: | |
| Bus voltage frequency range limit | ± 5 Hz from $f_r$ |
| Operate time | 190 ms typically |
| Energizing check: | |
| Operate time | 80 ms typically |

**Table 214: SYN - Synchro-check with synchronizing and energizing-check**

| Parameter | Setting range | Accuracy |
|---|---|---|
| Frequency difference limit, FreqDiff-Synch | 50-500 mHz in steps of 10 mHz | ≤20 mHz |
| Breaker closing pulse duration, tPulse | 0.000-60.000 s in steps of 1 ms | ± 0.5% ± 10 ms |
| Breaker closing time, tBreaker | 0.02-0.50 s in steps of 0.01 s | ± 0.5% ± 10 ms |

| Parameter | Value |
|---|---|
| Bus / line voltage frequency range limit | ± 5 Hz from $f_r$ |
| Bus / line voltage frequency rate of change limit | <0.21 Hz/s |

# 2 Autorecloser (AR)

## 2.1 Application

The majority of power line faults are transient in nature, i.e. they do not recur when the line is re-energized following disconnection. The main purpose of the AR automatic reclosing function is to automatically return power lines to service following their disconnection for fault conditions.

To meet the different single, double or 1 and 1/2 circuit breaker arrangements, one, two, three, or six identical AR function blocks may be provided within a single terminal. The actual number of these function blocks that may be included within any given terminal depends on the type of terminal. Therefore, the specific circuit breaker arrangements that can be catered for, or the number of bays of a specific arrangement that can be catered for, depends on the type of terminal.

Especially at higher voltages, the majority of line faults are single-phase-to-earth. Faults involving all three phases are rare. The main purpose of the single- and two-pole automatic reclosing function, operating in conjunction with a single- and two-pole tripping capability, is to limit the effect to the system of faults involving less than all three phases. This is particularly valuable for maintaining system stability in systems with limited meshing or parallel routing.

## 2.2 Functionality

The AR function is a logical function built up from logical elements. It operates in conjunction with the trip output signals from the line protection functions, the OK to close output signals from the synchrocheck and energizing check function, and binary input signals. The binary input signals can be for circuit breaker position/status or from other external protection functions.

The AR function has a priority selection capability that enables reclosing coordination for double and 1 and 1/2 circuit breaker arrangements. Reclosing of the circuit breakers will take place sequentially. No reclosing of the second circuit breaker will occur if reclosure of the first was unsuccessful due to reclosure on to a persistent fault.

Of the six reclosing programs, one provides for three-pole reclosing only, while the others provide for single- and two-pole reclosing as well. For the latter, only the first shot may be single- or two-pole. All subsequent shots up to the maximum number will be three-pole. For some of the programs, depending on the initial trip, no shot, or only one shot, will be permitted irrespective of the number of shots selected.

## 2.3 Function block

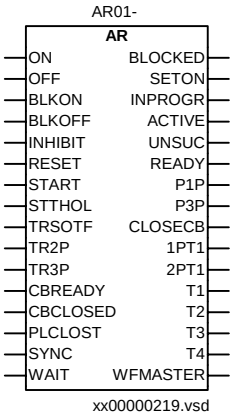


*Figure 105: AR Function block: Single, two and/or three phase*

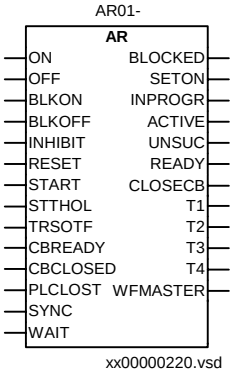


*Figure 106: AR Function block: Three phase*

## 2.4 Logic diagram

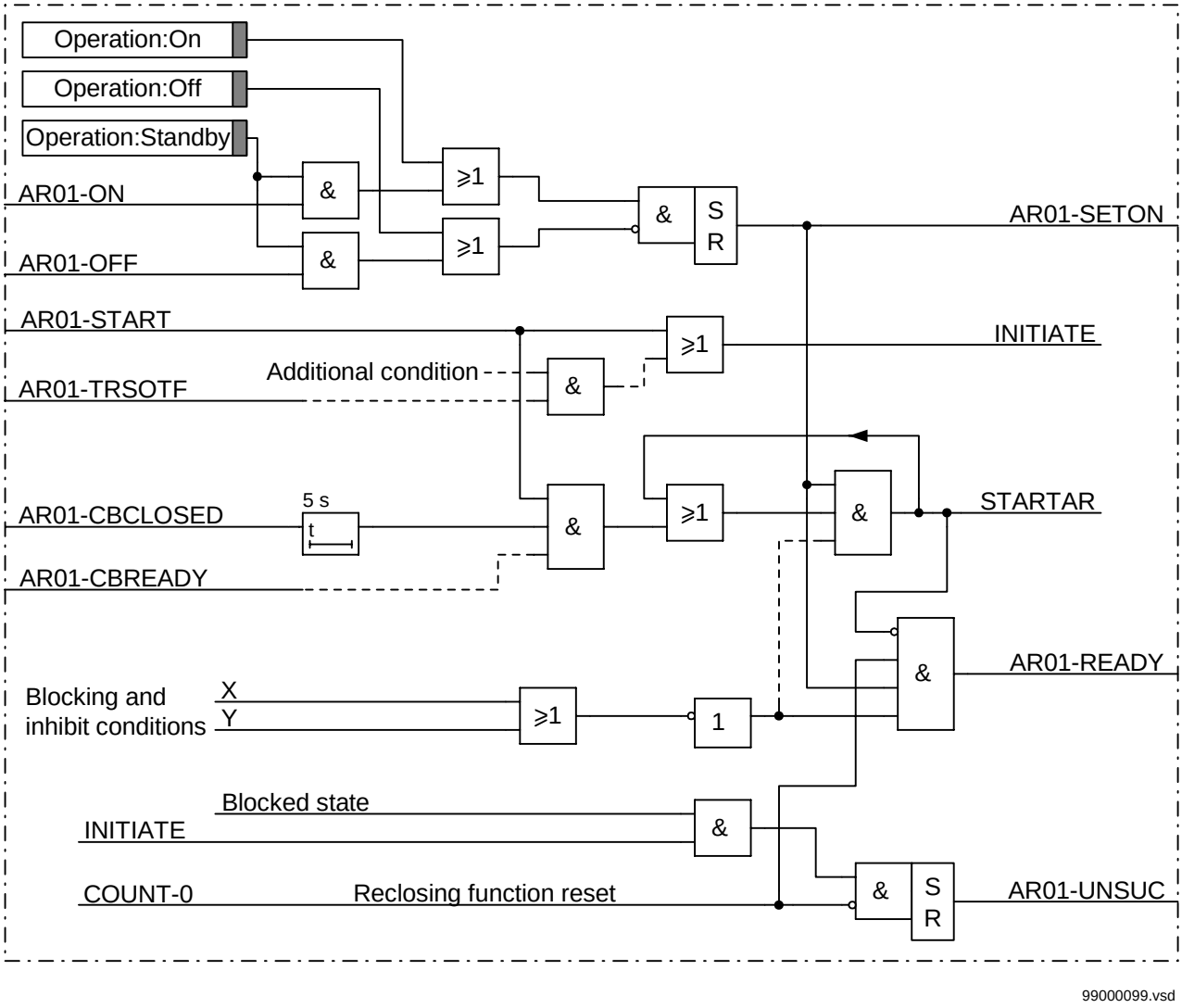


*Figure 107: Auto-reclosing on/off control and start*

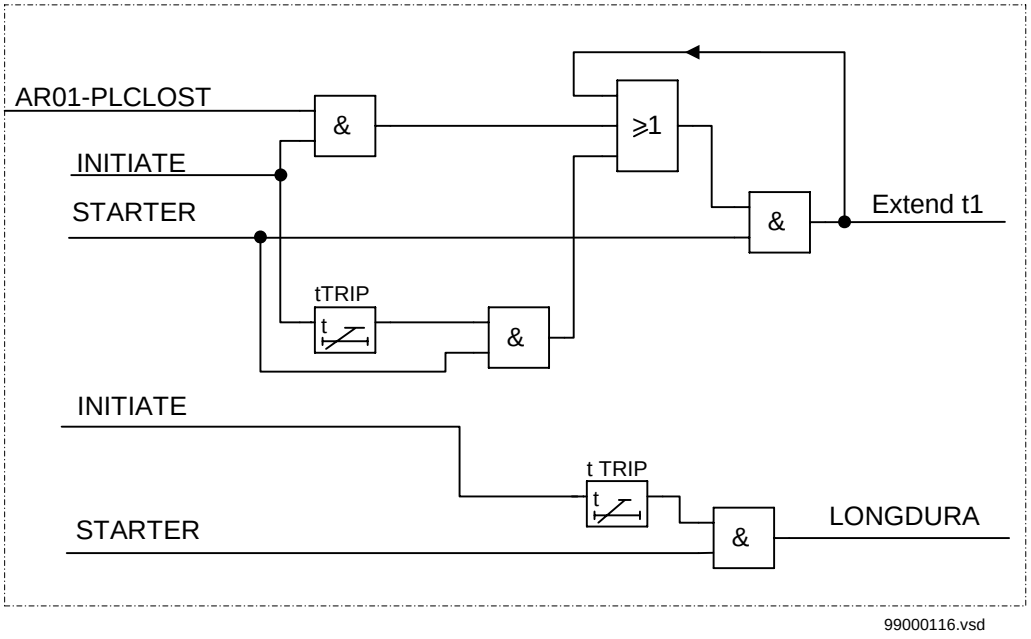


*Figure 108: Control of extended AR open time, shot 1*

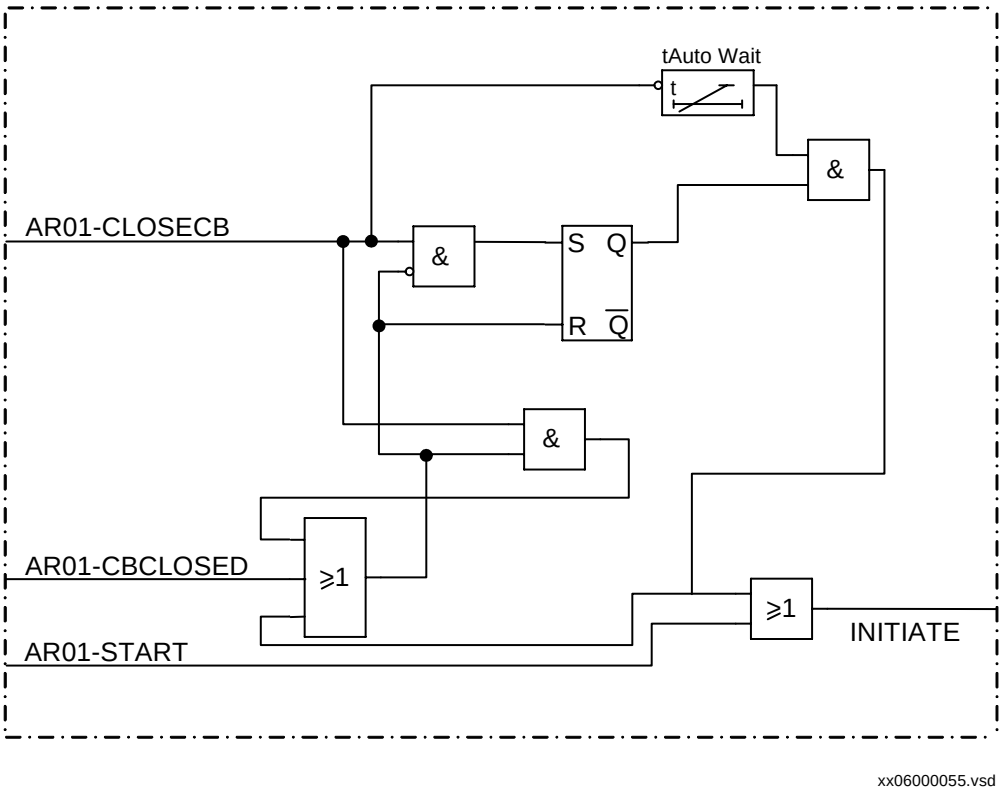


*Figure 109: Automatic proceeding of shot 2 to 4*

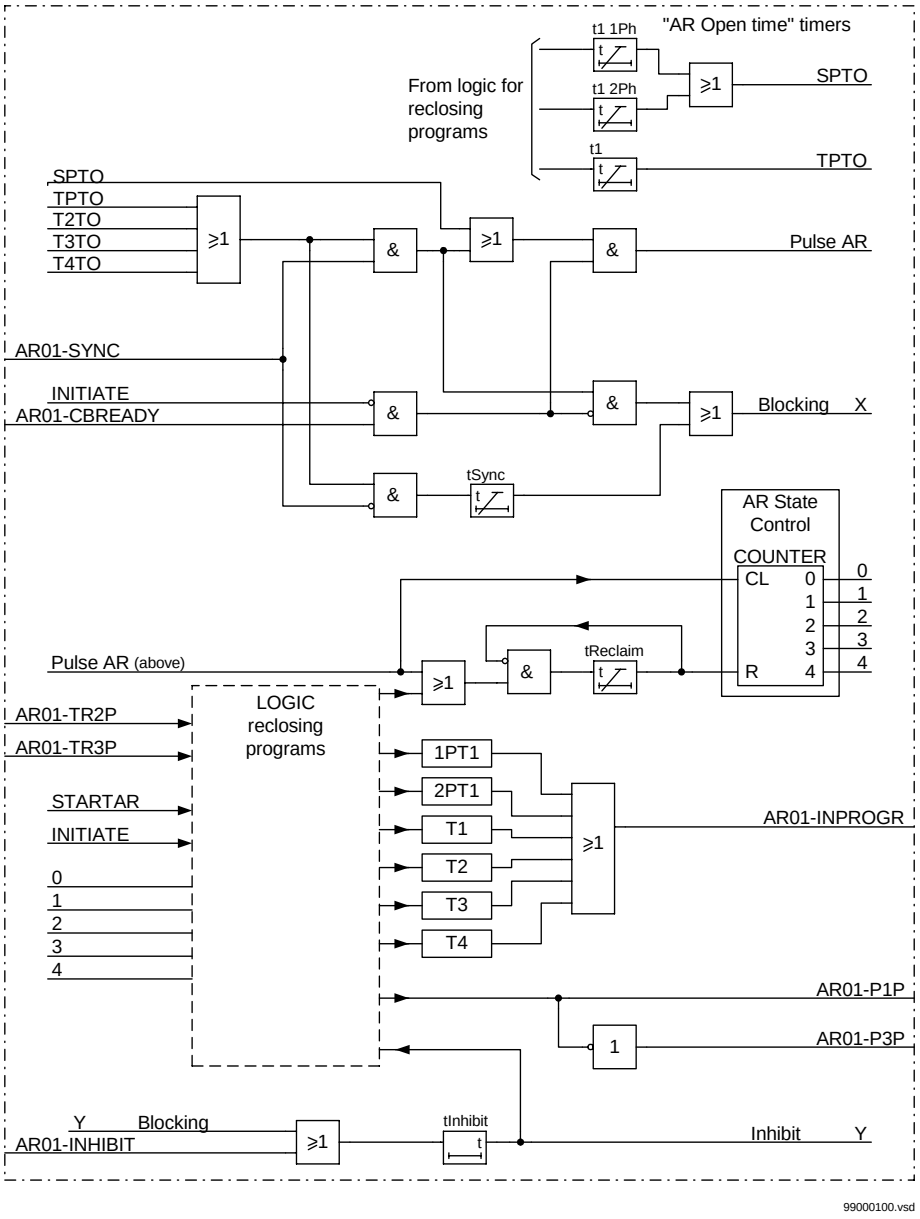


*Figure 110: Reclosing checks and "Reclaim" and "Inhibit" timers*

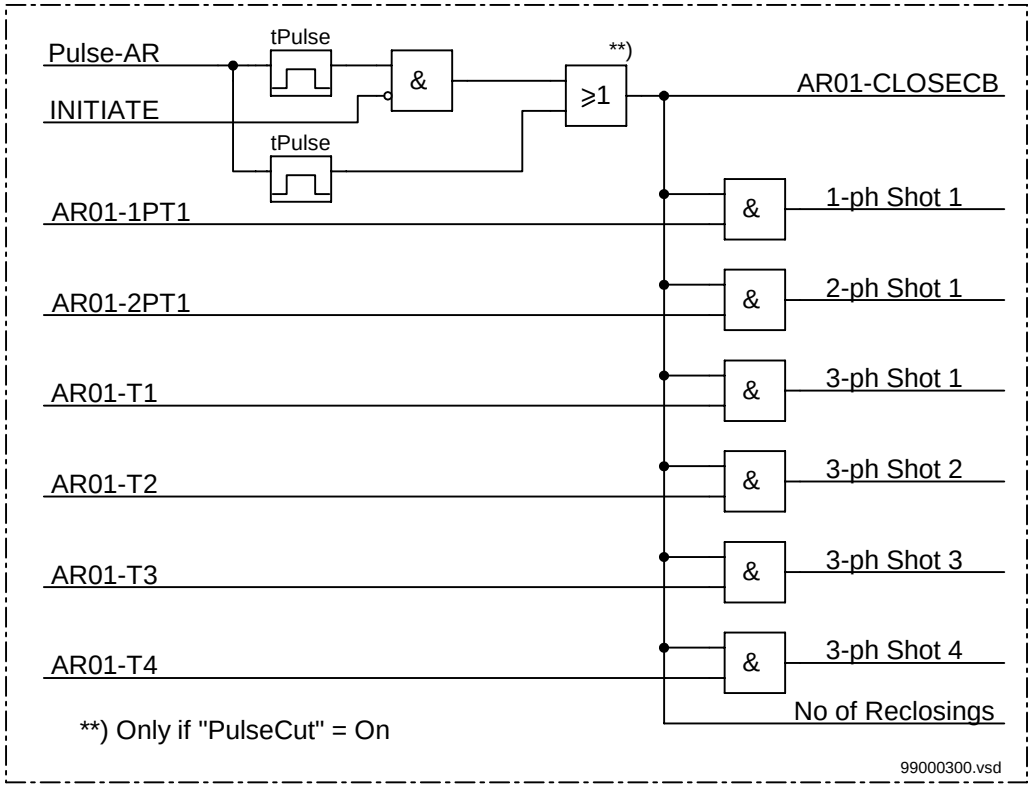


*Figure 111: Pulsing of close command and driving of operation counters*

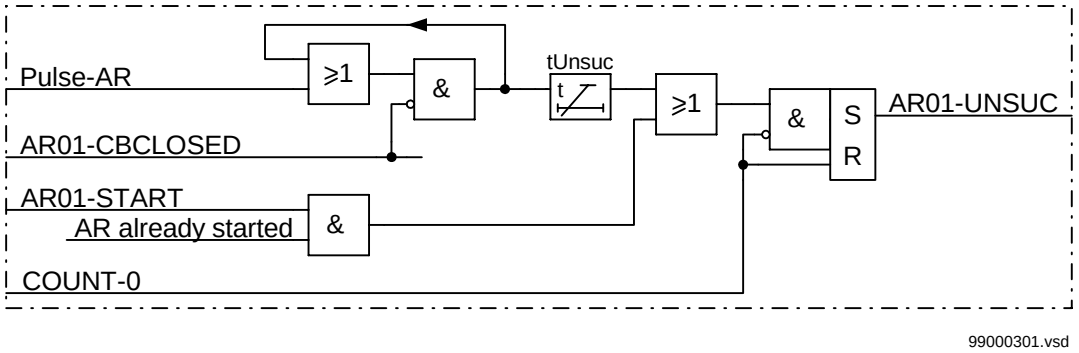


*Figure 112: Issuing of the AR01-UNSUC signal*

## 2.5 Input and output signals

*Note:* Some signals may not be present depending on the ordered options.

**Table 215: Input signals for the AR (ARnn-) function block**

| Signal | Description |
|---|---|
| ON | Enables automatic reclosing operation |
| OFF | Disables automatic reclosing operation |
| BLKON | Sets automatic recloser to blocked state |
| BLKOFF | Releases automatic recloser from blocked state |
| INHIBIT | Inhibits automatic reclosing cycle |
| RESET | Resets automatic recloser |
| START | Starts automatic reclosing cycle |
| STTHOL | Blocks automatic reclosing from thermal overload protection |
| TRSOFT | Provides for start of automatic reclosing cycle from switch-on-to-fault |
| TR2P | Information on two-pole trip from trip function |
| TR3P | Information on three-pole trip from trip function |
| CBREADY | Circuit breaker ready for operation |
| CBCLOSED | Circuit breaker closed |
| PLCLOST | Permissive communication channel out of service |
| SYNC | OK to close from synchronizing / energizing function |
| WAIT | Wait from Master for sequential reclosing |

*Note:* Some signals may not be present depending on the ordered options.

Path in local HMI: ServiceReport/Functions/AutoRecloser/AutoReclosern/FuncOutputs

**Table 216: Output signals for the AR (ARnn-) function block**

| Signal | Description |
|---|---|
| BLOCKED | Automatic recloser in blocked state |
| SETON | Automatic recloser switched on |
| INPROGR | Automatic reclosing attempt in progress |
| ACTIVE | Automatic reclosing cycle in progress |
| UNSUC | Automatic reclosing unsuccessful |
| READY | Automatic recloser prepared for reclosing cycle |
| P1P | Permit single-pole trip |
| P3P | Prepare three-pole trip |
| CLOSECB | Close command to circuit breaker |
| 1PT1 | Single-pole reclosing in progress |
| 2PT1 | Two-pole reclosing in progress |

| Signal | Description |
|---|---|
| T1 | Three-pole reclosing, shot 1 in progress |
| T2 | Three-pole reclosing, shot 2 in progress |
| T3 | Three-pole reclosing, shot 3 in progress |
| T4 | Three-pole reclosing, shot 4 in progress |
| WFMASTER | Wait from Master for sequential reclosing |

### 2.5.1 Autorecloser counter values

**Table 217: Autorecloser counter values AR (AR---)**

| Viewed data (default labels used, data is example values) | Counter value |
|---|---|
| 1ph-Shot1=<br>nnn | Recorded number of first single pole reclosing attempts |
| 2ph-Shot1=<br>nnn | Recorded number of first two pole reclosing attempts |
| 3ph-Shot1=<br>nnn | Recorded number of first three-pole reclosing attempts |
| 3ph-Shot2=<br>nnn | Recorded number of second three-pole reclosing attempts |
| 3ph-Shot3=<br>nnn | Recorded number of third three-pole reclosing attempts |
| 3ph-Shot4=<br>nnn | Recorded number of fourth three-pole reclosing attempts |
| NoOfReclosings=<br>nnn | Recorded number of all reclosing attempts |

## 2.6 Setting parameters

Path in local HMI: Settings/Functions/Group1/Autorecloser/Autorecloser1

**Table 218: Setting parameters for the automatic reclosing AR (AR---) function**

| Parameter | Range | Default | Unit | Description |
|---|---|---|---|---|
| Operation | Off,<br>Stand-by,<br>On | Off | - | Operating mode for AR function |
| NoOfReclosing | 1-4 | 1 | - | Maximum number of reclosing attempts |
| FirstShot | 3 ph,<br>1/2/3 ph,<br>1/2 ph,<br>1 ph+1*2 ph,<br>1/2+1*3 ph,<br>1 ph+1*2/3 ph | 3 ph | - | Selection of reclosing program |
| Extended t1 | Off, On | Off | - | Extended dead time for loss of permissive channel |
| t1 1Ph | 0.000-60.000<br>Step: 0.001 | 1.000 | s | Dead time for first single-phase automatic reclosing shot |
| t1 2Ph | 0.000-60.000<br>Step: 0.001 | 1.000 | s | Dead time for first two-phase automatic reclosing shot |
| t1 | 0.000-60.000<br>Step: 0.001 | 1.000 | s | Dead time for first three-phase automatic reclosing shot |
| t2 | 0.0-90000.0<br>Step: 0.1 | 30.0 | s | Dead time for second automatic reclosing shot |
| t3 | 0.0-90000.0<br>Step: 0.1 | 30.0 | s | Dead time for third automatic reclosing shot |
| t4 | 0.0-90000.0<br>Step: 0.1 | 30.0 | s | Dead time for fourth automatic reclosing shot |
| tSync | 0.0-90000.0<br>Step: 0.1 | 2.0 | s | Maximum wait time for sync |
| tPulse | 0.000-60.000<br>Step: 0.001 | 0.200 | s | Circuit breaker closing pulse length |
| CutPulse | Off, On | Off | - | Shorten closing pulse at a new trip |
| tReclaim | 0.0-90000.0<br>Step: 0.1 | 60.0 | s | Reclaim time |
| tInhibit | 0.000-60.000<br>Step: 0.001 | 5.000 | s | Inhibit reset time |
| CB Ready | CO, OCO | CO | - | Select type of circuit breaker ready signal |
| tTrip | 0.000-60.000<br>Step: 0.001 | 1.000 | s | Detection time for long trip duration to block automatic reclosing |
| Priority | None, Low,<br>High | None | - | Priority selection (Master/Slave) (when reclosing multiple circuit breakers) |
| tWaitForMaster | 0.0-90000.0<br>Step: 0.1 | 60.0 | s | Maximum wait time for Master |
| AutoCont | Off, On | Off | - | Continue with next reclosing attempt if breaker does not close |

| Parameter | Range | Default | Unit | Description |
|---|---|---|---|---|
| BlockUnsuc | Off, On | Off | - | Block automatic reclosing function for unsuccessful reclosing |
| tAutoWait | 0.000-60.000<br>Step: 0.001 | 2.000 | s | Maximum wait time between shots |
| UnsucMode | NoCBCheck, CBCheck | NOCBCheck | - | CB Check enabled or disabled for unsuccessful mode |
| tUnsuc | 0.0-90000.0<br>Step: 0.1 | 30.0 | s | CB Check time before unsuccessful |
| tCBClosed | 0.000-60.000<br>Step: 0.001 | 5.000 | s | The time a breaker must be closed before AR becomes ready for a reclosing cycle |

## 2.7 Technical data

**Table 219: AR - Autorecloser**

| Parameter | Setting range | Accuracy |
|---|---|---|
| Automatic reclosing open time: | | |
| shot 1 - t1 1ph | 0.000-60.000 s in steps of 1 ms | ± 0.5% ± 10 ms |
| shot 1 - t1 2ph | 0.000-60.000 s in steps of 1 ms | ± 0.5% ± 10 ms |
| shot 1 - t1 3ph | 0.000-60.000 s in steps of 1 ms | ± 0.5% ± 10 ms |
| shot 2 - t2 3ph | 0.0-90000.0 s in steps of 0.1 s | ± 0.5% ± 10 ms |
| shot 3 - t3 3ph | 0.0-90000.0 s in steps of 0.1 s | ± 0.5% ± 10 ms |
| shot 4 - t4 3ph | 0.0-90000.0 s in steps of 0.1 s | ± 0.5% ± 10 ms |
| Autorecloser maximum wait time for sync, tSync | 0.0-90000.0 s in steps of 0.1 s | ± 0.5% ± 10 ms |
| Duration of close pulse to circuit breaker tPulse | 0.000-60.000 s in steps of 1 ms | ± 0.5% ± 10 ms |
| Reclaim time, tReclaim | 0.0-90000.0 s in steps of 0.1 s | ± 0.5% ± 10 ms |
| Inhibit reset time, tInhibit | 0.000-60.000 s in steps of 1 ms | ± 0.5% ± 10 ms |
| Maximum trip pulse duration, tTrip (longer trip pulse durations will either extend the dead time or interrupt the reclosing sequence) | 0.000-60.000 s in steps of 1 ms | ± 0.5% ± 10 ms |
| Maximum wait time for release from Master, tWaitForMaster | 0.0-90000.0 s in steps of 0.1 s | ± 0.5% ± 10 ms |
| Maximum wait time between shots, tAutoWait | 0.000-60.000 s in steps of 1 ms | ± 0.5% ± 10 ms |
| Time delay before indicating reclosing unsuccessful, tUnsuc | 0.0-90000.0 s in steps of 0.1 s | ± 0.5% ± 10 ms |
| Time CB must be closed before AR becomes ready for a reclosing cycle, tCBClosed | 0.000-60.000 s in steps of 1 ms | ± 0.5% ± 10 ms |

**Table 220: AR - Autorecloser**

| Parameter | Value |
|---|---|
| Reclosing shots | 1-4 |
| Programs | Three pole trip: 1<br>Single, two and three pole trip: 6 |
| Number of autoreclosers | Up to six depending on terminal type (different terminal types support different CB arrangements and numbers of bays) |
| Breaker closed before start | 5 s |

# 3 Single command, 16 signals (CD)

## 3.1 Application

The terminals may be provided with a function to receive signals either from a substation automation system (SMS and/or SCS) or from the local human-machine interface, HMI. That receiving function block has 16 outputs that can be used, for example, to control high voltage apparatuses in switchyards. For local control functions, the local HMI can also be used. Together with the configuration logic circuits, the user can govern pulses or steady output signals for control purposes within the terminal or via binary outputs.

## 3.2 Functionality

The single command function consists of a function block CD for 16 binary output signals.

The output signals can be of the types Off, Steady, or Pulse. The setting is done on the MODE input, common for the whole block, from the CAP 531 configuration tool.

The outputs can be individually controlled from the operator station, remote-control gateway, or from the local HMI. Each output signal can be given a name with a maximum of 13 characters from the CAP 531 configuration tool.

The output signals, here OUT1 to OUT16, are then available for configuration to built-in functions or via the configuration logic circuits to the binary outputs of the terminal.

## 3.3 Function block

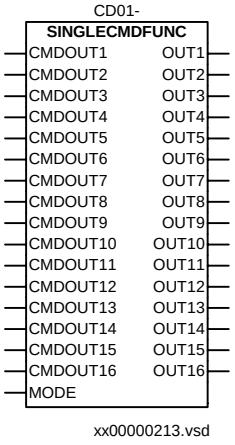

## 3.4 Input and output signals

**Table 221: Input signals for the command control (CDnn-) function**

| Signal | Description |
|---|---|
| CMDOUTy | User defined name for output y (y=1-16) of function block CDnn. String length up to 13 characters. |
| MODE | Operation mode, 0: Off, 1: Not pulsed (steady). 2: Pulsed |

Path in local HMI: ServiceReport/Functions/CDnn

**Table 222: Output signals for the command control CD (CDnn-) function**

| Signal | Description |
|---|---|
| OUTy | Command output y (y=1-16) |

## 3.5 Setting parameters

**Table 223: Setting parameters for the command control CD (CDnn-) function**

| Parameter | Range | Default | Unit | Description |
|---|---|---|---|---|
| CMDOUTy | User def. string | CDnn-CMD-OUTy | String | User defined name for output y (y=1-16) of function block CDnn. String length up to 13 characters, all characters available on the HMI can be used. Can only be set from the CAP 531 configuration tool. |
| MODE | 0, 1, 2 | 0 | - | Operation mode, 0: Off, 1: Not pulsed (steady). 2: Pulsed. Can only be set from the CAP 531 configuration tool. |

# 4 Multiple command (CM)

## 4.1 Application

The terminals may be provided with a function to receive signals either from a substation automation system or from other terminals via the interbay bus. That receiving function block has 16 outputs that can be used, together with the configuration logic circuits, for control purposes within the terminal or via binary outputs. When it is used to communicate with other terminals, these terminals must have a corresponding event function block to send the information.

## 4.2 Functionality

One multiple command function block CM01 with fast execution time also named *Binary signal interbay communication, high speed* and/or 79 multiple command function blocks CM02-CM80 with slower execution time are available in the REx 5xx terminals as options.

The output signals can be of the types Off, Steady, or Pulse. The setting is done on the MODE input, common for the whole block, from the CAP 531 configuration tool.

The multiple command function block has 16 outputs combined in one block, which can be controlled from the operator station or from other terminals. One common name for the block, with a maximum of 19 characters, is set from the configuration tool CAP 531.

The output signals, here OUT1 to OUT16, are then available for configuration to built-in functions or via the configuration logic circuits to the binary outputs of the terminal.

The command function also has a supervision function, which sets the output VALID to 0 if the block did not receive data within a configured INTERVAL time.

## 4.3 Function block

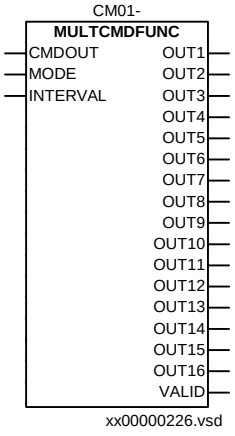

## 4.4 Input and output signals

**Table 224: Input signals for the command (CMnn-) functions**

| Signal | Description |
|---|---|
| CMDOUT | User defined common name for all outputs of function block CMnn. String length up to 19 characters. |
| INTERVAL | Time interval for supervision of received data |
| MODE | Operation mode. 0: Off, 1: Not pulsed (steady), 2: Pulsed |

Use CAP configuration tool to see status of the output signals.

**Table 225: Output signals for the command (CMnn-) functions**

| Signal | Description |
|---|---|
| OUTy | Command output y (y=1-16) |
| VALID | Received data. 0: invalid, 1: valid |

## 4.5 Setting parameters

Use CAP configuration tool to see status of the parameter settings.

**Table 226: Setting parameters for the command (CMnn-) functions**

| Parameter | Range | Default | Unit | Description |
|---|---|---|---|---|
| CMDOUT | User def. string | CMnn-CMD-OUT | String | User defined common name for all outputs of function block CMnn (nn=01-80). String length up to 19 characters. Can only be set from CAP 531 configuration tool |
| INTERVAL | 0.000-60.000 Step: 1ms | 0 | s | Time interval for supervision of received data. Can only be set from CAP 531 configuration tool |
| MODE | 0, 1, 2 | 0 | - | Operation mode. 0: Off, 1: Not pulsed (steady), 2: Pulsed. Can only be set from CAP 531 configuration tool |

# Chapter 10 Logic

**About this chapter**

This chapter describes the logic functions.

# 1 Tripping logic (TR)

## 1.1 Application

The main purpose of the TR trip logic function is to serve as a single node through which all tripping for the entire terminal is routed.

To meet the different single, double, 1 and 1/2 or other multiple circuit breaker arrangements, one or more identical TR function blocks may be provided within a single terminal. The actual number of these TR function blocks that may be included within any given terminal depends on the type of terminal. Therefore, the specific circuit breaker arrangements that can be catered for, or the number of bays of a specific arrangement that can be catered for, depends on the type of terminal.

## 1.2 Functionality

The minimum duration of a trip output signal from the TR function is settable.

The TR function has a single input through which all trip output signals from the protection functions within the terminal, or from external protection functions via one or more of the terminal's binary inputs, are routed. It has a single trip output for connection to one or more of the terminal's binary outputs, as well as to other functions within the terminal requiring this signal.

## 1.3 Input and output signals

*Note*: Some signals may not be present depending on the ordered option.

**Table 227: Input signals for the TR (TRnn-) function block**

| Signal | Description |
|---|---|
| BLOCK | Block trip logic |
| TRIN | Trip all phases |

*Note*: Some signals may not be present depending on the ordered option.

Path in local HMI: ServiceReport/Functions/TRn/FuncOutputs

**Table 228: Output signals for the TR (TRnn-) function block**

| Signal | Description |
|---|---|
| TRIP | General trip output signal |

## 1.4 Setting parameters

Path in local HMI: Settings/Functions/Groupn/TRn

**Table 229: Setting parameters for the trip logic TR (TR---) function**

| Parameter | Range | Default | Unit | Description |
|---|---|---|---|---|
| Operation | Off / On | Off | - | Operating mode for TR function |
| tTripMin | 0.000-60.000<br>Step. 0.001 | 0.150 | s | Minimum duration of trip time |

## 1.5 Technical data

**Table 230: TR - Tripping logic**

| Parameter | Value | Accuracy |
|---|---|---|
| Setting for the minimum trip pulse length, tTripMin | 0.000 - 60.000 s in steps of 1 ms | ± 0.5% ± 10 ms |

# 2 Pole discordance logic (PDc)

## 2.1 Application

Breaker pole position discordance can occur on the operation of a breaker with independent operating gears for the three poles. The reason may be an interruption in the closing or trip coil circuit, or a mechanical failure resulting in a stuck breaker pole. A pole discordance can be tolerated for a limited time, for instance during a single-phase trip-reclose cycle. The pole discordance function detects a breaker pole discordancy not generated by auto-reclose cycle and issues a trip signal for the circuit breaker.

## 2.2 Functionality

The operation of the pole discordance logic, PDc, is based on checking the position of the breaker auxiliary contacts, see figure 113.

*Figure 113: Pole discordance external detection logic.*

## 2.3 Function block

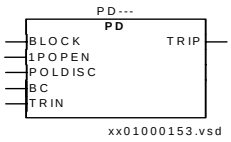


*Figure 114: PD function block, contact based*

## 2.4 Logic diagram

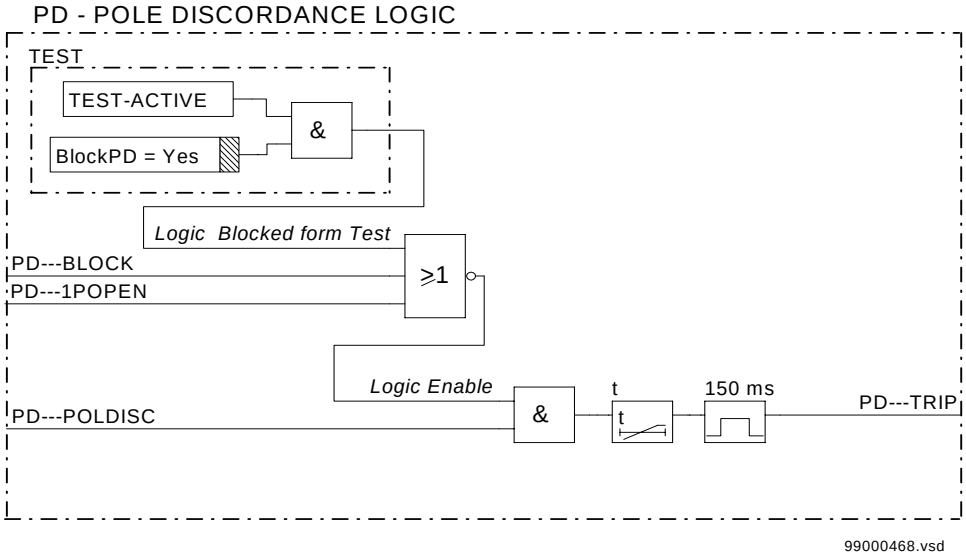


*Figure 115: Simplified logic diagram of pole discordance logic, contact based*

## 2.5 Input and output signals

**Table 231: Input signals for the PDc (PD---) function block**

| Signal | Description |
|---|---|
| BLOCK | Block of pole discordance function |
| 1POPEN | One or two phase AR in progress |
| POLDISC | Pole discordance signal from the circuit breaker |

Path in local HMI: ServiceReport/Functions/PoleDiscord/FuncOutputs

**Table 232: Output signals for the PDc (PD---) function block**

| Signal | Description |
|---|---|
| TRIP | Trip by pole discordance function |

## 2.6 Setting parameters

Path in local HMI-tree: Settings/Functions/Groupn/PoleDiscord

**Table 233: Setting parameters Pole discordance protection PD (PD---) function**

| Parameter | Range | Default | Unit | Description |
|---|---|---|---|---|
| Operation | Off, On | Off | - | Pole discordance protection On/Off |
| t | 0.000-60.000<br>Step: 0.001 | 0.500 | s | Delay timer |

## 2.7 Technical data

**Table 234: PDc - Pole discordance logic, contact based**

| Function | Setting range | Accuracy |
|---|---|---|
| Auxiliary-contact-based function - time delay | (0.000-60.000) s in steps of 1 ms | ± 0.5 % ±10 ms |

# 3 High speed binary output logic (HSBO)

## 3.1 Application

The time taken for signals to be transferred from binary inputs to protection functions, and from protection functions to binary outputs contributes to the overall tripping time. The main purpose of the HSBO high speed binary output logic is to minimize overall tripping times by establishing the critical connections to/from the binary outputs/inputs in a more direct way than with the regular I/O connections.

## 3.2 Functionality

The outputs from the HSBO logic utilize ‘fast’ connections to initiate binary outputs. The inputs to the HSBO logic utilize the same ‘fast’ connections. Input connections to the logic are derived from binary inputs, from outputs of the high speed distance protection, and from inputs to the regular trip logic and scheme communication logic. The HSBO scheme communication logic runs in parallel with the regular scheme communication logic.

The ‘fast’ connections to and from the HSBO logic comprise so called hard connections in software. This configuration is made internally and cannot be altered. The only exceptions are the connections to the binary outputs where limited configuration is possible, and required, on the part of the user.

## 3.3 Function block

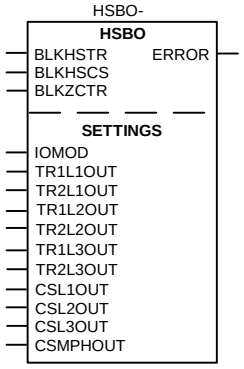


xx00000222.vsd

## 3.4 Logic diagram

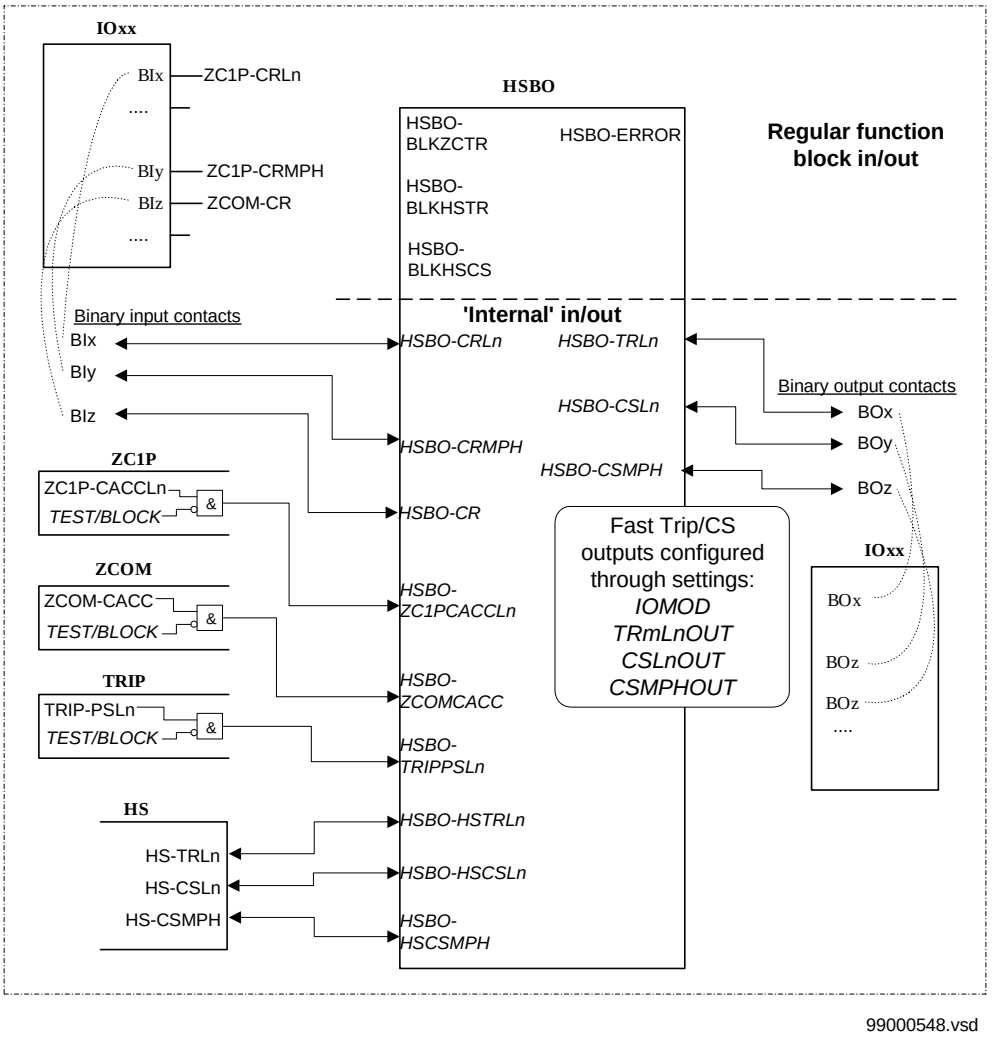


*Figure 116: High speed binary output, simplified logic diagram*

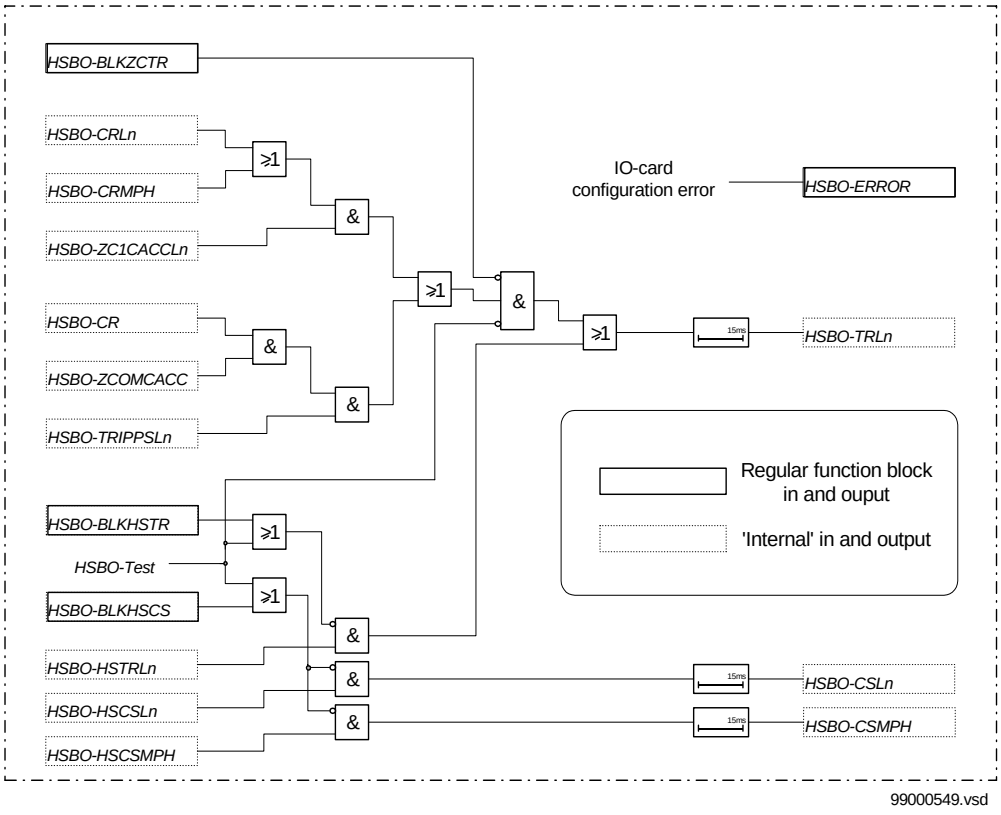


*Figure 117: Simplified logic diagram of the HSBO function logic.*

## 3.5 Input and output signals

**Table 235: Input signals for the HSBO (HSBO-) function block**

| Signal: | Description: |
|---|---|
| BLKHSTR | Blocks high speed trip |
| BLKHSCS | Blocks high speed carrier send |
| BLKZCTR | Blocks high speed scheme communication impedance trip |

Path in local HMI: ServiceReport/Functions/Impedance/HighSpeedBo/FuncOutputs

**Table 236: Output signals for the HSBO (HSBO-) function block**

| Signal: | Description: |
|---|---|
| ERROR | Error output if configuration of ‘fast’ outputs does not correspond to actual hardware |

## 3.6 Setting parameters

**Table 237: Setting parameters for the high speed binary output logic HSBO (HSBO-) function**

| Parameter | Range | Default | Unit | Description |
|---|---|---|---|---|
| IOMOD | 0-13 | 0 | - | I/O module number for the fast output trip contacts. Can only be set from the CAP 540 configuration tool. |
| TR1L1OUT | 0-24 | 0 | - | Fast trip phase L1 output contact on I/O module according to IOMOD setting. Can only be set from the CAP 540 configuration tool. |
| TR2L1OUT | 0-24 | 0 | - | Fast trip phase L1 output contact on I/O module according to IOMOD setting. Can only be set from the CAP 540 configuration tool. |
| TR1L2OUT | 0-24 | 0 | - | Fast trip phase L2 output contact on I/O module according to IOMOD setting. Can only be set from the CAP 540 configuration tool. |
| TR2L2OUT | 0-24 | 0 | - | Fast trip phase L2 output contact on I/O module according to IOMOD setting. Can only be set from the CAP 540 configuration tool. |
| TR1L3OUT | 0-24 | 0 | - | Fast trip phase L3 output contact on I/O module according to IOMOD setting. Can only be set from the CAP 540 configuration tool. |
| TR2L3OUT | 0-24 | 0 | - | Fast trip phase L3 output contact on I/O module according to IOMOD setting. Can only be set from the CAP 540 configuration tool. |
| CSL1OUT | 0-24 | 0 | - | Carrier send phase L1 output contact on I/O module according to IOMOD setting. Can only be set from the CAP 540 configuration tool. |
| CSL2OUT | 0-24 | 0 | - | Carrier send phase L2 output contact on I/O module according to IOMOD setting. Can only be set from the CAP 540 configuration tool. |
| CSL3OUT | 0-24 | 0 | - | Carrier send phase L3 output contact on I/O module according to IOMOD setting. Can only be set from the CAP 540 configuration tool. |
| CSMPHOUT | 0-24 | 0 | - | Carrier send multiple phase output contact on I/O module according to IOMOD setting. Can only be set from the CAP 540 configuration tool. |

# 4 Communication channel test logic (CCHT)

## 4.1 Application

Many secondary system applications require testing of different functions with confirmed information about the result of the test. The main purpose of the CCHT communication channel test logic is to perform testing of communication channels (power line carrier) in applications where continuous monitoring by some other means is not possible due to technical or economic reasons, and to indicate the result of the test.

## 4.2 Functionality

Starting of a communications channel test may be performed manually (by means of an external pushbutton) or automatically (by means of an included timer). When started, the CCHT logic initiates the sending of an impulse (carrier send signal) to the remote end. This action starts the operation of the applicable external functions. On receipt of the sent signal at the remote end terminal, a return signal is immediately sent back to the initiating end by the identical CCHT logic function within that terminal. The initiating end waits for this returned signal. It reports a successful or an unsuccessful response to the initiated test based on the receipt or not of this signal. An input is provided through which it is possible to abort the test by means of an external signal.

## 4.3 Function block

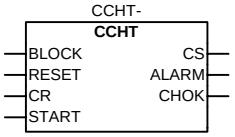


xx00000227.vsd

## 4.4 Logic diagram

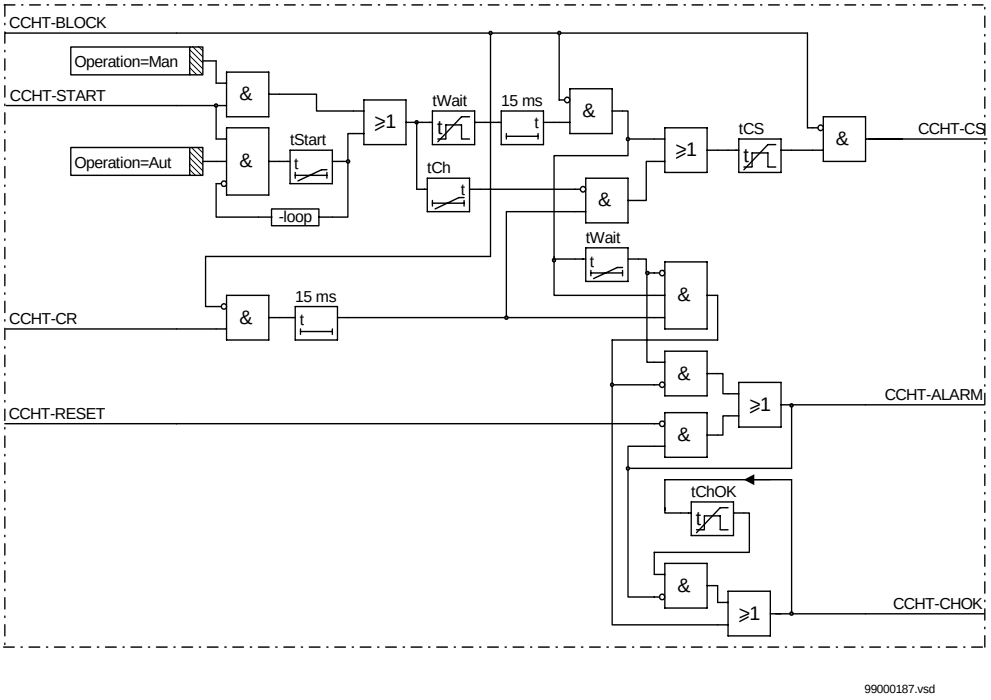


*Figure 118: Simplified logic diagram for the CCHT function*

## 4.5 Input and output signals

**Table 238: Input signals for the logic CCHT (CCHT-) function block**

| Signal | Description |
|---|---|
| BLOCK | Blocks function |
| RESET | Resets alarm |
| CR | Return carrier signal received (external test completed) |
| START | Starts test |

Path in local HMI: ServiceReport/Functions/ComChanTest/FuncOutputs

**Table 239: Output signals for the CCHT (CCHT-) function block**

| Signal | Description |
|---|---|
| CS | Send carrier signal (test external function) |
| ALARM | Test failed |
| CHOK | Test OK |

## 4.6 Setting parameters

Path in local HMI: Settings/Functions/Groupn/ComChanTest

**Table 240: Setting parameters for the communication channel test logic CCHT (CCHT-) function**

| Parameter | Range | Default | Unit | Description |
|---|---|---|---|---|
| Operation | Off, On | Off | - | Operating mode for CCHT function |
| StartMode | AutoMode<br>ManualMode | AutoMode | - | Operating mode for start of test |
| tStart | 0.0 - 90000.0<br>Step: 0.1 | 86400.0 | s | Time interval between automatic starts of channel testing |
| tWait | 0.0 - 90000.0<br>Step: 0.1 | 0.1 | s | Time interval allowed for successful return of channel test signal |
| tCh | 0.0 - 90000.0<br>Step: 0.1 | 0.5 | s | Time interval following start of test during which no received signal will be returned |
| tCS | 0.0 - 90000.0<br>Step: 0.1 | 0.1 | s | Duration of channel test output signal |
| tChOK | 0.0 - 90000.0<br>Step: 0.1 | 60.0 | s | Duration of channel OK output signal |
| tInh | 0.0 - 90000.0<br>Step: 0.1 | 0.2 | s | Duration of block extension following reset of Block input signal |

## 4.7 Technical data

**Table 241: CCHT - Communication channel test logic**

| Parameter | Setting range | Accuracy |
|---|---|---|
| Time interval between automatic starts of testing cycle, tStart | 0.0-90000.0 s in steps of 0.1 s | ± 0.5% ± 10 ms |
| Time interval available for test of the external function to be registered as successful, tWait | 0.0-90000.0 s in steps of 0.1 s | ± 0.5% ± 10 ms |
| Minimum time interval required before repeated test of the external function, tCh | 0.0-90000.0 s in steps of 0.1 s | ± 0.5% ± 10 ms |
| Duration of CS output signal, tCS | 0.0-90000.0 s in steps of 0.1 s | ± 0.5% ± 10 ms |
| Duration of CHOK output signal, tChOK | 0.0-90000.0 s in steps of 0.1 s | ± 0.5% ± 10 ms |
| Duration of inhibit condition extension after the BLOCK input signal resets, tInh | 0.0-90000.0 s in steps of 0.1 s | ± 0.5% ± 10 ms |

# 5 Binary signal transfer to remote end (RTC12)

## 5.1 General

In this function, there are two function blocks, RTC1-, and RTC2-. They are identical in all aspects.

## 5.2 Application

The main purpose of the RTC binary signal transfer to remote end function is the exchange of communication scheme related signals, trip signals and/or other binary signals between opposite ends of the line.

## 5.3 Functionality

The RTC function comprises two identical function blocks, each able to handle up to 16 inputs and 16 outputs, giving a total of 32 signals that can be transmitted in each direction.

The updated status of the selected binary signals is packaged within a data message which is sent once every computation loop.

## 5.4 Function block

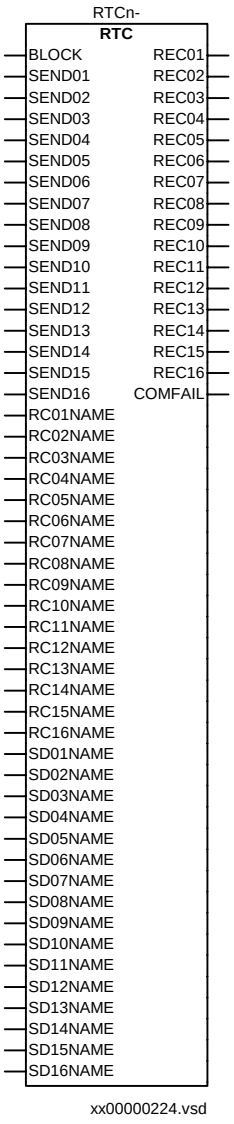

## 5.5 Input and output signals

**Table 242: Input signals for the binary signal transfer to remote end function RTCn where n = 1,2**

| Signal | Description |
|---|---|
| BLOCK | Blocks sending signals to remote end, no effect on received signals from remote end |
| SEND01-SEND16 | Binary signals to be sent to remote terminal, inputs 01-16 |
| RCyy Name<br>Where yy=01-16 | Remote terminal communication n, Name for Input yy<br>Set from CAP 540 |
| SDyy Name<br>Where yy=01-16 | Remote terminal communication n, Name for Input yy<br>Set from CAP 540 |

Path in local HMI: ServiceReport/I/O/RemTermComn/Funcoutputs

**Table 243: Output signals for the binary signal transfer to remote end function RTCn where n = 1,2**

| Signal | Description |
|---|---|
| REC01-REC16 | Binary signals received from remote terminal, outputs 01-16 |
| COMFAIL | Communication failure |

## 5.6 Setting parameters

Path in local HMI: Settings/DisturbReport/BinarySignals

**Table 244: Setting parameters for the binary signal transfer to remote end logic, RTCn, where n = 1, 2**

| Parameter | Range | Default | Unit | Description |
|---|---|---|---|---|
| RCyyNAME<br>Where yy = 01-16 | 0-13 | RTCn- RECyy | Char | Remote Terminal Communication n, Name for Output yy<br>Set from CAP 540 |
| SDyyNAME<br>Where yy =01-16 | 0-13 | RTCn-SENDyy | Char | Remote Terminal Communication n, Name for Input yy<br>Set from CAP 540 |

# 6 Event function (EV)

## 6.1 Application

When using a Substation Automation system, events can be spontaneously sent or polled from the terminal to the station level. These events are created from any available signal in the terminal that is connected to the event function block. The event function block can also handle double indication, that is normally used to indicate positions of high-voltage apparatuses. With this event function block, data also can be sent to other terminals over the interbay bus.

## 6.2 Design

As basic, 12 event function blocks EV01-EV12 running with a fast cyclicity, are available in REx 5xx. When the function Apparatus control is used in the terminal, additional 32 event function blocks EV13-EV44, running with a slower cyclicity, are available.

Each event function block has 16 connectables corresponding to 16 inputs INPUT1 to INPUT16. Every input can be given a name with up to 19 characters from the CAP 540 configuration tool.

The inputs can be used as individual events or can be defined as double indication events.

The inputs can be set individually, from the Parameter Setting Tool (PST) under the Mask-Event function, to create an event at pick-up, drop-out or at both pick-up and drop-out of the signal.

The event function blocks EV01-EV06 have inputs for information numbers and function type, which are used to define the events according to the communication standard IEC 60870-5-103.

## 6.3 Function block

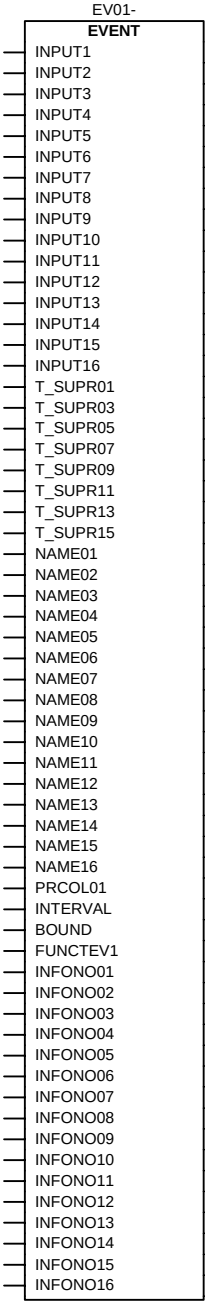


xx00000235.vsd

## 6.4 Input and output signals

**Table 245: Input signals for the EVENT (EVnn-) function block**

| Signal | Description |
|---|---|
| INPUTy | Event input y, y=1-16 |
| NAMEy | User name of signal connected to input y, y=01-16. String length up to 19 characters. |
| T_SUPR01 | Suppression time for event inputs 1and 2 |
| T_SUPR03 | Suppression time for event inputs 3 and 4 |
| T_SUPR05 | Suppression time for event inputs 5 and 6 |
| T_SUPR07 | Suppression time for event inputs 7 and 8 |
| T_SUPR09 | Suppression time for event inputs 9 and 10 |
| T_SUPR11 | Suppression time for event inputs 11 and 12 |
| T_SUPR13 | Suppression time for event inputs 13 and 14 |
| T_SUPR15 | Suppression time for event inputs 15 and 16 |
| PrColnn | Protocol for event block nn (nn=01-06). 0: Not used, 1: SPA, 2: LON, 3: SPA+LON, 4: IEC, 5: IEC+SPA, 6: IEC+LON, 7: IEC+LON+SPA. Protocol for event block nn (nn=07-44). 0: Not used, 1: SPA, 2: LON, 3: SPA+LON |
| INTERVAL | Time setting for cyclic sending of data |
| BOUND | Input signals connected to other terminals on the network, 0: not connected, 1: connected |
| FuncTEVnn | Function type for event block nn (nn=01-06), used for IEC protocol communication. Only present in blocks EV01-EV06. |
| InfoNoy | Information number for event input y, y=01-16. Used for IEC protocol communication. Only present in blocks EV01-EV06. |

## 6.5 Setting parameters

**Table 246: Setting parameters for the EVENT (EVnn-) function**

| Parameter | Range | Default | Unit | Description |
|---|---|---|---|---|
| T_SUPR01 | 0.000-60.000 Step: 0.001 | 0.000 | s | Suppression time for event input 1 and 3. Can only be set using the CAP 540 configuration tool. |
| T_SUPR03 | 0.000-60.000 Step: 0.001 | 0.000 | s | Suppression time for event input 3 and 4. Can only be set using the CAP 540 configuration tool. |
| T_SUPR05 | 0.000-60.000 Step: 0.001 | 0.000 | s | Suppression time for event input 5 and 6. Can only be set using the CAP 540 configuration tool. |
| T_SUPR07 | 0.000-60.000 Step: 0.001 | 0.000 | s | Suppression time for event input 7 and 8. Can only be set using the CAP 540 configuration tool. |
| T_SUPR09 | 0.000-60.000 Step: 0.001 | 0.000 | s | Suppression time for event input 9 and 10. Can only be set using the CAP 540 configuration tool. |

| Parameter | Range | Default | Unit | Description |
|---|---|---|---|---|
| T_SUPR11 | 0.000-60.000<br>Step: 0.001 | 0.000 | s | Suppression time for event input 11 and 12. Can only be set using the CAP 540 configuration tool. |
| T_SUPR13 | 0.000-60.000<br>Step: 0.001 | 0.000 | s | Suppression time for event input 13 and 14. Can only be set using the CAP 540 configuration tool. |
| T_SUPR15 | 0.000-60.000<br>Step: 0.001 | 0.000 | s | Suppression time for event input 15 and 16. Can only be set using the CAP 540 configuration tool. |
| NAMEy | 0-16 | EVnn-INPUTy | Char | User name of signal connected to input y, y=01-16. String length up to 19 characters. Can only be set using the CAP 540 configuration tool. |
| PrCoInn | 0-7 | 0 | - | Protocol for event block nn (nn=01-06). 0: Not used, 1: SPA, 2: LON, 3: SPA+LON, 4: IEC, 5: IEC+SPA, 6: IEC+LON, 7: IEC+LON+SPA. Range valid only for blocks EV01-EV06. Can only be set from CAP 540 configuration tool. |
| PrCoInn | 0-3 | 0 | - | Protocol for event block nn (nn=07-44). 0: Not used, 1: SPA, 2: LON, 3: SPA+LON Range valid only for blocks EV07-EV44. Can only be set from CAP 540 configuration tool. |
| INTERVAL | 0 - 60<br>Step: 1 | 0 | s | Cyclic sending of data. Can only be set from CAP 540 configuration tool. |
| BOUND | 0, 1 | 0 | - | Event connected to other terminals on the network, 0: not connected, 1: connected. Can only be set from CAP 540 configuration tool. |
| FuncTEVnn | 0-255<br>Step: 1 | 0 | - | Function type for event block nn (nn=01-06), used for IEC protocol communication. Only present in blocks EV01-EV06. |
| InfoNoy | 0-255<br>Step: 1 | 0 | - | Information number for event input y, y=01-16. Used for IEC protocol communication. Only present in blocks EV01-EV06. |
| EventMasky | No events, OnSet, OnReset, OnChange, Double Ind., Double Ind. with midpos. | No events | - | Event mask for input y, y=01-16. Can only be set from PST. |

# 7 Event counter (CN)

## 7.1 Application

The function consists of six counters which are used for storing the number of times each counter has been activated. It is also provided with a common blocking function for all six counters, to be used for example at testing. Every counter can separately be set on or off by a parameter setting.

## 7.2 Design

The function block has six inputs for increasing the counter values for each of the six counters respectively. The content of the counters are stepped one step for each positive edge of the input respectively.

The function block also has an input BLOCK. At activation of this input all six counters are blocked.

## 7.3 Function block

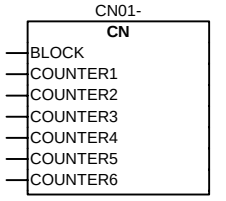

xx00000700.vsd

## 7.4 Input and output signals

**Table 247: Input signals for the CN01 function block**

| Signal | Description |
|---|---|
| BLOCK | Blocking of counters |
| COUNTER1 | Input for counter 1 |
| COUNTER2 | Input for counter 2 |
| COUNTER3 | Input for counter 3 |
| COUNTER4 | Input for counter 4 |
| COUNTER5 | Input for counter 5 |
| COUNTER6 | Input for counter 6 |

## 7.5 Setting parameters

Path in local HMI: Settings/Functions/Groupn/Counters/Countern

**Table 248: Setting parameters for the CN01 function block**

| Parameter | Range | Default | Unit | Description |
|---|---|---|---|---|
| Counter1 | Off, On | Off | | Counter 1 |
| Counter2 | Off, On | Off | | Counter 2 |
| Counter3 | Off, On | Off | | Counter 3 |
| Counter4 | Off, On | Off | | Counter 4 |
| Counter5 | Off, On | Off | | Counter 5 |
| Counter6 | Off, On | Off | | Counter 6 |
| Counter n Name | 0-13 | Counter n | Char | Name for counter n<br>Can only be set from PST |

## 7.6 Technical data

**Table 249: CN - Event counter**

| Function | Value |
|---|---|
| Counter value | 0-10000 |
| Max. count up speed | 10 pulses/s |

# Chapter 11 Monitoring

**About this chapter**

This chapter describes the monitoring functions.

# 1 Disturbance report (DRP)

## 1.1 Application

Use the disturbance report to provide the network operator with proper information about disturbances in the primary network. The function comprises several subfunctions enabling different types of users to access relevant information in a structured way.

Select appropriate binary signals to trigger the red HMI LED to indicate trips or other important alerts.

### 1.1.1 Requirement of trig condition for disturbance report

Disturbance reports, setting and internal events in REx 5xx are stored in a non volatile flash memory. Flash memories are used in many embedded solutions for storing information due to high reliability, high storage capacity, short storage time and small size.

In REx 5xx there is a potential failure problem, caused by too many write operations to the flash memory.

Our experience shows that after storing more than fifty thousand disturbances, settings or internal events the flash memory exceeds its storing capacity and the component is finally defected.

When the failure occurs there is no risk of unwanted operation of the protection terminal due to the self-supervision function that detects the failure. The terminal will give a signal for internal fail and go into blocking mode.

The above limitation on the storage capacity of the flash memory gives the following recommendation for the disturbance report trig condition:

- Cyclic trig condition more often then once/day not recommended.
- Minute pulse input is not used as a trig condition.
- Total number of stored disturbance reports shall not exceed fifty thousand.

## 1.2 Functionality

The disturbance report collects data from each subsystem for up to ten disturbances. The data is stored in nonvolatile memory, used as a cyclic buffer, always storing the latest occurring disturbances. Data is collected during an adjustable time frame, the collection window. This window allows for data collection before, during and after the fault.

The collection is started by a trigger. Any binary input signal or function block output signal can be used as a trigger. The analog signals can also be set to trigger the data collection. Both over levels and under levels are available. The trigger is common for all subsystems, hence it activates them all simultaneously.

A triggered report cycle is indicated by the yellow HMI LED, which will be lit. Binary signals may also be used to activate the red HMI LED for additional alerting of fault conditions. A disturbance report summary can be viewed on the local HMI.

Disturbance overview is a summary of all the stored disturbances. The overview is available only on a front-connected PC or via the Station Monitoring System (SMS). The overview contains:

- Disturbance index
- Date and time
- Trip signals
- Trig signal that activated the recording
- Distance to fault (requires Fault locator)
- Fault loop selected by the Fault locator (requires Fault locator)

## 1.3 Function block

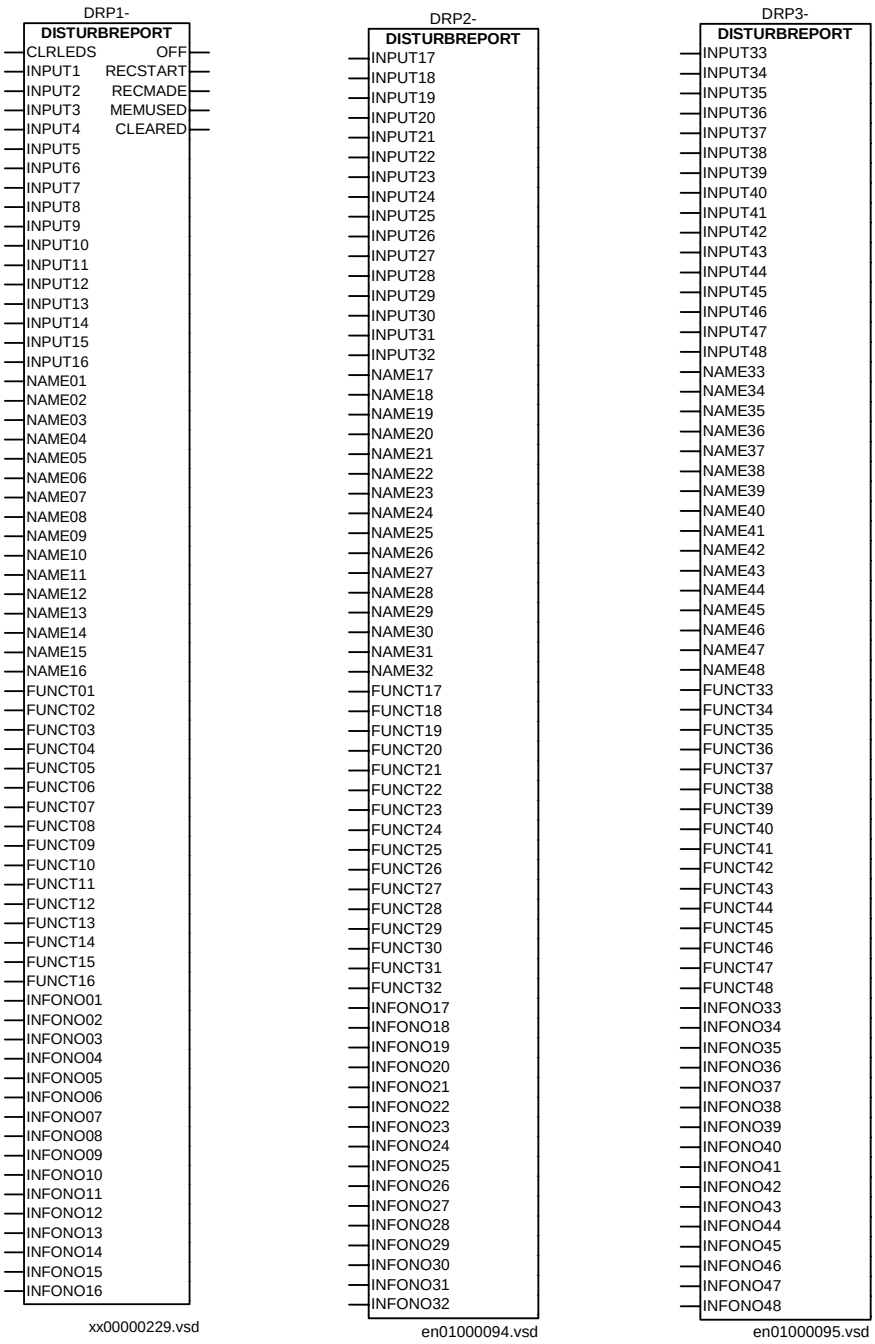

## 1.4 Input and output signals

**Table 250: Input signals for the DISTURBREPORT (DRPn-) function blocks**

| Signal | Description |
|---|---|
| CLRLEDS | Clear HMI LEDs (only DRP1) |
| INPUT1 - INPUT48 | Select binary signal to be recorded as signal no. xx were xx=1 - 48. |
| NAME01-48 | Signal name set by user, 13 char., for disturbance presentation |
| FuncT01-48 | Function type, set by user ( for IEC ) |
| InfoNo01-48 | Information number, set by user ( for IEC ) |

Path in local HMI: ServiceReport/Functions/DisturbReport

**Table 251: Output signals for the DISTURBREPORT (DRP1-) function block**

| Signal | Description |
|---|---|
| OFF | Disturbance Report function turned off |
| RECSTART | Disturbance recording started |
| RECMADE | Disturbance recording made |
| MEMUSED | More than 80% of recording memory used |
| CLEARED | All disturbances in Disturbance Report cleared |

## 1.5 Setting parameters

Path in local HMI: Settings/DisturbReport/Operation

**Table 252: Parameters for disturbance report**

| Parameter | Range | Default | Unit | Description |
|---|---|---|---|---|
| Operation | Off, On | On | - | Determines if disturbances are recorded (on) or not (off). |
| PostRetrig | Off, On | Off | - | Determines if retriggering during the post-fault recording is allowed (on) or not (off). |

Path in local HMI:Settings/DisturbReport/SequenceNo

**Table 253: Parameters for sequence number**

| Parameter | Range | Default | Unit | Description |
|---|---|---|---|---|
| SequenceNo | 0-255<br>Step: 1 | 0 | - | Allows for manual setting of the sequence number of the next disturbance. |

Path in local HMI: Settings/DisturbReport/RecordingTimes

**Table 254: Parameters for recording time**

| Parameter | Range | Default | Unit | Description |
|---|---|---|---|---|
| tPre | 0.05-0.30<br>Step: 0.01 | 0.10 | s | Prefault recording time |
| tPost | 0.1-5.0<br>Step: 0.1 | 0.5 | s | Postfault recording time |
| tLim | 0.5-6.0<br>Step: 0.1 | 1.0 | s | Fault recording time limit |

Path in local HMI: Settings/DisturbReport/BinarySignals/Inputn

**Table 255: Parameters for reporting of binary signals**

| Parameter | Range | Default | Unit | Description |
|---|---|---|---|---|
| TrigOperation | Off, On | Off | - | Determines if the signal should trigger disturbance recording |
| TrigLevel | Trig on 1, Trig on 0 | Trig on 1 | - | Selects the trigger signal transition. |
| IndicationMask | Hide, Show | Hide | - | Determines if the signal should be included in the HMI indications list |
| SetLed | Off, On | Off | - | Determines if the signal should activate the red HMI LED |
| NAME | 1 - 13 | Input *n* | Char | Signal name used in disturbance report and indications. Can only be set from the configuration tool.<br>(*n*=1-48) |

Path in local HMI: Settings/DisturbReport/AnalogSignals/Un

**Table 256: Voltage parameters for disturbance recorder**

| Parameter | Range | Default | Unit | Description |
|---|---|---|---|---|
| Operation | Off, On | On | - | Determines if the analog signal is to be recorded (on) or not (off). |
| <TrigLevel | 0-110<br>Step: 1 | 90 | % of Unb | Undervoltage trigger level in per cent of signal. |
| >TrigLevel | 0-200<br>Step: 1 | 110 | % of Unb | Overvoltage trigger level in per cent of signal. |
| <TrigOperation | Off, On | Off | - | Determines if the analog signal's under-voltage trigger condition should be used (on) or not (off) |
| >TrigOperation | Off, On | Off | - | Determines if the analog signal's over-voltage trigger condition should be used (on) or not (off) |

Path in local HMI: Settings/DisturbReport/AnalogSignals/In

**Table 257: Current parameters for disturbance recorder**

| Parameter | Range | Default | Unit | Description |
|---|---|---|---|---|
| Operation | Off, On | On | - | Determines if the analog signal is to be recorded (on) or not (off). |
| <TrigLevel | 0-200<br>Step: 1 | 50 | % of Inb | Undercurrent trigger level in per cent of signal. |
| >TrigLevel | 0-5000<br>Step: 1 | 200 | % of Inb | Overcurrent trigger level in per cent of signal. |
| <TrigOperation | Off, On | Off | - | Determines if the analog signal's under-current trigger condition should be used (on) or not (off) |
| >TrigOperation | Off, On | Off | - | Determines if the analog signal's overcur-rent trigger condition should be used (on) or not (off) |

**Table 258: Disturbance report settings**

| Operation | DisturbSum-mary | Then the results are... |
|---|---|---|
| Off | Off | • Disturbances are not stored.<br>• LED information is not displayed on the HMI and not stored.<br>• No disturbance summary is scrolled on the HMI. |
| Off | On | • Disturbances are not stored.<br>• LED information (yellow - start, red - trip) are displayed on the local HMI but not stored in the terminal.<br>• Disturbance summary is scrolled automatically on the local HMI for the two latest recorded disturbances, until cleared.<br>• The information is not stored in the terminal. |
| On | On or Off | • The disturbance report works as in normal mode.<br>• Disturbances are stored. Data can be read from the local HMI, a front-connected PC, or SMS.- LED information (yellow - start, red - trip) is stored.<br>• The disturbance summary is scrolled automatically on the local HMI for the two latest recorded disturbances, until cleared.<br>• All disturbance data that is stored during test mode remains in the ter-minal when changing back to normal mode. |

## 1.6 Technical data

**Table 259: DRP - Disturbance report setting performance**

| Data | Setting range |
|---|---|
| Pre-fault time, tPre | 50-300 ms in steps of 10 ms |
| Post-fault time, tPost | 100-5000 ms in steps of 100 ms |
| Limit time, tLim | 500-6000 ms in steps of 100 ms |
| Number of recorded disturbances | Max. 10 |

# 2 Indications

## 2.1 Application

Use the indications list to view the state of binary signals during the fault. All binary input signals to the disturbance report function are listed.

## 2.2 Functionality

The indications list tracks zero-to-one changes of binary signals during the fault period of the collection window. This means that constant logic zero, constant logic one or state changes from logic one to logic zero will not be visible in the indications list. Signals are not time tagged. In order to be listed in the indications list the:

1. signal must be connected to the DRP function blocks, (DRP1, DRP2, DRP3).
2. setting parameter, IndicationMask, for the input must be set to Show.

Output signals of other function blocks of the configuration will be listed by the signal name listed in the corresponding signal list. Binary input signals are listed by the name defined in the configuration.

The indications can be viewed on the local HMI and via SMS.

# 3 Disturbance recorder (DR)

## 3.1 Application

Use the disturbance recorder to record analog and binary signals during fault conditions in order to analyze disturbances. The analysis may include fault severity, fault duration and protection performance. Replay the recorded data in a test set to verify protection performance.

## 3.2 Functionality

The disturbance recorder records both analog and binary signal information and up to ten disturbances can be recorded.

Analog and digital signals can be used as triggers. A trigger signal does not need to be recorded.

A trigger is generated when the analog signal moves under and/or over set limit values. The trig level is compared to the signal's average peak-to-peak value, making the function insensible to DC offset. The trig condition must occur during at least one full period, that is, 20 ms for a 50 Hz network.

The recorder continuously records data in a cyclic buffer capable of storing the amount of data generated during the set pre-fault time of the collection window. When triggered, the pre-fault data is saved and the data for the fault and post-fault parts of the collection window is recorded.

The RAM area for temporary storage of recorded data is divided into subareas, one for each recording. The size of a subarea depends on the set recording times. There is sufficient memory for four consecutive recordings with a maximum number of analog channels recorded and with maximum time settings. Should no subarea be free at a new disturbance, the oldest recording is overwritten.

When a recording is completed, the post recording process:

- merges the data for analog channels with corresponding data for binary signals stored in an event buffer
- compresses the data without loosing any data accuracy
- stores the compressed data in a non-volatile memory

The disturbance recordings can be viewed via SMS or SCS.

## 3.3 Technical data

**Table 260: DR - Disturbance recorder setting performance**

| Function | Setting range |
|---|---|
| Overcurrent triggering | 0-5000% of Inb in steps of 1% |
| Undercurrent triggering | 0-200% of Inb in steps of 1% |
| Overvoltage triggering | 0-200% of Unb in steps of 1% at 100 V sec. |
| Undervoltage triggering | 0-110% of Unb in steps of 1% |

**Table 261: DR - Disturbance recorder performance**

| Data | | | Value |
|---|---|---|---|
| Number of binary signals | | | 48 |
| Number of analog signals | | | 10 |
| Sampling rate | | | 2 kHz |
| Recording bandwidth | | | 5-250 Hz |
| Total recording time with ten analog and 48 binary signals recorded. (The amount of harmonics can affect the maximum storage time) | | | 40 s typically |
| Voltage channels | Dynamic range | | (0.01-2.00) x $U_r$ at 100/200 V sec. |
| | Resolution | | 0.1% of $U_r$ |
| | Accuracy at rated frequency | $U \leq U_r$ | ± 2.5% of $U_r$ |
| | | $U > U_r$ | ± 2.5% of U |
| Current channels | Dynamic range | Without DC offset | (0.01-110.00) × $I_r$ |
| | | With full DC offset | (0.01-60.00) × $I_r$ |
| | Resolution | | 0.5 % of $I_r$ |
| | Accuracy at rated frequency | $I \leq I_r$ | ± 2.5 % of $I_r$ |
| | | $I > I_r$ | ± 2.5 % of I |

# 4 Event recorder (ER)

## 4.1 Application

Use the event recorder to obtain a list of binary signal events that occurred during the disturbance.

## 4.2 Design

When a trigger condition for the disturbance report is activated, the event recorder collects time tagged events from the 48 binary signals that are connected to disturbance report and lists the changes in status in chronological order. Each list can contain up to 150 time tagged events that can come from both internal logic signals and binary input channels and up to ten disturbances can be recorded. Events are recorded during the total recording time which depends on the set recording times and the actual fault time.

Events can be viewed via SMS and SCS.

## 4.3 Technical data

**Table 262: ER - Event recorder**

| Function | | Value |
|---|---|---|
| Event buffering capacity | Max. number of events/disturbance report | 150 |
| | Max. number of disturbance reports | 10 |

# 5 Fault locator (FLOC)

## 5.1 Application

An accurate fault locator is an essential complement to the line protection. The fault locator provides distance to fault together with information about the measuring loop that has been used in the calculation.

Reliable information on fault location reduces the outage time and minimises the need for patrolling.

The function has limitations for applications with series compensated lines.

## 5.2 Functionality

The fault locator can be started by any internal or external binary signal. Pre-fault and fault phasors of currents and voltages, that were filtered from disturbance data stored into digital sample buffers, are then used for the distance to fault calculation. The phase selective signals from the built-in protection functions provide the necessary information for the selection of the loop to be used for the calculation. It is also possible to use the external phase selection information.

For the distance to fault calculation, a line modelling algorithm that takes into account the sources at both ends of the line, is used. In this way, the influence of the load current, the infeed from the remote end and the fault resistance, can be compensated for, resulting in a highly accurate calculation.

In case of double circuit lines, the influence of the zero-sequence mutual impedance Zm0 is compensated for by considering the residual current on the parallel line.

The function indicates the distance to the fault as a percentage of the line length, in kilometers or miles as selected.

Possibility to make recalculations with changed parameter settings exists.

Information on the last ten disturbances is stored.

## 5.3 Function block

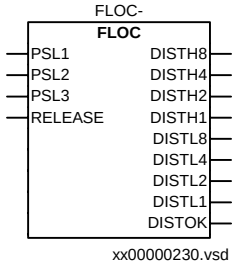

## 5.4 Input and output signals

**Table 263: Input signals for the FLOC (FLOC-) function block**

| Signal | Description |
|---|---|
| PSL1 | Fault locator phase selection information - phase L1 |
| PSL2 | Fault locator phase selection information - phase L2 |
| PSL3 | Fault locator phase selection information - phase L3 |
| RELEASE | Starts the operation of the fault location function |

Path in local HMI: ServiceReport/Functions/FaultLocator/FuncOutputs

**Table 264: Output signals for the FLOC (FLOC-) function block**

| Signal | Description |
|---|---|
| DISTH8 | Fault locator BCD (Binary Coded Decimal) H8, most significant digit, bit 4 |
| DISTH4 | Fault locator BCD H4, most significant digit, bit 3 |
| DISTH2 | Fault locator BCD H2, most significant digit, bit 2 |
| DISTH1 | Fault locator BCD H1, most significant digit, bit 1 |
| DISTL8 | Fault locator BCD L8, least significant digit, bit 4 |
| DISTL4 | Fault locator BCD L4, least significant digit, bit 3 |
| DISTL2 | Fault locator BCD L2, least significant digit, bit 2 |
| DISTL1 | Fault locator BCD L1, least significant digit, bit 1 |
| DISTOK | Fault locator distance Ok |

## 5.5 Setting parameters

Setting parameters for the resistive and reactive reach are presented for the terminals with rated current Ir= 1A. All impedance values should be divided by 5 for the terminals with rated current Ir= 5 A.

Path in local HMI: Settings/Functions/Groupn/Linereference

**Table 265: Settings for the fault locator FLOC (FLOC-) function (Line reference)**

| Parameter | Range | Default | Unit | Parameter description |
|---|---|---|---|---|
| Length unit | km, mile | km | km, mile | Line length unit in km or mile |
| Line length | 0.00 - 10000.00 Step: 0.01 | 40.00 | - | Line length value in present length unit |
| X1 | 0.001 - 1500.000 Step: 0.001 | 12.000 | ohm/phase | Positive sequence line reactance |
| R1 | 0.001 - 1500.000 Step: 0.001 | 2.000 | ohm/phase | Positive sequence line resistance |
| X0 | 0.001 - 1500.000 Step: 0.001 | 48.000 | ohm/phase | Zero sequence line reactance |
| R0 | 0.001 - 1500.000 Step: 0.001 | 8.000 | ohm/phase | Zero sequence line resistance |
| X1SA | 0.001 - 1500.000 Step: 0.001 | 12.000 | ohm/phase | Positive sequence source reactance, near end |
| R1SA | 0.001 - 1500.000 Step: 0.001 | 2.000 | ohm/phase | Positive sequence source resistance, near end |
| X1SB | 0.001 - 1500.000 Step: 0.001 | 12.000 | ohm/phase | Positive sequence source reactance, far end |
| R1SB | 0.001 - 1500.000 Step: 0.001 | 2.000 | ohm/phase | Positive sequence source resistance, far end |
| Xm0 | 0.001 - 1500.000 Step: 0.001 | 0.000 | ohm/phase | Mutual reactance from parallel line |
| Rm0 | 0.001 - 1500.000 Step: 0.001 | 0.000 | ohm/phase | Mutual resistance from parallel line |

## 5.6 Technical data

**Table 266: FLOC - Fault locator**

| Function | | | Setting range | Accuracy |
|---|---|---|---|---|
| Distance to fault locator | Reach for $I_r$ =1 A | Resistive direction | (0 - 1500) ohm/phase | ± 2.5 % (typical) |
| | | Reactive direction | (0 - 1500) ohm/phase | ± 2.5 % (typical) |
| | Phase selection | | According to input signals | |

# 6 Trip value recorder (TVR)

## 6.1 Application

Use the trip value recorder to record fault and prefault phasor values of voltages and currents to be used in detailed analysis of the severity of the fault and the phases that are involved. The recorded values can also be used to simulate the fault with a test set.

## 6.2 Design

Pre-fault and fault phasors of currents and voltages are filtered from disturbance data stored in digital sample buffers.

When the disturbance report function is triggered, the function looks for non-periodic change in the analog channels. Once the fault interception is found, the function calculates the pre-fault RMS values during one period starting 1,5 period before the fault interception. The fault values are calculated starting a few samples after the fault interception and uses samples during 1/2 - 2 periods depending on the waveform.

If no error sample is found the trigger sample is used as the start sample for the calculations. The estimation is based on samples one period before the trigger sample. In this case the calculated values are used both as pre-fault and fault values.

The recording can be viewed on the local HMI or via SMS.

# 7 Supervision of AC input quantities (DA)

## 7.1 Application

Use the AC monitoring function to provide three phase or single phase values of voltage and current. At three phase measurement, the values of apparent power, active power, reactive power, frequency and the RMS voltage and current for each phase are calculated. Also the average values of currents and voltages are calculated.

## 7.2 Functionality

Alarm limits can be set and used as triggers, e.g. to generate trip signals.

The software functions to support presentation of measured values are always present in the terminal. In order to retrieve actual values, however, the terminal must be equipped with the appropriate hardware measuring module(s), i.e. Transformer Input Module (TRM).

## 7.3 Function block

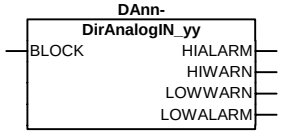


en01000073.vsd

**Table 267: AC monitoring function block types**

| Instance name ( DAnn- ) | Function block name | Description |
|---|---|---|
| DA01- | DirAnalogIn_U1 | Input voltage U1 |
| DA02- | DirAnalogIn_U2 | Input voltage U2 |
| DA03- | DirAnalogIn_U3 | Input voltage U3 |
| DA04- | DirAnalogIn_U4 | Input voltage U4 |
| DA05- | DirAnalogIn_U5 | Input voltage U5 |
| DA06- | DirAnalogIn_I1 | Input current I1 |
| DA07- | DirAnalogIn_I2 | Input current I2 |
| DA08- | DirAnalogIn_I3 | Input current I3 |
| DA09- | DirAnalogIn_I4 | Input current I4 |
| DA10- | DirAnalogIn_I5 | Input current I5 |
| DA11- | DirAnalogIn_U | Mean value U of the three phase to phase voltages calculated from U1, U2 and U3 |

| Instance name ( DAnn- ) | Function block name | Description |
|---|---|---|
| DA12- | DirAnalogIn_I | Mean value I of the three currents I1,I2 and I3 |
| DA13- | DirAnalogIn_P | Three phase active power P measured by the first three voltage and current inputs |
| DA14- | DirAnalogIn_Q | Three phase reactive power Q measured by the first three voltage and current inputs |
| DA15- | DirAnalogIn_f | Mean value of frequency f as measured by the voltage inputs U1, U2 and U3 |
| DA16- | DirAnalogIn_S | Three phase apparent power S measured by the first three voltage and current inputs |

## 7.4 Input and output signals

**Table 268: Input signals for the AC monitoring (DAnn-) function block**

| Signal | Description |
|---|---|
| BLOCK | Block updating of value for measured quantity |

Use CAP configuration tool to se status of the output signals.

**Table 269: Output signals for the AC monitoring (DAnn-) function block**

| Signal | Description |
|---|---|
| HIALARM | High Alarm for measured quantity |
| HIWARN | High Warning for measured quantity |
| LOWWARN | Low Warning for measured quantity |
| LOWALARM | Low Alarm for measured quantity |

## 7.5 Setting parameters

The PST, Parameter Setting Tool, must be used to set the parameters.

**Table 270: Setting parameters for the AC monitoring (DAnn-) function block**

| Parameter | Range | Default | Unit | Description |
|---|---|---|---|---|
| | | | | **For each voltage input channels U1 - U5:** *DA01--DA05* |
| Operation | Off, On | Off | - | Operating mode for DAnn function |
| Hysteres | 0.0-1999.9 Step: 0.1 | 5.0 | kV | Alarm hysteres for U1 - U5 |
| EnAlRem | Off, On | On | - | Immediate event when an alarm is disabled for U1 - U5 (produces an immediate event at reset of any alarm monitoring element, when On) |
| EnAlarms | Off, On | On | - | Set to 'On' to activate alarm supervision for U1 - U5 (produces an immediate event at operation of any alarm monitoring element, when On) |
| HiAlarm | 0.0-1999.9 Step: 0.1 | 220.0 | kV | High Alarm level for U1 - U5 |
| HiWarn | 0.0-1999.9 Step: 0.1 | 210.0 | kV | High Warning level for U1 - U5 |
| LowWarn | 0.0-1999.9 Step: 0.1 | 170.0 | kV | Low Warning level for U1 - U5 |
| LowAlarm | 0.0-1999.9 Step. 0.1 | 160.0 | kV | Low Alarm level for U1 - U5 |
| RepInt | 0-3600 Step: 1 | 0 | s | Time between reports for U1 - U5 in seconds. Zero = Off (duration of time interval between two reports at periodic reporting function. Setting to 0 disables the periodic reporting) |
| EnDeadB | Off, On | Off | - | Enable amplitude dead band supervision for U1 - U5 |
| DeadBand | 0.0-1999.9 Step: 0.1 | 5.0 | kV | Amplitude dead band for U1 - U5 |
| EnIDeadB | Off, On | Off | - | Enable integrating dead band supervision for U1 - U5 |
| IDeadB | 0.0-1999.9 Step: 0.1 | 10.0 | kV | Integrating dead band for U1 - U5 |
| EnDeadBP | Off, On | Off | - | Enable periodic dead band reporting U1 - U5 |
| | | | | |
| | | | | **For each current input channels I1 - I5:** *DA06 - DA10* |
| Operation | Off, On | Off | - | Operating mode for DAnn function |
| Hysteres | 0-99999 Step: 1 | 50 | A | Alarm hysteresis for I1 - I5 |
| EnAlRem | Off, On | On | - | Immediate event when an alarm is disabled for I1 - I5 (produces an immediate event at reset of any alarm monitoring element, when On) |

| Parameter | Range | Default | Unit | Description |
|---|---|---|---|---|
| EnAlarms | Off, On | Off | - | Set to 'On' to activate alarm supervision for I1 - I5 (produces an immediate event at operation of any alarm monitoring element, when On) |
| HiAlarm | 0-99999<br>Step: 1 | 900 | A | High Alarm level for I1 - I5 |
| HiWarn | 0-99999<br>Step: 1 | 800 | A | High Warning level for I1 - I5 |
| LowWarn | 0-99999<br>Step: 1 | 200 | A | Low Warning level for I1 - I5 |
| LowAlarm | 0-99999<br>Step: 1 | 100 | A | Low Alarm level for I1 - I5 |
| RepInt | 0-3600<br>Step: 1 | 0 | s | Time between reports for I1 - I5 in seconds. Zero = Off (duration of time interval between two reports at periodic reporting function. Setting to 0 disables the periodic reporting) |
| EnDeadB | Off, On | Off | - | Enable amplitude dead band supervision for I1 - I5 |
| DeadBand | 0-99999<br>Step: 1 | 50 | A | Amplitude dead band for I1 - I5 |
| EnIDeadB | Off, On | Off | - | Enable integrating dead band supervision for I1 - I5 |
| IDeadB | 0-99999<br>Step: 1 | 10000 | A | Integrating dead band for I1 - I5 |
| EnDeadBP | Off, On | Off | - | Enable periodic dead band reporting I1 - I5 |
| | | | | |
| | | | | **Mean phase-to-phase voltage measuring channel U: DA11-** |
| Operation | Off, On | Off | - | Operating mode for DAnn function |
| Hysteres | 0.0-1999.9<br>Step: 0.1 | 5.0 | kV | Alarm hysteresis for U |
| EnAlRem | Off, On | On | - | Immediate event when an alarm is disabled for U (produces an immediate event at reset of any alarm monitoring element, when On) |
| EnAlarms | Off, On | On | - | Set to 'On' to activate alarm supervision for U (produces an immediate event at operation of any alarm monitoring element, when On) |
| HiAlarm | 0.0-1999.9<br>Step: 0.1 | 220.0 | kV | High Alarm level for U |
| HiWarn | 0.0-1999.9<br>Step: 0.1 | 210.0 | kV | High Warning level for U |
| LowWarn | 0.0-1999.9<br>Step: 0.1 | 170.0 | kV | Low Warning level for U |
| LowAlarm | 0.0-1999.9<br>Step: 0.1 | 160.0 | kV | Low Alarm level for U |

| Parameter | Range | Default | Unit | Description |
|---|---|---|---|---|
| RepInt | 0-3600<br>Step: 1 | 0 | s | Time between reports for U in seconds. Zero = Off (duration of time interval between two reports at periodic reporting function. Setting to 0 disables the periodic reporting |
| EnDeadB | Off, On | Off | - | Enable amplitude dead band supervision for U |
| DeadBand | 0.0-1999.9<br>Step: 0.1 | 5.0 | kV | Amplitude dead band for U |
| EnIDeadB | Off, On | Off | - | Enable integrating dead band supervision for U |
| IDeadB | 0.0-1999.9<br>Step: 0.1 | 10.0 | kV | Integrating dead band for U |
| EnDeadBP | Off, On | Off | - | Enable periodic dead band reporting U |
| | | | | |
| | | | | **Mean current measuring channel I**: *DA12-* |
| Operation | Off, On | Off | - | Operating mode for DAnn function |
| Hysteres | 0-99999<br>Step: 1 | 50 | A | Alarm hysteresis for I |
| EnAlRem | Off, On | On | - | Immediate event when an alarm is disabled for I (produces an immediate event at reset of any alarm monitoring element, when On) |
| EnAlarms | Off, On | Off | - | Set to 'On' to activate alarm supervision for I (produces an immediate event at operation of any alarm monitoring element, when On) |
| HiAlarm | 0-99999<br>Step: 1 | 900 | A | High Alarm level for I |
| HiWarn | 0-99999<br>Step: 1 | 800 | A | High Warning level for I |
| LowWarn | 0-99999<br>Step: 1 | 200 | A | Low Warning level for I |
| LowAlarm | 0-99999<br>Step: 1 | 100 | A | Low Alarm level for I |
| RepInt | 0-3600<br>Step: 1 | 0 | s | Time between reports for I in seconds. Zero = Off (duration of time interval between two reports at periodic reporting function. Setting to 0 disables the periodic reporting) |
| EnDeadB | Off, On | Off | - | Enable amplitude dead band supervision for I |
| DeadBand | 0-99999<br>Step: 1 | 50 | A | Amplitude dead band for I |
| EnIDeadB | Off, On | Off | - | Enable integrating dead band supervision for I |
| IDeadB | 0-99999<br>Step: 1 | 10000 | A | Integrating dead band for I |
| EnDeadBP | Off, On | Off | - | Enable periodic dead band reporting I |

| Parameter | Range | Default | Unit | Description |
|---|---|---|---|---|
| | | | | |
| | | | | **Active power measuring channel P: DA13-** |
| Operation | Off, On | Off | - | Operating mode for DAnn function |
| Hysteres | 0.0-9999.9<br>Step. 0.1 | 5.0 | MW | Alarm hysteresis for P |
| EnAlRem | Off, On | On | - | Immediate event when an alarm is disabled for P (produces an immediate event at reset of any alarm monitoring element, when On) |
| EnAlarms | Off, On | Off | - | Set to 'On' to activate alarm supervision for P (produces an immediate event at operation of any alarm monitoring element, when On) |
| HiAlarm | 0.0-9999.9<br>Step: 0.1 | 300.0 | MW | High Alarm level for P |
| HiWarn | 0.0-9999.9<br>Step: 0.1 | 200.0 | MW | High Warning level for P |
| LowWarn | 0.0-9999.9<br>Step: 0.1 | 80.0 | MW | Low Warning level for P |
| LowAlarm | 0.0-9999.9<br>Step: 0.1 | 50.0 | MW | Low Alarm level for P |
| RepInt | 0-3600<br>Step: 1 | 0 | s | Time between reports for P in seconds. Zero = Off (duration of time interval between two reports at periodic reporting function. Setting to 0 disables the periodic reporting) |
| EnDeadB | Off, On | Off | - | Enable amplitude dead band supervision for P |
| DeadBand | 0.0-9999.9<br>Step: 0.1 | 1.0 | MW | Amplitude dead band for P |
| EnIDeadB | Off, On | Off | - | Enable integrating dead band supervision for P |
| IDeadB | 0.0-9999.9<br>Step: 0.1 | 10.0 | MW | Integrating dead band for P |
| EnDeadBP | Off, On | Off | - | Enable periodic dead band reporting P |
| | | | | |
| | | | | **Reactive power measuring channel Q: DA14-** |
| Operation | Off, On | Off | - | Operating mode for DAnn function |
| Hysteres | 0.0-9999.9<br>Step: 0.1 | 5.0 | Mvar | Alarm hysteresis for Q |
| EnAlRem | Off, On | On | - | Immediate event when an alarm is disabled for Q (produces an immediate event at reset of any alarm monitoring element, when On) |

| Parameter | Range | Default | Unit | Description |
|---|---|---|---|---|
| EnAlarms | Off, On | Off | - | Set to 'On' to activate alarm supervision for Q (produces an immediate event at operation of any alarm monitoring element, when On) |
| HiAlarm | 0.0-9999.9<br>Step: 0.1 | 300.0 | Mvar | High Alarm level for Q |
| HiWarn | 0.0-9999.9<br>Step: 0.1 | 200.0 | Mvar | High Warning level for Q |
| LowWarn | 0.0-9999.9<br>Step: 0.1 | 80.0 | Mvar | Low Warning level for Q |
| LowAlarm | 0.0-9999.9<br>Step: 0.1 | 50.0 | Mvar | Low Alarm level for Q |
| RepInt | 0-3600<br>Step: 1 | 0 | s | Time between reports for Q in seconds. Zero = Off (duration of time interval between two reports at periodic reporting function. Setting to 0 disables the periodic reporting) |
| EnDeadB | Off, On | Off | - | Enable amplitude dead band supervision for Q |
| DeadBand | 0.0-9999.9<br>Step: 0.1 | 1.0 | Mvar | Amplitude dead band for Q |
| EnIDeadB | Off, On | Off | - | Enable integrating dead band supervision for Q |
| IDeadB | 0.0-9999.9<br>Step: 0.1 | 10.0 | Mvar | Integrating dead band for Q |
| EnDeadBP | Off, On | Off | - | Enable periodic dead band reporting Q |
| | | | | **Frequency measuring channel f: DA15-** |
| Operation | Off, On | Off | - | Operating mode for DAnn function |
| Hysteres | 0.0-99.9<br>Step: 0.1 | 1.0 | Hz | Alarm hysteresis for f |
| EnAlRem | Off, On | On | - | Immediate event when an alarm is disabled for f (produces an immediate event at reset of any alarm monitoring element, when On) |
| EnAlarms | Off, On | Off | - | Set to 'On' to activate alarm supervision for f (produces an immediate event at operation of any alarm monitoring element, when On) |
| HiAlarm | 0.0-99.9<br>Step: 0.1 | 55.0 | Hz | High Alarm level for f |
| HiWarn | 0.0-99.9<br>Step: 0.1 | 53.0 | Hz | High Warning level for f |
| LowWarn | 0.0-99.9<br>Step: 0.1 | 47.0 | Hz | Low Warning level for f |
| LowAlarm | 0.0-99.9<br>Step: 0.1 | 45.0 | Hz | Low Alarm level for f |

| Parameter | Range | Default | Unit | Description |
|---|---|---|---|---|
| RepInt | 0-3600<br>Step: 1 | 0 | s | Time between reports for f in seconds. Zero = Off (duration of time interval between two reports at periodic reporting function. Setting to 0 disables the periodic reporting) |
| EnDeadB | Off, On | Off | - | Enable amplitude dead band supervision for f |
| DeadBand | 0.0-99.9<br>Step: 0.1 | 1.0 | Hz | Amplitude dead band for f |
| EnIDeadB | Off, On | Off | | Enable integrating dead band supervision for f |
| IDeadB | 0.0-99.9<br>Step: 0.1 | 5 | Hz | Integrating dead band for f |
| EnDeadBP | Off, On | Off | - | Enable periodic dead band reporting f |
| | | | | |
| | | | | **Apparent power measuring channel S: DA16-** |
| Operation | Off, On | Off | - | Operating mode for DAnn function |
| Hysteres | 0.0-9999.9<br>Step: 0.1 | 5.0 | MVA | Alarm hysteresis for S |
| EnAlRem | Off, On | On | - | Immediate event when an alarm is disabled for S (produces an immediate event at reset of any alarm monitoring element, when On) |
| EnAlarms | Off, On | Off | - | Set to 'On' to activate alarm supervision for S (produces an immediate event at operation of any alarm monitoring element, when On) |
| HiAlarm | 0.0-9999.9<br>Step: 0.1 | 300.0 | MVA | High Alarm level for S |
| HiWarn | 0.0-9999.9<br>Step: 0.1 | 200.0 | MVA | High Warning level for S |
| LowWarn | 0.0-9999.9<br>Step: 0.1 | 80.0 | MVA | Low Warning level for S |
| LowAlarm | 0.0-9999.9<br>Step: 0.1 | 50.0 | MVA | Low Alarm level for S |
| RepInt | 0-3600<br>Step: 1 | 0 | s | Time between reports for S in seconds. Zero = Off (duration of time interval between two reports at periodic reporting function. Setting to 0 disables the periodic reporting) |
| EnDeadB | Off, On | Off | - | Enable amplitude dead band supervision for S |
| DeadBand | 0.0-9999.9<br>Step: 0.1 | 1.0 | MVA | Amplitude dead band for S |
| EnIDeadB | Off, On | Off | - | Enable integrating dead band supervision for S |
| IDeadB | 0.0-9999.9<br>Step: 0.1 | 10.0 | MVA | Integrating dead band for S |

| Parameter | Range | Default | Unit | Description |
|---|---|---|---|---|
| EnDeadBP | Off, On | Off | - | Enable periodic dead band reporting S |
| | | | | |
| | | | | **Reporting of events to the station control system (SCS) through LON port**: |
| EventMask U1 | No Events, Report Events | No Events | - | Enables (Report Events) or disables (No Events) the reporting of events from channel DA01 to the SCS |
| EventMask U2 | No Events, Report Events | No Events | - | Enables (Report Events) or disables (No Events) the reporting of events from channel DA02 to the SCS |
| EventMask U3 | No Events, Report Events | No Events | - | Enables (Report Events) or disables (No Events) the reporting of events from channel DA03 to the SCS |
| EventMask U4 | No Events, Report Events | No Events | - | Enables (Report Events) or disables (No Events) the reporting of events from channel DA04 to the SCS |
| EventMask U5 | No Events, Report Events | No Events | - | Enables (Report Events) or disables (No Events) the reporting of events from channel DA05 to the SCS |
| EventMask I1 | No Events, Report Events | No Events | - | Enables (Report Events) or disables (No Events) the reporting of events from channel DA06 to the SCS |
| EventMask I2 | No Events, Report Events | No Events | - | Enables (Report Events) or disables (No Events) the reporting of events from channel DA07 to the SCS |
| EventMask I3 | No Events, Report Events | No Events | - | Enables (Report Events) or disables (No Events) the reporting of events from channel DA08 to the SCS |
| EventMask I4 | No Events, Report Events | No Events | - | Enables (Report Events) or disables (No Events) the reporting of events from channel DA09 to the SCS |
| EventMask I5 | No Events, Report Events | No Events | - | Enables (Report Events) or disables (No Events) the reporting of events from channel DA10 to the SCS |
| EventMask U | No Events, Report Events | No Events | - | Enables (Report Events) or disables (No Events) the reporting of events from channel DA11 to the SCS |

| Parameter | Range | Default | Unit | Description |
|---|---|---|---|---|
| EventMask I | No Events, Report Events | No Events | - | Enables (Report Events) or disables (No Events) the reporting of events from channel DA12 to the SCS |
| EventMask P | No Events, Report Events | No Events | - | Enables (Report Events) or disables (No Events) the reporting of events from channel DA13 to the SCS |
| EventMask Q | No Events, Report Events | No Events | - | Enables (Report Events) or disables (No Events) the reporting of events from channel DA14 to the SCS |
| EventMask f | No Events, Report Events | No Events | - | Enables (Report Events) or disables (No Events) the reporting of events from channel DA15 to the SCS |
| EventMask S | No Events, Report Events | No Events | - | Enables (Report Events) or disables (No Events) the reporting of events from channel DA16 to the SCS |

## 7.6 Technical data

**Table 271: Mean values (AC-monitoring)**

| Function | Nominal range | Accuracy |
|---|---|---|
| Frequency | (0.95 - 1.05) x $f_r$ | ± 0.2 Hz |
| Voltage (RMS) Ph-Ph | (0.1 - 1.5) x $U_r$ | ± 2.5% of $U_r$, at U≤ $U_r$<br>± 2.5% of U, at U> $U_r$ |
| Current (RMS) | (0.2 - 4) x $I_r$ | ± 2.5% of $I_r$, at I≤ $I_r$<br>± 2.5% of I, at I> $I_r$ |
| Active power*) | at $\|\cos \varphi\| \geq 0.9$ | ± 5.0% |
| Reactive power*) | at $\|\cos \varphi\| \leq 0.8$ | ± 7.5% |
| *) Measured at $U_r$ and 20% of $I_r$ | | |

# 8 Increased accuracy of AC input quantities (IMA)

## 8.1 Application

Select the increased accuracy option to increase the measuring accuracy of analog input channels, thus also increasing the accuracy of calculated quantities such as frequency, active and reactive power.

## 8.2 Functionality

The increased accuracy is reached by a factory calibration of the hardware. Calibration factors are stored in the terminal. If the transformer input module, A/D conversion module or the main processing module is replaced, the terminal must be factory calibrated again to retain the increased accuracy.

## 8.3 Technical data

**Table 272: IMA - Increased accuracy of AC input quantities**

| Function | Nominal range | Accuracy |
|---|---|---|
| Frequency | (0.95 - 1.05) x $f_r$ | ± 0.2 Hz |
| Voltage (RMS) Ph-Ph | (0.8 - 1.2) x $U_r$ | ± 0.25% of $U_r$, at U≤ $U_r$<br>± 0.25% of U, at U> $U_r$ |
| Current (RMS) | (0.2 - 2) x $I_r$ | ± 0.25% of $I_r$, at I≤ $I_r$<br>± 0.25% of I, at I> $I_r$ |
| Active power | 0.8 x $U_r$ < U < 1.2 x $U_r$<br>0.2 x $I_r$ < I < 2 x $I_r$ | ± 0.5% of $S_r$ at S ≤$S_r$<br>± 0.5% of S at S > $S_r$ |
| Reactive power | 0.8 x $U_r$ < U < 1.2 x $U_r$<br>0.2 x $I_r$ < I < 2 x $I_r$ | ± 0.5% of $S_r$ at S ≤$S_r$<br>± 0.5% of S at S >$S_r$ |

# 9 Supervision of mA input quantities (MI)

## 9.1 Application

Use the DC monitoring function to measure and process signals from different measuring transducers. Many devices used in process control uses low currents, usually in the range 4-20 mA or 0-20 mA to represent various parameters such as frequency, temperature and DC battery voltage.

## 9.2 Functionality

Alarm limits can be set and used as triggers, e.g. to generate trip signals.

The software functions to support presentation of measured values are always present in the terminal. In order to retrieve actual values, however, the terminal must be equipped with the mA Input Module (MIM).

## 9.3 Function block

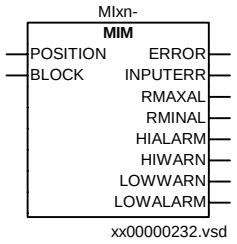


*Figure 119: A MIM module (mA input module) has six input channels. Each channel has a function block, MIxn-, where x=(1-6) is the number of the MIM module, and n=(1-6) is the number of the channel.*

## 9.4 Input and output signals

**Table 273: Input signals for the MIM (MIxn-) function block**

| Signal | Description |
|---|---|
| POSITION | I/O module slot position connector. Only present in first function block for each present input module. |
| BLOCK | Block value updating |

Path in local HMI: ServiceReport/Functions/MInn-Error

Use CAP configuration tool to see status of output signals: INPUTERR-RMINAL

**Table 274: Output signals for the MIM (MIxn-) function block**

| Signal | Description |
|---|---|
| ERROR | Module fail. Only present in first function block for each present input module. |
| INPUTERR | Input error |
| RMAXAL | Upper range limit reached |
| HIALARM | Input high alarm limit reached |
| HIWARN | Input high warning limit reached |
| LOWWARN | Input low warning limit reached |
| LOWALARM | Input low alarm limit reached |
| RMINAL | Lower range limit reached |

## 9.5 Setting parameters

### 9.5.1 Setting table for a generic mA input module MIM

The PST, Parameter Settings Tool, must be used to set the parameters

**Table 275: Module parameter**

| Parameter | Range | Default | Unit | Description |
|---|---|---|---|---|
| SampRate | 5-255<br>Step: 1 | 5 | Hz | Sampling Rate for mA Input Module x |

The PST, Parameter Settings Tool, must be used to set the parameters

**Table 276: Input n, where n = 1 - 6**

| Parameter | Range | Default | Unit | Description |
|---|---|---|---|---|
| Name | 0-13 | MIx*n* -Value | Char | User defined name for input *n* in module x. String length up to 13 characters, all characters available on the HMI can be used |
| Operation | Off, On | Off | - | Input *n* |
| Calib | Off, On | On | - | Set to 'On' to use production calibration for Input *n* |
| ChSign | Off, On | Off | - | Set to 'On' if sign of Input *n* shall be changed |
| Unit | 0-5 | Unit *n* | Char | State a 5 character unit name for Input *n* |
| Hysteres | 0.0-20.0<br>Step: 0.1 | 1.0 | mA | Alarm hysteresis for Input *n* |
| EnAlRem | Off, On | Off | - | Immediate event when an alarm is removed for Input *n* |
| I_Max | -25.00-25.00<br>Step: 0.01 | 20.00 | mA | Max current of transducer to Input *n* |

| Parameter | Range | Default | Unit | Description |
|---|---|---|---|---|
| I_Min | -25.00-25.00<br>Step: 0.01 | 4.00 | mA | Min current of transducer to Input *n* |
| EnAlarm | Off, On | Off | - | Set to 'On' to activate alarm supervision for Input *n* |
| HiAlarm | -25.00-25.00<br>Step: 0.01 | 19.00 | mA | High Alarm level for Input *n* |
| HiWarn | -25.00-25.00<br>Step: 0.01 | 18.00 | mA | High Warning level for Input *n* |
| LowWarn | -25.00-25.00<br>Step: 0.01 | 6.00 | mA | Low warning level for Input *n* |
| LowAlarm | -25.00-25.00<br>Step: 0.01 | 5.00 | mA | Low Alarm level for Input *n* |
| RepInt | 0-3600<br>Step: 1 | 0 | s | Time between reports for Input *n* |
| EnDeadB | Off, On | Off | - | Enable amplitude dead band supervision for Input *n* |
| DeadBand | 0.00-20.00<br>Step: 0.01 | 1.00 | mA | Amplitude dead band for Input *n* |
| EnIDeadB | Off, On | Off | - | Enable integrating dead band supervision for Input *n* |
| IDeadB | 0.00-1000.00<br>Step: 0.01 | 2.00 | mA | Integrating dead band for Input *n* |
| EnDeadBP | Off, On | Off | - | Enable periodic dead band reporting Input *n* |
| MaxValue | -1000.00-1000.00<br>Step: 0.01 | 20.00 | - | Max primary value corr. to I_Max, Input *n*. It determines the maximum value of the measuring transducer primary measuring quantity, which corresponds to the maximum permitted input current I_Max |
| MinValue | -1000.00-1000.00<br>Step: 0.01 | 4.00 | - | Min primary value corr. to I_Min, Input 1. It determines the minimum value of the measuring transducer primary measuring quantity, which corresponds to the minimum permitted input current I_Min |

## 9.6 Technical data

**Table 277: MIM - mA measuring function**

| Function | Setting range | Accuracy |
|---|---|---|
| mA measuring function | ± 5, ± 10, +± 20 mA 0-5, 0-10, 0-20, 4-20 mA | ± 0.1 % of set value ± 0.005 mA |
| Max current of transducer to input, I_Max | (-25.00 to +25.00) mA in steps of 0.01 | |
| Min current of transducer to input, I_Min | (-25.00 to +25.00) mA in steps of 0.01 | |
| High alarm level for input, HiAlarm | (-25.00 to +25.00) mA in steps of 0.01 | |
| High warning level for input, HiWarn | (-25.00 to +25.00) mA in steps of 0.01 | |
| Low warning level for input, LowWarn | (-25.00 to +25.00) mA in steps of 0.01 | |
| Low alarm level for input, Low-Alarm | (-25.00 to +25.00) mA in steps of 0.01 | |
| Alarm hysteresis for input, Hys-teresis | (0-20) mA in steps of 1 | |
| Amplitude dead band for input, DeadBand | (0-20) mA in steps of 1 | |
| Integrating dead band for input, IDeadB | (0.00-1000.00) mA in steps of 0.01 | |

# Chapter 12 Metering

**About this chapter**

This chapter describes the metering functions.

# 1 Pulse counter logic for metering (PC)

## 1.1 Application

The pulse counter logic function counts externally generated binary pulses, for instance pulses coming from an external energy meter, for calculation of energy consumption values. The pulses are captured by the binary input module and then read by the pulse counter function. The number of pulses in the counter is then reported via LON to the station control system or read via SPA from the station monitoring system as a service value.

## 1.2 Design

Up to 12 inputs located on binary input modules can be used for counting of pulses with a frequency of up to 40 Hz. The registration of pulses is done for positive transitions (0 to 1) on any of the 16 binary input channels on the input module.

Pulse counter values are read from the operator workplace with predefined cyclicity without reset. The integration time period can be set in the range from 30 seconds to 60 minutes and is synchronized with absolute system time.

The counter value is a 32-bit, signed integer with a range 0...+2147483647. The reported value over the communication bus contains Identity, Value, Time and Pulse Counter Quality.

## 1.3 Function block

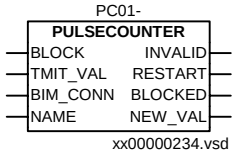


## 1.4 Input and output signals

**Table 278: Input signals for the PC (PCnn-) function block**

| Signal | Description |
|---|---|
| BLOCK | Block acquisition |
| TMIT_VAL | Asynchronous reading. Pulsing of this input makes an additional reading of the pulse input. Value is read at TMIT_VAL positive flank. |
| BIM_CONN | Binary input module connection used for pulse acquisition |
| NAME | User defined name. String length up to 19 characters. |

**Table 279: Output signals for the PC (PCnn-) function block**

| Signal | Description |
|---|---|
| INVALID | Set when used BIM fails or has wrong configuration |
| RESTART | Set if counter value does not comprise a full integration cycle for read report |
| BLOCKED | Set when BLOCK input is set or when the used BIM is inoperative |
| NEW_VAL | New value exists. Set if counter value has changed since last read report |

## 1.5 Setting parameters

**Table 280: Setting parameters for the pulse counter (PCnn-) functions**

| Parameter | Range | Default | Unit | Description |
|---|---|---|---|---|
| NAME | 0-19 | PCnn-NAME | Char | User defined name for pulse counter nn (nn = 01-12). String length up to 19 characters. Can only be set using the CAP 531 configuration tool. |
| Operation | Off, On | Off | - | Operating mode for PC function. Can only be set from PST. |
| CycleTime | 30 s, 1 min, 1min 30 s, 2 min, 2 min 30 s, 3 min, 4 min, 5 min, 6 min, 7 min30s, 10 min, 12min, 15 min, 20 min, 30 min, 60 min | 15min | - | Reporting of counter value cycle time in minutes and seconds. Can only be set from PST. |
| EventMasknn | No events, Report events | No events | - | Mask for analog events from pulse counter nn. Can only be set from PST. |

## 1.6 Technical data

**Table 281: PC - Pulse counter logic for metering**

| Function | Setting range | Accuracy |
|---|---|---|
| Input frequency | See Binary Input Module (BIM) | - |
| Cycle time for pulse counter | 30 s, 1 min, 1 min 30 s, 2 min, 2 min 30 s, 3 min, 4 min, 5 min, 6 min, 7 min 30s, 10 min, 12 min, 15 min, 20 min, 30 min, 60 min | ± 0,1% of set value |

# Chapter 13 System protection and control functions

**About this chapter**

This chapter describes the system protection and control functions

# 1 Pole slip protection (PSP)

## 1.1 Application

Sudden events in an electrical power system such as large jumps in load, fault occurrence or fault clearance, can cause oscillations referred to as power swings. In a recoverable situation, the power swings will decay and stable operation will be resumed; in a non-recoverable situation, the power swings become so severe that the synchronism is lost, a condition referred to as pole slipping. The main purpose of the PSP pole slip protection is to detect, evaluate, and take the required action for pole slipping occurrences in the power system.

## 1.2 Functionality

The PSP function comprises an inner and an outer quadrilateral measurement characteristic. It detects oscillations in the power system by measuring the time it takes the transient impedance to pass through the impedance area between the outer and the inner characteristics. Oscillations are identified by transition times longer than timer settings. The impedance measuring principle is the same as that used for the distance protection zones. The impedance and the transient impedance time are measured in all three phases separately. One-out-of-three or two-out-of-three operating modes can be selected permanently or adaptively according to the specific system operating conditions.

Oscillations with an oscillation period as low as 200 ms (i.e. with a slip frequency as high as 10% of the rated frequency on a 50 Hz basis) can be detected for normal system operating conditions, as well as during the dead time of a single-pole automatic reclosing cycle. Different timers are used for initial and consecutive pole slips, securing a high degree of differentiation between oscillation and fault conditions.

It is possible to inhibit the ocsillation detected output on detection of earth fault current. This can be used to release the operation of the distance protection function for earth faults during power oscillation conditions.

The PSP function has two tripping areas. These are located within the operating area, which is located within the inner characteristic. On detection of a new oscillation, the activation of a trip output will depend on the applied settings. These determine the direction of the transition for which tripping is permitted, whether tripping will occur on entry of the measured impedance into a tripping area, or on its exit from the tripping area, and through which tripping area the transition must be measured for tripping to occur. The applied settings also determine the number of pole slips required before the trip output is issued.

## 1.3 Function block

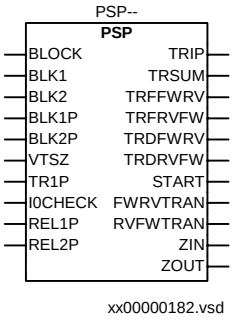


## 1.4 Logic diagram

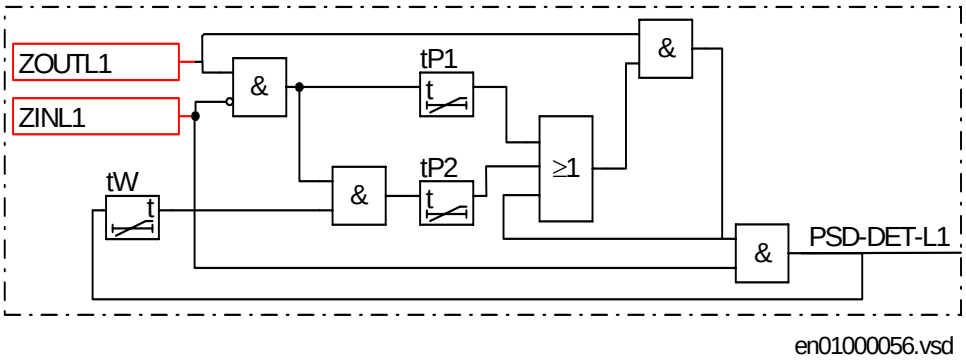


*Figure 120: Detection of oscillation in phase L1*

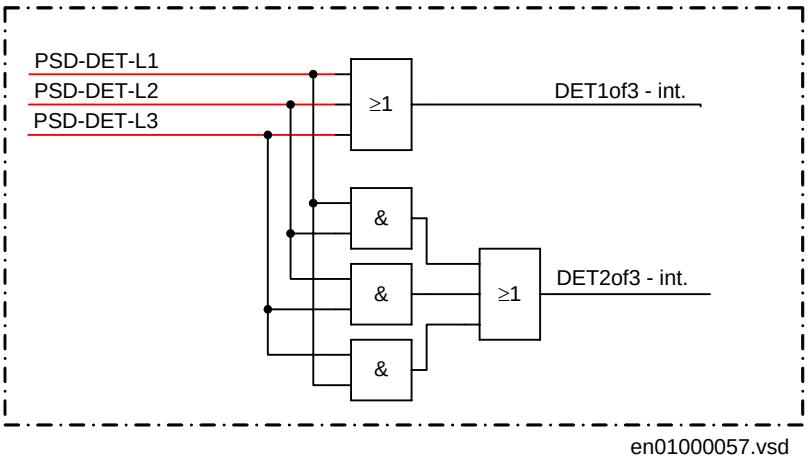


*Figure 121: Simplified logic diagram for "one of three" and "two of three" oscillation detection logic*

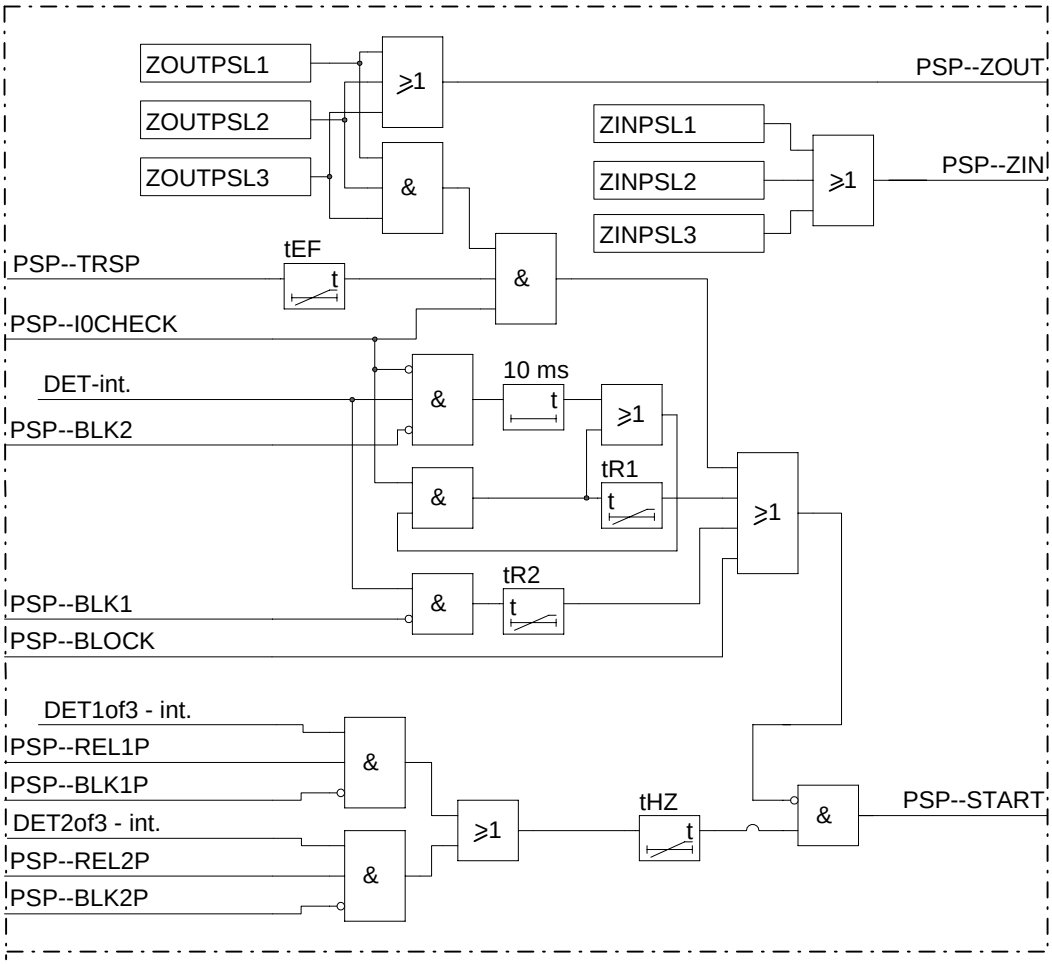


*Figure 122: Simplified logic diagram for cooperation with distance protection function*

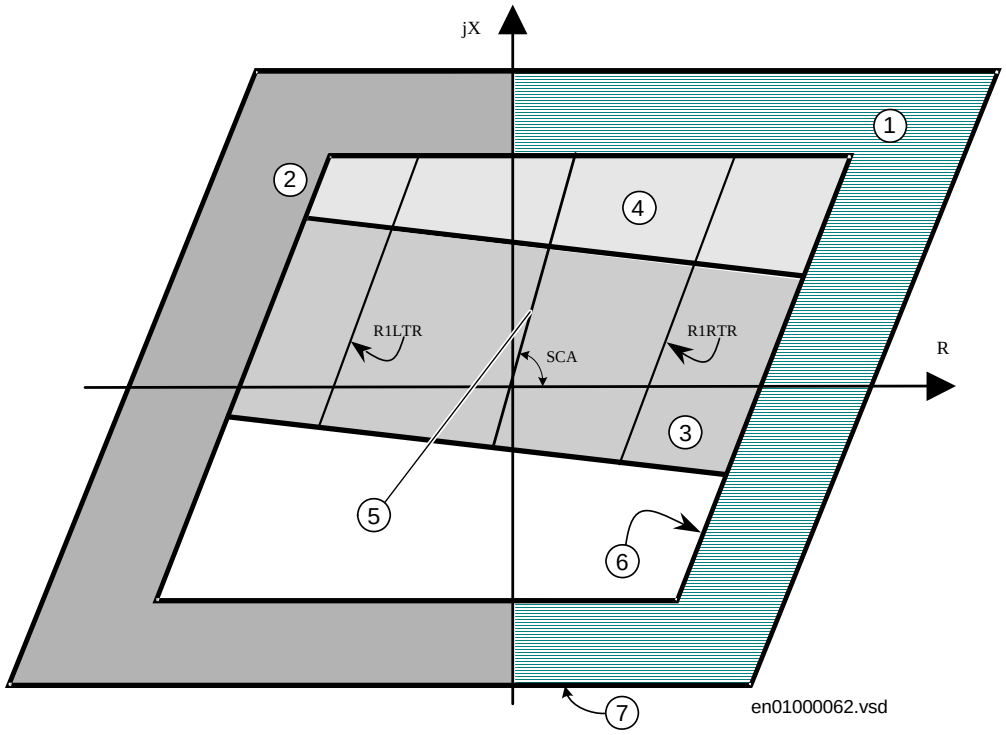


1 Forward - reverse detection region
2 Reverse - forward detection region
3 Fast trip region
4 Delayed trip region
5 System impedance
6 Internal operating boundary
7 External operating boundary

*Figure 123: The impedance operating plane is divided in two detection regions and two trip regions.*

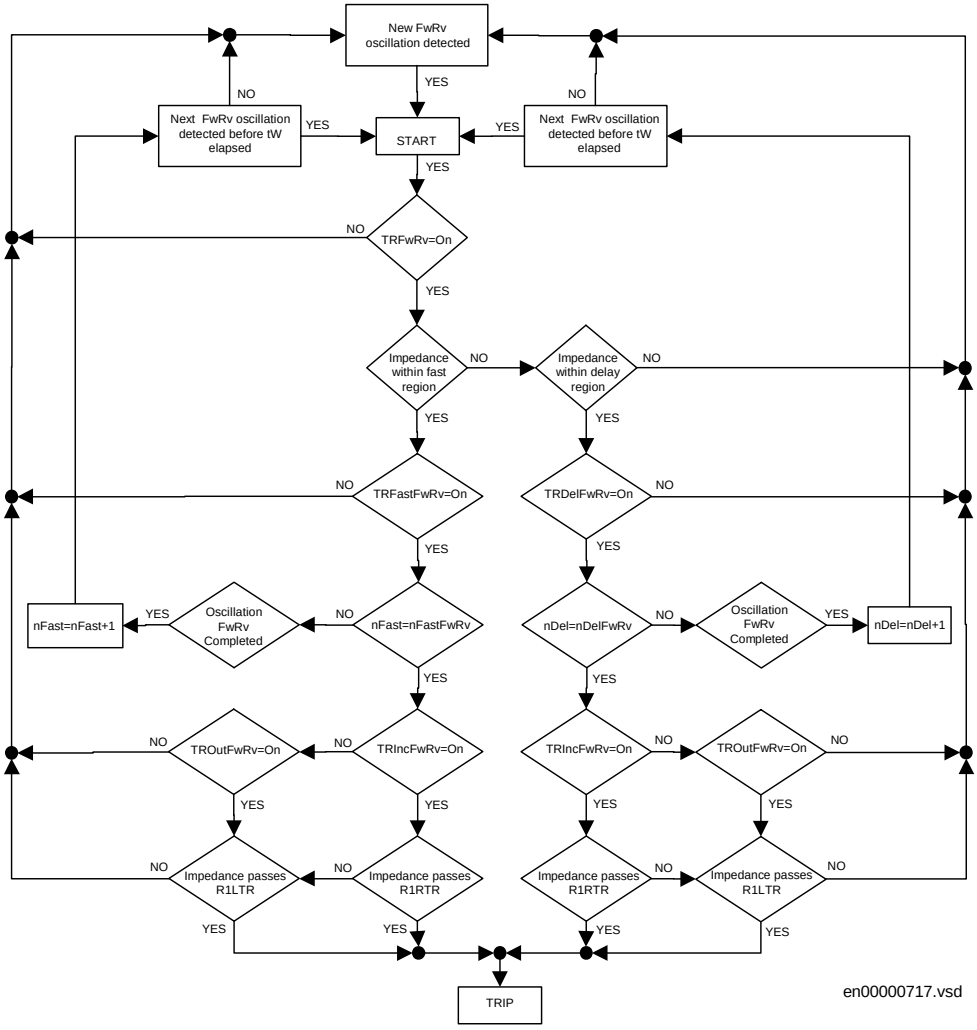


*Figure 124: Flow-chart presenting the operation of the pole slip protection for the forward to reverse transition (FwRv) after the oscillation has been detected.*

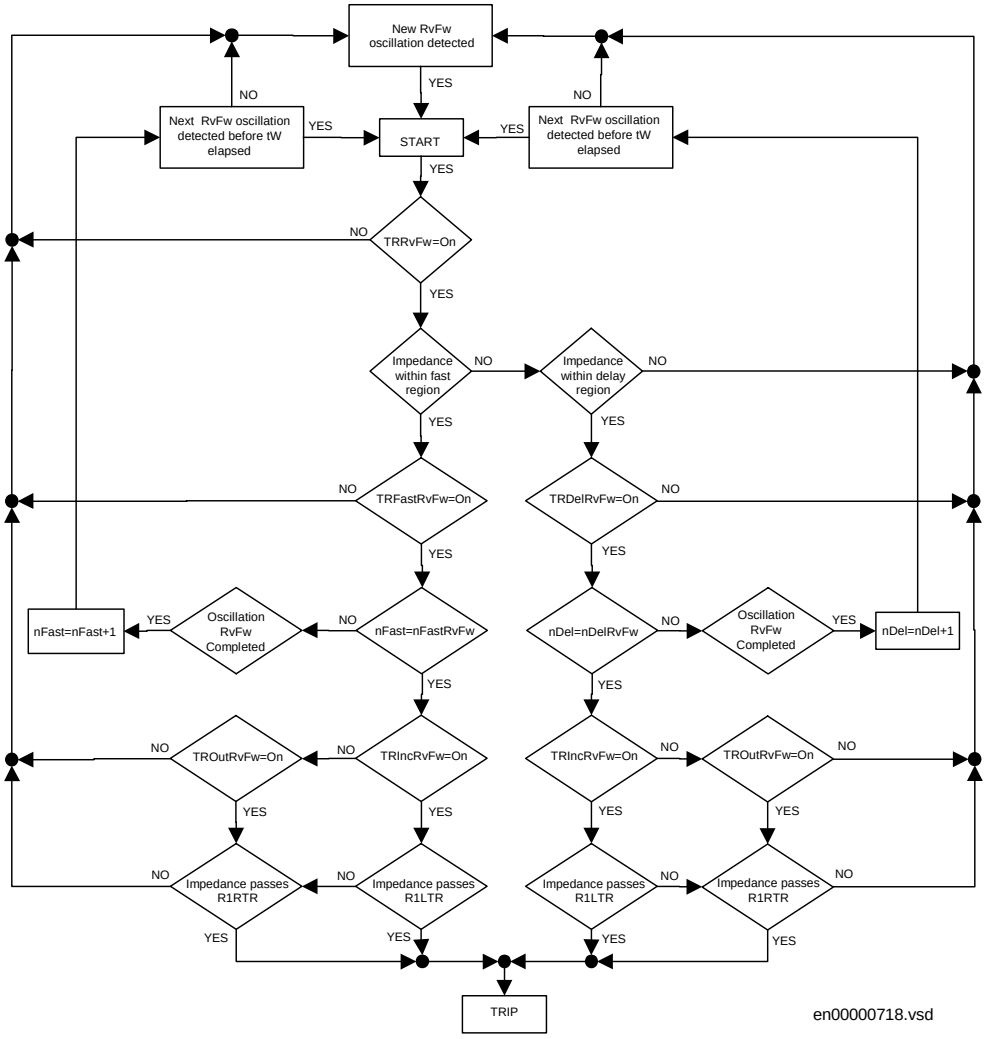


*Figure 125: Flow-chart presenting the operation of the pole slip protection for the reverse to forward transition (RvFw) after the oscillation has been detected.*

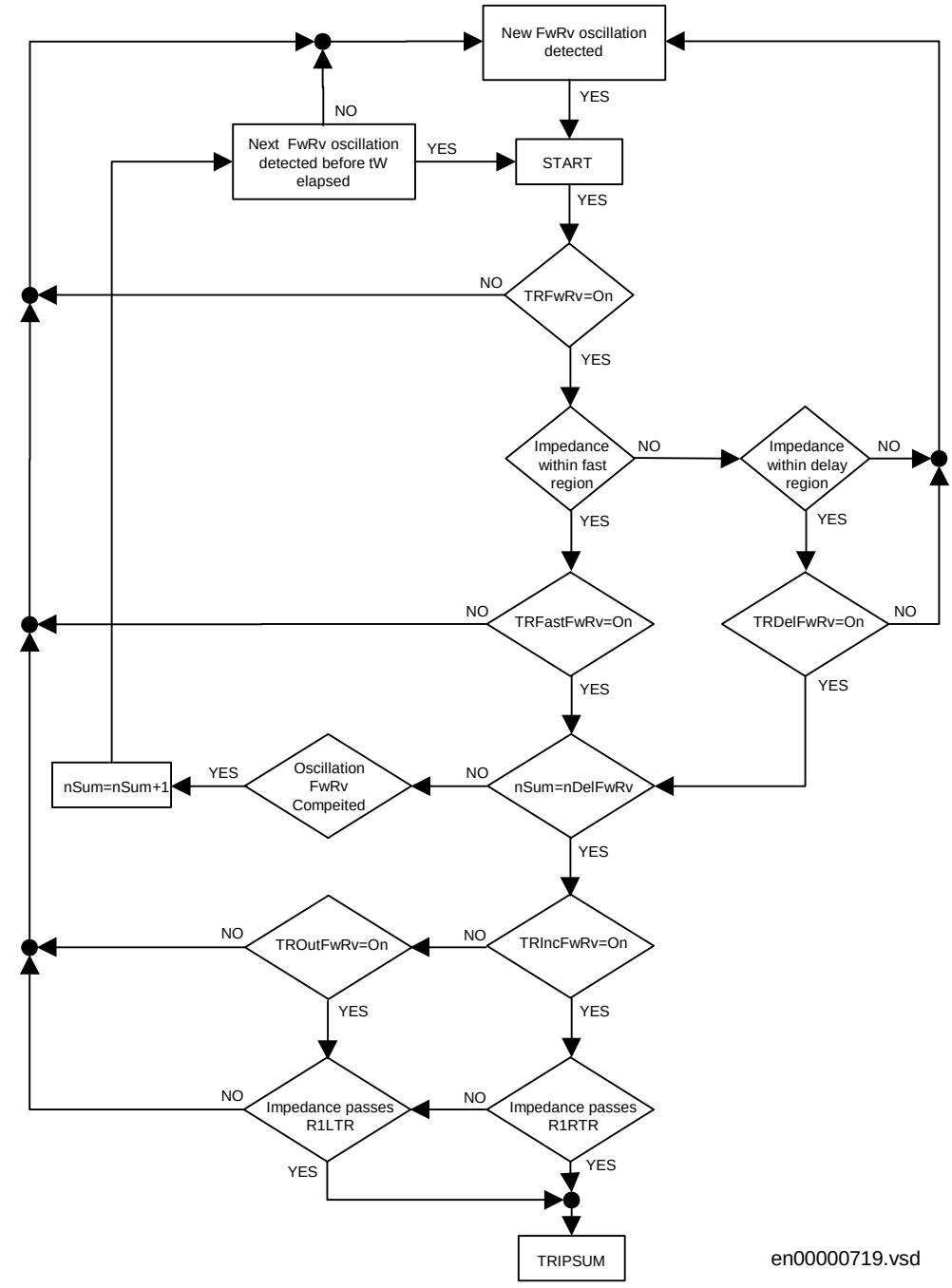


*Figure 126: Flow-chart presenting summation trip (TRIPSUM) of the pole slip protection for the forward to reverse transition (FwRv).*

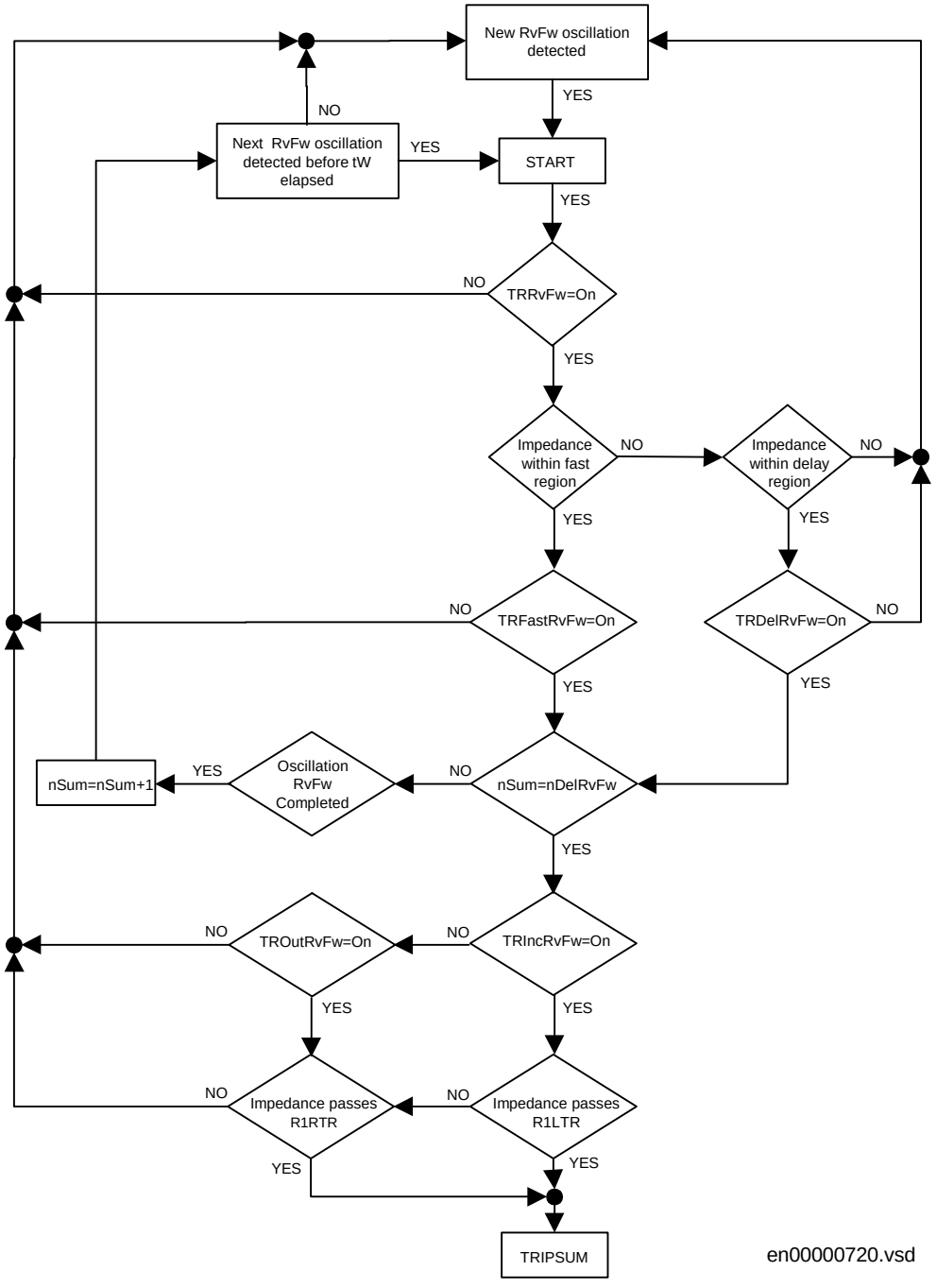


*Figure 127: Flow-chart presenting summation trip (TRIPSUM) of the pole slip protection for the reverse to forward transition (RvFw).*

## 1.5 Input and output signals

**Table 282: Input signals for the PSP (PSP--) function block**

| Signal | Description |
|---|---|
| BLOCK | Blocks function |
| BLK1 | Blocks the inhibit condition controlled by the tR2 timer |
| BLK2 | Blocks the inhibit condition based on residual current detection, unless within tEF timer following 1-pole trip |
| BLK1P | Blocks one-out-of-three phase detection of the oscillation |
| BLK2P | Blocks two-out-of-three phase detection of the oscillation |
| VTSZ | Blocks the operation of the PSP on fuse failure detection |
| TR1P | Starts the tEF timer for 1-pole trip |
| I0CHECK | Residual current detection used to inhibit PSP-START output |
| REL1P | Releases one-out-of-three phase detection of the oscillation |
| REL2P | Releases two-out-of-three phase detection of the oscillation |

Path in local HMI: ServiceReport/Functions/Impedance/PoleSlipProt/FuncOutputs

**Table 283: Output signals for the PSP (PSP--) function block**

| Signal | Description |
|---|---|
| TRIP | Trip output |
| TRSUM | Delayed trip caused by transitions passing either delayed or fast tripping area |
| TRFFWRV | Fast trip for forward to reverse transition |
| TRFRVFW | Fast trip for reverse to forward transition |
| TRDFWRV | Delayed trip for forward to reverse transition |
| TRDRVFW | Delayed trip for reverse to forward transition |
| START | Oscillation detected |
| FWRVTRAN | Forward to reverse direction transition detected |
| RVFWTRAN | Reverse to forward direction transition detected |
| ZIN | Measured impedance within the inner characteristic boundary |
| ZOUT | Measured impedance within the outer characteristic boundary |

## 1.6 Setting parameters

Path in local HMI-tree: Settings/Functions/Groupn/Impedance/PowerSlipProt

**Table 284: Setting parameters for the pole slip protection PSP (PSP--) function (reaches given for $I_r$ = 1A, divide by 5 for $I_r$ = 5A)**

| Parameter | Range | Default | Unit | Description |
|---|---|---|---|---|
| Operation | On, Off | Off | - | Operating mode for PSP function |
| R1LEXT | 0.10-400.00 Step: 0.01 | 60.00 | ohm/phase | Resistive reach of the left side external oscillation detection boundary. |
| R1LINT | 0.10-400.00 Step: 0.01 | 45.00 | ohm/phase | Resistive reach of the left side internal oscillation detection boundary. |
| R1RINT | 0.10-400.00 Step: 0.01 | 45.00 | ohm/phase | Resistive reach of the right side internal oscillation detection boundary. |
| R1REXT | 0.10-400.00 Step: 0.01 | 60.00 | ohm/phase | Resistive reach of the right side external oscillation detection boundary. |
| R1LTR | 0.10-400.00 Step: 0.01 | 35.00 | ohm/phase | Resistive reach of the left side tripping characteristic. |
| R1RTR | 0.10-400.00 Step: 0.01 | 35.00 | ohm/phase | Resistive reach of the right side tripping characteristic. |
| X1REXT | 0.10-400.00 Step: 0.01 | 60.00 | ohm/phase | Reactive reach of the external oscillation detection boundary in reverse direction. |
| X1RINT | 0.10-400.00 Step: 0.01 | 45.00 | ohm/phase | Reactive reach of the internal oscillation detection boundary in reverse direction. |
| X1FINT | 0.10-400.00 Step: 0.01 | 45.00 | ohm/phase | Reactive reach of the internal oscillation detection boundary in forward direction. |
| X1FEXT | 0.10-400.00 Step: 0.01 | 60.00 | ohm/phase | Reactive reach of the external oscillation detection boundary in forward direction. |
| SCA | 75.0-90.0 Step: 0.1 | 90.0 | degrees | System characteristic angle. |
| X1PSLFw | 0.10-400.00 Step: 0.01 | 35.00 | ohm/phase | Positive sequence reactance determining the forward reactive reach of the fast tripping zone. |
| R1PSLFw | 0.10-400.00 Step: 0.01 | 1.50 | ohm/phase | Positive sequence resistance determining the forward resistive reach of the fast tripping zone. |
| X1PSLRv | 0.10-400.00 Step: 0.01 | 0.10 | ohm/phase | Positive sequence reactance determining the reverse reactive reach of the fast tripping zone. |
| R1PSLRv | 0.10-400.00 Step: 0.01 | 0.10 | ohm/phase | Positive sequence resistance determining the reverse resistive reach of the fast tripping zone. |
| tP1 | 0.000-60.000 Step: 0.001 | 0.045 | s | Transition time used for the detection of the initial oscillation |
| tP2 | 0.000-60.000 Step: 0.001 | 0.015 | s | Transition time used for the detection of subsequent oscillations. |
| tW | 0.000-60.000 Step: 0.001 | 0.350 | s | Waiting time to distinguish between new and subsequent oscillations. |

| Parameter | Range | Default | Unit | Description |
|---|---|---|---|---|
| tEF | 0.000-60.000 Step: 0.001 | 3.000 | s | Time window after single pole tripping in which to allow residual current detection to inhibit the output for a detected oscillation. |
| tR1 | 0.000-60.000 Step: 0.001 | 0.040 | s | Time delay required to inhibit the oscillation detected output by residual current detection following oscillation detection. |
| tR2 | 0.000-60.000 Step: 0.001 | 2.000 | s | Time delay required for the measured impedance to remain within the oscillation detection area before inhibiting the oscillation detected output. |
| tHZ | 0.000-60.000 Step: 0.001 | 0.500 | s | Prolongation time of the oscillation detected output. |
| TRFwRv | On, Off | Off | - | Trip for FwRv transitions enabled or disabled. |
| TRIncFwRv | On, Off | Off | - | Trip for FwRv transitions in incoming mode enabled or disabled. |
| TROutFwRv | On, Off | Off | - | Trip for FwRv transitions in outgoing mode enabled or disabled. |
| TRFastFwRv | On, Off | Off | - | Tripping for FwRv transitions in the fast tripping area enabled or disabled. |
| TRDelFwRv | On, Off | Off | - | Tripping for FwRv transitions in the delayed tripping area enabled or disabled. |
| TRRvFw | On, Off | Off | - | Trip for RvFw transitions enabled or disabled. |
| TRIncRvFw | On, Off | Off | - | Trip for RvFw transitions in incoming mode enabled or disabled. |
| TROutRvFw | On, Off | Off | - | Trip for RvFw transitions in outgoing mode enabled or disabled. |
| TRFastRvFw | On, Off | Off | - | Tripping for RvFw transitions in the fast tripping area enabled or disabled. |

| Parameter | Range | Default | Unit | Description |
|---|---|---|---|---|
| TRDelRvFw | On, Off | Off | - | Tripping for RvFw transitions in the delayed tripping area enabled or disabled. |
| nFastFwRv | 0-10<br>Step: 1 | 0 | slip | Number of slips from forward to reverse direction required to be detected in the fast tripping area to cause the tripping command. |
| nDelFwRv | 0-10<br>Step: 1 | 0 | slip | Number of slips from forward to reverse direction required to be detected in the delayed tripping area to cause the tripping command. |
| nFastRvFw | 0-10<br>Step: 1 | 0 | slip | Number of slips from reverse to forward direction required to be detected in the fast tripping area to cause the tripping command. |
| nDelRvFw | 0-10<br>Step: 1 | 0 | slip | Number of slips from reverse to forward direction required to be detected in the delayed tripping area to cause the tripping command. |

## 1.7 Technical data

**Table 285: PSP - Pole slip protection function**

| Function | Value |
|---|---|
| Reactive and resistive reach for all setting parameters at $I_r$=1 A (for $I_r$ = 5 A, divide values by 5) | 0.10-400.00 ohm/phase in steps of 0.01ohm/phase |
| Timers | 0.000-60.000s in steps of 0.001s |
| Counters | 0-10 in steps of 1 |
| Reset ratio | 105% typically |

# 2 Low active power protection (LAPP)

## 2.1 Application

The low active power protection function (LAPP) can be used wherever a “low active power” signal is needed. The main application is as a local criterion to increase security when transfer trips are used.

In many power systems transfer trips are used, i.e. a trip criterion in one substation will be transferred to an adjacent substation via some sort of communication system. For such solutions there is always a risk that a false transfer trip signal is generated in the communication system and causes an unwanted trip. In order to prevent such a scenario a local criterion can be added in the substation where the trip is intended to take place. Such a local criterion could be low active power on a line, which, in a correct sequence, is disconnected in the remote end.

## 2.2 Functionality

The low active power function measures the active power separately in each phase. It also determines whether the power flow is towards or from the relay point as long as the measured current and voltage are higher than the minimum operating values. The operation becomes automatically non-directional, if the measured current decreases under the minimum value and the measured voltage remains higher.

Two operating levels are setable independent of each other regarding their operating values, directionality and time delay. It is possible to use their start and trip signals within the configuration of the terminal.

## 2.3 Function block

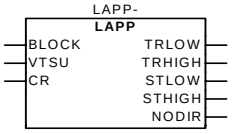


xx00000610.vsd

## 2.4 Logic diagram

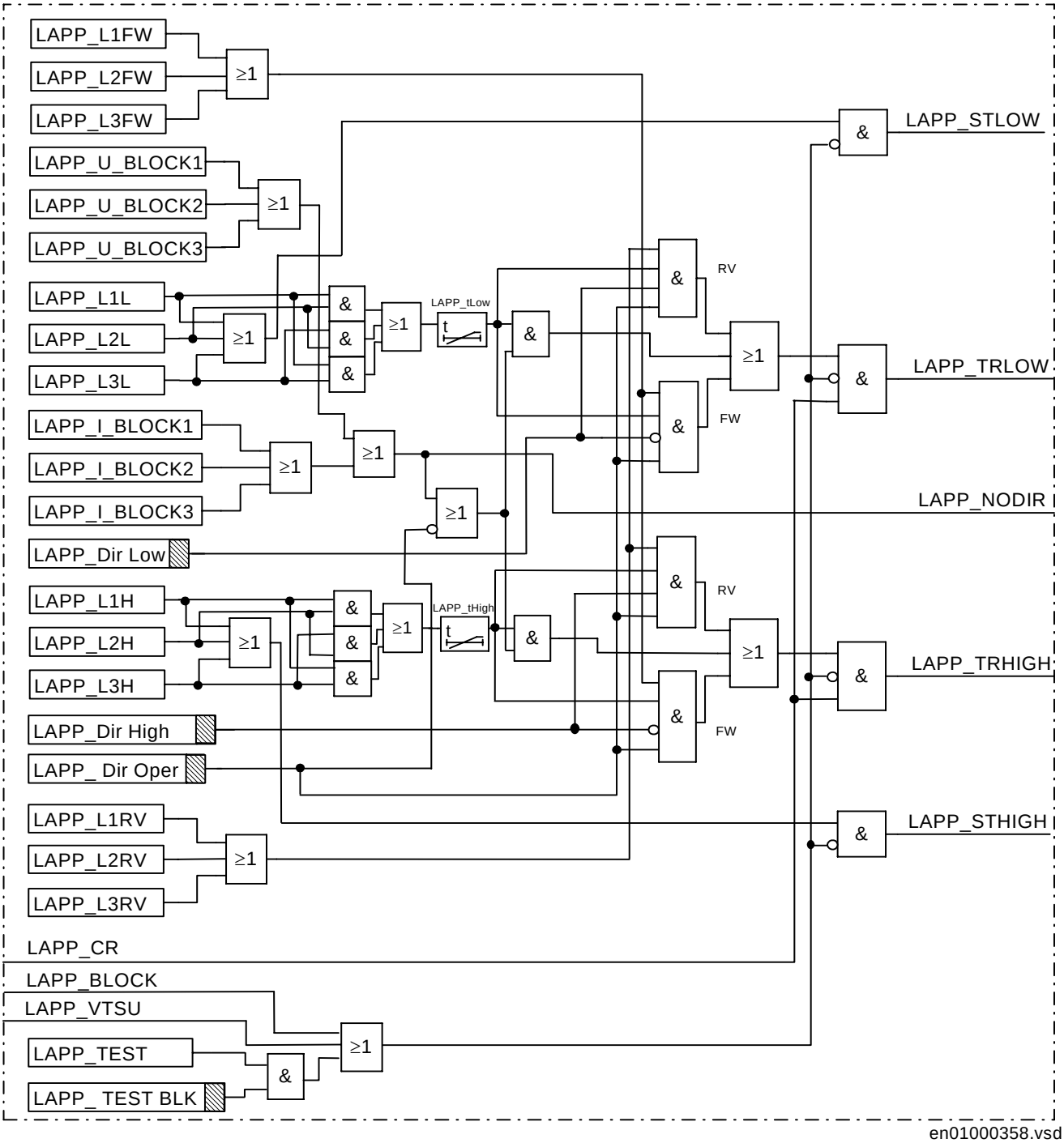

*Figure 128: LAPP logic*

## 2.5 Input and output signals

**Table 286: Input signals for LAPP (LAPP-) function block**

| Signal | Description |
|---|---|
| BLOCK | Block of low active power protection |
| VTSU | Block of LAPP function by voltage circuit supervision |
| CR | Received signal from communication channel logic |

Path in local HMI: ServiceReport/Functions/SystemProtec/LowActivePP/FuncOutputs

**Table 287: Output signals for LAPP (LAPP-) function block**

| Signal | Description |
|---|---|
| TRLOW | Low-set trip by low active power protection |
| TRHIGH | High-set trip by low active power protection |
| STLOW | Low-set start by low active power protection |
| STHIGH | High-set start by low active power protection |

## 2.6 Setting parameters

Path in local HMI-tree: Settings/Functions/SystemProtec/LowActivePP

**Table 288: Setting parameters for the low active power protection function**

| Parameter | Range | Default | Unit | Description |
|---|---|---|---|---|
| Operation | On/Off | Off | - | Operation low active power protection function, Off/On |
| DirOper | On/Off | Off | - | Directional operation of low active power protection |
| DirLow | Forward / Reverse | Forward | - | Direction of low active power protection, low-set |
| DirHigh | Forward / Reverse | Forward | - | Direction of low active power protection, high-set |
| PLow< | 3.0 - 100.00 Step: 0.1 | 10.0 | % of $S_b$ | Low-set limit of low active power |
| PHigh< | 3.0 - 100.0 Step: 0.1 | 20.0 | % of $S_b$ | High-set limit of low active power |
| tLow | 0.000 - 60.000 Step: 0.001 | 0.000 | s | Time delayed operation of low-set step |
| tHigh | 0.000 - 60.000 Step: 0.001 | 0.000 | s | Time delayed operation of high-set step |

## 2.7 Technical data

**Table 289: LAPP - Low active power protection function**

| Function | Setting range | Accuracy |
|---|---|---|
| Power function P< | (3.0 - 100.0) % of $S_b$ in steps of 0.1 % | ± 5 % of $S_r$ |
| Time delay | ( 0.000 - 60.000 ) s in steps of 1 ms | ± 0.5 % ± 10 ms |
| Minimum operating current for directional measurement: 5% of $I_r$ | | |
| Minimum operating voltage for directional measurement: 10% of $U_r$ | | |

# 3 Low active and reactive power protection (LARP)

## 3.1 Application

The combined low active and reactive power protection function (LARP) can be used wherever a “low reactive power” signal is needed. The main application is as a local criterion to increase security when transfer trips are used. The design gives the user a possibility to increase the sensitivity for high levels of active power. The tripping criterion is a function of the set value and the actual active power according to:

$$Q_{trip} = Q_{set} + \alpha \cdot |P|$$

(Equation 1)

where:
$0 \le \alpha \le 1$

In many power systems transfer trips are used, i.e. a trip criterion in one substation will be transferred to an adjacent substation via some sort of communication system. For such solutions there is always a risk that a false transfer trip signal is generated in the communication system and causes an unwanted trip. In order to prevent such a scenario a local criterion can be added in the substation where the trip is intended to take place. Such a local criterion could be low reactive power on a line, which, in a correct sequence, is disconnected in the remote end.

## 3.2 Functionality

The low active and reactive power function measures the active and the reactive power separately in each phase. It also determines whether the power flow is towards or from the relay point as long as the measured current and voltage are higher than the minimum operating values. The operation becomes automatically nondirectional, if the measured current decreases under the minimum value and the measured voltage remains higher.

Two operating levels are settable independent of each other regarding their operating values, directionality and time delay. It is possible to use their start and trip signals within the configuration of a terminal.

## 3.3 Function block

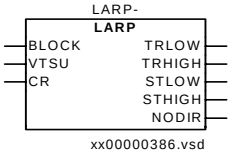

## 3.4 Logic diagram

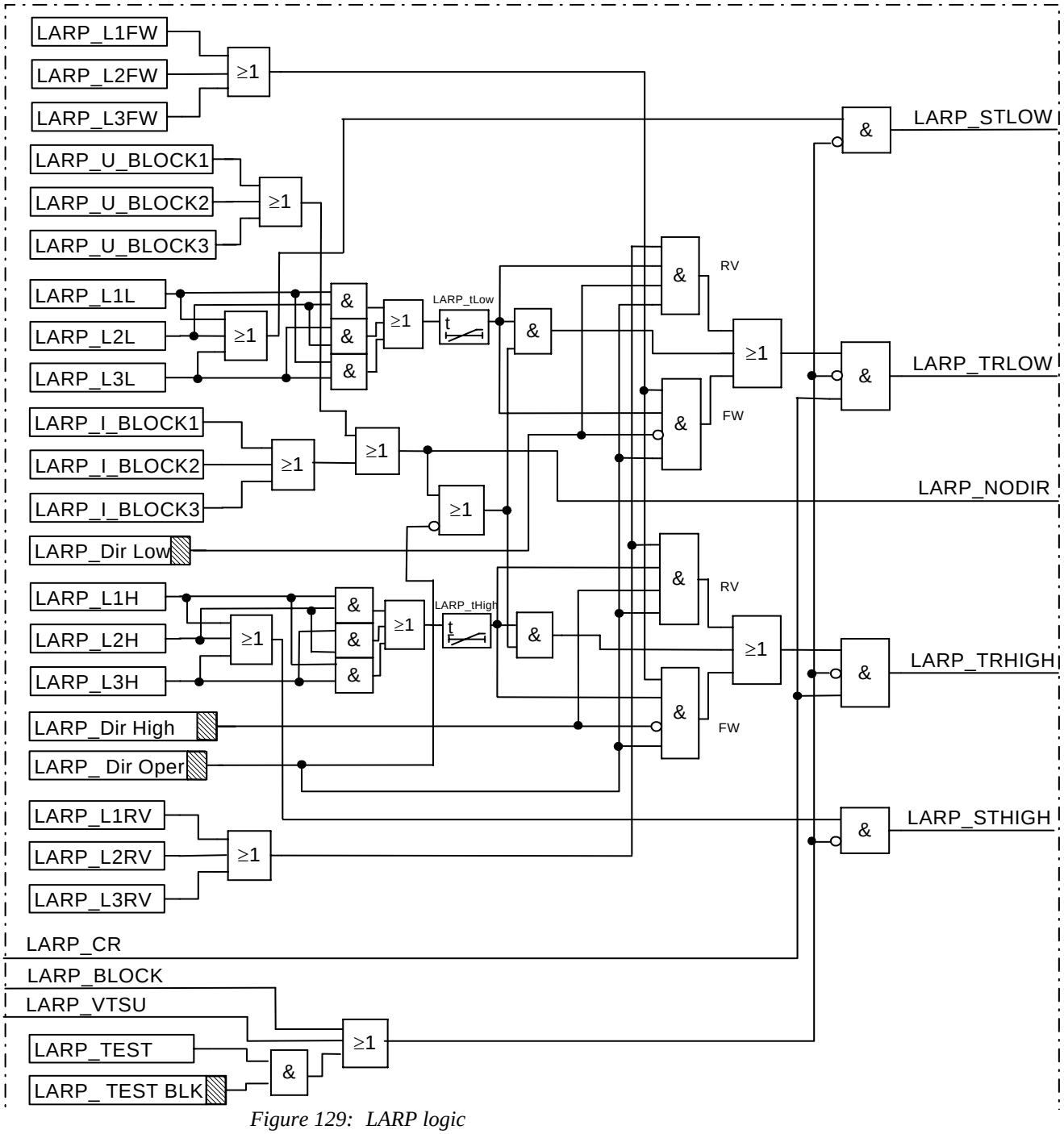


*Figure 129: LARP logic*

## 3.5 Input and output signals

**Table 290: Input signals for the LARP (LARP-) function block**

| Signal | Description |
|---|---|
| BLOCK | Block of combined low active and reactive power P |
| VTSU | Block of LARP function by voltage circuit supervision |
| CR | Received signal from communication channel logic |

Path in local HMI: ServiceReport/Functions/SystemProtec/LowActiveRP/FuncOutputs

**Table 291: Output signals for the LARP (LARP-) function block**

| Signal | Description |
|---|---|
| TRLOW | Low-set trip by combined low active and reactive power P |
| TRHIGH | High-set trip by combined low active and reactive power P |
| STLOW | Low-set start by combined low active and reactive power P |
| STHIGH | High-set start by combined low active and reactive power P |

## 3.6 Setting parameters

Path in local HMI-tree: Settings/Functions/SystemProtec/LowActivRP

**Table 292: Setting parameters for the low active and reactive power protection**

| Parameter | Range | Default | Unit | Description |
|---|---|---|---|---|
| Operation | On/Off | Off | - | Operation combined low active and reactive power protection function, Off/On |
| DirOper | On/Off | Off | - | Direction operation of combined low active and reactive power protection |
| DirLow | Forward / Reverse | Forward | - | Direction of combined low active and reactive power protection , low-set |
| DirLow | Forward / Reverse | Forward | - | Direction of combined low active and reactive power protection , high-set |
| QLow< | 3.0 - 100.0 Step: 0.1 | 10.0 | % of $S_b$ | Low-set limit of reactive power |
| QHigh< | 3.0 - 100.0 Step: 0.1 | 20.0 | % of $S_b$ | High-set limit of reactive power |

| Parameter | Range | Default | Unit | Description |
|---|---|---|---|---|
| QLow< | 3.0-100.0<br>Step: 0.1 | 10.0 | % of $S_b$ | Low-set limit of reactive power |
| QHigh< | 3.0-100.0<br>Step: 0.1 | 20.0 | % of $S_b$ | High-set limit of reactive power |
| k | 0.0 - 45.0 Step: 0.1 | 0.0 | deg | Declination angle of operating characteristic |
| tLow | 0.000 - 60.000<br>Step: 0.001 | 0.000 | s | Time delayed operation of low-set step |
| tHigh | 0.000 - 60.000<br>Step: 0.001 | 0.000 | s | Time delayed operation of high-set step |

## 3.7 Technical data

**Table 293: LARP - Low active and reactive power protection function**

| Function | Setting range | Accuracy |
|---|---|---|
| Power function Q< | (3.0 - 100.0) % of $S_b$ in steps of 0.1 % | ± 5 % of $S_r$ |
| Time delay | (0.000 - 60.000) s in steps of 1 ms | ± 0.5 % ± 10 ms |
| Minimum operating current for directional measurement: 5% of $I_r$ | | |
| Minimum operating voltage for directional measurement: 10% of $U_r$ | | |

# 4 High active power protection (HAPP)

## 4.1 Application

The high active power protection function (HAPP) can be used wherever a high active power signal is needed.

There are a number of applications for the high active power protection, wherever active power flow has to be limited or certain actions have to be taken when the active power exceeds specific values.

One example is to arm system protection schemes based on high active power transfer. Suppose that the transmission corridor, in figure 130, can transfer 500 MW on each line. With all four lines in operation, the generation shedding system, triggered by line trip, has to be armed at a transfer of 1500 MW. If one line is tripped, or out of service, and the transmission exceeds 1000 MW, the generation shedding has to be armed.

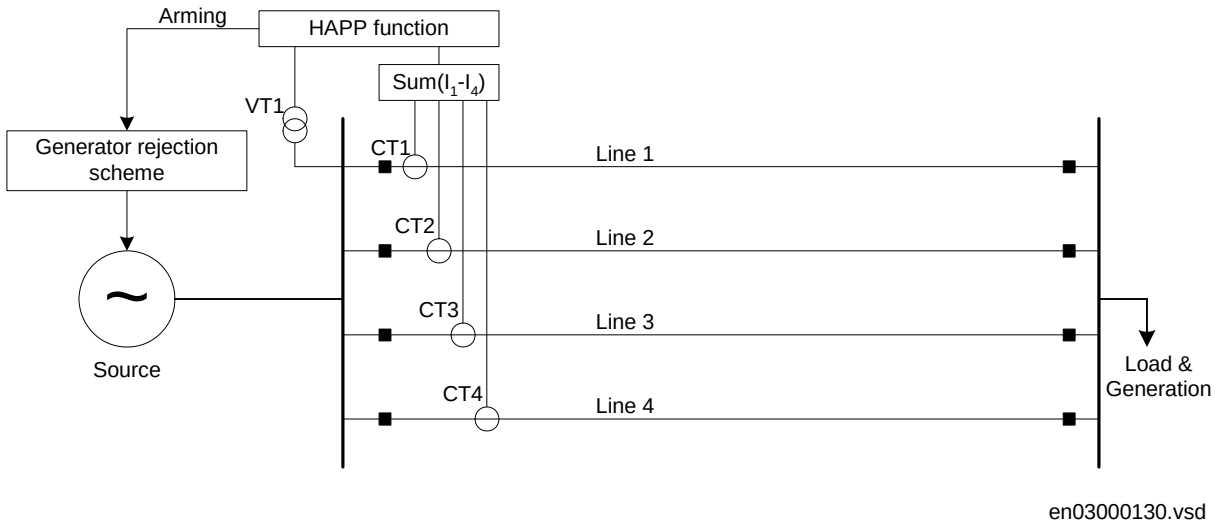


*Figure 130: Generation shedding system armed by high active power.*

## 4.2 Functionality

The high active power function measures the active power separately in each phase. It also determines whether the power flow is towards or from the relay point as long as the measured current and voltage are higher than the minimum operating values.

Two operating levels are setable independent of each other regarding their operating values, directionality and time delay. It is possible to use their start and trip signals within the configuration of the terminal.

## 4.3 Function block

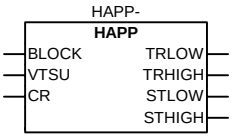


xx00000611.vsd

## 4.4 Logic diagram

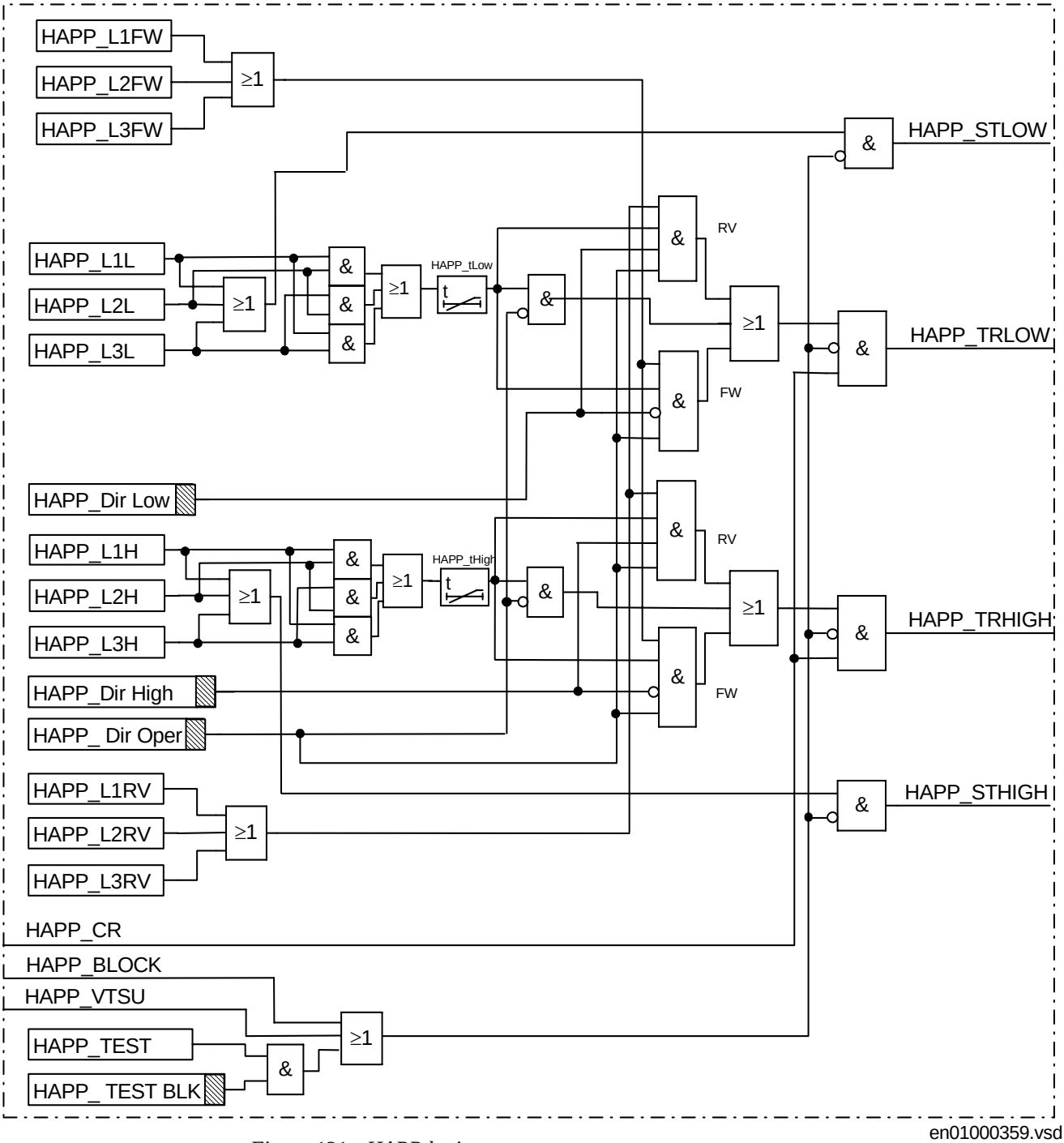


*Figure 131: HAPP logic*

## 4.5 Input and output signals

**Table 294: Input signals for the HAPP (HAPP-) function block**

| Signal | Description |
|---|---|
| BLOCK | Block of high active power protection |
| VTSU | Block of high active P by voltage circuit supervision |
| CR | Received signal from communication channel logic |

Path in local HMI: ServiceReport/Functions/SystemProtec/HighActivePP/FuncOutputs

**Table 295: Output signals for the HAPP (HAPP-) function block**

| Signal | Description |
|---|---|
| TRLOW | Low-set trip by high active power protection |
| TRHIGH | High-set trip by high active power protection |
| STLOW | Low-set start by high active power protection |
| STHIGH | High-set start by high active power protection |

## 4.6 Setting parameters

Path in the local HMI-tree: Settings/Functions/SystemProtec/HighActivePP

**Table 296: Settings for the HAPP (HAPP-) function block**

| Parameter | Range | Default | Unit | Description |
|---|---|---|---|---|
| Operation | On/Off | Off | - | Operation high active power protection function, Off/On |
| DirOper | On/Off | Off | - | Direction operation of high active power protection |
| DirLow | Forward / Reverse | Forward | - | Direction of high active power protection, low-set |
| DirHigh | Forward / Reverse | Forward | - | Direction of high active power protection, high-set |
| Plow> | 3.0 - 200.0 Step: 0.1 | 110.0 | % of $S_b$ | Low-set limit of high active power |
| PHigh> | 3.0 -200.0 Step: 0.1 | 120.0 | % of $S_b$ | High-set limit of high active power |
| tLow | 0.000 - 60.000 Step: 0.001 | 0.000 | s | Time delayed operation of low-set step |
| tHigh | 0.000 - 60.000 Step: 0.001 | 0.000 | s | Time delayed operation of high-set step |

## 4.7 Technical data

**Table 297: HAPP - High active power protection function**

| Function | Value | Accuracy |
|---|---|---|
| Power function P> | (3.0 - 200.0) % of $S_b$ in steps of 0.1 % | ± 5 % of $S_r$ |
| Time delay | (0.000 - 60.000) s in steps of 1 ms | ± 0.5 % ± 10 ms |
| Minimum operating current for directional measurement: 5% of $I_r$ | | |
| Minimum operating voltage for directional measurement: 10% of $U_r$ | | |
| Reset ratio | > 90% typically | |

# 5 High active and reactive power protection (HARP)

## 5.1 Application

The combined high active and reactive power protection function (HARP) can be used wherever a “high reactive power” signal is needed. The design gives the user a possibility to increase the sensitivity for high levels of active power. The tripping criterion is a function of the set value and the actual active power according to:

$$Q_{trip} = Q_{set} + \alpha \cdot |P|$$

(Equation 2)

where:
$0 \le \alpha \le 1$

Typically, high reactive power output from generators, connected to transmission grids, is used as an important signal in system protection schemes to counteract voltage instability.

## 5.2 Functionality

The high active and reactive power function measures the active and the reactive power separately in each phase. It also determines whether the power flow is towards or from the relay point as long as the measured current and voltage are higher than the minimum operating values.

The operational characteristic is according to:

Q>Qset+tan(k)*abs(P).

Two operating levels are settable independent of each other regarding their operating values, directionality and time delay. It is possible to use their start and trip signals within the configuration of a terminal.

## 5.3 Function block

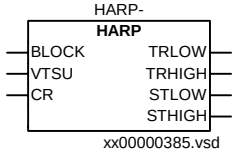

## 5.4 Logic diagram

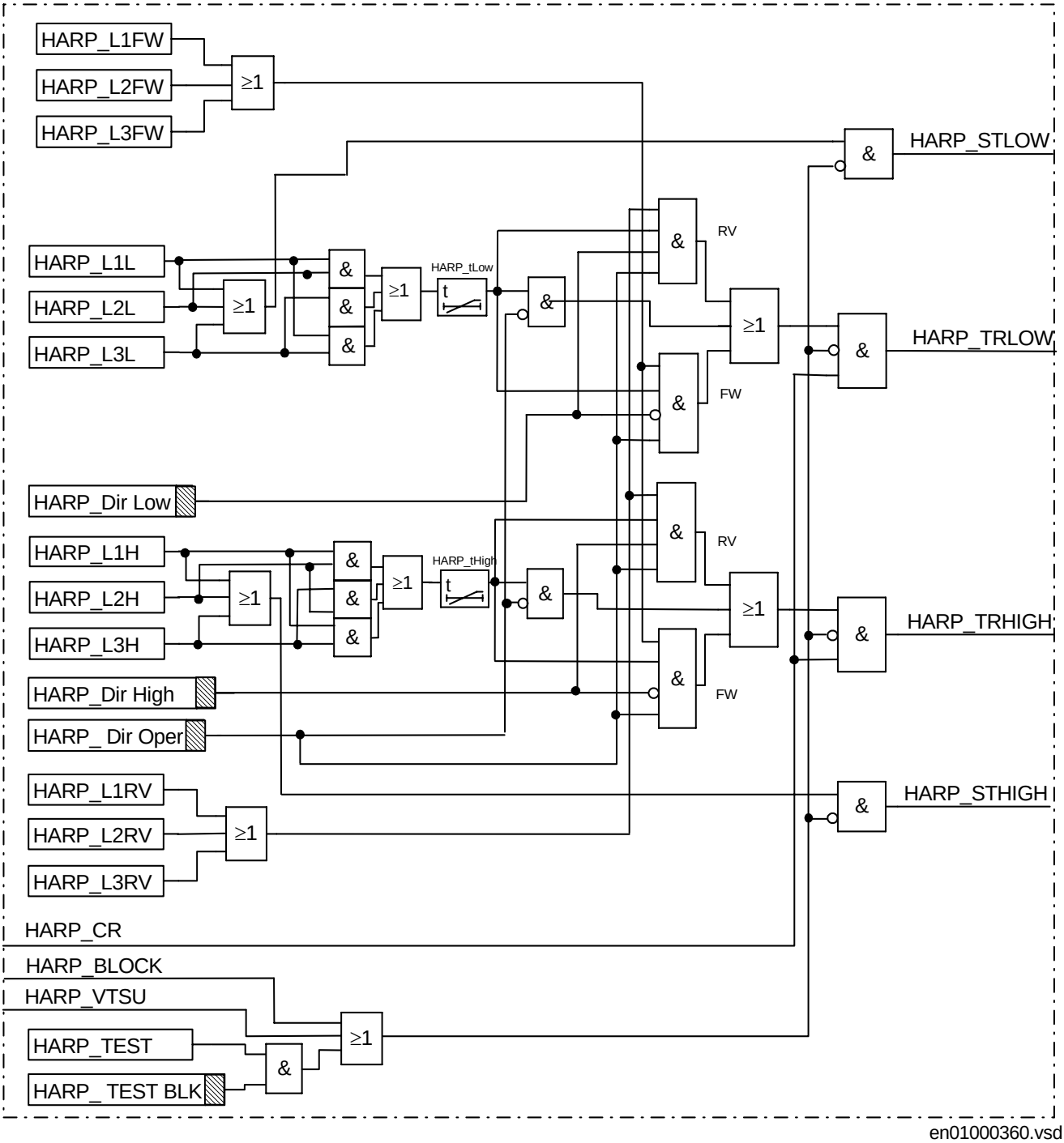


en01000360.vsd

*Figure 132: HARP logic*

## 5.5 Input and output signals

**Table 298: Input signals for the HARP (HARP-) function block**

| Signal | Description |
|---|---|
| BLOCK | Block of combined high active and reactive power protection |
| VTSU | Block of HARP function by voltage circuit supervision |
| CR | Received signal from communication channel logic |

## 5.6 Setting parameters

Path in local HMI-tree: Settings/Functions/SystemProtec/HIghActivRP

**Table 299: Settings for the high active and reactive power protection function**

| Parameter | Range | Default | Unit | Description |
|---|---|---|---|---|
| Operation | On/Off | | - | Operation combined high active and reactive power protection function, Off/On |
| DirOper | On/Off | Off | - | Direction of operation of combined high active and reactive power protection |
| DirLow | Forward / Reverse | Forward | - | Direction of combined high reactive and active power protection, low-set |
| DirHigh | Forward / Reverse | Forward | - | Direction of combined high reactive and active power protection, high-set |
| QLow> | 3.0 - 200.0 Step: 0.1 | 110.0 | % of $S_b$ | Low-set limit of reacive power |
| QHigh> | 3.0 - 200.0 Step: 0.1 | 120.0 | % of $S_b$ | High-set limit of reactive power |
| QLow | 3.0-200.0 Step: 0.1 | 110.0 | % of $S_b$ | Low-set limit of reactive power |
| k | 0.0 - 45.0 Step: 0.1 | 0.0 | deg | Declination angle of operationg characteristic |
| tLow | 0.000 - 60.000 Step: 0.001 | 0.000 | s | Time delayed operation of low-set step |
| tHigh | 0.000 - 60.000 Step: 0.001 | 0.000 | s | Time delayed operation of high-set step |

## 5.7 Technical data

**Table 300: HARP - High active and reactive power protection function**

| Function | Value | Accuracy |
|---|---|---|
| Power function Q> | (3.0 - 200.0) % of $S_b$ in steps of 0.1 % | ± 5 % of $S_r$ |
| Time delay | (0.000 - 60.000) s in steps of 1 ms | ± 0.5 % ± 10 ms |
| Minimum operating current for directional measurement: 5% of $I_r$ | | |
| Minimum operating voltage for directional measurement: 10% of $U_r$ | | |
| Reset ratio | > 90% | |

# 6 Sudden change in phase current protection function (SCC1)

## 6.1 Application

The sudden change in current protection function (SCC1) can be used wherever a sudden change in current can be used to improve the overall functionality of the protection system. The main application is as a local criterion to increase security when transfer trips are used.

In many power systems transfer trips are used, i.e. a trip criterion in one substation will be transferred to an adjacent substation via some sort of communication system. For such solutions there is always a risk that a false transfer trip signal is generated in the communication system and causes an unwanted trip. In order to prevent such a scenario a local criterion can be added in the substation where the trip is intended to take place. Such a local criterion could be a sudden change in current on a line, which, in a correct sequence, is disconnected in the remote end.

## 6.2 Functionality

The amplitude of the difference between the magnitudes of two consecutive cycles is derived by means of the fourier coefficients of the fundamental signal.

The integration time is one power system cycle.

The change in current is compared to a setting value to create the start and, after a time delay, the trip signal.

## 6.3 Function block

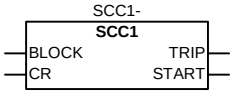

xx00000612.vsd

## 6.4 Logic diagram

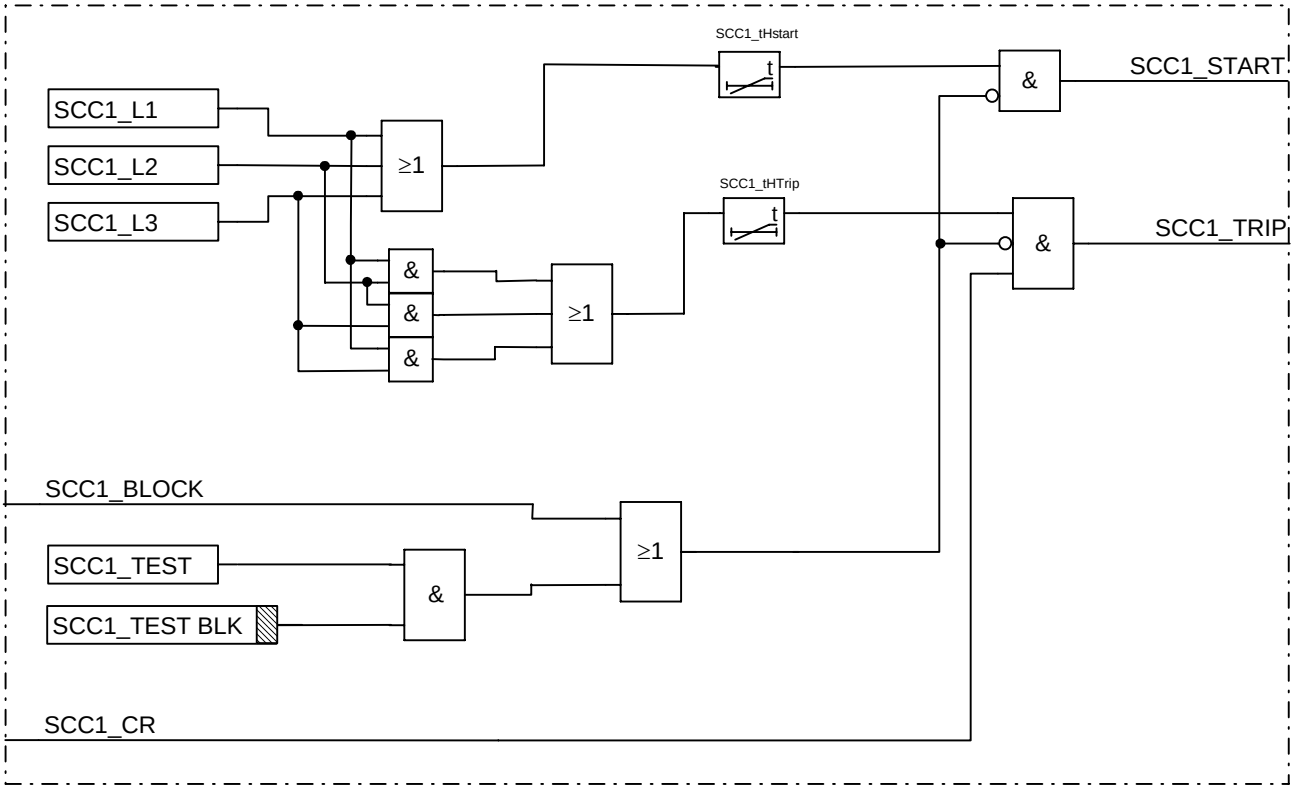


*Figure 133: SCC1 logic*

## 6.5 Input and output signals

**Table 301: Input signals for the SCC1 (SCC1-) function block**

| Signal | Description |
|---|---|
| BLOCK | Block of sudden change in current |
| CR | Received signal from communication channel logic |

Path in local HMI: ServiceReport/Functions/SystemProtec/SuddenChangeC/FuncOutputs

**Table 302: Output signals for the SCC1 (SCC1-) function block**

| Signal | Description |
|---|---|
| TRIP | Trip by sudden change in function |
| START | Start by sudden change in current |

## 6.6 Setting parameters

Path in local HMI-tree: Settings/Functions/SystemProtec/SuddenChangeC

**Table 303: Settings for the sudden change in phase current protection SCC1 (SCCn-) function**

| Parameter | Range | Default | Unit | Description |
|---|---|---|---|---|
| Operation | On/Off | Off | - | Operation sudden change in current function, Off/On |
| DIL> | 20 - 100.0<br>Step: 0.1 | 30.0 | % of $I_b$ | Change in current limit |
| tHStart | 0.000 - 60.000<br>Step: 0.001 | 0.000 | s | Hold timer for start signal |
| tHTrip | 0.000 - 60.000<br>Step: 0.001 | 0.000 | s | Hold timer for trip signal |

## 6.7 Technical data

**Table 304: SCC1 - Sudden change in phase current function**

| Parameter | Setting range | Accuracy |
|---|---|---|
| Change in current per power system cycle, DIL> | 20.0-100.0% of Ib in steps of 0.1% | ± 5.0 % of $I_r$ |
| Time delay for start signal, tHStart | 0.000-60.000 s in steps of 1 ms | ± 0.5 % ± 10 ms |
| Time delay for trip signal, tHTrip | 0.000-60.000 s in steps of 1 ms | ± 0.5 % ± 10 ms |

# 7 Sudden change in residual current protection function (SCRC)

## 7.1 Application

The sudden change in residual current protection function (SCRC) can be used wherever a sudden change in residual current can be used to improve the overall functionality of the protection system. The main application is as a local criterion to increase security when transfer trips are used.

Whenever an earth-fault occurs, or a circuit-breaker get stuck in one phase, a residual current appears, that can be used to increase the security of transfer trip arrangements.

## 7.2 Functionality

The amplitude of the difference between the magnitudes of two consecutive cycles is derived by means of the fourier coefficients of the fundamental signal.

The integration time is one power system cycle.

The change in residual current is compared to a setting value to create the start and, after a time delay, the trip signal.

## 7.3 Function block

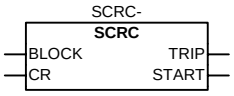


xx00000613.vsd

## 7.4 Logic diagram

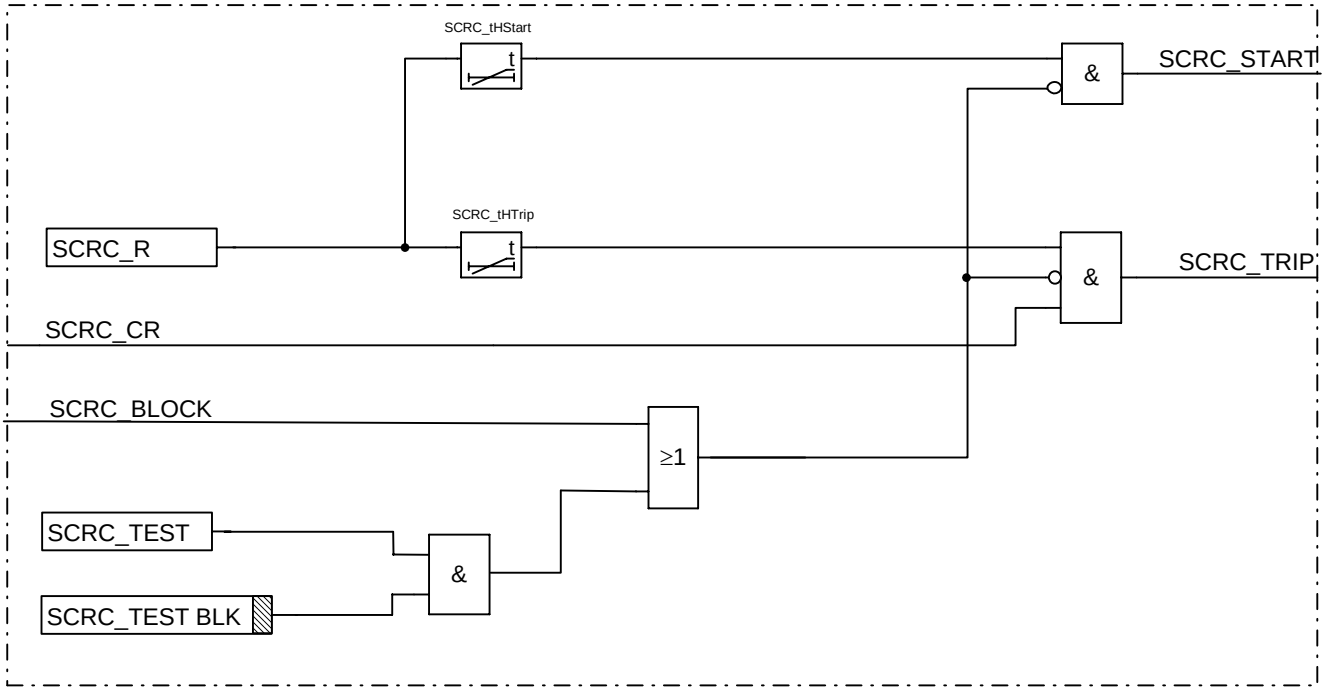


*Figure 134: SCRC logic*

## 7.5 Input and output signals

**Table 305: Input signals for the SCRC (SCRC-) function block**

| Signal | Description |
|---|---|
| BLOCK | Block of sudden change in residual current |
| CR | Received signal from communication channel logic |

Path in local HMI: ServiceReport/Functions/SystemProtec/SuddenChangeRC/FuncOutputs

**Table 306: Output signals for the SCRC (SCRC-) function block**

| Signal | Description |
|---|---|
| TRIP | Trip by sudden change in residual current |
| START | Start by sudden change in residual current |

## 7.6 Setting parameters

Path in local HMI-tree: Settings/Functions/SystemProtec/SuddenChangeRC

**Table 307: Settings for the sudden change in residual protection SCRC (SCRC-) function**

| Parameter | Range | Default | Unit | Description |
|---|---|---|---|---|
| Operation | On/Off | Off | - | Operation sudden change in residual current function, Off/On |
| DIN> | 20.0 - 100.0 Step: 0.1 | 30.0 | % of $I_b$ | Change in residual current limit |
| tHStart | 0.000 - 60.000 Step: 0.001 | 0.000 | s | Hold timer for start signal |
| tHTrip | 0.000 - 60.000 Step: 0.001 | 0.000 | s | Hold timer for trip signal |
| IMeasured | I4, I5 Step: I5 | I4 | - | Current signal used in function |

## 7.7 Technical data

**Table 308: SCRC - Sudden change in residual current protection function**

| Function | Setting range | Accuracy |
|---|---|---|
| Change in residual current per power system cycle, DIN> | 20.0-100.0% of Ib in steps of 0.1% | ± 5.0% of $I_r$ |
| Time delay for start signal, tHStart | 0.000-60.000 s in steps of 1 ms | ± 0.5 % ± 10 ms |
| Time delay for trip signal, tHTrip | 0.000-60.000 s in steps of 1 ms | +± 0.5 % ± 10 ms |

# 8 Sudden change in voltage protection function (SCV)

## 8.1 Application

The sudden change in voltage protection function (SCV) can be used wherever a sudden change in voltage can be used to improve the overall functionality of the protection system.

One application is as a local criterion to increase security when transfer trips are used. Another application is to recognize network topology changes that cause sudden changes in voltage. Also faults, tap-changer operations, shunt device switching, etc., cause sudden changes in voltage that can be captured by the SCV function.

## 8.2 Functionality

The amplitude of the difference between the magnitudes of two consecutive cycles is derived by means of the fourier coefficients of the fundamental signal.

The integration time is one power system cycle.

The change in voltage is compared to a setting value to create a start signal and, after a time delay, a trip signal.

## 8.3 Function block

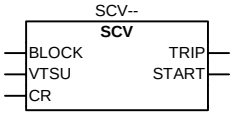


xx00000614.vsd

## 8.4 Logic diagram

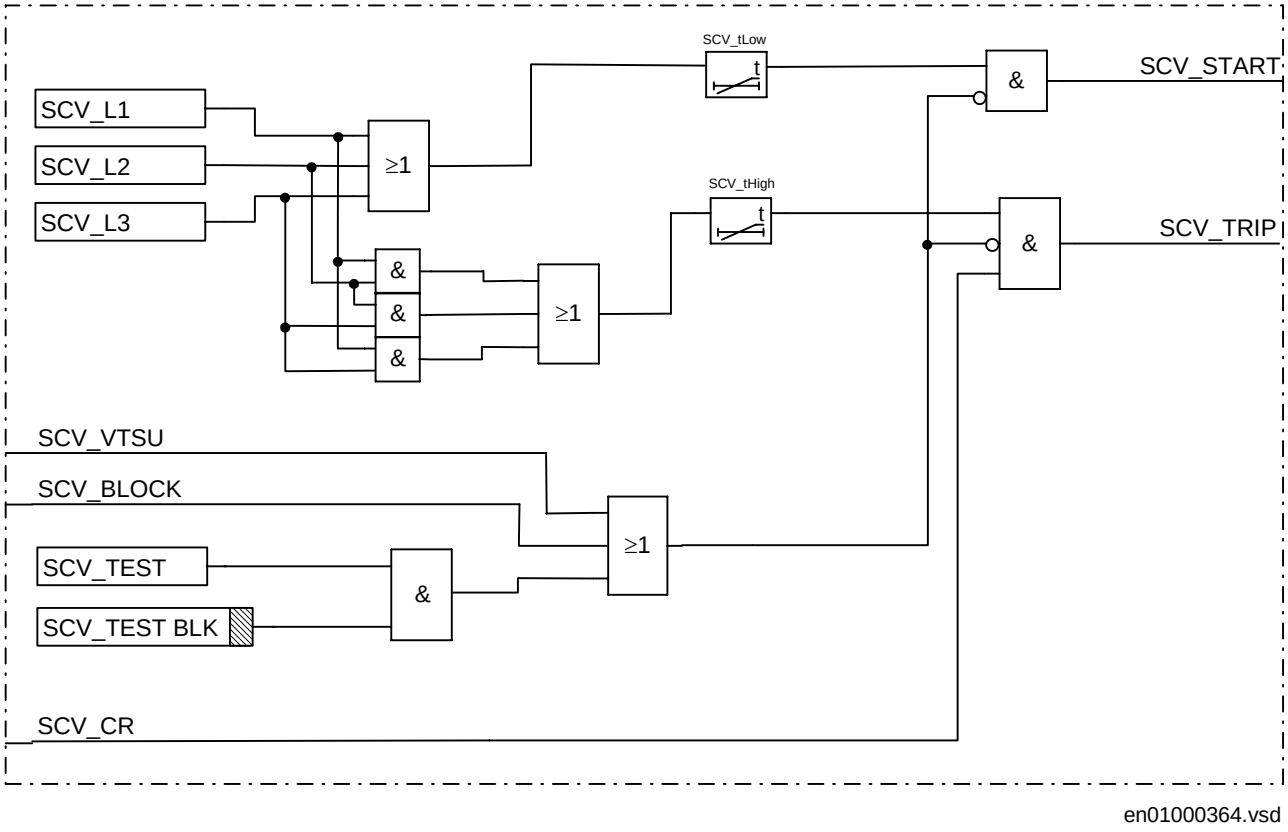


*Figure 135: SCV logic*

## 8.5 Input and output signals

**Table 309: Input signals for the SCV (SCV--) function block**

| Signal | Description |
|---|---|
| BLOCK | Block of sudden change in voltage |
| VTSU | Block of sudden change in V by voltage circuit supervision |
| CR | Received signal from communication channel logic |

Path in local HMI: ServiceReport/Functions/SystemProtec/SuddenChangeV/FuncOutputs

**Table 310: Output signals for the SCV (SCV--) function block**

| Signal | Description |
|---|---|
| TRIP | Trip by sudden change in voltage |
| START | Start by sudden change in voltage |

## 8.6 Setting parameters

Path in local HMI-tree: Settings/Functions/SystemsProtec/SuddenChangeV

**Table 311: Settings for the sudden change in voltage protection SCV (SCV--)**

| Parameter | Range | Default | Unit | Description |
|---|---|---|---|---|
| Operation | On/Off | Off | - | Operation sudden change in voltage function, Off/On |
| DUL> | 5.0 - 100.0<br>Step:0.1 | 20.0 | % of $U_b$ | Change in voltage limit |
| tHStart | 0.000 - 60.000<br>Step: 0.001 | 0.000 | s | Hold timer for start signal |
| tHTrip | 0.000 - 60.000<br>Step: 0.001 | 0.000 | s | Hold timer for trip signal |

## 8.7 Technical data

**Table 312: SCV - Sudden change in voltage protection function**

| Function | Setting range | Accuracy |
|---|---|---|
| Change in voltage per power system cycle, DUL> | 5.0-100.0% of Ub in steps of 0.1% | ± 0.5 % of $U_r$ |
| Time delay for start signal, tHStart | 0.000-60.000 s in steps of 1 ms | ± 0.5 % ± 10 ms |
| Time delay for trip signal, tHTrip | 0.000-60.000 s in steps of 1 ms | ± 0.5 % ± 10 ms |

# 9 Overvoltage protection (OVP)

## 9.1 Application

The overvoltage protection function (OVP) can be used wherever a "high voltage" signal is needed. The function can be used for applications where a high voltage is the result of an event that has to be indicated, or actions to reduce the time with high voltage levels are required.

One application example is to take actions to quickly reduce high voltage levels by switching out shunt capacitors or switching in shunt reactors, in case of a long transmission connected in one end only.

## 9.2 Functionality

The overvoltage protection function (OVP) measures all three phase voltages on a protected power line. The measured voltage signals are extensively filtered, to secure high accuracy of the measurement. Each of two independent voltage measuring stages has its own, independently settable time delay.

The resetting ratio of the function is settable, to adjust the operation as much as possible to the expected system overvoltage conditions. This expecially when the big shunt reactors are used in the network to control the system overvoltages.

## 9.3 Function block

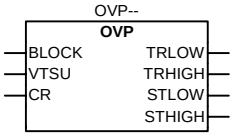


xx00000615.vsd

## 9.4 Logic diagram

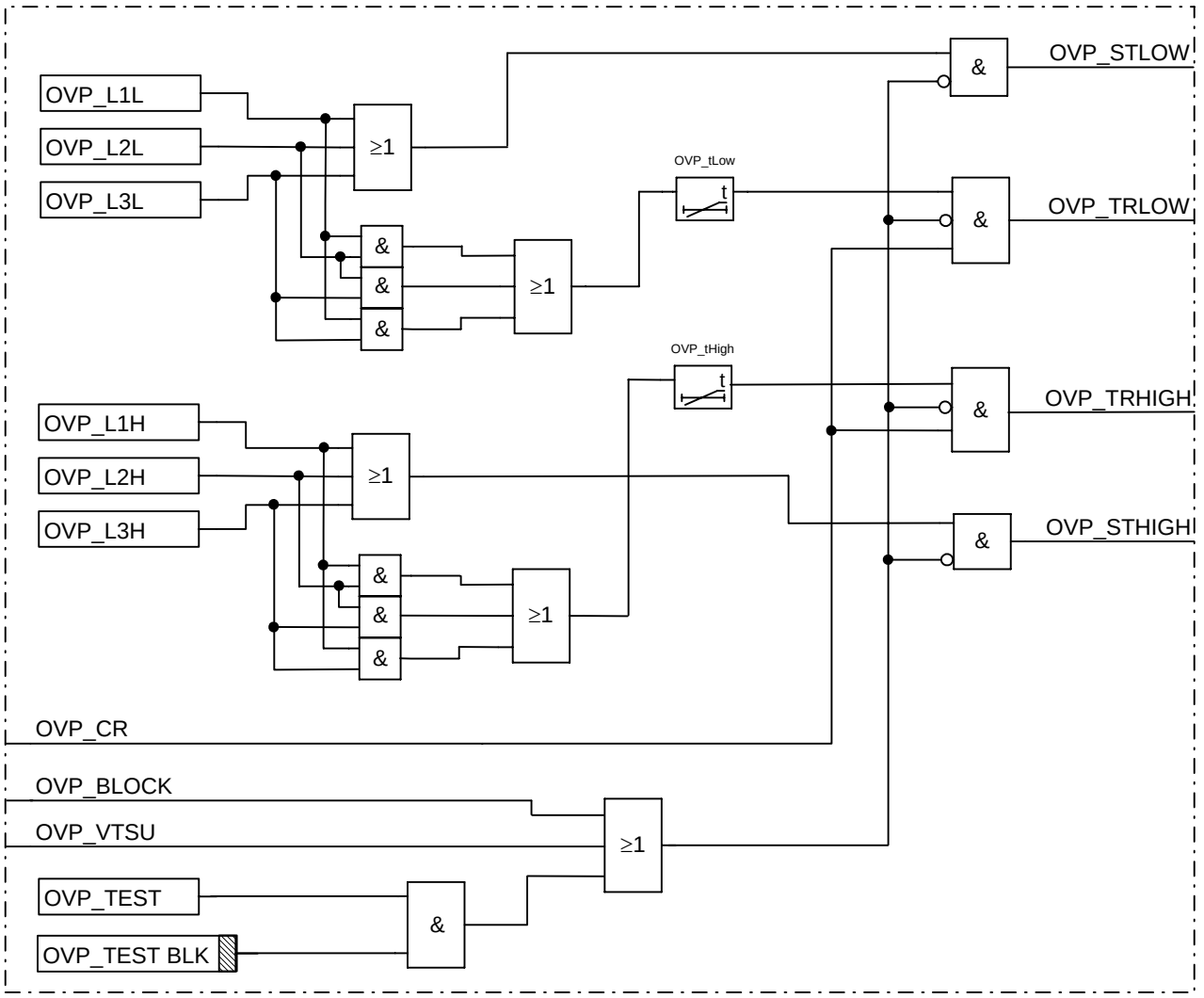


*Figure 136: OVP logic*

## 9.5 Input and output signals

**Table 313: Input signals for the OVP (OVP--) function block**

| Signal | Description |
|---|---|
| BLOCK | Block of overvoltage protection |
| VTSU | Block of overvoltage protection by voltage circuit supervision |
| CR | Received signal from communication channel logic |

Path in local HMI: ServiceReport/Functions/SystemProtec/OverVoltageP/FuncOutputs

**Table 314: Output signals for the OVP (OVP--) function block**

| Signal | Description |
|---|---|
| TRLOW | Low-set trip by overvoltage protection |
| TRHIGH | High-set trip by overvoltage protection |
| STLOW | Low-set start by overvoltage protection |
| STHIGH | High-set start by overvoltage protection |

## 9.6 Setting parameters

Path in local HMI-tree: Settings/Functions/SystemProtec/OverVoltageP

**Table 315: Settings for the accurate overvoltage protection OVP (OVP--) function**

| Parameter | Range | Default | Unit | Description |
|---|---|---|---|---|
| Operation | On/Off | Off | - | Operation overvoltage protection function, Off/on |
| ULLow> | 80.0 - 150.0 Step: 0.1 | 110.0 | % of $U_b$ | Low-set step of overvoltage limit |
| ULHigh> | 80.0 - 150.0 Step: 0.1 | 120.0 | % of $U_b$ | High-set step of overvoltage limit |
| tLow | 0.000 - 60.000 Step: 0.001 | 0.000 | s | Time delayed operation of low-set step |
| tHigh | 0.000 - 60.000 Step: 0.001 | 0.000 | s | Time delayed operation of high-set step |
| Hysteresis | 94.0 - 99.0 Step: 0.1 | 96.0 | % | Reset ratio of low and high-set step |

## 9.7 Technical data

**Table 316: OVP - Accurate overvoltage protection function**

| Function | Setting range | Accuracy |
|---|---|---|
| Low-set operating value, ULLow> | 80.0-150.0% of Ub in steps of 0.1% | ± 2.5 % of $U_r$ |
| High-set operating value, ULHigh> | 80.0-150.0% of Ub in steps of 0.1% | ± 2.5 % of $U_r$ |
| Time delayed operation of low-set step, tLow | 0.000-60.000 s in steps of 1 ms | ± 0.5 % ± 10 ms |
| Time delayed operation of high-set step, tHigh | 0.000-60.000 s in steps of 1 ms | ± 0.5 % ± 10 ms |

# 10 Accurate undercurrent protection function (UCP)

## 10.1 Application

The undercurrent protection function (UCP) can be used whenever a "low current" signal is needed. The main application is as a local criterion to increase security when transfer trips are used.

In many power systems transfer trips are used, i.e. a trip criterion in one substation will be transferred to an adjacent substation via some sort of communication system. For such solutions there is always a risk that a false transfer trip signal is generated in the communication system and causes an unwanted trip. In order to prevent such a scenario a local criterion can be added in the substation where the trip is intended to take place. Such a local criterion could be low current on a line, which, in a correct sequence, is disconnected in the remote end.

## 10.2 Functionality

When any phase current decreases under the setpoint value, a start signal is issued.

When a start signal is activated and the carrier received signal is true, a trip signal is issued after a settable time delay.

## 10.3 Function block

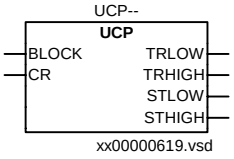

## 10.4 Logic diagram

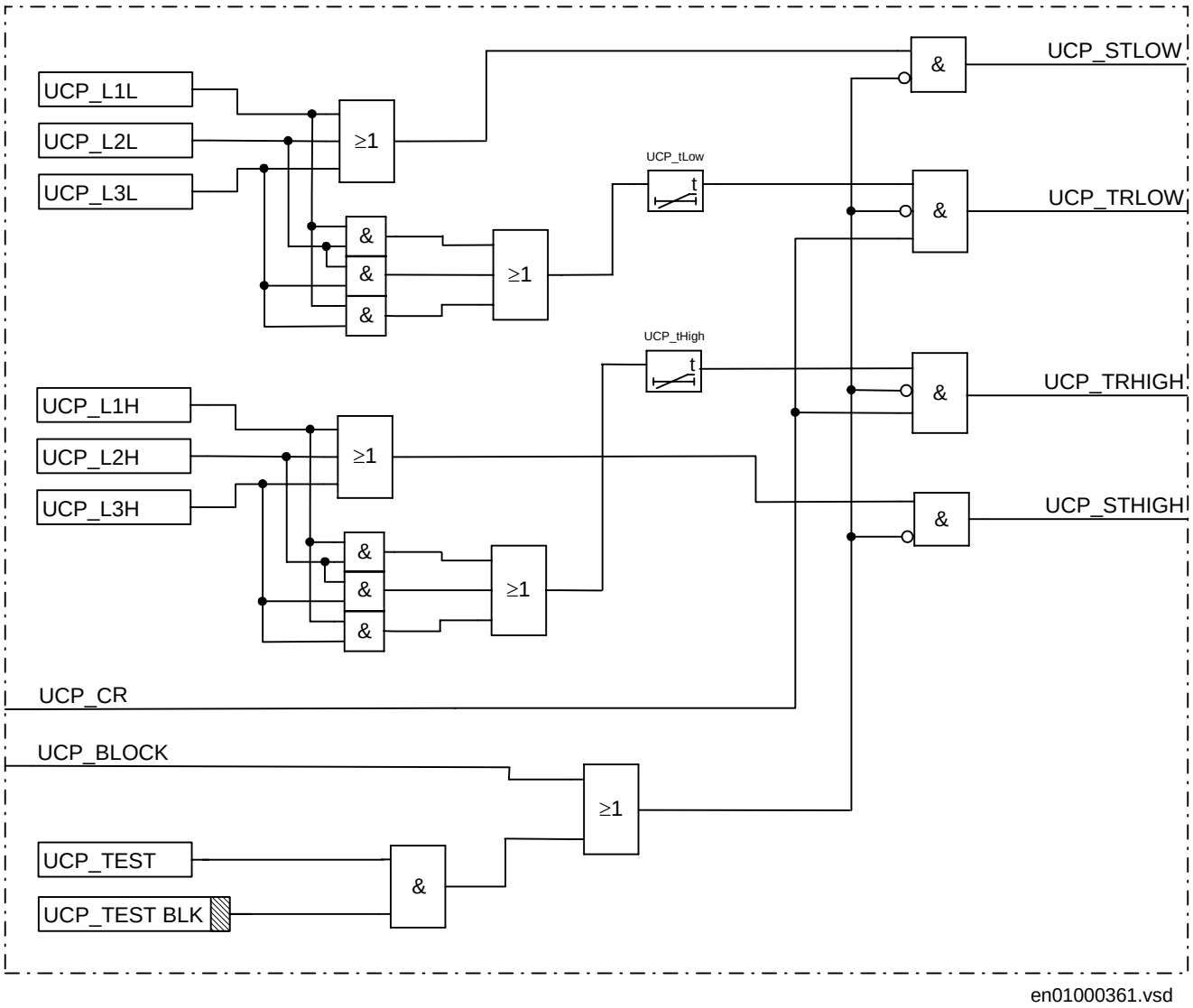


*Figure 137: UCP logic*

## 10.5 Input and output signals

**Table 317: Input signals for the UCP (UCP--) function block**

| Signal | Description |
|---|---|
| BLOCK | Block of undercurrent protection |
| CR | Received signal from communication channel logic |

Path in local HMI: ServiceReport/Functions/SystemProtec/UnderCurrentP/FuncOutputs

**Table 318: Output signals for the UCP (UCP--) function block**

| Signal | Description |
|---|---|
| TRLOW | Low-set trip by undercurrent protection |
| TRHIGH | High-set trip by undercurrent protection |
| STLOW | Low-set start by undercurrent protection |
| STHIGH | High-set start by undercurrent protection |

## 10.6 Setting parameters

Path in local HMI-tree: Settings/Functions/SystemProtec/UnderCurrentP

**Table 319: Settings for the accurate undercurrent protection UCP (UCP--) function**

| Parameter | Range | Default | Unit | Description |
|---|---|---|---|---|
| Operation | On/Off | Off | - | Operation undercurrent protection function, Off/On |
| ILLow< | 5.0 - 100.0 Step: 0.1 | 20.0 | % of $I_b$ | Low-set step of undercurrent limit |
| ILHigh< | 5.0 - 100.0 Step: 0.1 | 30.0 | % of $I_b$ | High-set step of undercurret limit |
| tLow | 0.000 - 60.000 Step: 0.001 | 0.000 | s | Time delayed operation of low-set step |
| tHigh | 0.000 - 60 000 Step: 0.001 | 0.000 | s | Time delayed operation of high-set step |

## 10.7 Technical data

**Table 320: UCP - Undercurrent protection function**

| Function | Setting range | Accuracy |
|---|---|---|
| Low-set step of undercurrent limit, ILLow< | 5.0-100.0% of Ib in steps of 0.1% | ± 2.5 % of $I_r$ |
| High-set step of undercurrent limit, ILHigh< | 5.0-100.0% of Ib in steps of 0.1% | ± 2.5 % of $I_r$ |
| Time delayed operation of low-set step, tLow | 0.000-60.000 s in steps of 1 ms | ± 0.5 % ± 10 ms |
| Time delayed operation of high-set step, tHigh | 0.000-60.000 s in steps of 1 ms | ± 0.5 % ± 10 ms |
| Reset ratio | > 106% typically | |

# 11 Phase overcurrent protection (OCP)

## 11.1 Application

The overcurrent protection function (OCP) can be used wherever a "high current" signal is needed. There is a number of applications for the high current protection, wherever current has to be limited, or certain actions have to be taken when the current exceeds specific values.

## 11.2 Functionality

The amplitude of the phase currents are calculated by means Fourier filtering. When any of the phase currents are larger than the setting values for the high-set step or the low-set step, the corresponding start signal will be activated. At the same time the corresponding timer will be started. After the timer for the step has elapsed and there is a CR signal, a trip signal will be activated.

## 11.3 Function block

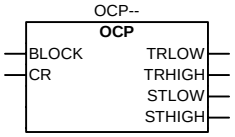

xx00000616.vsd

## 11.4 Logic diagram

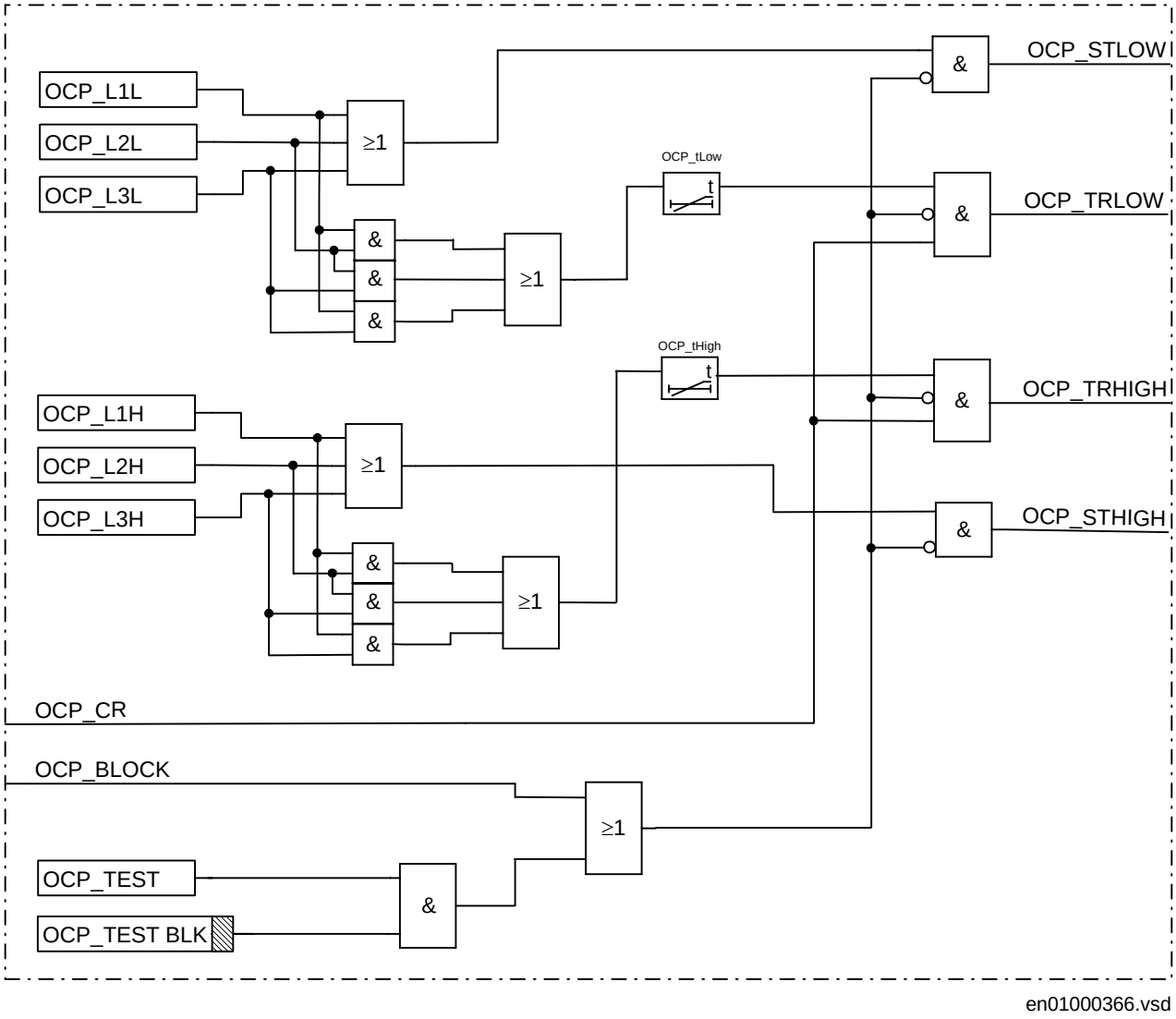


*Figure 138: OCP logic*

## 11.5 Input and output

**Table 321: Input signals for phase overcurrent protection (OCP--) function**

| Signal | Description |
|---|---|
| BLOCK | Block of overcurrent protection |
| CR | Received signal from communication channel logic |

## 11.6 Setting parameters

Path in local HMI-tree: Settings/Functions/SystemProtec/OverCurrentP

**Table 322: Settings for the phase overcurrent protection OCP (OCP--) function**

| Parameter | Range | Default | Unit | Description |
|---|---|---|---|---|
| Operation | On/Off | Off | - | Operation overcurrent protection function, Off/On |
| ILLow> | 5.0 - 200.0 Step: 0.1 | 120.0 | % of $I_b$ | Low-set step of overcurrent limit |
| ILHigh> | 5.0 - 200.0 Step: 0.1 | 130.0 | % of $I_b$ | High set step of overcurrent limit |
| tLow | 0.000 - 60.000 Step: 0.001 | 0.000 | s | Time delayed operation of low-set step |
| tHigh | 0.000 - 60.000 Step: 0.001 | 0.000 | s | Time delayed operation of hig-set step |

## 11.7 Technical data

**Table 323: OCP - Overcurrent protection function**

| Function | Value | Accuracy |
|---|---|---|
| Low-set operating value, ILLow> | 5.0-200.0% of Ib in steps of 0.1% | ± 5.0 % of $I_r$ |
| High-set operating value, ILHigh> | 5.0-200.0% of Ib in steps of 0.1% | ± 5.0 % of $I_r$ |
| Time delay of low-set step, tLow | 0.000-60.000 s in steps of 1 ms | ± 0.5 % ± 10 ms |
| Time delay of high-set step, tHigh | 0.000-60.000 s in steps of 1 ms | ± 0.5 % ± 10 ms |
| Reset ratio | > 94% typically | |

# 12 Residual overcurrent protection (ROCP)

## 12.1 Application

The residual overcurrent protection function (ROCP) can be used wherever a high residual current signal is needed. There is a number of applications for the high residual current protection, most of them related to earth faults in low impedance earthed systems. One example is to use the residual overcurrent protection as a simple earth fault protection, as a back-up for the primary earth fault protection included in the line distance protection.

## 12.2 Functionality

The amplitude of the residual current is calculated by means Fourier filtering. When the residual current is larger than the setting value for the high-set step or the low set step, the corresponding start signal will be activated. At the same time the corresponding timer will be started. After the timer for the step has elapsed and there is a CR signal, a trip signal will be activated.

## 12.3 Function block

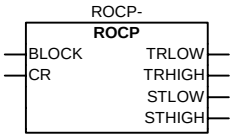


xx00000617.vsd

## 12.4 Logic diagram

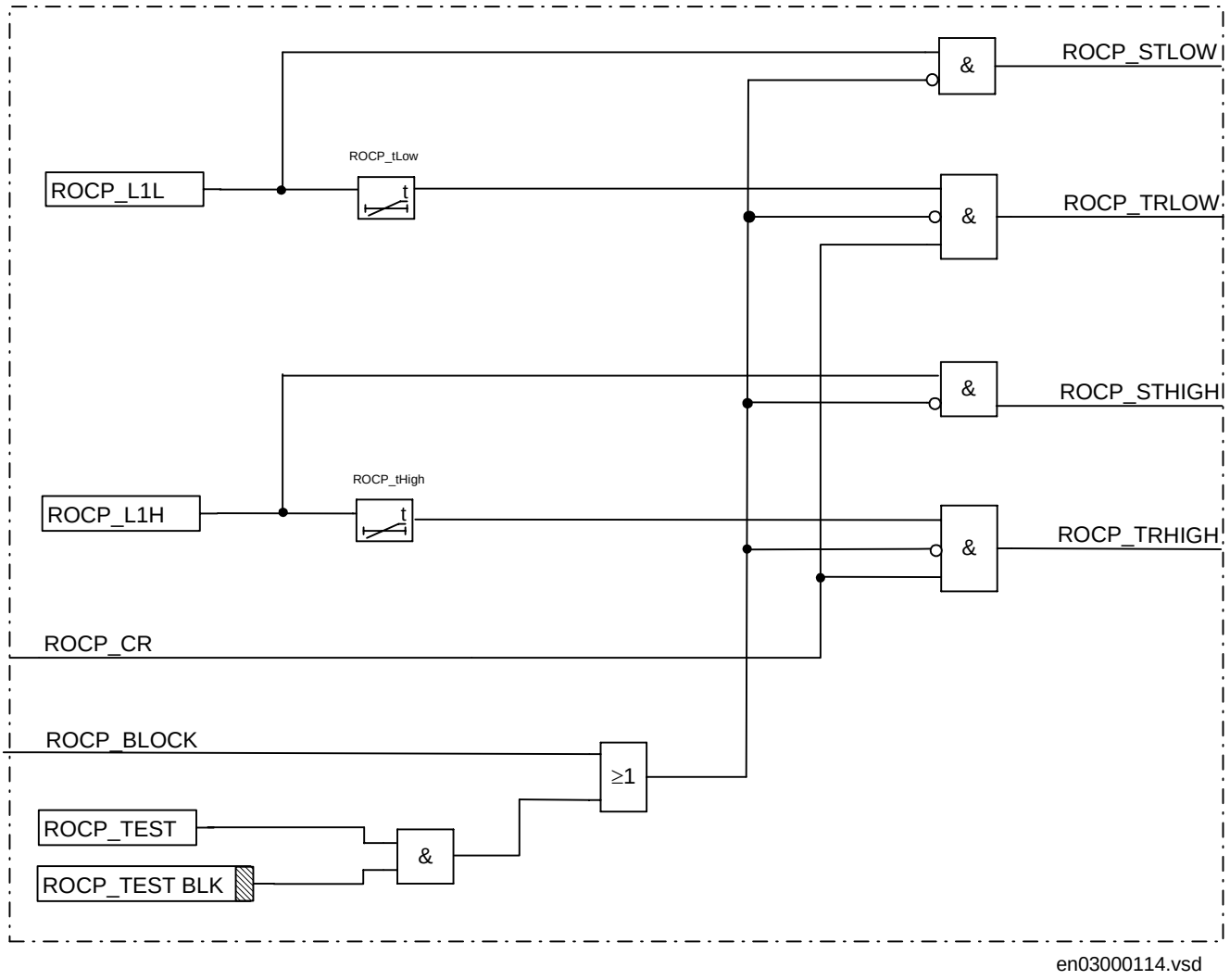


*Figure 139: ROCP logic*

## 12.5 Input and output signals

**Table 324: Input signals for the ROCP (ROCP-) function block**

| Signal | Description |
|---|---|
| BLOCK | Block of residual overcurrent protection |
| CR | Received signal from communication channel logic |

Path in local HMI: ServiceReport/Functions/SystemProtec/ResidOverCP/FuncOutputs

**Table 325: Output signals for the ROCP (ROCP-) function block**

| Signal | Description |
|---|---|
| TRLOW | Low-set trip by residual overcurrent protection |
| TRHIGH | High-set trip by residual overcurrent protection |
| STLOW | Low-set start by residual overcurrent protection |
| STHIGH | High-set start by residual overcurrent protection |

## 12.6 Setting parameters

Path in local HMI-tree: Settings/Functions/SystemsProtec/.....

**Table 326: Settings for the residual overcurrent protection ROCP (ROCP--) function**

| Parameter | Range | Default | Unit | Description |
|---|---|---|---|---|
| Operation | On/Off | Off | - | Operation residual overcurrent protection function, Off/On |
| INLow> | 5.0 - 100.0 Step: 0.1 | 20.0 | % of $I_b$ | Residual overcurrent limit |
| INHigh> | 5.0 - 100.0 Step: 0.1 | 30.0 | % of $I_b$ | Residual overcurrent limit |
| tLow | 0.000 - 60.000 Step: 0.001 | 0.000 | s | Time delayed operation of low-set step |
| tHigh | 0.000 - 60.000 Step: 0.001 | 0.000 | s | Time delayed operation of high-set step |
| IMeasured | I4, I5 | I4 | - | Current signal used in function |

## 12.7 Tecnical data

**Table 327: ROCP - Residual overcurrent protection function**

| Function | Setting range | Accuracy |
|---|---|---|
| Residual overcurrent low-set limit, INLow> | 5.0-100.0% of Ib in steps of 0.1% | ± 2.5 % of $I_r$ |
| Residual overcurrent high-set limit, INHigh> | 5.0-100.0% of Ib in steps of 0.1% | ± 2.5 % of $I_r$ |
| Time delayed operation of low-set step, tLow | 0.000-60.000 s in steps of 1 ms | ± 0.5 % ± 10 ms |
| Time delayed operation of high-set step, tHigh | 0.000-60.000 s in steps of 1 ms | ± 0.5 % ± 10 ms |
| Reset ratio | > 95% typically | |

# Chapter 14 Data communication

**About this chapter**

This chapter describes the data communication and the associated hardware.

# 1 Remote end data communication

## 1.1 Application

The remote terminal communication modules can be used either for differential line protection applications or for binary signal transfer of up to 32 signals in both directions between, for example, distance protections. The following hardware modules are available:

- V35/36 contra-directional and co-directional
- X.21
- RS530/422 contra-directional and co-directional
- G.703
- Short-range galvanic module
- Fibre optical communication module
- Short-range fibre optical module

## 1.2 Setting parameters

Path in local HMI-tree: Configuration/TerminalCom/RemTermCom

**Table 328: Setting parameters for remote terminal communication**

| Parameter | Range | Default | Unit | Description |
|---|---|---|---|---|
| TerminalNo | 0-255<br>Step: 1 | 0 | - | Select number for this terminal |
| RemoteTermNo | 0-255<br>Step: 1 | 0 | - | Select number for remote terminal |
| CommSync | Master, Slave | Master | - | Select Master or Slave for communication synchronisation |
| BitRate | 56 kb/s, 64kb/s | 56 kb/s | | Select bitrate for Codir communication |
| OptoPower | Low, High | Low | - | Select High or Low opto power |
| Format | 2.0, 2.2/2.3 | 2.2/2.3 | - | Line differential telegram format |

## 1.3 Fibre optical module

### 1.3.1 Application

The fibre optical communication module DCM-FOM can be used both with multi-mode and single-mode fibres.The communication distance can typically be 40-60 km for single mode fibre and typically 15-20 km for multi-mode fibre, and even further with high quality fibre. This interface can also be used for direct connection with communication equipment of type FOX 512/515 from ABB.

### 1.3.2 Technical data

**Table 329: DCM-FOM - Fibre optical communication module**

| **Optical interface** | | |
|---|---|---|
| Type of fibre | Graded-index multimode 50/125μm or 62,5/125μm | Single mode 9/125 μm |
| Wave length | 1300 nm | 1300 nm |
| Optical transmitter<br>injected power | LED<br>-17 dBm | LED<br>-22 dBm |
| Optical receiver<br>sensitivity | PIN diode<br>-38 dBm | PIN diode<br>-38 dBm |
| Optical budget | 21 dB | 16 dB |
| Transmission distance | typical 15-20 km [a)] | typical 40-60 km [a)] |
| Optical connector | Type FC-PC | Type FC-PC |
| Protocol | ABB specific | ABB specific |
| Data transmission | Synchronous, full duplex | Synchronous, full duplex |
| Transmission rate | 64 kbit/s | 64 kbit/s |
| Clock source | Internal or derived from received signal | Internal or derived from received signal |
| [a)] depending on optical budget calculation, see example in Application manual for REC 561 | | |

## 1.4 Galvanic interface

### 1.4.1 Application

The galvanic data communication modules according to V35/36 DCM-V36 contra, DCM-V36 co, X.21 DCM-X21, RS530/422 DCM-RS 530 contra, DCM-RS 530 co can be used for galvanic short range communication covering distances up to 100 m in low noise environments. Only contra-directional operation is recommended for best system performance. These modules are designed for 64 kbit/s operation but can also be used at 56 kbit/s.

### 1.4.2 Technical data

**Table 330: DCM - Galvanic data communication module**

| **Interface type** | **According to standard** | **Connector type** |
|---|---|---|
| V.36/V11 Co-directional (on request) | ITU (CCITT) | D-sub 25 pins |
| V.36/V11 Contra-directional | ITU (CCITT) | D-sub 25 pins |
| X.21/X27 | ITU (CCITT) | D-sub 15 pins |
| RS 530/RS422 Co-directional (on request) | EIA | D-sub 25 pins |

| **Interface type** | **According to standard** | **Connector type** |
|---|---|---|
| RS 530/RS422 Contra-directional | EIA | D-sub 25 pins |
| G.703 Co-directional | ITU (CCITT) | Screw |
| **Function** | **Value** | |
| Data transmission | synchronous, full duplex | |
| Transmission type | 56 or 64 kbit/s | |
| | For G703 only 64 kbit/s | |

## 1.5 Short range galvanic module

### 1.5.1 Application

The short-range galvanic module DCM-SGM can be used for communication over galvanic pilot wires and can operate over distances of up to 3 km depending on pilot wire cable. Twisted-pair or double-shielded cable is recommended.

### 1.5.2 Technical data

**Table 331: DCM-SGM - Short-range galvanic module**

| | |
|---|---|
| Data transmission | Synchronous, full duplex |
| Transmission rate | 64 kbit/s (256 kBaud; code transparent) |
| Clock source | Internal or derived from received signal |
| Range | < 3 km |
| Line interface | Balanced symmetrical three-state current loop (4 wires) |
| Connector | 5-pin connector with screw connection |
| Insulation | 2,5 kV 1 min. Opto couplers and insulating DC/DC-converter |
| | 15 kV with additional insulating transformer |

## 1.6 Short range fibre optical module

### 1.6.1 Application

The short-range fibre optical module DCM-SFOM can only be used with multi-mode fibre.The communication distance is normally 3 to 5 km. This module can also be used for direct connection to optical/electrical communication converters of type 21-15xx and 21-16xx from FIBERDATA

Physically the DCM module is inserted in slot position S19 for 1/2 19” rack.

Physically the DCM module is inserted in slot position S29 for 3/4 19” rack.

### 1.6.2 Technical data

**Table 332: DCM-SFOM - Short-range fibre optical module**

| | |
|---|---|
| Data transmission | Synchronous, full duplex |
| Transmission rate | 64 kbit/s |
| Clock source | Internal or derived from received signal |
| Optical fibre | Graded-index multimode 50/125µm or 62,5/125µm |
| Wave length | 850 nm |
| Optical connectors | ST |
| Optical budget | 15 dB |
| Transmission distance | typically 3-5 km [a)] |
| Protocol | FIBERDATA specific |
| Optical connector | Type ST |
| [a)] depending on optical budget calculation, see example in Application manual for REC 561 | |

## 1.7 Co-directional G. 703 galvanic interface

### 1.7.1 Application

The galvanic data communication module DCM-G.703 according to G.703 is not recommended for distances above 10 m. Special attention must be paid to avoid problems due to noise interference. This module is designed only for 64 kbit/s operation.

## 1.8 Carrier module

### 1.8.1 Application

Use the carrier module with the appropriate galvanic or optical communication submodule for short range communication of binary signals. Use the optical communication module (DCM-SFOM) when connecting a FIBERDATA 21-15X or FIBERDATA 21-16X optical-to-electric modem. The 21-15X model supports V.35 and V.36 standards, and the 21-16X model X.21 or G.703 standards.

### 1.8.2 Design

The carrier module is used to connect a communication sub-module to the platform. It adds the CAN-communication and the interface to the rest of the platform. By this the capability to transfer binary signals between for example two distance protection units is added.

The following three types of sub-modules can be added to the carrier module:

- Short range galvanic communication module (DCM-SGM)
- Short range optical communication module (DCM-SFOM)
- G.703 communication module (DCM-G.703)

The carrier module senses the type of sub-module via one of the two connectors.

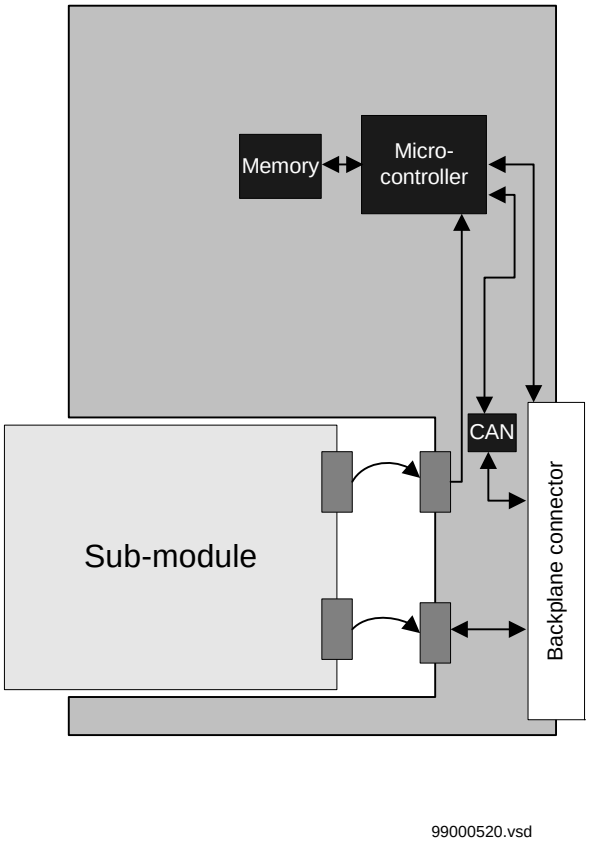


*Figure 140: Block diagram for the carrier module.*

# 2 Serial communication

## 2.1 Application, common

One or two optional serial interfaces with LON protocol, SPA protocol or IEC 60870-5-103 protocol, for remote communication, enables the terminal to be part of a Substation Control System (SCS) and/or Substation Monitoring System (SMS). These interfaces are located at the rear of the terminal. The two interfaces can be configured independent of each other, each with different functionalities regarding monitoring and setting of the functions in the terminal. For more information, please refer to Table 333: "Serial communication protocols - possible combinations of interface and connectors".

An optical network can be used within the Substation Control System. This enables communication with the terminal through the LON bus from the operator's workplace, from the control center and also from other terminals.

The second bus is used for SMS. It can include different numerical relays/terminals with remote communication possibilities. Connection to a personal computer (PC) can be made directly (if the PC is located in the substation) or by telephone modem through a telephone network with CCITT characteristics.

## 2.2 Design, common

The hardware needed for applying LON communication depends on the application, but one very central unit needed is the LON Star Coupler and optic fibres connecting the star coupler to the terminals. To communicate with the terminals from a Personal Computer (PC), the SMS 510 software or/and the application library LIB 520 together with MicroSCADA is needed.

The communciation alternatives available are shown in table 333.

**Table 333: Serial communication protocols - possible combinations of interface and connectors**

| | Alt. 1 | Alt. 2 | Alt. 3 |
|---|---|---|---|
| **X13** | SPA/IEC fibre optic | SPA/IEC RS485 | SPA fibre optic |
| **X15** | LON fibre optic | LON fibre optic | IEC fibre optic |

When communicating with a PC, using the rear SPA/IEC port, the only hardware needed for a station monitoring system is optical fibres and opto/electrical converter for the PC or a RS485 network according to EIA Standard RS-485. Remote communication over the telephone network also requires a telephone modem. The software needed in the PC when using SPA, either locally or remotely, is SMS 510 or/and CAP 540.

SPA communication is applied when using the front communication port, but for this purpose, no special serial communication function is required in the terminal. Only the software in the PC and a special cable for front connection is needed.

The IEC 60870-5-103 protocol implementation in REx 5xx consists of these functions:

- Event handling

- Report of analog service values (measurements)
- Fault location
- Command handling
  - Autorecloser ON/OFF
  - Teleprotection ON/OFF
  - Protection ON/OFF
  - LED reset
  - Characteristics 1 - 4 (Setting groups)
- File transfer (disturbance files)
- Time synchronization

The events created in the terminal available for the IEC protocol are based on the event function blocks EV01 - EV06 and disturbance function blocks DRP1 - DRP3. The commands are represented in a dedicated function block ICOM. This block has output signals according to the IEC protocol for all commands.

## 2.3 Setting parameters

Path in local HMI: Configuration/TerminalCom/SPA-IEC-LON

**Table 334: Setting parameter for selection of communication protocols for rear ports**

| Parameter | Range | Default | Unit | Description |
|---|---|---|---|---|
| Port | SPA-LON, IEC-LON, SPA-IEC | SPA-LON | - | Communication protocol alternatives for the rear communication ports |

## 2.4 Serial communication, SPA

### 2.4.1 Application

This communication bus is mainly used for SMS. It can include different numerical relays/terminals with remote communication possibilities. Connection to a personal computer (PC) can be made directly (if the PC is located in the substation) or by telephone modem through a telephone network with ITU (former CCITT) characteristics.

### 2.4.2 Design

When communicating with a PC, using the rear SPA port, the only hardware needed for a station monitoring system is:

- Optical fibres
- Opto/electrical converter for the PC
- PC

or

- An RS485 network installation according to EIA
- PC

Remote communication over the telephone network also requires a telephone modem.

The software needed in the PC, either local or remote, is CAP 540.

SPA communication is applied when using the front communication port, but for this purpose, no special serial communication function is required in the terminal. Only the software in the PC and a special cable for front connection is needed.

### 2.4.3 Setting parameters

Path in local HMI: Configuration/TerminalCom/SPACom/Rear

**Table 335: Setting parameters for SPA communication, rear comm. port**

| Parameter | Range | Default | Unit | Description |
|---|---|---|---|---|
| SlaveNo | (1 - 899) | 30 | - | SPA-bus identification number |
| BaudRate | 300, 1200, 2400, 4800, 9600, 19200, 38400 | 9600 | Baud | Communication speed |
| ActGrpRestrict | Open, Block | Open | - | Open = Access right to change between active groups |
| SettingRestrict | Open, Block | Open | - | Open = Access right to change any parameter |

Path in local HMI:Configuration/TerminalCom/SPACom/Front

**Table 336: Setting parameters for SPA communication, front comm. port**

| Parameter | Range | Default | Unit | Description |
|---|---|---|---|---|
| SlaveNo | (1 - 899) | 30 | - | SPA-bus identification number |
| BaudRate | 300, 1200, 2400, 4800, 9600 | 9600 | Baud | Communication speed |

### 2.4.4 Technical data

**Table 337: Serial communication (SPA), rear communication port**

| Function | Value |
|---|---|
| Protocol | SPA |
| Communication speed | 300, 1200, 2400, 4800, 9600, 19200 or 38400 Bd |
| Slave number | 1 to 899 |
| Remote change of active group allowed | yes/no |
| Remote change of settings allowed | yes/no |

**Table 338: Serial communication (RS485)**

| Function | Value |
|---|---|
| Protocol | SPA/IEC 60870-5-103 |
| Communication speed | 9600 Bd |

**Table 339: Serial communication (SPA) via front**

| Function | Value |
|---|---|
| Protocol | SPA |
| Communication speed for the terminals | 300, 1200, 2400, 4800, 9600 Bd |
| Slave number | 1 to 899 |
| Change of active group allowed | Yes |
| Change of settings allowed | Yes |

## 2.5 Serial communication, IEC (IEC 60870-5-103 protocol)

### 2.5.1 Application

This communication protocol is mainly used when a protection terminal communicates with a third party control system. This system must have a program that can interpret the IEC 60870-5-103 communication messages.

### 2.5.2 Design

As an alternative to the SPA communication the same port can be used for the IEC communication.

The IEC protocol may be used alternatively on a fibre optic or on an RS485 network. The fibre optic network is point to point only, while the RS485 network may be used by multiple terminals in a multidrop configuration.

***Note!***

*The RS485 network shall be terminated properly according to the standard, either in the relay terminal, by choosing the terminated RS485 interface, or externally as described in "Informative excerpt from EIA Standard RS485" in the Installation and commissioning manual.*

The IEC 60870-5-103 protocol implementation in REx 5xx consists of these functions:

- Event handling
- Report of analog service values (measurements)
- Fault location
- Command handling
  - Autorecloser ON/OFF
  - Teleprotection ON/OFF
  - Protection ON/OFF
  - LED reset

- Characteristics 1 - 4 (Setting groups)
- File transfer (disturbance files)
- Time synchronization

The events created in the terminal available for the IEC protocol are based on the event function blocks EV01 - EV06 and disturbance function blocks DRP1 - DRP3. The commands are represented in a dedicated function block ICOM. This block has output signals according to the IEC protocol for all commands.

### 2.5.3 IEC 60870-5-103

The tables below specifies the information types supported by the REx 5xx products with the communication protocol IEC 60870-5-103 implemented.

To support the information, corresponding functions must be included in the protection terminal.

There are no representation for the following parts:

- Generating events for test mode
- Cause of transmission: Info no 11, Local operation

EIA RS485 is not supported. Glass or plastic fibre should be used. BFOC/2.5 is the recommended interface to use (BFOC/2.5 is the same as ST connectors). ST are used with the optical power as specified in standard.

Glass or plastic fibre should be used for the optical ports. BFOC2.5 is the recommended interface to use (BFOC2.5 is the same as ST connectors). ST connectors are used with the optical power as specified in standard, please see the Installation and commissioning manual.

For the galvanic interface RS485, use terminated network according to EIA Standard RS-485. The modem contact for the cable is Phoenix MSTB2.5/6-ST-5.08 1757051.

For more information please see the IEC standard IEC 60870-5-103.

**Table 340: Information numbers in monitoring direction**

| *Info no* | *Message* | *Supported* |
|---|---|---|
| 2 | Reset FCB | Yes |
| 3 | Reset CU | Yes |
| 4 | Start/restart | Yes |
| 5 | Power on | No |
| | | |
| 16 | Autorecloser active | Yes |
| 17 | Teleprotection active | Yes |
| 18 | Protection active | Yes |
| 19 | LED reset | Yes |
| 20 | Information blocking | Yes |
| 21 | Test mode | No |
| 22 | Local parameter setting | No |

| | | |
|---|---|---|
| 23 | Characteristic 1 | Yes |
| 24 | Characteristic 2 | Yes |
| 25 | Characteristic 3 | Yes |
| 26 | Characteristic 4 | Yes |
| 27 | Auxiliary input 1 | Yes |
| 28 | Auxiliary input 2 | Yes |
| 29 | Auxiliary input 3 | Yes |
| 30 | Auxiliary input 4 | Yes |
| | | |
| 32 | Measurand supervision I | Yes |
| 33 | Measurand supervision V | Yes |
| 35 | Phase sequence supervision | No |
| 36 | Trip circuit supervision | Yes |
| 37 | I>> backup operation | Yes |
| 38 | VT fusefailure | Yes |
| 39 | Teleprotection disturbed | Yes |
| 46 | Teleprotection disturbed | Yes |
| 47 | Group alarm | Yes |
| | | |
| 48 | Earth fault L1 | Yes |
| 49 | Earth fault L2 | Yes |
| 50 | Earth fault L3 | Yes |
| 51 | Earth fault forward, e.g. line | Yes |
| 52 | Earth fault reverse, e.g. bus bar | Yes |
| 64 | Start/pickup L1 | Yes |
| 65 | Start/pickup L2 | Yes |
| 66 | Start/pickup L3 | Yes |
| 67 | Start/pickup N | Yes |
| 68 | General trip | Yes |
| 69 | Trip L1 | Yes |
| 70 | Trip L2 | Yes |
| 71 | Trip L3 | Yes |
| 72 | Trip I>> (back up operation) | Yes |
| 73 | Fault location X in Ohm | Yes |
| 74 | Fault forward/line | Yes |
| 75 | Fault reverse/busbar | Yes |
| 76 | Teleprotection signal transmitted | Yes |
| 77 | Teleprotection signal received | Yes |
| 78 | Zone 1 | Yes |
| 79 | Zone 2 | Yes |

| | | |
|---|---|---|
| 80 | Zone 3 | Yes |
| 81 | Zone 4 | Yes |
| 82 | Zone 5 | Yes |
| 83 | Zone 6 | Yes |
| 84 | General start/pickup | Yes |
| 85 | Breaker failure | Yes |
| 86 | Trip measuring system L1 | No |
| 87 | Trip measuring system L2 | No |
| 88 | Trip measuring system L2 | No |
| 89 | Trip measuring system E | No |
| 90 | Trip I> | Yes |
| 91 | Trip I>> | Yes |
| 92 | Trip IN> | Yes |
| 93 | Trip IN>> | Yes |
| 128 | CB “on" by AR | Yes |
| 129 | CB "on” by long-time AR | Yes |
| 130 | AR blocked | Yes |
| 144 | Measurand I | Yes |
| 145 | Measurands I,V | Yes |
| 147 | Measurands IN, VEN | Yes |
| 148 | Measurands IL1,2,3,VL123,P,Q,f | Yes |
| 240 | Read headings of all defined groups | No |
| 241 | Read values of all entries of one group | No |
| 243 | Read directory of a single entry | No |
| 244 | Read value of a single entry | No |
| 245 | End of general interrogation generic data | No |
| 249 | Write entry with confirmation | No |
| 250 | Write entry with execution | No |

**Table 341: Information numbers in Control direction**

| *Info no* | *Message* | *Supported* |
|---|---|---|
| 16 | Autorecloser on/off | Yes |
| 17 | Teleprotection on/off | Yes |
| 18 | Protection on/off | Yes |
| 19 | LED reset | Yes |
| 23 | Characteristic 1 | Yes |
| 24 | Characteristic 2 | Yes |
| 25 | Characteristic 3 | Yes |
| 26 | Characteristic 4 | Yes |

| | | |
|---|---|---|
| 240 | Read headings of all defined groups | No |
| 241 | Read values of all entries of one group | No |
| 243 | Read directory of a single entry | No |
| 244 | Read value of a single entry | No |
| 245 | General interrogation on generic data | No |
| 248 | Write entry | No |
| 249 | Write entry with confirmation | No |
| 250 | Write entry with execution | No |
| 251 | Write entry abort | No |

**Table 342: Measurands**

| *Measurand* | *Rated value* | |
|---|---|---|
| | 1.2 | 2.4 |
| Current L1 | | Yes |
| Current L2 | | Yes |
| Current L3 | | Yes |
| Voltage L1-E | | Yes |
| Voltage L2-E | | Yes |
| Voltage L3-E | | Yes |
| Voltage L1 -L2 | | Yes |
| Active power P | | Yes |
| Reactive power Q | | Yes |

**Table 343: Interoperability, physical layer**

| | *Supported* |
|---|---|
| Electrical Interface | |
| EIA RS485 | No |
| number of loads | No |
| Optical Interface | |
| glass fibre | Yes |
| plastic | Yes |
| Transmission Speed | |
| 9600 bit/s | Yes |
| 19200 bit/s | Yes |

| | |
|---|---|
| Link Layer | |
| DFC-bit used | Yes |
| Connectors | |
| connector F-SMA | No |
| connector BFOC2, 5 | Yes |

**Table 344: Interoperability, application layer**

| | | *Supported* |
|---|---|---|
| Selection of standard ASDUs in monitoring direction | | |
| ASDU | | |
| 1 | Time-tagged message | Yes |
| 2 | Time-tagged message with rel. time | Yes |
| 3 | Measurands I | Yes |
| 4 | Time-taggedmeasurands with rel.time | Yes |
| 5 | Identification | Yes |
| 6 | Time synchronization | Yes |
| 8 | End of general interrogation | Yes |
| 9 | Measurands II | Yes |
| 10 | Generic data | No |
| 11 | Generic identification | No |
| 23 | List of recorded disturbances | Yes |
| 26 | Ready for transm. of disturbance data | Yes |
| 27 | Ready for transm.of a channel | Yes |
| 28 | Ready for transm. of tags | Yes |
| 29 | Transmission of tags | Yes |
| 30 | Transmission of disturbance data | Yes |
| 31 | End of transmission | Yes |
| Selection of standard ASDUs in control direction | | |
| ASDU | | |
| 6 | Time synchronization | Yes |
| 7 | General interrogation | Yes |
| 10 | Generic data | No |
| 20 | General command | Yes |
| 21 | Generic command | No |
| 24 | Order for disturbance data transmission | Yes |
| 25 | Acknowledgement for distance data transmission | Yes |
| Selection of basic application functions | | |

| | | |
|---|---|---|
| | Test mode | No |
| | Blocking of monitoring direction | Yes |
| | Disturbance data | Yes |
| | Private data | No |
| | Generic services | No |

### 2.5.4 Function block

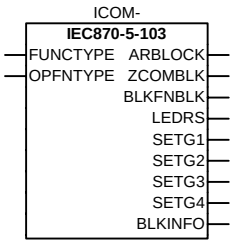


### 2.5.5 Input and output signals

**Table 345: Input signals for the IEC (ICOM-) function block**

| Signal | Description |
|---|---|
| FUNCTYPE | Main function type for terminal |
| OPFNTYPE | Main function type operation for terminal |

Path in local HMI: ServiceReport/Functions/IEC103Command

**Table 346: Output signals for the IEC (ICOM-) function block**

| Signal | Description |
|---|---|
| ARBLOCK | Command used for switching autorecloser on/off. |
| ZCOMBLK | Command used for switching teleprotection on/off. |
| BLKFNBLK | Command used for switching protection on/off. |
| LEDRS | Command used for resetting the LEDs. |
| SETG1 | Command used for activation of setting group 1. |
| SETG2 | Command used for activation of setting group 2. |
| SETG3 | Command used for activation of setting group 3. |
| SETG4 | Command used for activation of setting group 4. |
| BLKINFO | Output activated when all information sent to master is blocked. |

### 2.5.6 Setting parameters

**Table 347: Setting parameters for the IEC (ICOM-) function block**

| Parameter | Range | Default | Unit | Description |
|---|---|---|---|---|
| FuncType | 0-255 | 0 | - | Main function type for terminal<br>Set from CAP 540 |
| OpFnType | Off, On | Off | - | Main function type operation for terminal<br>Set from CAP 540 |

Path in local HMI: Configuration/TerminalCOM/IECCom/Commands/ARBlock

**Table 348: Setting parameters for controlling autorecloser command**

| Parameter | Range | Default | Unit | Parameter description |
|---|---|---|---|---|
| Operation | On, Off | Off | - | Operation mode of autorecloser command. On=Blocked, Off=Released |

Path in local HMI: Configuration/TerminalCom/IECCom/Commands/ZCommBlock

**Table 349: Configuration/TerminalCom/IECCom/Commands/ZCommBlock**

| Parameter | Range | Default | Unit | Parameter description |
|---|---|---|---|---|
| Operation | On, Off | Off | - | Operation mode of protection command. On=Blocked, Off=Released |

Path in local HMI: Configuration/TerminalCom/IECCom/Commands/LEDReset

**Table 350: Setting parameter for controlling the LED reset command**

| Parameter | Range | Default | Unit | Parameter description |
|---|---|---|---|---|
| Operation | On, Off | Off | - | Operation mode of LED reset command. On=Blocked, Off=Released |

Path in local HMI: Configuration/TerminalCom/IECCom/Commands/SettingGrpn where n=1-4

**Table 351: Setting parameter for controlling the active setting group n command. n=1-4**

| Parameter | Range | Default | Unit | Parameter description |
|---|---|---|---|---|
| Operation | On, Off | Off | - | Operation mode of active setting group command. On=Blocked, Off=Released |

Path in local HMI: Configuration/TerminalCom/IECCom/Measurands

**Table 352: Setting parameter for measurand type**

| Parameter | Range | Default | Unit | Parameter description |
|---|---|---|---|---|
| MeasurandType | 3.1, 3.2, 3.3, 3,4, 9 | 3.1 | - | Measurand types according to the standard |

Path in local HMI: Configuration/TerminalCom/IECCom/FunctionType

**Table 353: Setting parameters for main function types**

| Parameter | Range | Default | Unit | Parameter description |
|---|---|---|---|---|
| Operation | On, Off | Off | - | |
| MainFuncType | 1-255 | | - | Main function types according to the standard |

Path in local HMI: Configuration/TerminalCom/IECCom/Communication

**Table 354: Setting parameters for IEC communication**

| Parameter | Range | Default | Unit | Parameter description |
|---|---|---|---|---|
| SlaveNo | 0-255 | 30 | - | Slave number |
| BaudRate | 9600, 19200 | 19200 | Baud | Communication speed |

Path in local HMI: Configuration/TerminalCom/IECCom/BlockOfInfoCmd

**Table 355: IEC command**

| Command | Command description |
|---|---|
| BlockOfInfoCmd | Command with status and confirmation. Controls information sent to the master. |

## 2.5.7 Technical data

**Table 356: Serial communication (IEC 60870-5-103)**

| Function | Value |
|---|---|
| Protocol | IEC 60870-5-103 |
| Communication speed | 9600, 19200 Bd |

**Table 357: Serial communication (RS485)**

| Function | Value |
|---|---|
| Protocol | SPA/IEC 60870-5-103 |
| Communication speed | 9600 Bd |

## 2.6 Serial communication, LON

### 2.6.1 Application

An optical network can be used within the Substation Automation system. This enables communication with the terminal through the LON bus from the operator's workplace, from the control center and also from other terminals.

### 2.6.2 Design

An optical serial interface with LON protocol enables the terminal to be part of a Substation Control System (SCS) and/or Substation Monitoring System (SMS). This interface is located at the rear of the terminal. The hardware needed for applying LON communication depends on the application, but one very central unit needed is the LON Star Coupler and optic fibres connecting the star coupler to the terminals. To communicate with the terminals from a Personal Computer (PC), the SMS 510, software or/and the application library LIB 520 together with MicroSCADA is needed.

### 2.6.3 Setting parameters

Path in local HMI: Configuration/TerminalCom/LONCom/NodeInfo/AddressInfo

These parameters can only be set with the LNT, LON Network Tool. They can be viewed in the local HMI.

**Table 358: Setting parameters for the LON communication**

| Parameter | Range | Default | Unit | Parameter description |
|---|---|---|---|---|
| DomainID | 0 | 0 | - | Domain identification number |
| SubnetID | 0 - 255<br>Step: 1 | 0 | - | Subnet identification number |
| NodeID | 0 - 127<br>Step: 1 | 0 | - | Node identification number |

Path in local HMI: Configuration/TerminalCom/LONCom/NodeInfo

These parameters can only be set with the LNT, LON Network Tool. They can be viewed in the local HMI.

**Table 359: LON node information parameters**

| Parameter | Range | Default | Unit | Parameter description |
|---|---|---|---|---|
| NeuronID | 0 - 12 | Not loaded | - | Neuron hardware identification number in hexadecimal code |
| Location | 0 - 6 | No value | - | Location of the node |

Path in local HMI: Configuration/TerminalCom/LONCom/SessionTimers

**Table 360: Setting parameters for the session timers**

| Parameter | Range | Default | Unit | Parameter description |
|---|---|---|---|---|
| SessionTmo | 1-60 | 20 | s | Session timeout. Only to be changed after recommendation from ABB. |
| RetryTmo | 100-10000 | 2000 | ms | Retransmission timeout.Only to be changed after recommendation from ABB. |
| IdleAckCycle | 1-30 | 5 | s | Keep active ack.Only to be changed after recommendation from ABB. |
| BusyAckTmo | 100-5000 | 300 | ms | Wait before sending ack.Only to be changed after recommendation from ABB. |
| ErrNackCycle | 100-10000 | 500 | ms | Cyclic sending of nack. Only to be changed after recommendation from ABB. |

Path in local HMI: Configuration/TerminalCom/LONCom

**Table 361: LON commands**

| Command | Command description |
|---|---|
| ServicePinMsg | Command with confirmation. Transfers the node adress to the LON network tool. |
| LONDefault | Command with confirmation. Resets the LON communication in the terminal. |

### 2.6.4 Technical data

**Table 362: LON - Serial Communication**

| Function | Value |
|---|---|
| Protocol | LON |
| Communication speed | 1.25 Mbit/s |

## 2.7 Serial communication modules (SCM)

### 2.7.1 Design, SPA/IEC

The serial communication module for SPA/IEC is placed in a slot at the rear of the main processing module. One of the following conection options is available for serial communication:

- two plastic fibre cables; (Rx, Tx) or
- two glass fibre cables; (Rx, Tx) or
- galvanic RS485

The type of connection is chosen when ordering the terminal.

The fibre optic SPA/IEC port can be connected point-to-point, in a loop, or with a star coupler. The incoming optical fibre is connected to the Rx receiver input and the outgoing optical fibre to the Tx transmitter output. The module is identified with a number on the label on the module.

The electrical RS485 can be connected in multidrop with maximum 4 terminals.

### *Note!*

*Pay special attention to the instructions concerning the handling, connection, etc. of the optical fibre cables.*

## 2.7.2 Design, LON

The serial communication module for LON is placed in a slot at the rear of the Main processing module. One of the following options is available for serial communication:

- two plastic fibre cables; (Rx, Tx) or
- two glass fibre cables; (Rx, Tx)

The type of connection is chosen when ordering the terminal.

The incoming optical fibre is connected to the Rx receiver input and the outgoing optical fibre to the Tx transmitter output. The module is identified with a number on the label on the module.

### *Note!*

*Pay special attention to the instructions concerning the handling, connection, etc. of the optical fibre cables.*

## 2.7.3 Technical data

**Table 363: Optical fibre connection requirements for SPA/IEC**

| | **Glass fibre** | **Plastic fibre** |
|---|---|---|
| Cable connector | ST connector | HFBR, Snap-in connector |
| Fibre diameter | 62.5/125 μm<br>50/125 μm | 1 mm |
| Max. cable length | 1000 m | 25 m |

**Table 364: RS485 connection requirements for SPA/IEC**

| | |
|---|---|
| Cable connector | Phoenix, MSTB 2.5/6-ST-5.08 1757051 |
| Cable dimension | SSTP according to EIA Standard RS485 |
| Max. cable length | 100 m |

**Table 365: LON - Optical fibre connection requirements for LON bus**

| | **Glass fibre** | **Plastic fibre** |
|---|---|---|
| Cable connector | ST-connector | HFBR, Snap-in connector |
| Fibre diameter | 62.5/125 µm<br>50/125 µm | 1 mm |
| Max. cable length | 1000 m | 25 m |

# Chapter 15 Hardware modules

### About this chapter

This chapter describes the different hardware modules.

# 1 Modules

**Table 366: Basic, always included, modules**

| Module | Description |
|---|---|
| Backplane module (BPM) | Carries all internal signals between modules in a terminal. The size of the module depends on the size of the case. |
| Power supply module (PSM) | Including a regulated DC/DC converter that supplies auxiliary voltage to all static circuits.<br>• For case size 1/2x19" and 3/4x19" a version with four binary inputs and four binary outputs used. An internal fail alarm output is also available. |
| Main processing module (MPM) | Module for overall application control. All information is processed or passed through this module, such as configuration, settings and communication. . |
| Human machine interface (LCD-HMI) | The module consist of LED:s, a LCD, push buttons and an optical connector for a front connected PC |
| Signal processing module (SPM) | Module for protection algorithm processing. Carries up to 12 digital signal processors, performing all measuring functions. |

**Table 367: Application specific modules**

| Module | Description |
|---|---|
| Milliampere input module (MIM) | Analog input module with 6 independent, galvanically separated channels. |
| Binary input module (BIM) | Module with 16 optically isolated binary inputs |
| Binary output module (BOM) | Module with 24 single outputs or 12 double-pole command outputs including supervision function |
| Binary I/O module (IOM) | Module with 8 optically isolated binary inputs, 10 outputs and 2 fast signalling outputs. |
| Data communication modules (DCMs) | Modules used for digital communication to remote terminal. |
| Transformer input module (TRM) | Used for galvanic separation of voltage and/or current process signals and the internal circuitry. |
| A/D conversion module (ADM) | Used for analog to digital conversion of analog process signals galvanically separated by the TRM. |
| Optical receiver module (ORM) | Used to interface process signals from optical instrument transformers. |
| Serial communication module (SCM) | Used for SPA/LON/IEC communication |
| LED module (LED-HMI) | Module with 18 user configurable LEDs for indication purposes |

# 2 A/D module (ADM)

## 2.1 Design

The inputs of the A/D-conversion module (ADM) are fed with voltage and current signals from the transformer module. The current signals are adapted to the electronic voltage level with shunts. To gain dynamic range for the current inputs, two shunts with separate A/D channels are used for each input current. By that a 16-bit dynamic range is obtained with a 12 bits A/D converter.

The input signals passes an anti aliasing filter with a cut-off frequency of 500 Hz.

Each input signal (5 voltages and 5 currents) is sampled with a sampling frequency of 2 kHz.

The A/D-converted signals are low-pass filtered with a cut-off frequency of 250 Hz and down-sampled to 1 kHz in a digital signal processor (DSP) before transmitted to the main processing module.

# 3 Transformer module (TRM)

## 3.1 Design

A transformer input module can have up to 10 input transformers. The actual number depends on the type of terminal. Terminals including only current measuring functions only have current inputs. Fully equipped the transformer module consists of:

- Five voltage transformers
- Five current transformers

The inputs are mainly used for:

- Phase currents
- Residual current of the protected line
- Residual current of the parallel circuit (if any) for compensation of the effect of the zero sequence mutual impedance on the fault locator measurement or residual current of the protected line but from a parallel core used for CT circuit supervision function or independent earth fault function.
- Phase voltages
- Open delta voltage for the protected line (for an optional directional earth-fault protection)
- Phase voltage for an optional synchronism and energizing check.

## 3.2 Technical data

**Table 368: TRM - Energizing quantities, rated values and limits**

| Quantity | Rated value | Nominal range |
|---|---|---|
| Current | $I_r$ = 1 or 5 A | (0.2-30) × $I_r$ |
| | $I_r$=0.1, 0.5, 1 or 5 A for $I_5$ | |
| Operative range | (0.004-100) x $I_r$ | |
| Permissive overload | 4 × $I_r$ cont. | |
| | 100 × $I_r$ for 1 s *) | |
| Burden | < 0.25 VA at $I_r$ = 1 or 5 A | |
| | < 0.02 VA at $I_r$ = 0.1 or 0.5 A | |
| Ac voltage for the terminal | $U_r$ = 110 V **) | 100/110/115/120 V |
| | $U_r$ = 220 V **) | 200/220/230/240 V |
| Operative range | (0.001-1.5) x $U_r$ | |

| Quantity | Rated value | Nominal range |
|---|---|---|
| Permissive overload | 2.3 × $U_r$ phase-earth, cont.<br>3.0 x $U_r$ phase-earth, for 1 s | |
| Burden | < 0.2 VA at $U_r$ | |
| Frequency | $f_r$ = 50/60 Hz | +/-10% |
| *) max. 350 A for 1 s when COMBITEST test switch is included.<br>**) The rated voltage of each individual voltage input U1 to U5 is $U_r/\sqrt{3}$ | | |

# 4 Binary I/O capabilities

## 4.1 Application

Input channels with high EMI immunity can be used as binary input signals to any function. Signals can also be used in disturbance or event recording. This enables extensive monitoring and evaluation of the operation of the terminal and associated electrical circuits.

## 4.2 Design

Inputs are designed to allow oxide burn-off from connected contacts, and increase the disturbance immunity during normal protection operate times. This is achieved with a high peak inrush current while having a low steady-state current. Inputs are debounced by software.

Well defined input high and input low voltages ensures normal operation at battery supply earth faults.

The voltage level of the inputs is selected when ordering.

I/O events are time stamped locally on each module for minimum time deviance and stored by the event recorder if present.

## 4.3 Technical data

**Table 369: BIM, IOM, PSM - Binary inputs**

| Inputs | RL24 | RL48 | RL110 | RL220 |
|---|---|---|---|---|
| Binary inputs | BIM: 16, IOM: 8, PSM: 4 | | | |
| Debounce frequency | 5 Hz (BIM), 1 Hz (IOM) | | | |
| Oscillating signal discriminator.* | Blocking and release settable between 1-40 Hz | | | |
| Binary input voltage RL | 24/30 VDC +/-20% | 48/60 VDC +/-20% | 110/125 VDC +/-20% | 220/250 VDC +/-20% |
| Power dissipation (max.) | 0.05 W/input | 0.1 W/input | 0.2 W/input | 0.4 W/input |
| *) Only available for BIM | | | | |

**Table 370: BOM, IOM, PSM - Binary outputs**

| Function or quantity | | Trip and Signal relays | Fast signal relays |
|---|---|---|---|
| Binary outputs | | BOM: 24, IOM: 10, PSM: 4 | IOM: 2 |
| Max system voltage | | 250 V AC, DC | 250 V AC, DC |
| Test voltage across open contact, 1 min | | 1000 V rms | 800 V DC |
| Current carrying capacity | Continuous | 8 A | 8 A |
| | 1 s | 10 A | 10 A |

| **Function or quantity** | | **Trip and Signal relays** | **Fast signal relays** |
|---|---|---|---|
| Making capacity at inductive load with L/R>10 ms | 0.2 s | 30 A | 0.4 A |
| | 1.0 s | 10 A | 0.4 A |
| Breaking capacity for AC, cos φ>0.4 | | 250 V/8.0 A | 250 V/8.0 A |
| Breaking capacity for DC with L/R<40ms | | 48 V/1 A | 48 V/1 A |
| | | 110 V/0.4 A | 110 V/0.4 A |
| | | 220 V/0.2 A | 220 V/0.2 A |
| | | 250 V/0.15 A | 250 V/0.15 A |
| Maximum capacitive load | | - | 10 nF |
| Power consumption for each output relay | | ≤ 0.15 W | |

**Table 371: Power consumption**

| **Module** | **Power consumption** |
|---|---|
| Binary input/output module (IOM) | ≤ 1.0 W |
| Binary input module (BIM) | ≤ 0.5 W |
| Binary output module (BOM) | ≤ 1.0 W |

# 5 Binary input module (BIM)

## 5.1 Application

The binary input module has 16 optically isolated inputs and is available in two versions, one standard and one with enhanced pulse counting inputs to be used with the pulse counter function.

## 5.2 Design

The binary input module, BIM, has 16 optically isolated binary inputs.

A signal discriminator detects and blocks oscillating signals. When blocked, a hysteresis function may be set to release the input at a chosen frequency, making it possible to use the input for pulse counting. The blocking frequency may also be set.

## 5.3 Function block

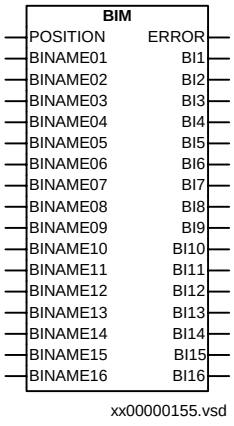


*Figure 141: Binary input module*

## 5.4 Input and output signals

**Table 372: Input signals for binary input module BIM**

| Signal | Description |
|---|---|
| POSITION | I/O module slot position |
| BINAME01-BINAME16 | Input name string settings |

Path in local HMI: ServiceReport/IO/Slotnn-BIMn/FuncOutputs

**Table 373: Output signals for binary input module BIM**

| Signal | Description |
|---|---|
| ERROR | Binary module fail |
| BI1-BI16 | Binary input data |

# 6 Binary output module (BOM)

## 6.1 Application

The binary output module has 24 independent output relays and is used for trip output or any signalling purpose.

## 6.2 Design

The binary output module (BOM) has 24 software supervised output relays. Two relays share a common power source input. This should be considered when connecting the wiring to the connection terminal on the back of the IED.

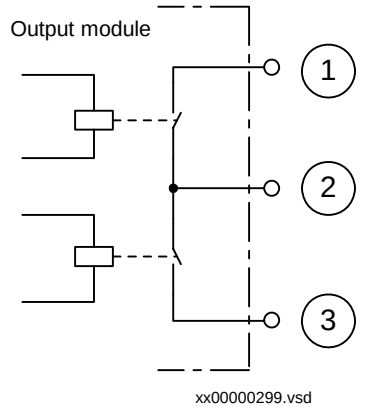


| | |
|---|---|
| 1 | Output connection from relay 1 |
| 2 | Ootput signal power source connection |
| 3 | Output connection from relay 2 |

*Figure 142: Relay pair example*

## 6.3 Function block

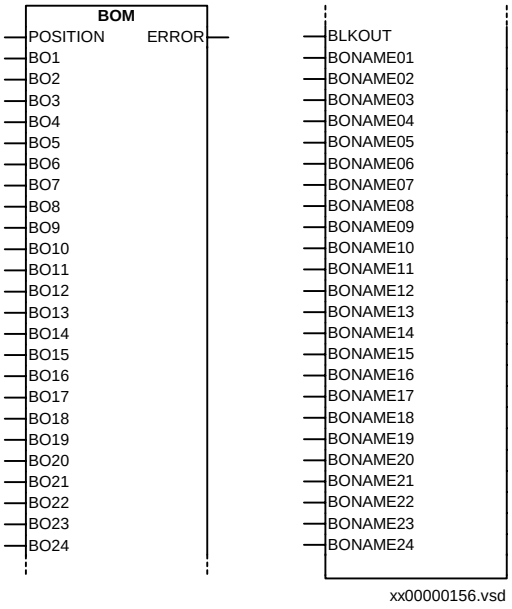


*Figure 143: Binary output module*

## 6.4 Input and output signals

**Table 374: Input signals for binary output module BOM**

| Signal | Description |
|---|---|
| POSITION | I/O module slot position |
| BO1-BO24 | Binary output data |
| BLKOUT | Block output signals |
| BONAME01-BONAME24 | Output name string settings |

Path in local HMI: ServiceReport/I/O/Slotnn-BOMn/FuncOutputs

**Table 375: Output signals for binary output module BOM**

| Signal | Description |
|---|---|
| ERROR | Binary module fail |

# 7 I/O module (IOM)

## 7.1 Application

The binary input/output module is used when only a few input and output channels are needed. The ten standard output channels are used for trip output or any signalling purpose. The two high speed signal output channels are used for applications where short operating time is essential. Eight optically isolated binary inputs cater for required binary input information.

## 7.2 Design

The binary I/O module, IOM, has eight optically isolated inputs and ten output relays. One of the outputs has a change-over contact. The nine remaining output contacts are connected in two groups. One group has five contacts with a common and the other group has four contacts with a common, to be used as single-output channels.

The binary I/O module also has two high speed output channels where a reed relay is connected in parallel to the standard output relay.

***Note!***

*The making capacity of the reed relays are limited.*

## 7.3 Function block

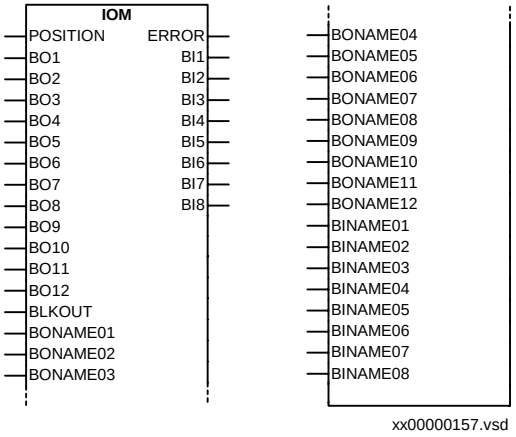


*Figure 144: I/O module*

## 7.4 Input and output signals

**Table 376: Input signals for I/O module IOM**

| Signal | Description |
|---|---|
| POSITION | I/O module slot position |
| BO1-BO12 | Binary output data |
| BLKOUT | Block output signals |
| BONAME01-BONAME12 | Output name string settings |
| BINAME01-BINAME08 | Input name string settings |

Path in local HMI: ServiceReport/I/O/slotnn-IOMn/FuncOutputs

**Table 377: Output signals for I/O module IOM**

| Signal | Description |
|---|---|
| ERROR | Binary module fail |
| BI1-BI8 | Binary input data |

# 8 mA input module (MIM)

## 8.1 Application

Use the milliampere input module, MIM, to interface transducer signals in the ± 20 mA range from for example temperature and pressure transducers.

## 8.2 Design

The milliampere input module has six input channels, each with a separate protection and filter circuit, A/D converter and optically isolated connection to the backplane.

The digital filter circuits have individually programmable cut-off frequencies, and all parameters for filtering and calibration are stored in a nonvolatile memory on the module. The calibration circuitry monitors the module temperature and commences an automatical calibration procedure if the temperature drift increase outside the allowed range. The module uses the serial CAN bus for backplane communication.

Signal events are time stamped locally for minimum time deviance and stored by the event recorder if present.

## 8.3 Function block

See Monitoring / Monitoring of DC analog measurements.

## 8.4 Technical data

**Table 378: MIM - Energizing quantities, rated values and limits**

| Quantity | | | Rated value | Nominal range |
|---|---|---|---|---|
| mA input module | input range | | ± 20 mA | - |
| | input resistance | | $R_{in}$ = 194 ohm | - |
| | power consumption | each mA-module | ≤ 4 W | - |
| | | each mA-input | ≤ 0.1 W | - |

**Table 379: MIM - Temperature dependence**

| Dependence on | Within nominal range | Influence |
|---|---|---|
| Ambient temperature, mA-input ± 20 mA | -10°C to +55°C | 0.02% / °C |

# 9 Power supply module (PSM)

## 9.1 Application

The power supply module, PSM, with built in binary I/O is used in 1/2 and 3/4 of full width 19” units. It has four optically isolated binary inputs and five binary outputs, out of which one binary output is dedicated for internal fail.

## 9.2 Design

The power supply modules contain a built-in, self-regulated DC/DC converter that provides full isolation between the terminal and the battery system.

The power supply module, PSM, has four optically isolated binary inputs and four output relays.

## 9.3 Function block

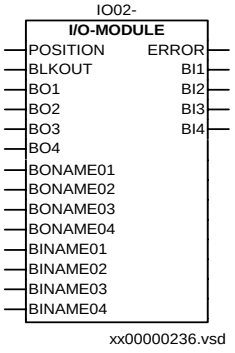


*Figure 145: Binary I/O on the power supply module PSM*

## 9.4 Input and output signals

**Table 380: Input signals for the I/O-module (IO02-) function block (I/O on PSM)**

| Signal | Description |
|---|---|
| POSITION | I/O module slot position connector |
| BLKOUT | Block output signals |
| BO1-BO4 | Binary output data |
| BONAME01-BONAME04 | Output name string settings |
| BINAME01-BINAME04 | Input name string settings |

Path in local HMI: ServiceReport/I/O/slotnn-PSMn/FuncOutputs

**Table 381: Output signals for the I/O-module (IO02-) function block (I/O on PSM)**

| Signal | Description |
|---|---|
| ERROR | I/O-module fail |
| BI1-BI4 | Binary input data |

## 9.5 Technical data

**Table 382: PSM - Power Supply Module**

| Quantity | Rated value | Nominal range |
|---|---|---|
| Auxiliary dc voltage | EL = (48 - 250) V | ± 20% |

# 10 Local LCD human machine interface (LCD-HMI)

## 10.1 Application

The human machine interface is used to monitor and in certain aspects affect the way the product operates. The configuration designer can add functions for alerting in case of important events that needs special attention from you as an operator.

Use the terminals built-in communication functionality to establish SMS communication with a PC with suitable software tool. Connect the PC to the optical connector on the local HMI with the special front communication cable including an opto-electrical converter for disturbance free and safe communication.

## 10.2 Design

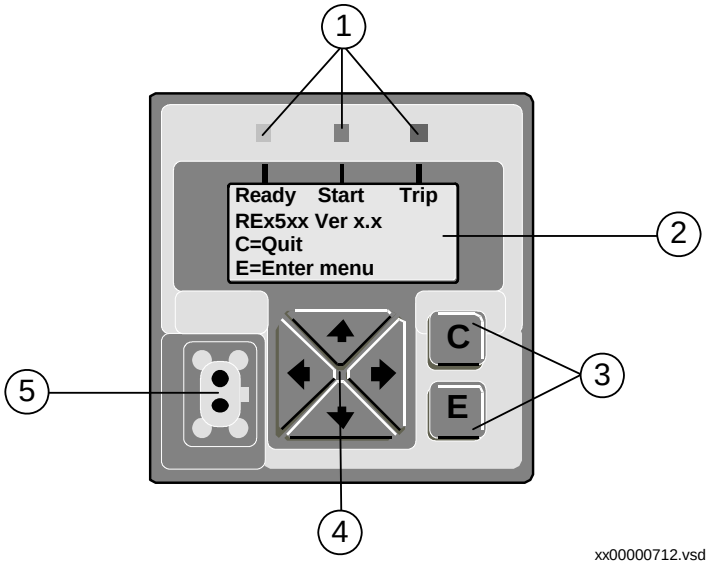


| |
|---|
| 1. Status indication LEDs |
| 2. LCD display |
| 3. *Cancel* and *Enter* buttons |
| 4. Navigation buttons |
| 5. Optical connector |

*Figure 146: The LCD-HMI module*

The number of buttons used on the HMI module is reduced to a minimum to allow a communication as simple as possible for the user. The buttons normally have more than one function, depending on actual dialogue.

# 11 18 LED indication module (LED-HMI)

## 11.1 Application

The LED indication module is an option for the feature for the REx 5xx terminals for protection and control and consists totally of 18 LEDs (Light Emitting Diodes). The main purpose is to present on site an immediate visual information such as protection indications or alarm signals. It is located on the front of the protection and control terminals.

## 11.2 Functionality

The 18 LED indication module is equipped with 18 LEDs, which can light or flash in either red, yellow or green color. A description text can be added for each of the LEDs.

See LED indication function (HL, HLED) for details on application and functionality.

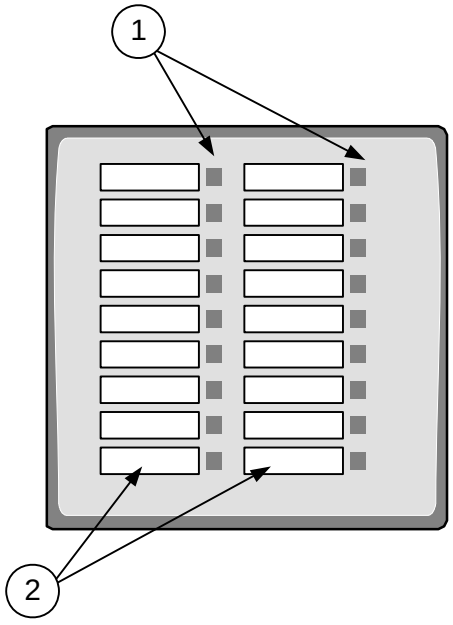


xx00000406.vsd

| | |
|---|---|
| 1 | Three-color LEDs |
| 2 | Descriptive label, user exchangeable |

*Figure 147: The 18 LED indication module (LED-HMI)*

## 11.3 LED indication function (HL,HLED)

### 11.3.1 Application

Each LED indication on the HMI LED module can be set individually to operate in six different sequences; two as follow type and four as latch type. Two of the latching types are intended to be used as a protection indication system, either in collecting or re-starting mode, with reset functionality. The other two are intended to be used as a signaling system in collecting mode with an acknowledgment functionality. See Application manual for more detailed information.

### 11.3.2 Design

The LED indication function consists of one common function block named HLED and one function block for each LED named HL01, HL02,..., HL18.

The color of the LEDs can be selected in the function block to red, yellow or green individually. The input signal for an indication has separate inputs for each color. If more than one color is used at the same time, the following priority order is valid; red, yellow and green, with red as highest priority.

The information on the LEDs is stored at loss of the auxiliary power for the terminal, so that the latest LED picture appears immediately after the terminal has restarted succesfully.

### 11.3.3 Function block

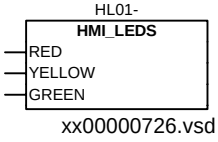

xx00000726.vsd

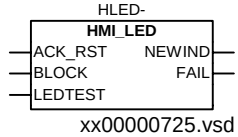

xx00000725.vsd

### 11.3.4 Input and output signals

**Table 383: Input signals for the HMI_LEDs (HLnn-) function block**

| Signal | Description |
|---|---|
| RED | Signal input for indication with red color. |
| YELLOW | Signal input for indication with yellow color. |
| GREEN | Signal input for indication with green color. |

**Table 384: Input signals for the HMI_LED (HLED-) function block**

| Signal | Description |
|---|---|
| ACK-RST | Input to acknowledge/reset the indications on the LED-unit. To be used for external acknowledgement/reset. |
| BLOCK | Input to block the operation of the LED-unit. To be used for external blocking. |
| LEDTEST | Input for external LED test. Common for the whole LED-unit. |

Path in local HMI: ServiceReport/Functions/HMI LED

**Table 385: Output signals for the HMI_LED (HLED-) function block**

| Signal | Description |
|---|---|
| NEWIND | Output that gives a pulse each time a new signal on any of the indication inputs occurs. |
| FAIL | Indication for overflow in HMI-LED buffer. |

### 11.3.5 Setting parameters

Path in local HMI: Settings/Functions/Groupn/HMI LED

**Table 386: Setting parameters for the LED indication function**

| Parameter | Range | Default | Unit | Description |
|---|---|---|---|---|
| Operation | On, Off | On | - | Operation for the LED-function. |
| tRestart | 0.0 - 90000.0<br>Step: 0.1 | 5.0 | s | Defines the disturbance length after the last active signal has been reset or reached its tMax. Applicable only in mode LatchedReset-S. |
| tMax | 0.0 - 90000.0<br>Step: 0.1 | 5.0 | s | The maximum time an indication is allowed to affect the definition of a disturbance. Applicable only in mode LatchedReset-S. |
| SeqTypeLEDx | Follow-S,<br>Follow-F,<br>LatchedAck-F-S,<br>LatchedAck-S-F,<br>LatchedColl-S,<br>LatchedReset-S | Follow-S | - | Sequence type for the indication in LED n(n = 1-18). S = Steady and F = Flashing light. |

# 12 Optical receiver module (ORM)

## 12.1 Application

The optical receiver module (ORM) is used to interface signals from optical instrument transformers (OITP) to the terminal. The ORM module can replace the conventional analog input modules. Either 50 or 60 Hz signals is handled by the module. Only one of the frequencies must be selected and used for all inputs.

## 12.2 Design

The optical receiver module has four optical input channels that handles data from optical instrument transformers (OITP). It converts the OITP data to a format used in the terminal. The received data is processed in different ways depending on the setting of the eight pole dip-switch of the module.

## 12.3 Logic diagram

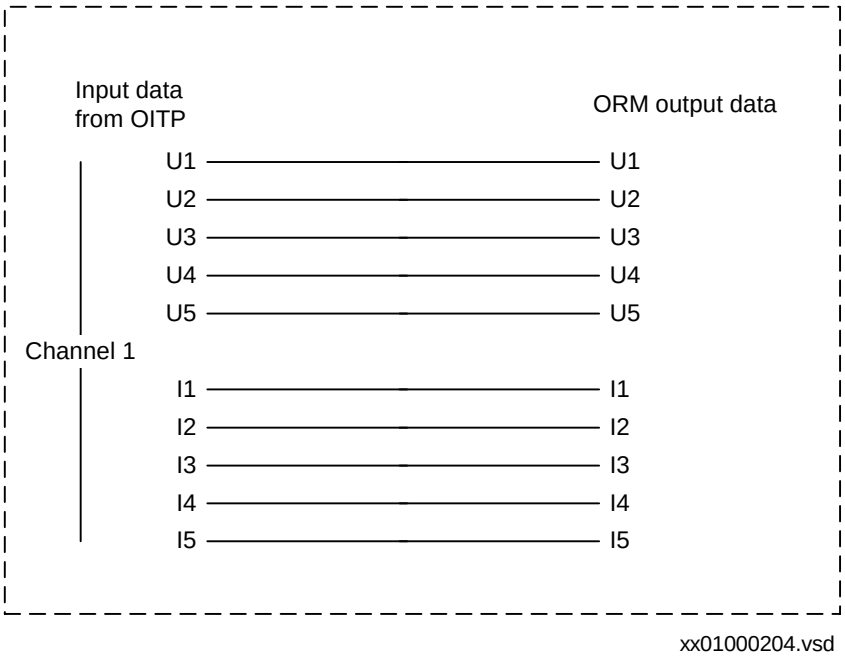


*Figure 148: Straight connection*

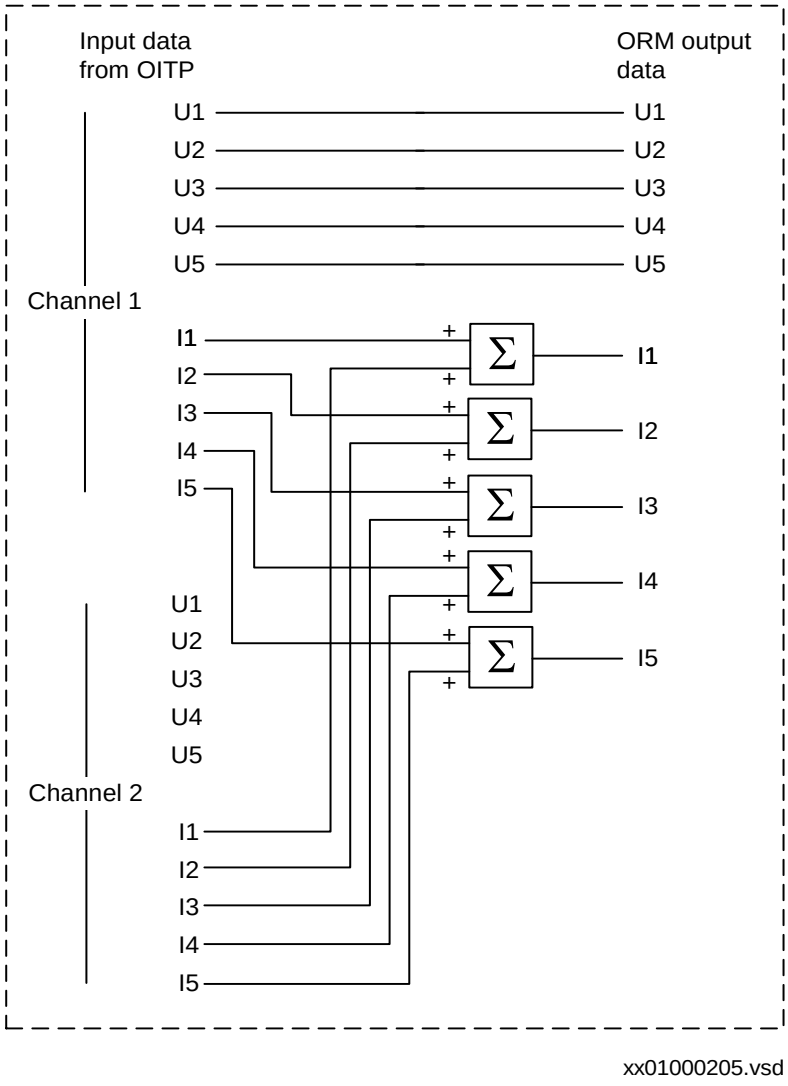


*Figure 149: Line terminal connection*

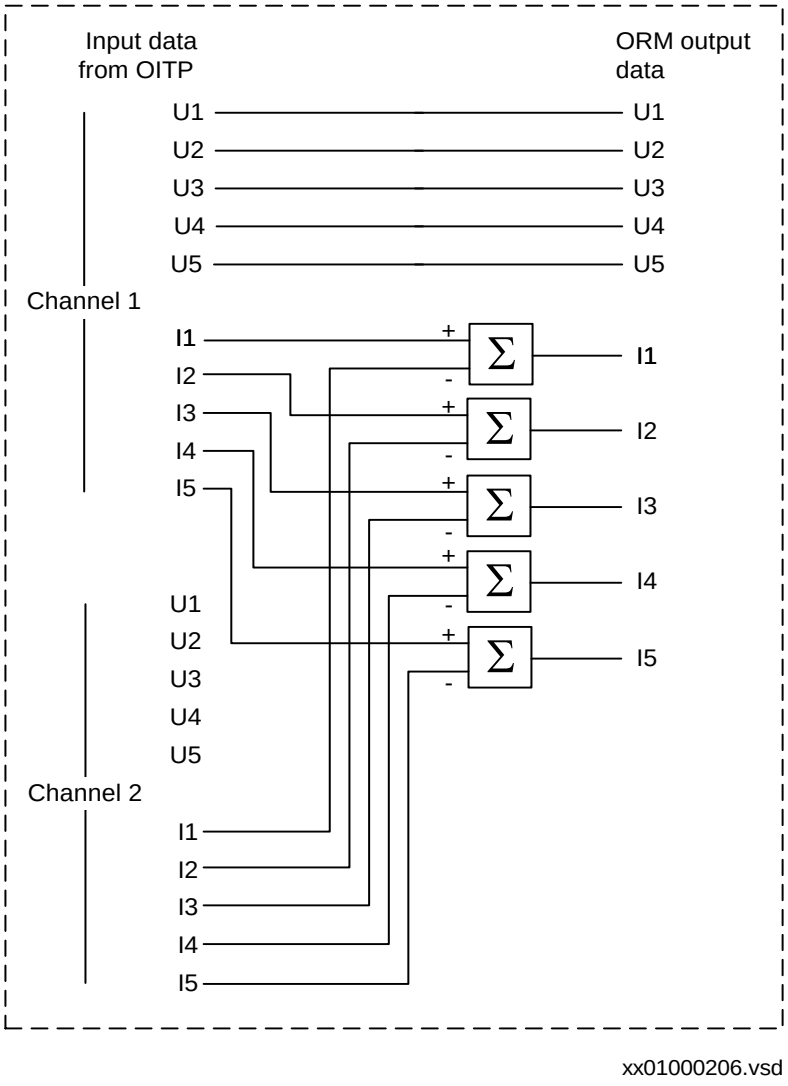


*Figure 150: Line terminal connection, reversed current direction channel 2*

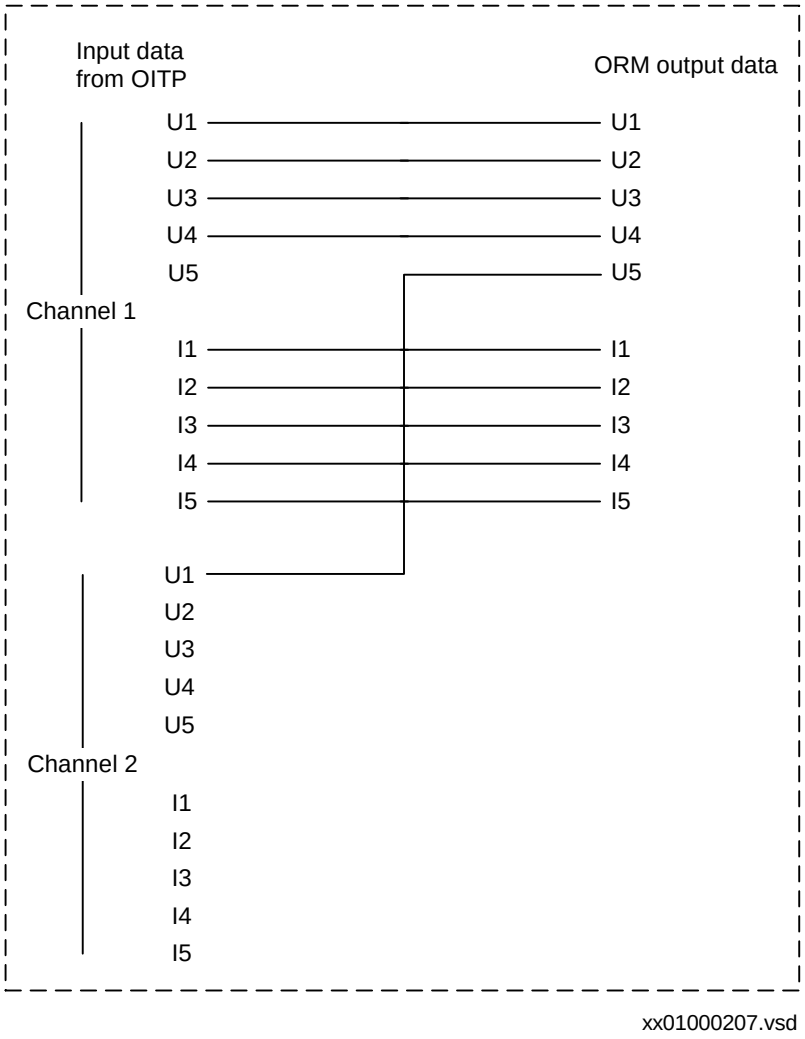


*Figure 151: Signal selection for synchro check functions*

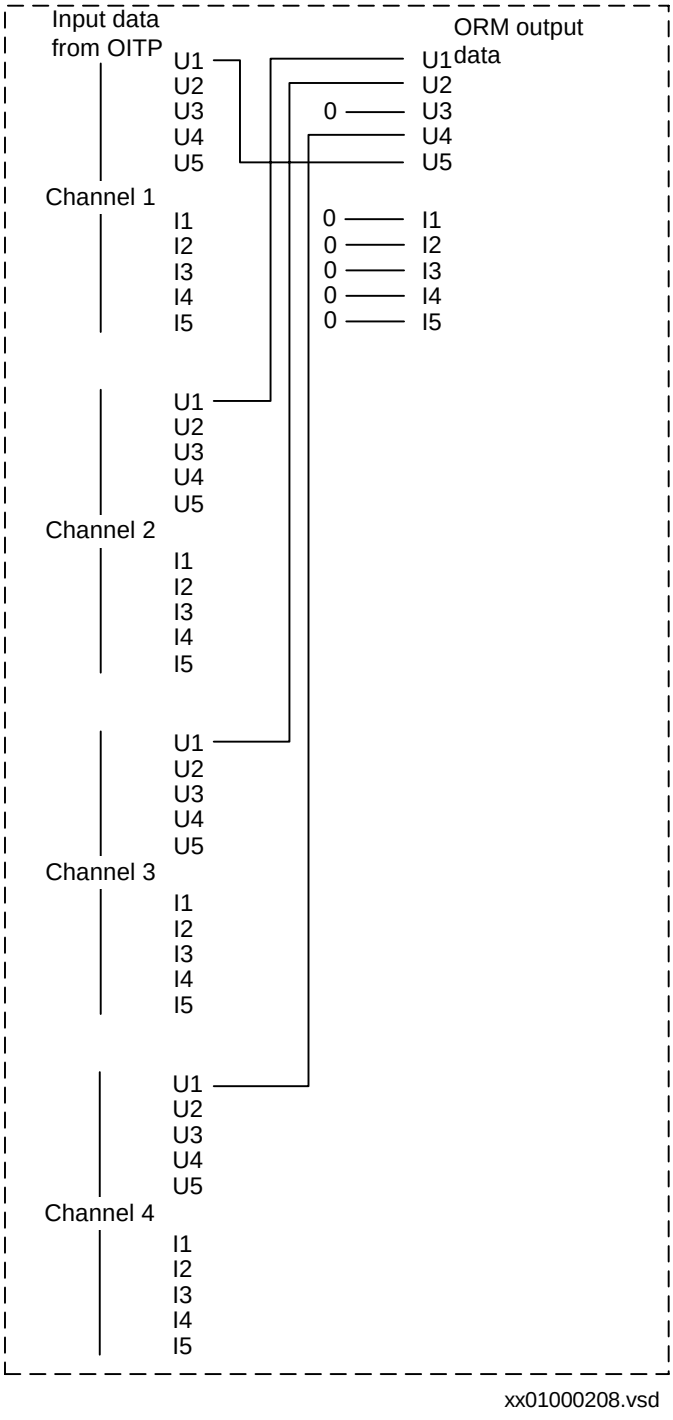


*Figure 152: Signal selection for control terminal functions*

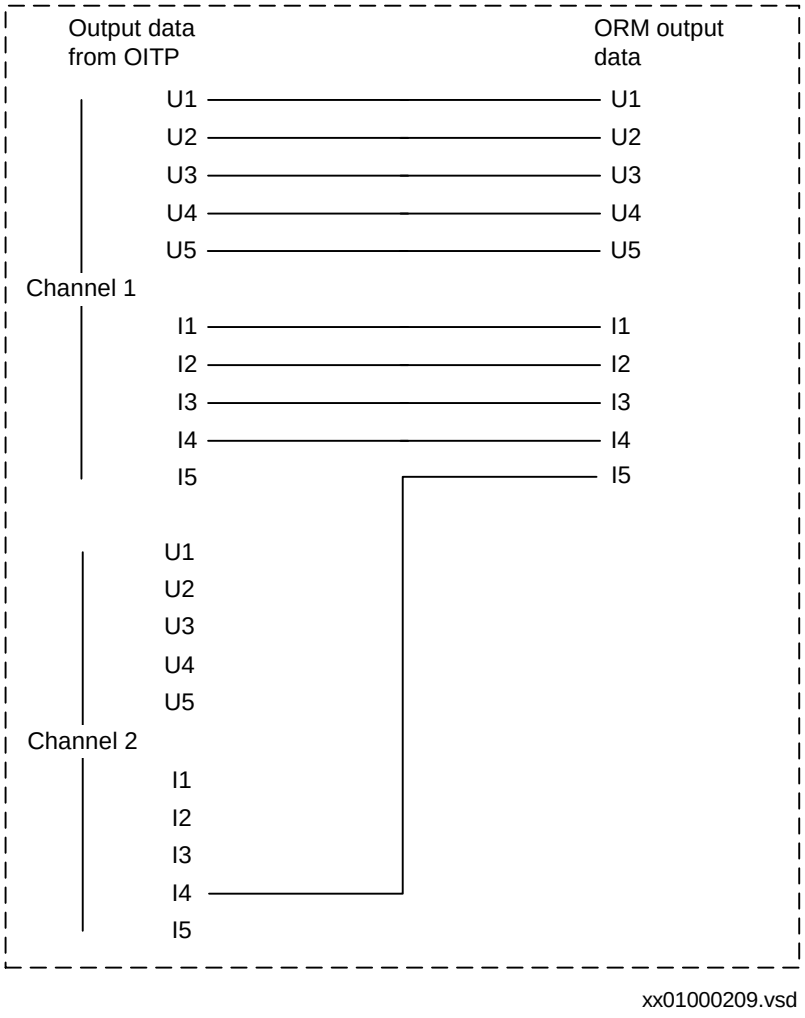


*Figure 153: Signal selection for fault locator or CTCF functions*

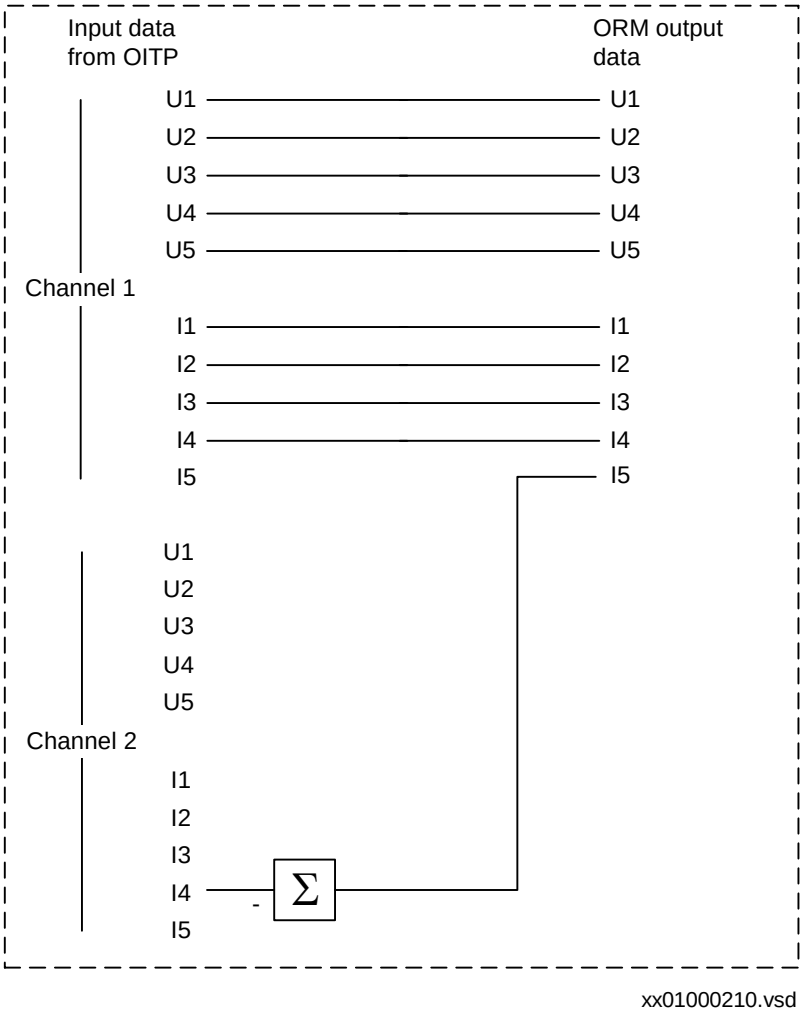


*Figure 154: Signal selection for fault locator or CTCF functions, reversed current direction channel 2*

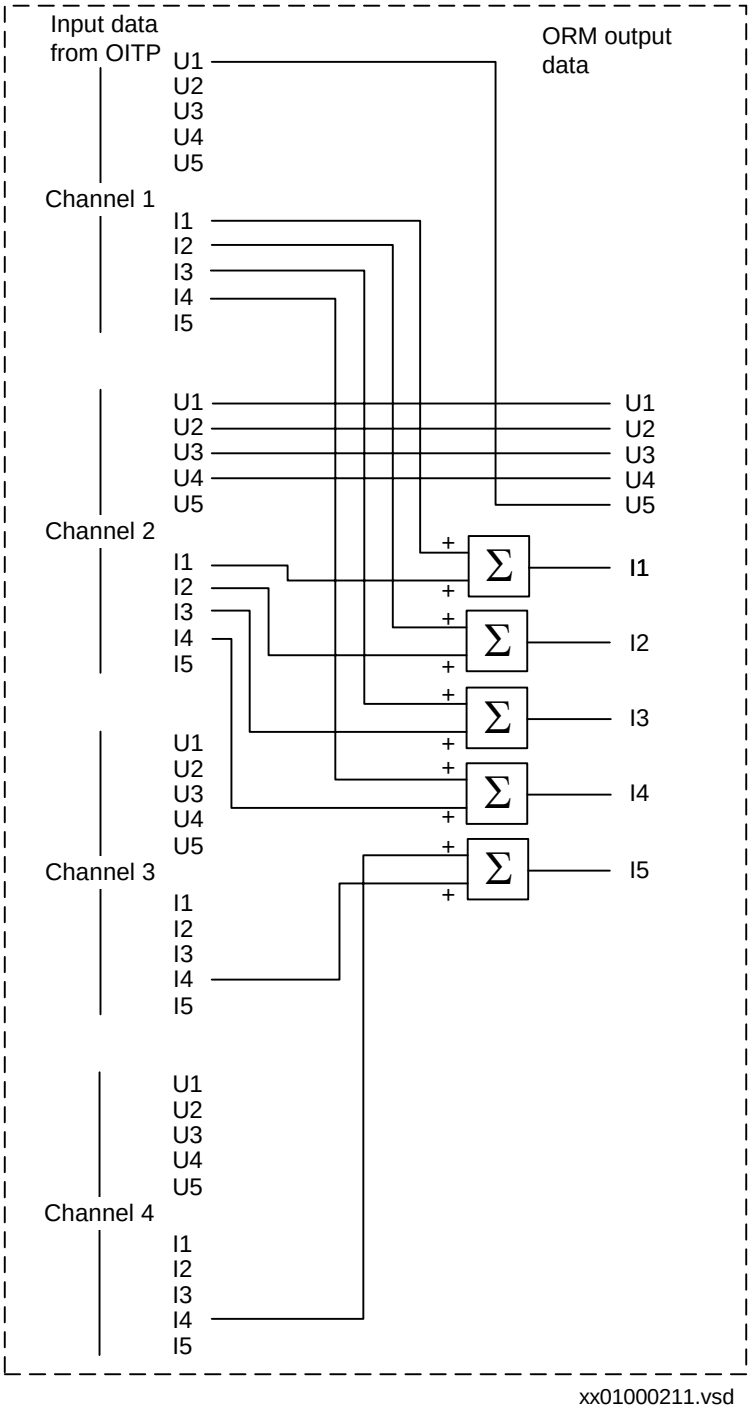


*Figure 155: Signal selection for 1 1/2 breaker switchgear*

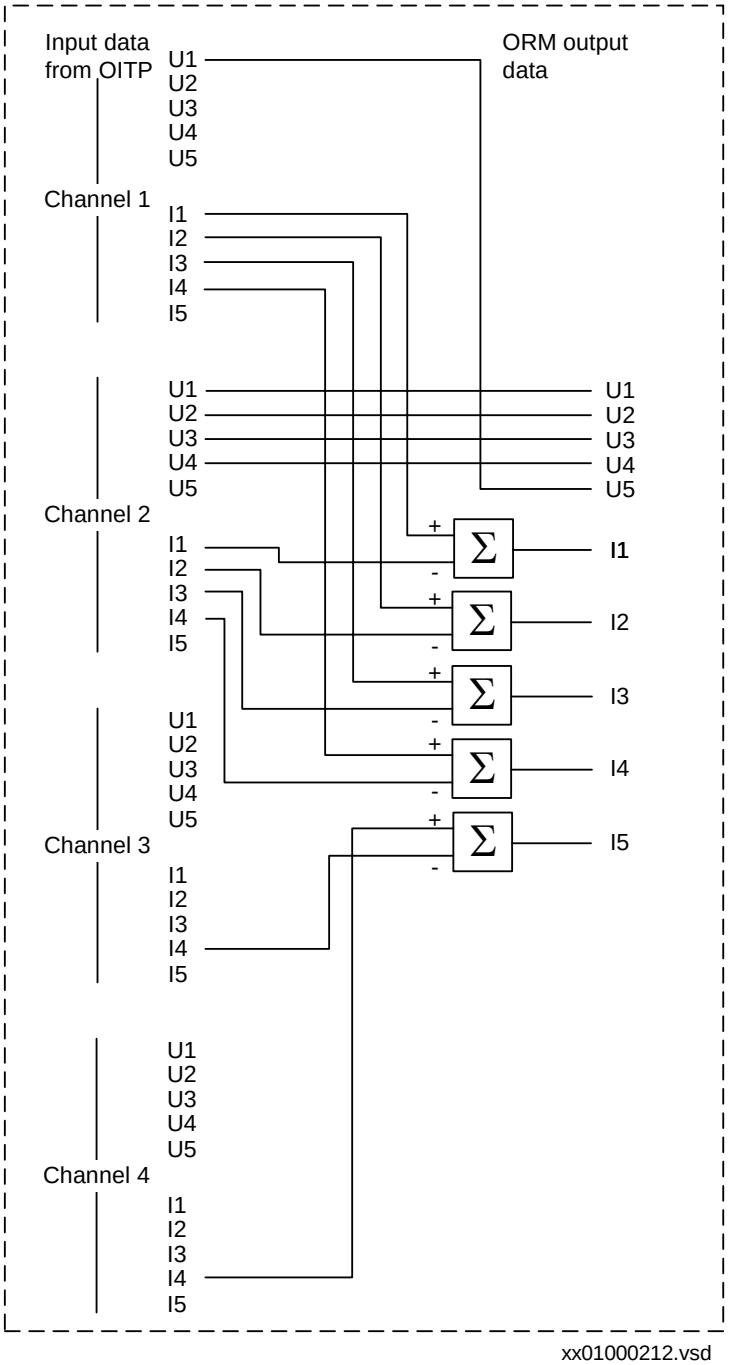


*Figure 156: Signal selection for 1 1/2 breaker switchgear, reversed current direction channel 2 and channel 3*

## 12.4 Setting parameters

**Table 387: Settings for applications supported by ORM module**

| 8-pole DIP | | | | | | | | Application | Frequency | Reverse direction, Current input |
|---|---|---|---|---|---|---|---|---|---|---|
| 1 | 2 | 3 | 4 | 5 | 6 | 7 | 8 | | | |
| x | x | x | x | x | x | | x | Straight connection | 50 Hz | - |
| | x | x | x | x | x | | x | Line terminal connection | | - |
| | x | x | x | x | x | | | Line terminal connection | | Channel 2 |
| x | | x | x | x | x | | x | Synchro check functions | | - |
| x | x | | x | x | x | | x | Control terminal functions | | - |
| | x | | x | x | x | | x | Fault locator or CTCF function | | - |
| | x | | x | x | x | | | Fault locator or CTCF function | | Channel 2 |
| x | | | x | x | x | | x | 1 1/2 breaker switchgear | | - |
| x | | | x | x | x | | | 1 1/2 breaker switchgear | | Channel 2 and 3 |
| | | | | | | | | | | |
| x | x | x | x | x | x | x | x | Straight connection | 60 Hz | - |
| | x | x | x | x | x | x | x | Line terminal connection | | - |
| | x | x | x | x | x | x | | Line terminal connection | | Channel 2 |
| x | | x | x | x | x | x | x | Synchro check functions | | - |
| x | x | | x | x | x | x | x | Control terminal functions | | - |
| | x | | x | x | x | x | x | Fault locator or CTCF function | | - |
| | x | | x | x | x | x | | Fault locator or CTCF function | | Channel 2 |
| x | | | x | x | x | x | x | 1 1/2 breaker switchgear | | - |
| x | | | x | x | x | x | | 1 1/2 breaker switchgear | | Channel 2 and 3 |
| x= DIP On | | | | | | | | | | |

## 12.5 Technical data

**Table 388: ORM - Optical receiver module**

| Function | Type |
|---|---|
| Optical connector | Type ST |

# 13 Serial communication modules (SCM)

## 13.1 SPA/IEC

Refer to chapter Data communication.

## 13.2 LON

Refer to chapter Data communication.

# 14 Data communication modules (DCM)

For more informaton about the data communication modules, refer to the previous chapter 14 "Data communication".

***Note!***

*Instructions how to configure the digital communication modules, see Chapter Configuring the digital communication modules in the Installation and commissioning manual for each product.*

# Chapter 16 Diagrams

This chapter contains the terminal diagrams for the terminal.

# 1 Terminal diagrams

## 1.1 Terminal diagram, Rex5xx

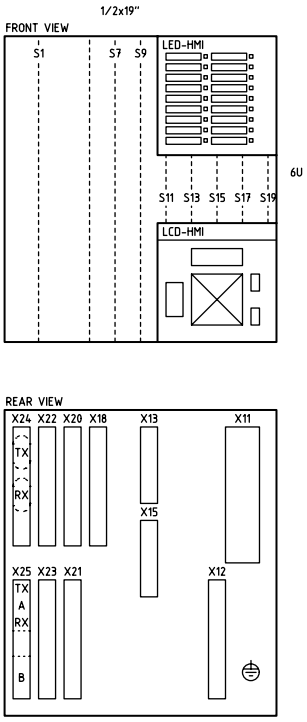


| DESIGNATION CORRESPONDING TO CASING 1/2x19" | | |
|---|---|---|
| MODULE | FRONT | REAR |
| TRM 1) | S1 | X11,12 |
| ADM 1) | S7 | - |
| MPM | S9 | X13,15 |
| PSM | S13 | X18 |
| 2) | S15 | X20,21 |
| 2) | S17 | X22,23 |
| 3) | S19 | X24,25 |

TABLE 1

1) OPTION TRM AND ADM

2) BIM, BOM, IOM AND/OR MIM

3) BIM, BOM, IOM, MIM OR DCM

en03000143.eps

*Figure 157: Hardware structure of the 1/2 of full width 19” case*

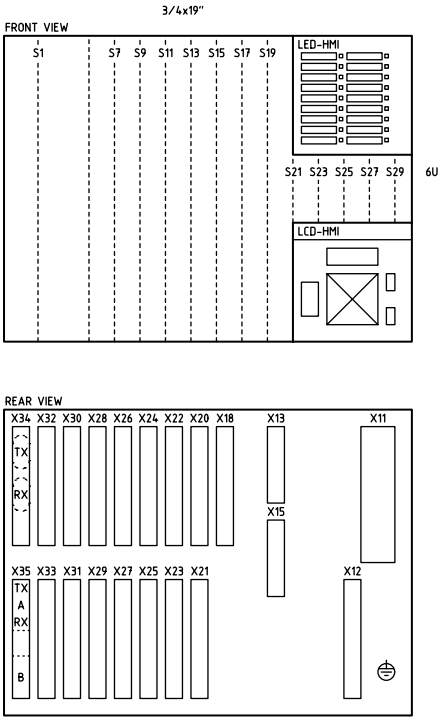


| DESIGNATION CORRESPONDING TO CASING | | |
|---|---|---|
| 3/4x19" | | |
| MODULE | FRONT | REAR |
| TRM 1) | S1 | X11,12 |
| ADM 1) | S7 | - |
| MPM | S9 | X13,15 |
| PSM | S13 | X18 |
| 2) | S15 | X20,21 |
| 2) | S17 | X22,23 |
| 2) | S19 | X24,25 |
| 2) | S21 | X26,27 |
| 2) | S23 | X28,29 |
| 2) | S25 | X30,31 |
| 2) | S27 | X32,33 |
| 3) | S29 | X34,35 |

TABLE 2

1) OPTION TRM AND ADM

2) BIM, BOM, IOM AND/OR MIM

3) BIM, BOM, IOM, MIM OR DCM

en03000144.eps

*Figure 158: Hardware structure of the 3/4 of full width 19” case*

## 1.2 Terminal diagram, Rex5xx

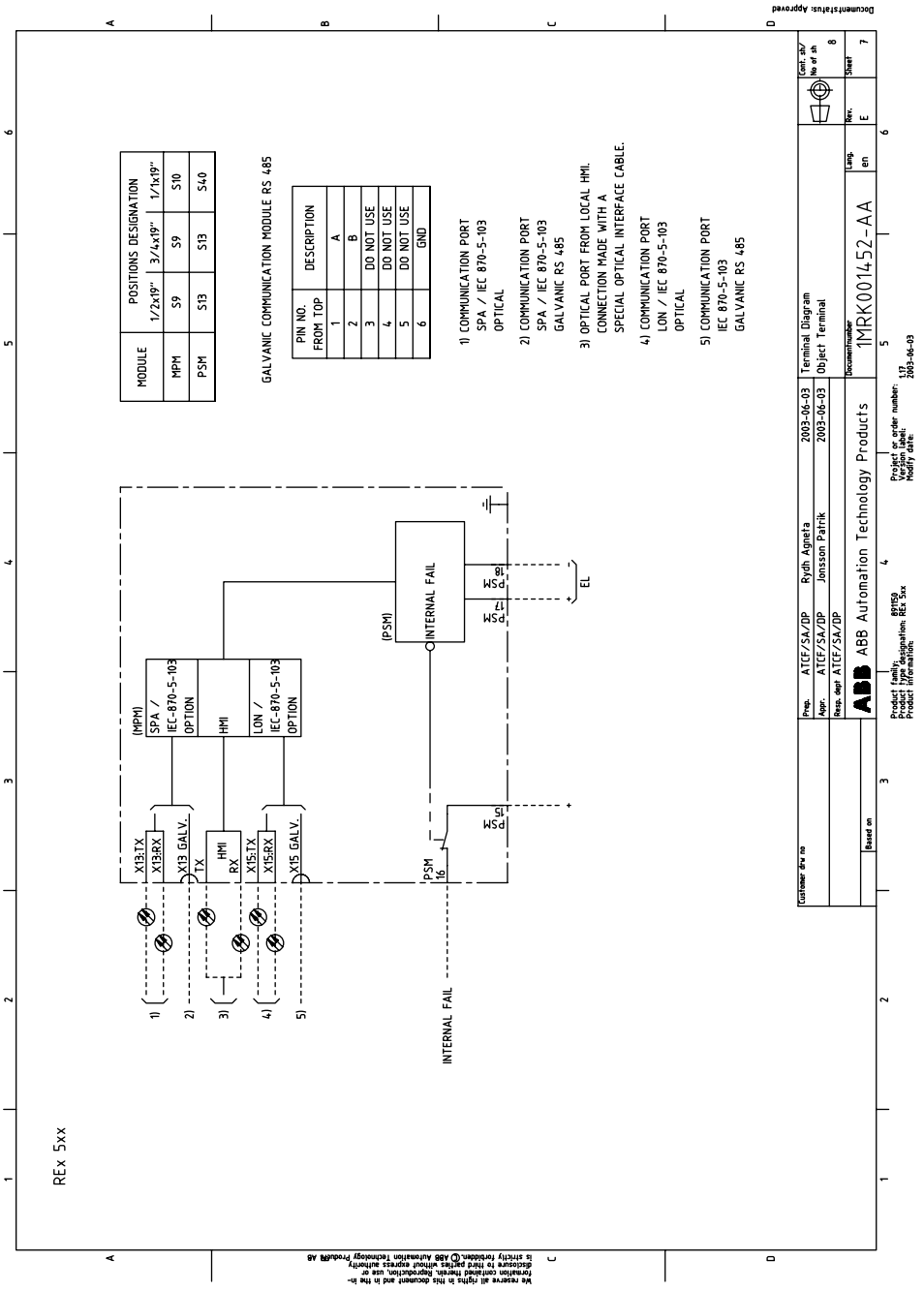


*Figure 159: REx 5xx*

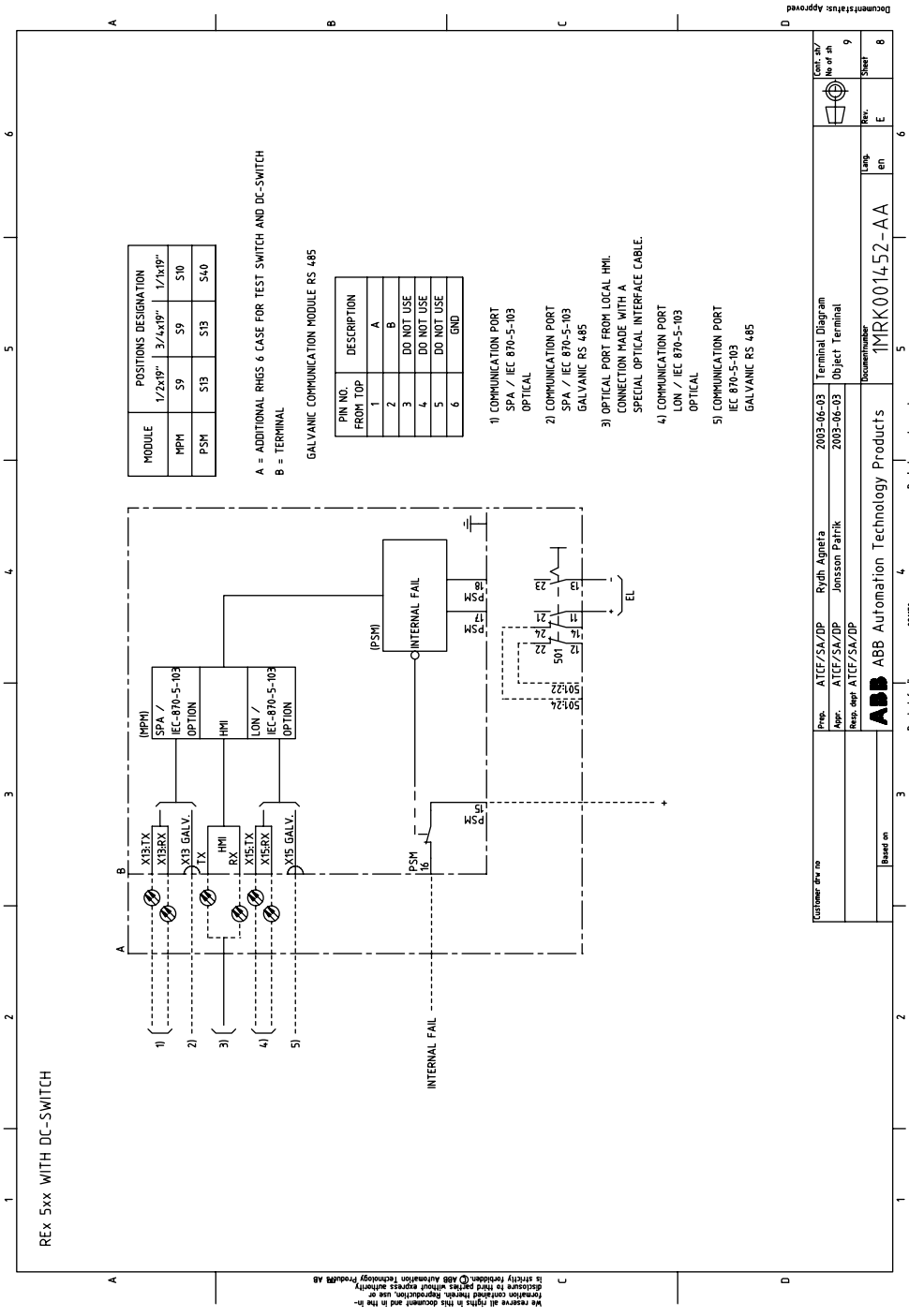


*Figure 160: REx 5xx with DC-switch*

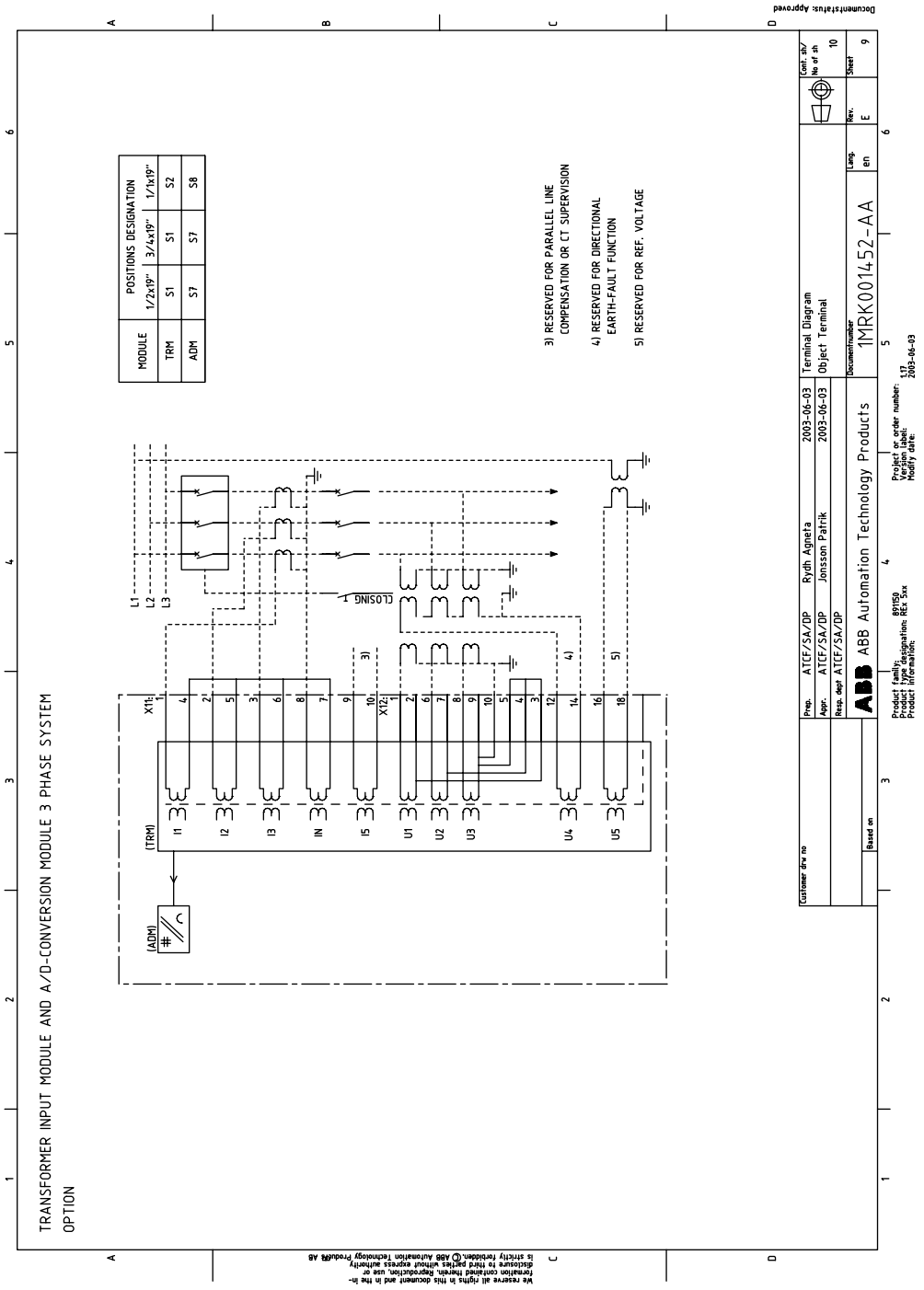


*Figure 161: REx 5xx, transformer input module and A/D conversion module 3 phase system option*

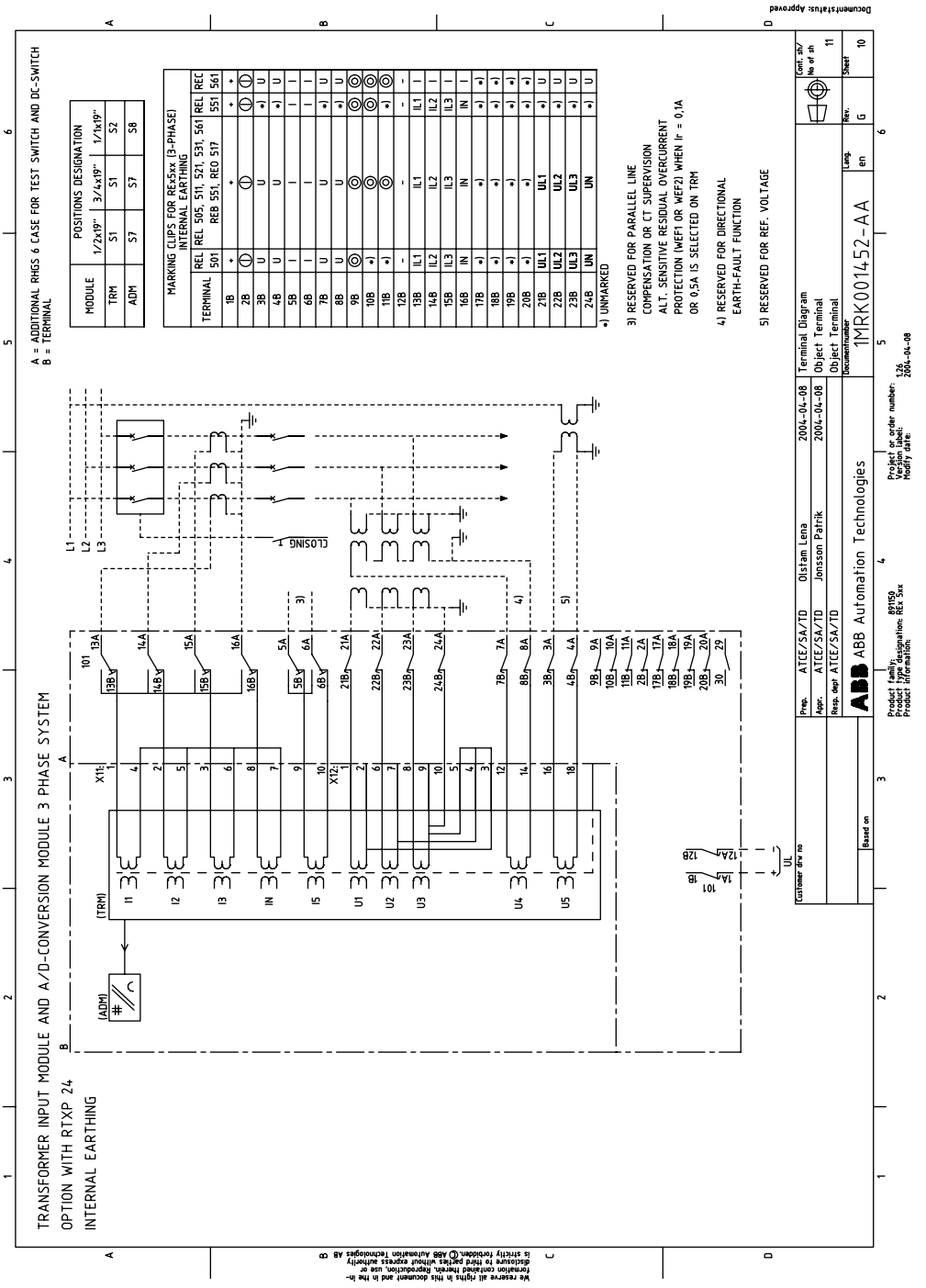


*Figure 162: REx 5xx, transformer input module and A/D conversion module 3 phase system option with RTXP 24, internal earthing*

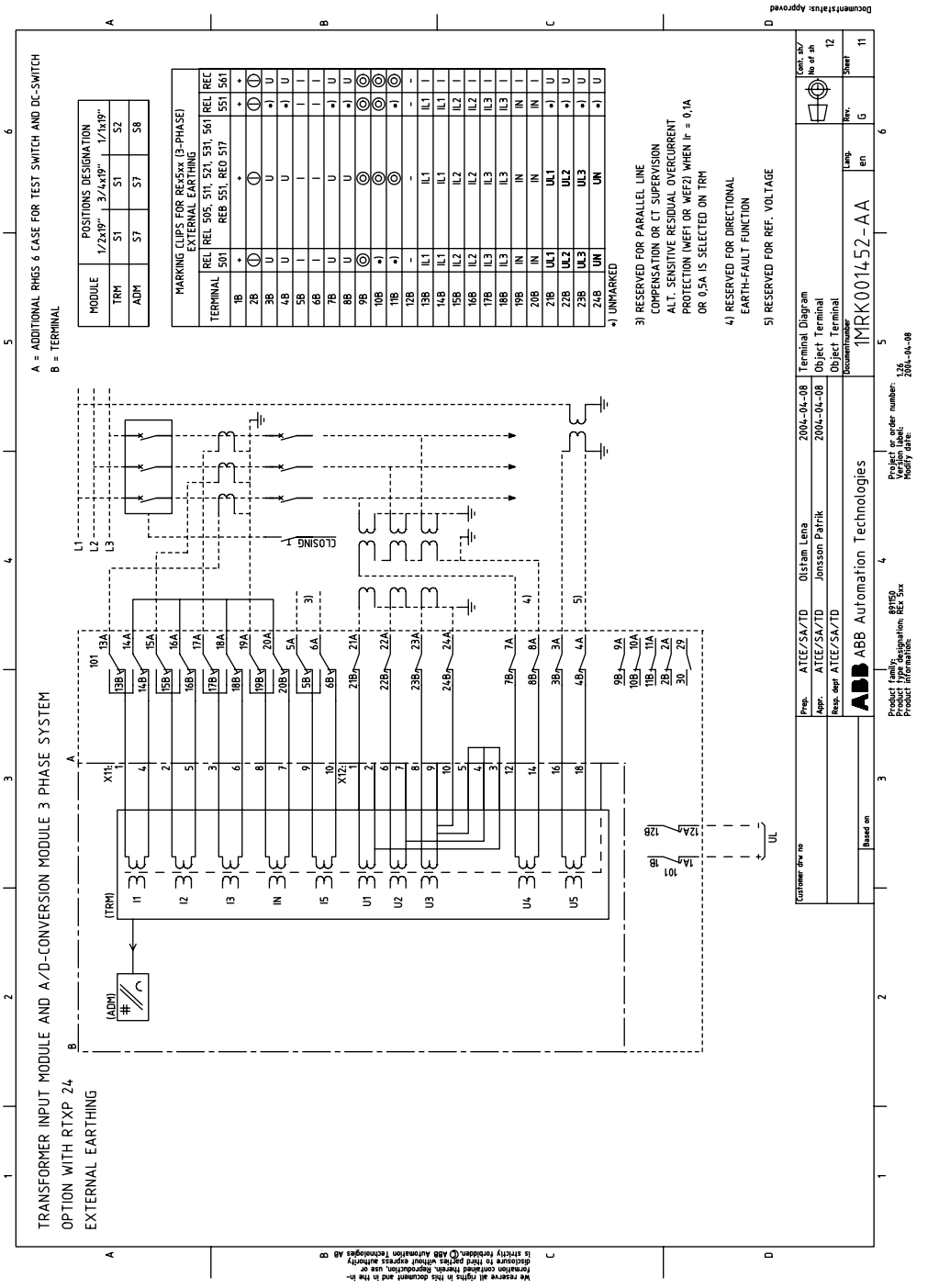


*Figure 163: REx 5xx, transformer input module and A/D conversion module 3 phase system option with RTXP 24, external earthing*

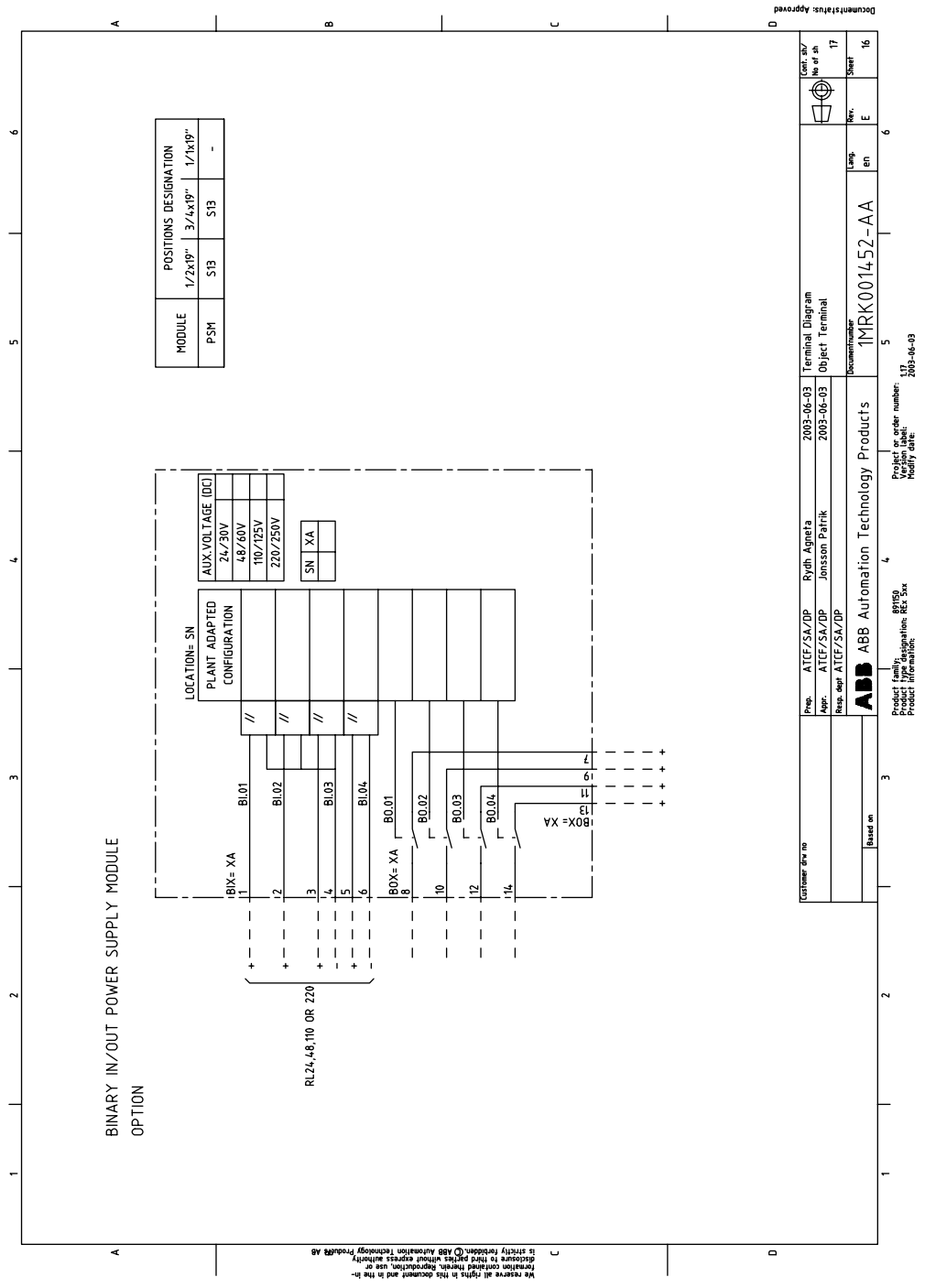


*Figure 164: REx 5xx, binary in/out power supply module option*

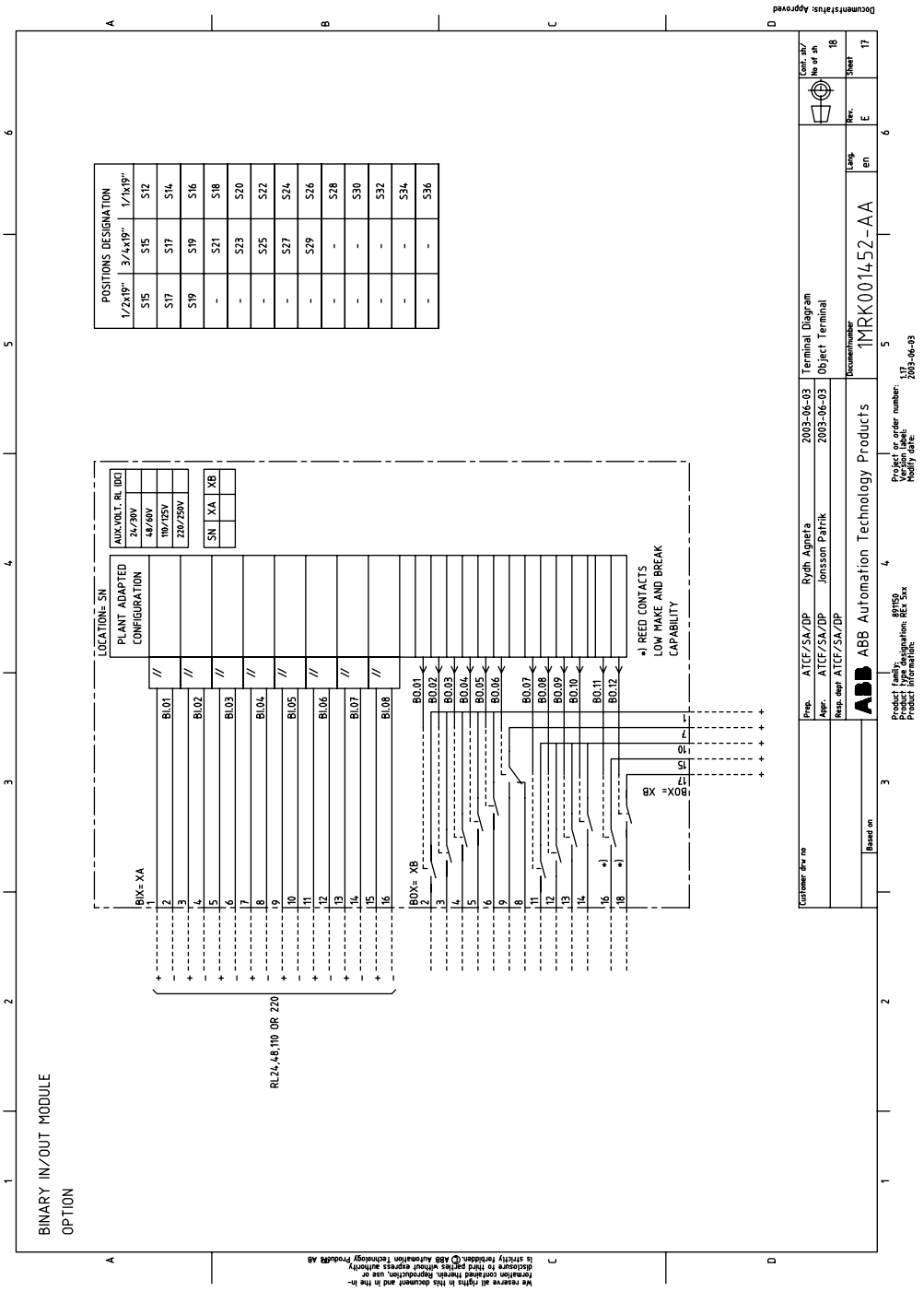


*Figure 165: REx 5xx, binary in/out module option*

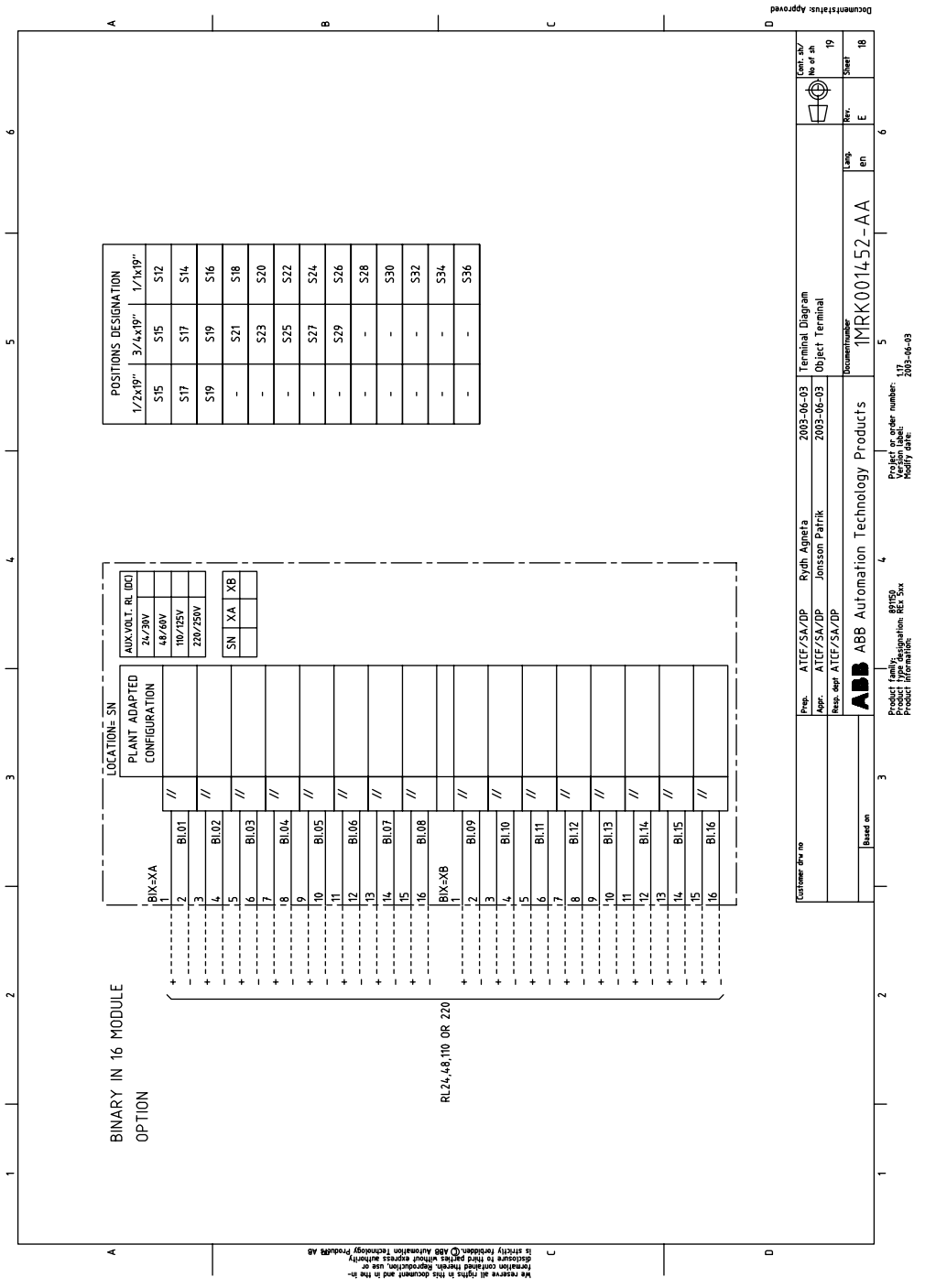


*Figure 166: REx 5xx, binary in 16 module option*

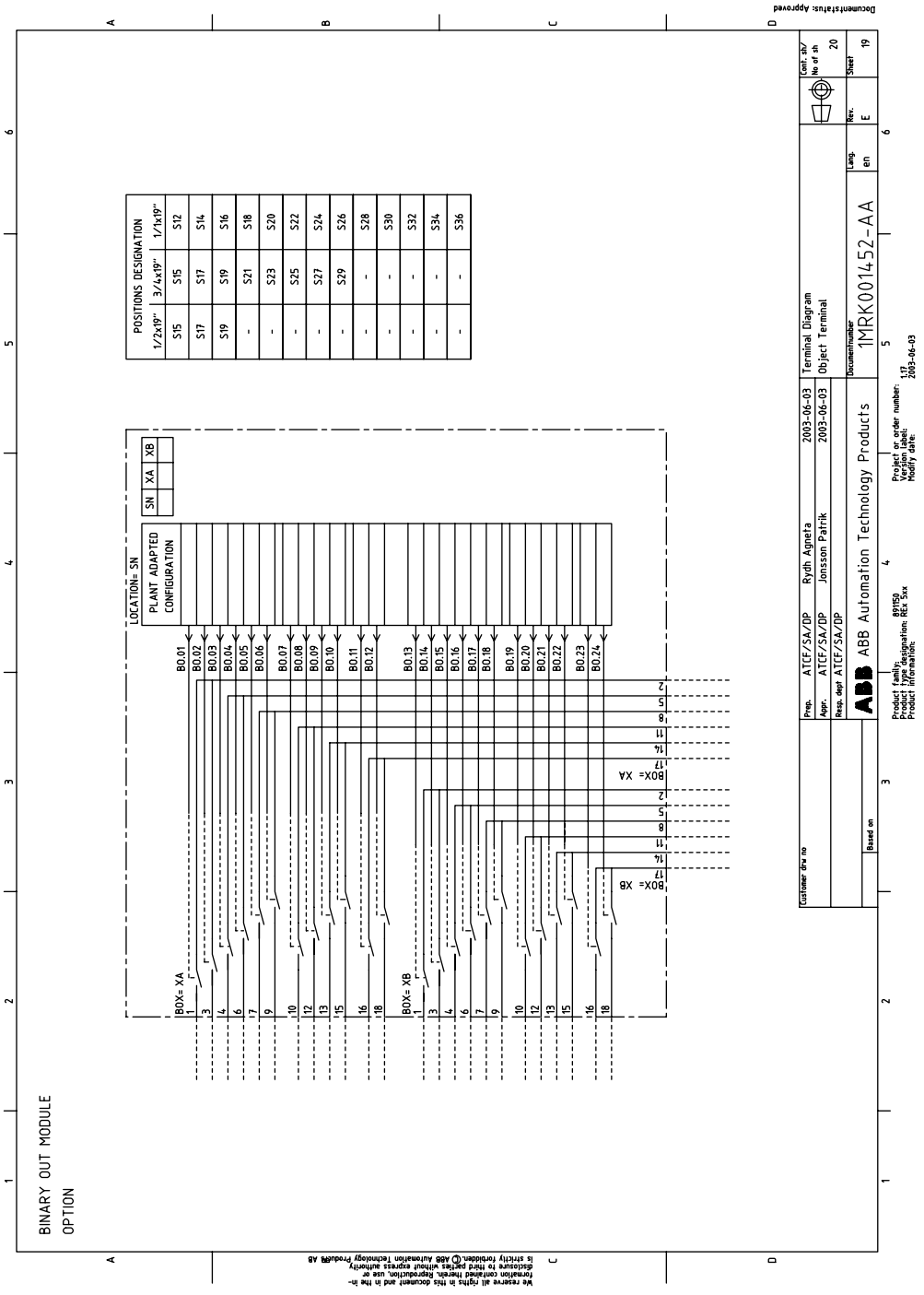


*Figure 167: REx 5xx, binary out module option*

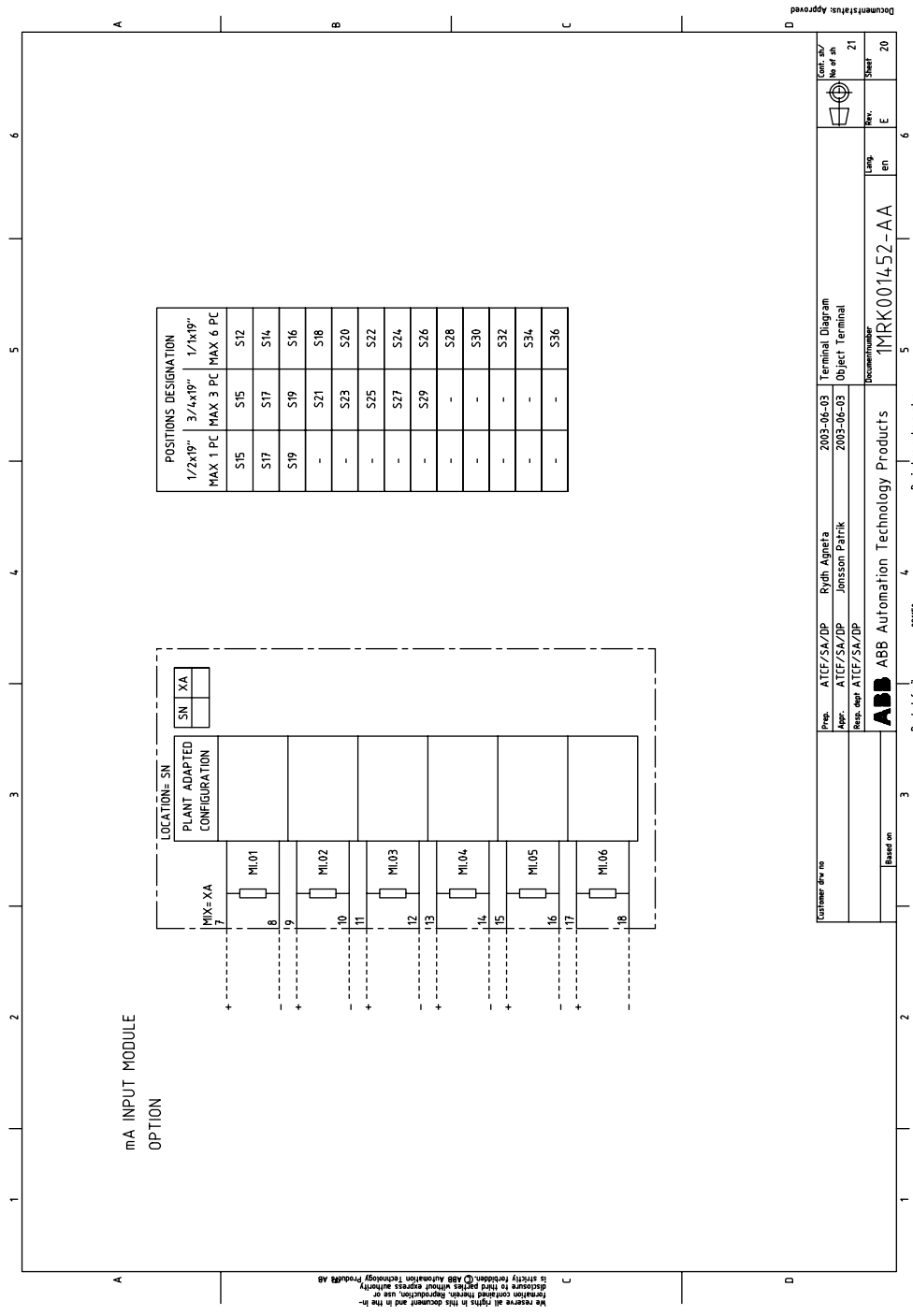


*Figure 168: REx 5xx, mA input module option*

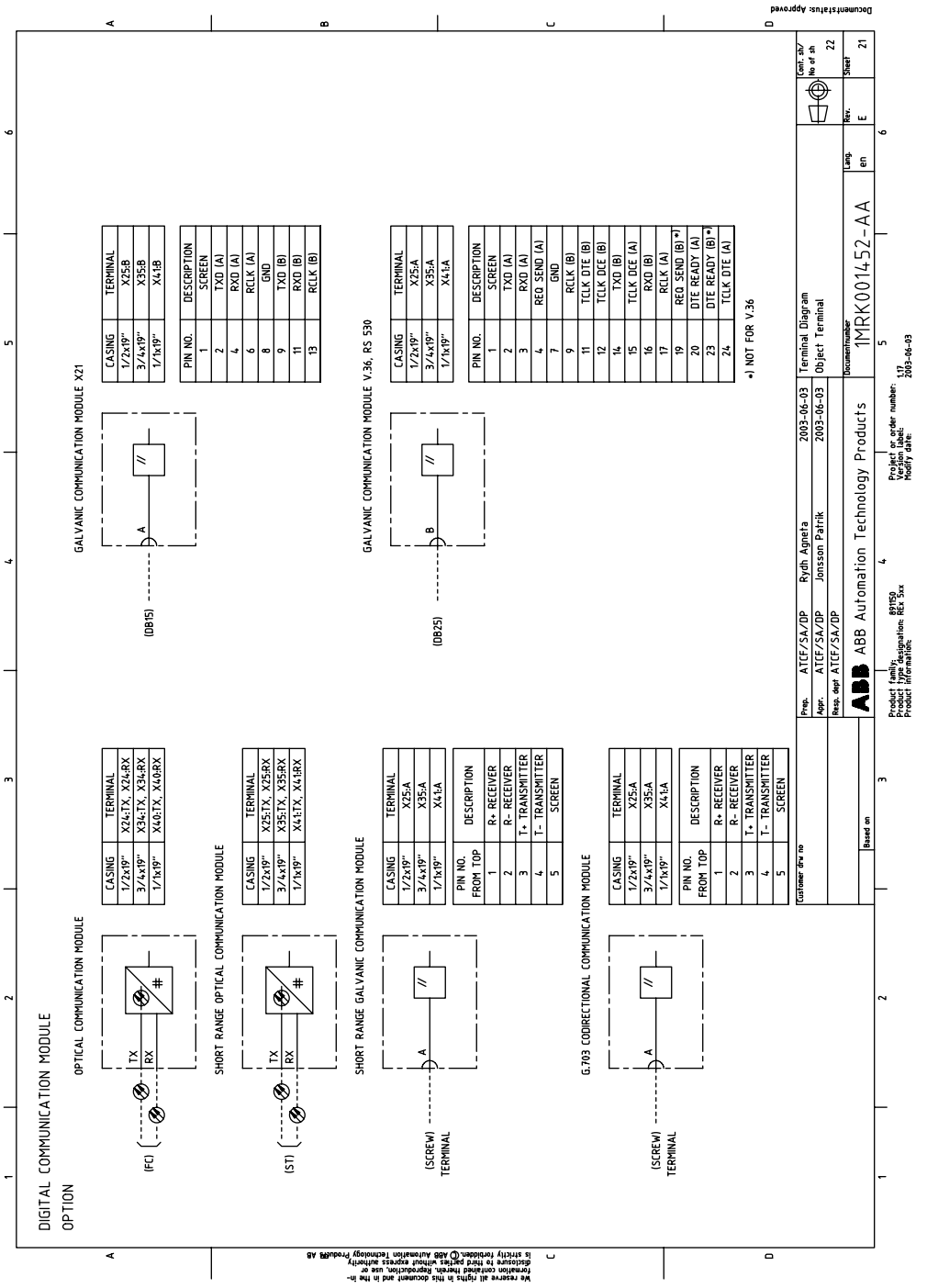


*Figure 169: REx 5xx, digital communication module option*

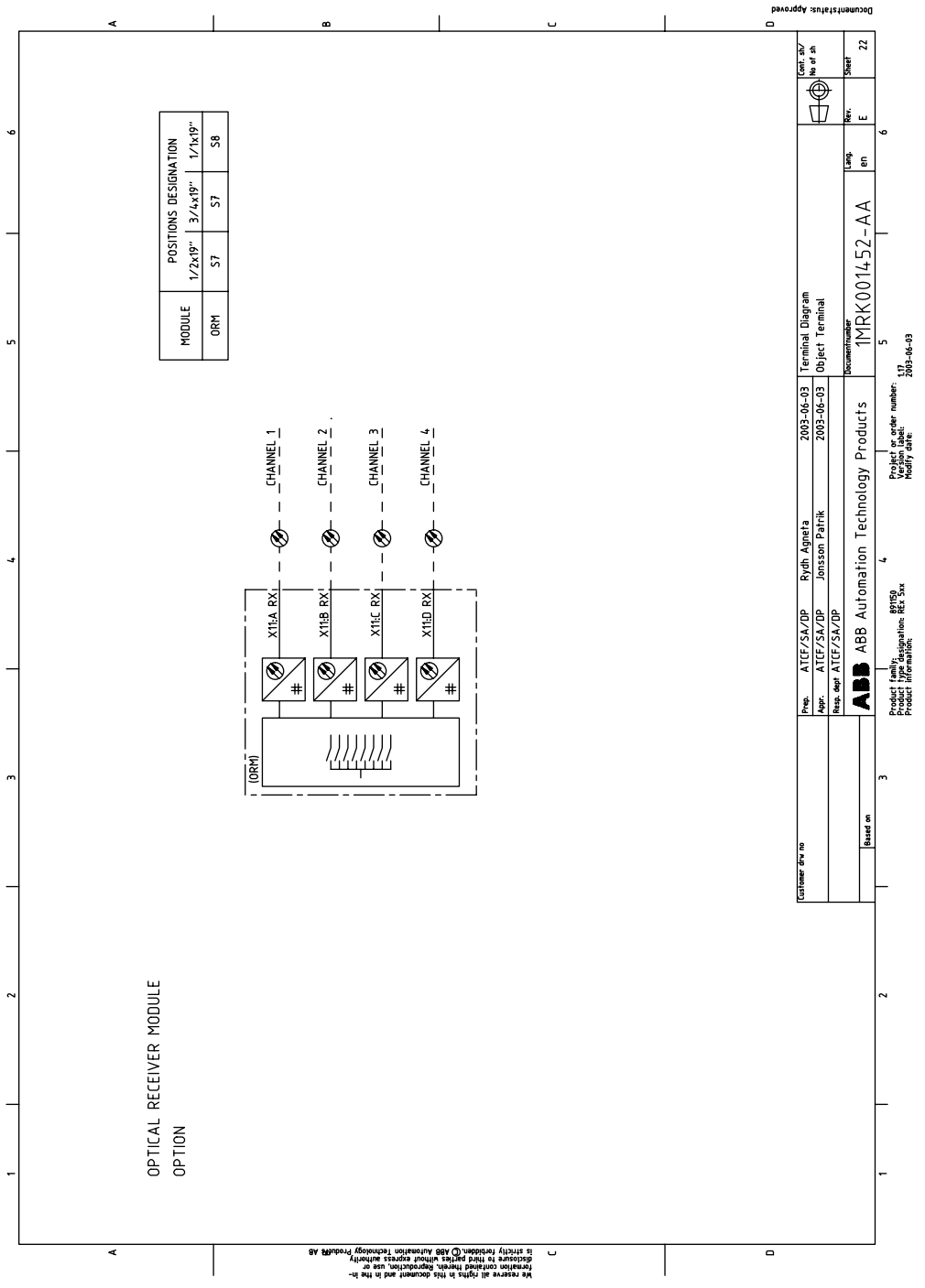


*Figure 170: REx 5xx, optical receiver module option*

1MRK 506 161-UEN

**ABB Power Technologies AB**
Substation Automation Products
SE-721 59 Västerås
Sweden
Telephone: +46 (0) 21 34 20 00
Facsimile: +46 (0) 21 14 69 18
Internet: www.abb.com/substationautomation

Printed on recycled and ecolabelled paper at Elanders Novum