ABB Automation, Inc.
Substation Automation & Protection Division
Coral Springs, FL
Allentown, PA

Instruction Leaflet
40-385.6D

Effective: February, 1999
Supersedes IL 40-385.6C
dated July, 1998

REL 300 Version 2.2X (2.20, 2.21, 2.22, 2.23) Relay System

ABB Network Partner

REL300

Relay system

For Firmware Versions
2.20, 2.21, 2.22, 2.23

REL300 REVISION NOTICE

DATE	REV. LEVEL	PAGES REMOVED	PAGES INSERTED
4/96	A	---	---
1/97	B	X, 2-14, 3-3, 3-6, 3-7, 3-8, 3-9, 3-11, 3-12, 3-14, 3-19, 3-21, 3-33, 3-44, 5-2, 6-9, 6-10, 6-11, 7-2, SD-2, SD3, SD-4, SD-5	X, 2-14, 3-3, 3-6, 3-7, 3-8, 3-9, 3-11, 3-12, 3-14, 3-19, 3-21, 3-33, 3-44, 5-2, 6-9, 6-10, 6-11, 7-2, SD-2, SD-3, SD-4, SD-5
4/98	C	Shown by change bars	Shown by change bars
2/99	D	Consolidated Versions	New Page 61

CHANGE SUMMARY:

A CHANGE BAR (**|**) LOCATED IN THE MARGIN REPRESENTS A TECHNICAL CHANGE TO THE PRODUCT.

A STAR (*) LOCATED BY THE SUB NUMBER REPRESENTS A TECHNICAL CHANGE TO THE DRAWING.

CAUTION

It is recommended that the user of REL300 equipment become acquainted with the information in this instruction leaflet before energizing the system. Failure to do so may result in injury to personnel or damage to the equipment, and may affect the equipment warranty. If the REL300 relay system is mounted in a cabinet, the cabinet must be bolted to the floor, or otherwise secured before REL300 installation to prevent the system from tipping over.

All integrated circuits used on the modules are sensitive to and can be damaged by the discharge of static electricity. Electrostatic discharge precautions should be observed when handling modules or individual components.

ABB does not assume liability arising out of the application or use of any product or circuit described herein. ABB reserves the right to make changes to any products herein to improve reliability, function or design. Specifications and information herein are subject to change without notice. All possible contingencies which may arise during installation, operation, or maintenance, and all details and variations of this equipment do not purport to be covered by these instructions. If further information is desired by purchaser regarding a particular installation, operation or maintenance of equipment, the local ABB representative should be contacted.

Trademarks

All terms mentioned in this book that are known to be trademarks or service marks are listed below. In addition, terms suspected of being trademarks or service marks have been appropriately capitalized. ABB Power T&D Company Inc. cannot attest to the accuracy of this information. Use of a term in this book should not be regarded as affecting the validity of any trademark or service mark.

IBM and PC *are registered trademarks of the International Business Machines Corporation*
WRELCOM *is the registered trademark of the ABB Power T&D Company Inc.*
INCOM *is the registered trademark of the Westinghouse Electric Corporation*

PREFACE

Scope

This manual describes the functions and features of the REL300 Relay System. It is intended primarily for use by engineers and technicians involved in the installation, testing, operation and maintenance of the REL300 system.

Equipment Identification

The REL300 equipment is identified by the Catalog Number on the REL300 chassis nameplate. The Catalog Number can be decoded by using Catalog Number Table 3-1.

Production Changes

When engineering and production changes are made to the REL300 equipment, a revision notation (SUB #) is reflected on the appropriate schematic diagram, and associated parts information.

Equipment Repair

Repair work is done most satisfactorily at the factory. When returning equipment, carefully pack modules and other units, etc. All equipment should be returned in the original packing containers if possible. Any damage due to improperly packed items will be charged to the customer.

Document Overview

The circuitry is divided into six (6) standard modules and one option module. Section 1 provides the Product Description, which includes software functions. Section 2 presents the Specifications. Section 3 presents Pilot and Non-Pilot applications with related Catalog Numbers for ordering purposes. REL300 Installation, Operation and Maintenance are described in Section 4, with related Setting Calculations in Section 5. Full Performance Tests are found in Section 6 and Acceptance/Maintenance Tests in Section 7. The Index gives a complete Index to Nomenclature. System Diagrams are included at the back of this manual.

Contents of Relay System

The REL300 Relay System includes the style numbers, listed below. Addenda pages may be included (representing future revisions).

Module	Style
• Backplane	1609C23
(Sub-Backplane Xfmr)	1498B70
• Interconnect	1611C30
• Option	1608C39
• Filter	1608C38
• Microprocessor	1611C14
• Display	1609C01
• Power Supply	1608C35

Software System

REL300 software versions 2.20, 2.21, 2.22, 2.23 are included in this I.L.

Features Included in Version V2.2X (Current Version 2.23)

The following features are ***standard*** for the Non-Pilot REL300 V2.20-V2.23:

- 3-Zone phase and ground distance relay, with reversible Zone-3 phase and ground; 4 impedance units per zone: 3 phase-to-ground; 1 phase-to-phase.
- Selectable Zone-1 extension
- Zone-1 timer (0 to 15 cycles)
- Independent timers for phase and ground (T2G, T2P, T3G, T3P)
- Inverse time directional or non-directional (selectable) ground overcurrent backup logic
- Loss of potential supervision (LOP)
- Loss of current monitoring (LOI)
- Overcurrent supervision of phase and ground distance
- Instantaneous forward directional phase and ground highset overcurrent trip (ITP and ITG)
- Close Into Fault Trip (CIFT)
- Stub Bus Protection (89b)
- Unequal-pole-closing load pickup logic
- Selectable Loss-of-Load accelerated trip logic
- Current change fault detector (ΔI)
- Voltage change fault detector (ΔV)
- Line voltage, current and phase angle monitor
- Last Fault LED now blinks once for a single fault and twice for more than one fault. When the RESET button is depressed, the flashing LED is reset, and the displayed data is returned to the Volts/Amps/Angle...metering mode. REL300 fault data memory cannot be cleared from the front panel. Fault data can be accessed by selecting Last Fault or Previous Fault Display Mode.
- Selectable polarizing for directional O/C ground units (ZSEQ/NSEQ/DUAL)
- Programmable reclose initiation and reclose block (RB) outputs; Reclose Initiate (RI2) can be enabled with the selection of:
  - 1PR for ϕG fault
  - 2PR for ϕG or $\phi\phi$ fault
  - 3PR for ϕG or $\phi\phi$ fault or 3ϕ fault
- Numerical (Digital) Processing
- Fault locator
- Self-checking software with Failure Alarm and displayed error codes
- Input contact status check for input circuits
- Push-to-close test for output contacts
- Software switches for functional tests, e.g., TK (SEND), RS1, RS2 and RS12 (Receivers)
- Trip contact sealed by trip current, with selectable dropout delay timer, 0/50 ms
- Real-time clock
- 16 fault record storage with selectable capture mode
- 16 sets of oscillographic data and intermediate target data. Each set includes 7 analog graphic inputs and 24 digital intermediate targets with 8 samples per cycle. Each analog input contains 1 prefault and 7 fault cycles
- Selectable oscillographic data capture setting trip, Z2PU, Z2Z3 or ΔV/ΔI.
- Selectable Data Capture Setting (FDAT) - TRIP, Z2PU/TRIP, Z2Z3/TRIP
- Logic for load restrictions
- Selectable phase sequence rotation of ABC or ACB
- Out-of-Step block logic

Features Included in Version V2.2X

The following features are ***standard*** for the Pilot REL300 V2.20-V2.23:

- All features listed as standard for the Non-Pilot REL300 V2.21 are included in the Pilot system
- Independent pilot phase and ground distance units
- Complete Logic and Channel Interface for:
  - Permissive Overreach Transfer Trip (POTT) / Simplified Unblocking
  - Permissive Underreach Transfer Trip (PUTT)
  - Directional Comparison Blocking Scheme (BLK)
  - POTT or Simplified Unblocking Weakfeed
- Instantaneous Forward Directional Overcurrent Function for High Resistance Ground Fault Supplement to Overreach Pilot, with adjustable timer (from 0 to 15) in 1 cycle steps or Block
- Instantaneous Reverse Directional Overcurrent Ground Function
  - Carrier Ground Start on Blocking Scheme
  - Weakfeed System Application
- Reclose Block on Breaker Failure (BF) Squelch
- 3-Terminal Line Application
- Weakfeed Trip

Features Included in Version V2.2X

The following features are ***optional*** for the Non-Pilot ***and*** the Pilot REL300 V2.20-V2.23:

- Choice of rear communications port options:

  RS-232C W/IRIG-B PONI
  RS-232C PONI or
  INCOM® PONI
- Optional graphic software program (OSCAR)
- Built-in FT-14 test switches
- Optional Programmable Output Contacts. Eight additional contacts chosen from 30 functions.
- Single-Pole-Trip (SPT) logic and outputs:
  - SPT/RI1 on first ϕGF and 3PT on other fault types.
  - 3PT/RB if reclosing on a permanent fault.
  - 3PT/RB if second phase(s) fault during single phasing.
  - 3PT on a time delay limit (0.35-5.0 sec in 0.05 sec steps) if the system fails to reclose (62T).
- Setting options for TRIP/Reclose Initiate (RI) mode selector:

TTYP SET AT	TRIP	RI
OFF	3PT	NO
1PR	3PT	RI2 (ϕG)
2PR	3PT	RI2 (ϕG, ϕϕG)
3PR	3PT	RI2 (ϕG, Mϕ)
SPR	SPT (ϕG)	RI1
	3PT (Mϕ)	N0
SR3R	SPT (ϕG)	RI1
	3PT (Mϕ)	RI2

SPT	=	Single Pole Trip
3PT	=	3 Pole Trip
RI	=	Reclose Initiate
RB	=	Reclose Block
RI2	=	3 Pole Reclose Initiate
RI1	=	Single Pole Reclose Initiate
ϕG	=	Single Phase-to-Ground Faults
Mϕ	=	Multi-Phase Faults
ϕϕ	=	2-Phase Faults

REL 300 Firmware Revision History for Version 2.2X
Significant Changes to Version V2.20 from V2.10
(For customers who are familiar with Version 2.00 and beyond)

Please refer to system drawing 2865F41 Sub 2, in I.L. 40-385.4 and drawing 2693F60 in I.L. 40-385.6 for the following changes.

1. GENERAL APPLICATION UPGRADES
   a. a)CIF trip logic – Added a timer 200/0 between OR222A and AND22 by changing the setting of CIF selection, e.g., the CIF trip with or without the timer is now determined by user. Refer to section 3.4.7 for the new settings and application.
   b. b)Added an adjustable T1 timer from 0 to 15 cycles in one-cycle steps.
   c. c)Changed the setting ranges of PANG and GANG from 40-90 to 0-90 degrees and ZR setting from 0.1-7.0 to 0.1-10.0 for underground cable application.
   d. d)Changed LOPB setting from NO/YES to NO/DIST/ALL, i.e., added a setting “ALL” to block trip for LOP condition. The setting of LOPB=DIST is equivalent to “YES”, i.e., block the distance units only.
   e. e)Added PTRI setting (YES/NO) to control the pilot reclose.
   f. f)Added an OR62E gate between the signal T1RI and switch Z1RI for Zone-1 and IT reclose. The OR62E has three inputs – ITP, ITG and T1RI.
   g. g)Correct the GB trip target error if the input trip currents are removed instantly after the closure of the trip contacts.
   h. h)Improved Phase Selector for single-pole trip with load current condition.
   i. i)Added NOT logic selection in programmable contact outputs.
   j. j)Improved the sensitivity of FDOG and RDOG from 3V0 > 1 volt to 3V0 > 3 volts.
   k. k)Can use the pre-fault phase voltages (FDOP) to supervise the Zone-1 and pilot trip for 3-phase fault condition.
2. POTT SYSTEM IMPROVEMENTS
   l. a)Added a path and an inverter between the output of OR16 and the input of AND45A. Removed the path between the TBM timer (0/50) and AND45, and added a path and inverter between the TBM timer & AND34. The TBM is now reset after the PLTG or PLTP picks up for three cycles.
   m. b)Added a path from AND30A (PILOT) to the input of AND65A, i.e., the weakfeed application is for POTT scheme only.
   n. c)Changed the input of AND49A and AND49E from TRSL to TRSLA (TRSLB or TRSLC for single-pole trip and keying application).
3. BLOCKING SYSTEM APPLICATIONS
   o. a)Carrier keying logic was modified to speed up resetting TBM for certain types of evolving faults by changing the input of AND24 from HST to TRSLA/TRSLB/TRSLC.
4. SINGLE-POLE TRIP LOGIC
   p. a)Changed the faulty phase voltage from 0 to the pre-fault voltage after the single-pole trips.
   q. b)Added a negated X2 to disable the LOIB logic and allows the 62T trip under the pole disagreement condition.
5. SELF-CHECK
   r. a)A self-test was added to indicate the opto-input status in the test mode.

Significant Changes to Version V2.21 from V2.20

1. Changed 3V0 from 3V to 1 Volt for the directional units in order to increase the sensitivity for zone-2 and zone-3 applications.
2. Changed the RDOG timer from 16/0 to 33/0 ms. For a 3-phase fault at 0% location, the RDOG may pick up momentarily and may start the TBM (carrier keying); therefore, it may delay the pilot trip action.

   NOTE: For the pilot application, the setting of FDGT must be greater than 3 cycles.
3. Changed the LOIB timer from 0.5/0.5 to 10/0.5 seconds in order to prevent the block of Z2G, Z3G and GB tripping if the settings of T2G and/or T3G are greater than 0.5 seconds.
4. Changed the LOPB logic by removing AND1G. See Figure 3-10c
5. Corrected the angle display for the 1-amp ct application. Now, the angle display is extended from 50% to 10% of the ct rating.
6. Corrected the computation for 3-ph fault by zeroing KI0.
7. Reduced the pickup and dropout timing errors of the PCO-4 and PCO-8 timers and limited the tolerance to within 1 cycle of the setting values.

Significant Changes to Version V2.22 from V2.21

1. The following changes impact the directional units operation and there thresholds.
   a. Current polarization ($3I_0$ & lp), of the ground directional unit, is used if the directional settting is Dual Polarizing (DIRU = “DUAL”) and the polarizing current lp is greater than 1.0 amps.
   b. Voltage polarization ($3V_0$ & $3I_0$), of the ground directional unit, is used as backup for the Dual Polarizing, described in a., when the polarizing current lp is less than 1.0 amps.
   c. The directional supervision for ground overcurrent, when using loss of potential protection, is based on the magnitude of the polarizing current. For the settings of LOPB = DIST and DIRU = DUAL, with lp greater than 1.0 amps, the directionality of ITG and GB is determined by current polarization (lp & $3I_0$). For the same settings, with lp less than 1.0 amps, ITG and GB are non-directional.
2. Changed LOP logic by adding lm supervision on gate OR1A. For time delay trip units (zone-2, zone-3, etc.) in V2.21, the LOP might block the trip on a 3-phase fault if all fault voltages (V_a, V_b and V_c) were less than 7 volts.

NOTE: The I_m must be set at the value higher than the load current in order to operate the LOPB logic properly.

3. Changed the software routine for TRSL. Set the TRSL if the HST operated. For some cases in V2.21, the HST tripped the relay then dropped out before TRSL set; therefore, the targets were not recorded.
4. Added a dropout delay of 8 ms (timer 50/8)for the RX1 or RX2 (BLK system only) if the carrier receive signal was present for 3 cycles (50 milliseconds) or longer. This logic change overcame the problem that the RCVR input might drop out momentarily due to the external fault clearing noise.

Significant Changes to Version V2.23 (from V2.22)

1. LOP logic were changed as follows:
   a. (a)Removed the I_m supervision from the gate OR1A. For the V2.22, the LOPB circuit will not block the trip under the LOP condition if the setting of I_m is lower than the load current.
   b. (b)Added a dropout delay timer (0/16) between AND223 and OR221 in order to seal-in the AND220. For the V2.21 or older versions, the time delay trip units (zone-2, zone-3 and GB) might be blocked by the LOP logic on a 3-phase fault with all fault voltages (V_a, V_b, V_c) below 7 volts.
   c. (c)Added an inverted LOP (0/500) to supervise the AND220. This means the distance units will be blocked for 500 ms after the LOPB condition is removed.
2. Added a transient block ITG timer of 2 cycles if a forward fault occurs immediately after a reverse fault to avoid the false trip during the clearing of the reverse fault.

IMPORTANT APPLICATION NOTES

1. PILOT SYSTEM

   a. a)The setting of Z3FR must be set to “REV” for system transient block and unequal pole external fault clearing.

   b. b)The minimum setting of FDGT should be 3 cycles unless for some special application.

   c. c)Refer to section 3.4.7 for the setting of CIF if two REL300 relays control a single breaker and share a common 52b output.

2. LOAD LOSS TRIP (LLT)
   For a system, if its maximum tapped load exceeds minimum through-load in the protected line, the setting of LLT should be set to “NO”. Refer to section 3.4.9 for the detailed information.

3. PHASE ROTATION
   Check JMP-3 on the Microprocessor module. Position JMP-3 is used for ACB rotation if a jumper is placed. Normally JMP-3 should be out for a system with phase rotation ABC.

4. THREE-POLE TRIP OR PROGRAMMABLE CONTACT OUTPUTS
   Check JMP2, and it should be in the 1-2 position.

5. SINGLE-POLE TRIP
   Check JMP2, and it should be in the 2-3 position.

6. PANG, GANG and ZR SETTINGS
   The settings of PANG and GANG have been expanded from 40-90 to 0-90 degrees and the ZR setting has been changed from 0.1-7.0 to 0.1-10.0 for underground cable application. The setting rule of PANG, GANG and ZR must be followed: if the setting difference of PANG and GANG is greater than 50 degrees or the ZR setting is greater than 7.0, the operating range of the maximum fault current should be limited to 200 amperes; otherwise, the microcontroller may give an un-predicted result.

NOTE: CONVERSION FROM REL300 FIRMWARE VERSION V2.0x/V2.1x/2.2x to V2.23 CAN BE ACCOMPLISHED AS FOLLOWS:

4. Standard precautions of static voltage discharges should be observed such as using a grounded wrist strap when handling Integrated Circuits.

5. Remove chips U103, U104, and U202 (for V2.0x/2.1x only) from the Microprocessor module.

6. Replace chips U103 (G17) and U104 (G18) and U202 into the sockets.

7. Check Jumper #3 on Microprocessor module for rotation ABC or ACB system which is shown on the Metering mode. Normally, JMP3 should be “OUT” for ABC system. Spare jumpers should be placed on locations JMP10, 11 or 12. Remove any spare jumper (JMP10, 11 or 12) and replace it to JMP3 position for ACB system.

8. Check Jumper #2 on Microprocessor module. Position 2-3 is used for single-pole trip logic only and position 1-2 is used for three-pole trip or programmable output contact logic.

9. Reprogram REL300 password through INCOM® remote communication.

10. It is recommended to verify the relay’s operation per Section 2 of Appendix H (Acceptance/Maintenance Tests).

TABLE OF CONTENTS

Starting PAGE NO.

Section 1. PRODUCT DESCRIPTION- -1

1.1 INTRODUCTION - 1

1.2 REL300 CONSTRUCTION - 1

1.3 REL300 MODULES - 2

1.3.1 Backplane Module - 2

1.3.2 Interconnect Module - 2

1.3.3 Option Module/Contact Module - 3

1.3.4 Filter Module - 3

1.3.5 Microprocessor Module - 3

1.3.6 Display Module - 3

1.3.7 Power Supply Module - 4

1.3.8 Contact Outputs- 4

1.4 TEST ACCESSORIES - 4

1.5 FAULT DETECTION SOFTWARE - 4

1.5.1 Background Mode- 5

1.5.2 Fault Mode and Restricted Fault Tests - 5

1.5.3 Unique Qualities of REL300 - 6

1.6 SELF-CHECKING SOFTWARE - 6

1.7 UNIQUE REMOTE COMMUNICATION PROGRAM (RCP) - - - - - - - - - - - - - - - - - - 7

1.8 POWER SYSTEM ROTATION ABC OR ACB SELECTION - - - - - - - - - - - - - - - - - - 7

Section 2. SPECIFICATIONS - 11

2.1 TECHNICAL -11

2.2 EXTERNAL CONNECTIONS- -11

2.3 CONTACT DATA -12

2.4 MEASUREMENTS -12

2.5 MEASUREMENT UNITS -12

2.6 SETTING RANGES -13

2.7 GROUND/ PHASE OVERCURRENTS AND UNDERVOLTAGE UNITS - - - - - - - - - - - - -13

2.8 OPTIONAL SINGLE-POLE-TRIP LOGIC AND OUTPUTS - - - - - - - - - - - - - - - - - -14

2.9 OPTIONAL PROGRAMMABLE OUTPUT CONTACTS -14

2.10 OUT-OF-STEP BLOCK -14

Starting PAGE NO

2.11 SELECTABLE PHASE SEQUENCE ABC OR ACB ROTATION - 15
2.12 OPTIONAL COMMUNICATION INTERFACE - 15
2.13 CHASSIS DIMENSIONS AND WEIGHT - 15
2.14 ENVIRONMENTAL DATA - 15
2.15 YEAR 2000 - 15

Section 3. APPLICATIONS AND ORDERING INFORMATION - - - - - - - - - - - - - - - - - - - 25

3.1 NON-PILOT SYSTEM - 25
3.2 LINE MEASUREMENT TECHNIQUES - 25
3.2.1 Single-Phase-to-Ground - 26
3.2.2 Three-Phase - 26
3.2.3 Phase-to-Phase - 27
3.3 MEASUREMENT ZONES - 27
3.3.1 Zone 1 Trip - 27
3.3.2 Zone 2 Trip - 28
3.3.3 Zone 3 Trip - 28
3.3.4 Zone 1 Extension - 29
3.4 REL300 NON-PILOT FEATURES - 30
3.4.1 3-Zone Distance Phase and Ground Relay with Reversible Zone 3 Phase and Ground - - - 30
3.4.2 Directional or Non-Directional Inverse Time Overcurrent Ground Backup Unit - - - - - - 30
3.4.3 Loss of Potential Supervision (LOP) - 30
3.4.4 Loss of Current Monitoring (LOI) - 31
3.4.5 Overcurrent Supervision - 31
3.4.6 Instantaneous Forward Directional Overcurrent Trip/Highset Trip Logic - - - - - - - - - 32
3.4.7 Close-Into-Fault Trip (CIFT) and Stub-Bus Protection (SBP) Logic - - - - - - - - - - - - 32
3.4.8 Unequal-Pole-Closing Load Pickup Logic - 33
3.4.9 Selectable Loss-of-Load Accelerated Trip Logic (LLT) - - - - - - - - - - - - - - - - - - - 34
3.4.10 Current or Voltage Change Fault Detector (DI, DV) and GS - - - - - - - - - - - - - - - - 34
3.4.11 Selectable Ground Directional Unit (ZSEQ/NSEQ/DUAL) - - - - - - - - - - - - - - - - - - 35
3.4.12 Instantaneous Forward Directional Overcurrent Unit (FDOG) and Phase Unit (FDOP) - - - 35
3.4.13 Instantaneous Reverse Directional Overcurrent Ground Function (RDOG) - - - - - - - - 35
3.4.14 Programmable Reclosing Initiation and Reclose Block - - - - - - - - - - - - - - - - - - - 35
3.4.15 Output Contact and Opto-Input Tests - 36
3.4.16 Sixteen Fault Data - 36
3.4.17 Out-of-Step Block (OSB) Logic - 37

Starting PAGE NO

3.4.18 Optional Single-Pole-Trip (SPT) -38
3.4.19 Oscillographic Data -38
3.5 PILOT SYSTEM -39
3.5.1 Permissive Overreach Transfer Trip (POTT)/Simplified Unblocking - - - - - - - - - - - - - - -39
3.5.2 Permissive Underreach Transfer Trip (PUTT) -42
3.5.3 Directional Comparison Blocking Scheme (BLK) -43
3.5.4 High Resistance Ground Faults - Pilot Supplement- -45
3.5.5 Power Reversal on POTT -46
3.6 3-ZONE DISTANCE PHASE AND GROUND WITH INDEPENDENT PILOT PHASE AND GROUND- - -46
3.7 INVERSE TIME DIRECTIONAL OR NON-DIRECTIONAL OVERCURRENT GROUND BACKUP - - - -46
3.8 INSTANTANEOUS REVERSE DIRECTIONAL OVERCURRENT GROUND FUNCTION- - - - - - - - -47
3.8.1 Supplement to Reverse Z3G Trip -47
3.8.2 Carrier Ground Start on Blocking Scheme -47
3.8.3 Weakfeed System Application -47
3.9 LOSS-OF-POTENTIAL SUPERVISION (LOP) -47
3.10 LOSS-OF-CURRENT MONITORING (LOI) -47
3.11 OVERCURRENT SUPERVISION -47
3.12 INSTANTANEOUS OVERCURRENT TRIP -47
3.13 HIGH-SET INSTANTANEOUS DIRECT TRIP, -47
3.14 CLOSE-INTO-FAULT TRIP AND STUB BUS PROTECTION -47
3.15 UNEQUAL-POLE CLOSING LOAD PICKUP LOGIC -47
3.16 SELECTABLE LOSS-OF-LOAD ACCELERATED TRIP LOGIC (LLT) -47
3.17 CURRENT CHANGE FAULT DETECTOR -48
3.18 VOLTAGE CHANGE FAULT DETECTOR -48
3.19 3-TERMINAL LINE APPLICATION -48
3.20 WEAKFEED TRIP APPLICATION -48
3.21 LOGIC FOR RB ON BF SQUELCH (Setting BFRB) -49
3.22 OUT-OF-STEP (OS) LOGIC -50
3.23 OPTIONAL SINGLE-POLE TRIP (SPT) LOGIC AND OUTPUTS -50
3.24 OPTIONAL PROGRAMMABLE OUTPUT CONTACTS WITHOUT SPT OPTION - - - - - - - - - - - -50
3.25 BREAKER FAILURE CONTACT OUTPUTS -50
3.26 REL300 ORDERING INFORMATION -50

Section 4. INSTALLATION, OPERATION AND MAINTENANCE79

4.1 SEPARATING THE INNER AND OUTERCHASSIS -79

Starting PAGE NO

4.2 TEST PLUGS AND FT-14 SWITCHES -80
4.3 EXTERNAL WIRING -80
4.4 REL300 FRONT PANEL DISPLAY -80
    4.4.1 Vacuum Fluorescent Display -81
    4.4.2 LED Indicators -81
    4.4.3 Push-button Switches- -81
    4.4.4 Test Points -82
4.5 FRONT PANEL OPERATION -82
    4.5.1 Settings Mode -82
    4.5.2 Metering (Volts/Amps/Angle) Mode -83
    4.5.3 Target (Last and Previous Fault) Mode -83
    4.5.4 Test Mode (Self-Check Routine) -84
4.6 JUMPER CONTROLS -86
    4.6.1 Backplane Module -86
    4.6.2 Interconnect Module -86
    4.6.3 Microprocessor Module -86
    4.6.4 Power Supply Module -87
    4.6.5 Programmable Output Contact Module -87
4.7 COMMUNICATION PORT USE -87
    4.7.1 Introduction -87
    4.7.2 Communication Port Options -87
    4.7.3 Personal Computer Requirements -88
    4.7.4 Connecting Cables -88
    4.7.5 Relay Password and Settings Change Permission -89
4.8 SIXTEEN FAULT TARGET DATA -90
4.9 OSCILLOGRAPHIC DATA (Standard) (Optional Graphic Feature) -90
4.10 PROGRAMMABLE CONTACT OUTPUTS (Optional Feature) -90
4.11 ROUTINE VISUAL INSPECTION- -91
4.12 ACCEPTANCE TESTING -91
4.13 NORMAL PRECAUTIONS -91
4.14 DISASSEMBLY PROCEDURES -91

Section 5. SETTING CALCULATIONS - 105
5.1 CALCULATION OF REL300 SETTINGS - 105
    5.1.1 Ratio of Zero and Positive Sequence Impedances (ZR) - - - - - - - - - - - - - - - - - - - 105

Starting PAGE NO

5.1.2 Zone 1 Distance Unit Settings - - - 106
5.1.3 Zone 2 and Pilot Distance Unit Settings - - - 107
5.1.4 Zone 3 Distance Unit Settings - - - 107
5.1.5 Overcurrent Unit Setting - - - 107
5.1.6 OSB Blinder Settings (RT and RU) - - - 108
5.1.7 Overcurrent Ground Backup Unit (GB) - - - 110
5.1.8 Timer Settings- - - - 111
5.2 SELECTION OF REL300 SETTINGS- - - - 112
5.2.1 The OSC Setting - - - 112
5.2.2 The FDAT Setting - - - 113
5.2.3 The Current Transformer Ratio Setting (CTR) - - - 113
5.2.4 The Voltage Transformer Ratio Setting (VTR) - - - 113
5.2.5 The Frequency Setting (FREQ) - - - 113
5.2.6 The Current Transformer Type Setting (CTYP) - - - 113
5.2.7 THe Read Primary Setting (RP) - - - 113
5.2.8 Ohms Per Unit Distance Of The Line Primary Reactance Setting (XPUD) - - - 113
5.2.9 The Setting of DTYP- - - - 114
5.2.10 The Setting of TTYP - - - 114
5.2.11 For An SPT Application - - - 114
5.2.12 The Settings Of PTRI, Z1RI, Z2RI and Z3RI - - - 114
5.2.13 For A Pilot System - - - 114
5.2.14 The Setting Of PLT - - - 114
5.2.15 The STYP - - - 114
5.2.16 Pilot REL300 Only - - - 115
5.2.17 Permissive Pilot REL300 Only - - - 115
5.2.18 Application of POTT/BLK Systems - - - 115
5.2.19 The FDGT (FDOG Trip Delay Timer)- - - - 115
5.2.20 Distance/overcurrent Units - - - 115
5.3 GUIDANCE FOR RECLOSING INITIATION MODE PROGRAMMING- - - - 117
5.3.1 For System Without SPT System:- - - - 117
5.3.2 For System With SPT System: - - - 117
5.4 SELECTION OF PROGRAMMABLE CONTACTS - - - 117
5.5 BREAKER FAILURE CONTACTS - - - 117

Section 6. FULL PERFORMANCE TESTS (V2.23) - - - 119

6.1 FULL PERFORMANCE TESTS - 119
  6.1.1 Non-Pilot Performance Tests - 119
  6.1.2 Pilot Performance Tests - 133
  6.1.3 Single Pole Trip (Option) Acceptance Tests - 136
  6.1.4 REL300 With Out-of-step Block Option - 136

Section 7. ACCEPTANCE/MAINTENANCE TESTS - 147

7.1 NON-PILOT MAINTENANCE TESTS- 147
  7.1.1 Front Panel and Metering Check - 147
  7.1.2 Impedance Accuracy Check - 147
  7.1.3 Input Transformer (IP) Check - 148
  7.1.4 OPTO-Input Check - 148
  7.1.5 Output Contact Test- 149
7.2 PILOT MAINTENANCE TEST - 149
  7.2.1 Basic Function Test - 150
  7.2.2 Input Opto-Coupler Check - 150
7.3 SINGLE-POLE TRIP TEST- 151
  7.3.1 Output Contact Test- 151
  7.3.2 Input Opto-Coupler Check - 151

FIGURES

PAGE NO.

Figure 1-1: Layout of REL300 Modules Within Inner and Outer Chassis . . . 8
Figure 1-2: Simplified Block Diagram of REL300 Relay . . . 9
Figure 1-3: REL300 Relay Program Functions . . . 10
Figure 2-1: CO-2 Curve Characteristics . . . 16
Figure 2-2: CO-5 Curve Characteristics . . . 17
Figure 2-3: CO-6 Curve Characteristics . . . 18
Figure 2-4: CO-7 Curve Characteristics . . . 19
Figure 2-5: CO-8 Curve Characteristics . . . 20
Figure 2-6: CO-9 Curve Characteristics . . . 21
Figure 2-7: CO-11 Curve Characteristics . . . 22
Figure 2-8: REL300 Outline Drawing . . . 23
Figure 2-9: REL300 Terminal Connections (Rear View with FT-14 Switches) . . . 24
Figure 3-1: REL300 Characteristics/R-X Diagram . . . 51
Figure 3-2: Mho Characteristic for Phase-to-Ground Faults . . . 52
Figure 3-3: Mho Characteristics for Three-Phase Faults (No Load Flow) . . . 53
Figure 3-4: Mho Characteristics for Phase-to-Phase and Two Phase-to-Ground Faults (No Load Flow) . . . 53
Figure 3-5: REL300 Zone 1 Trip Logic . . . 54
Figure 3-6: REL300 Zone 2 Trip Logic . . . 55
Figure 3-7: REL300 Zone 3 Trip Logic . . . 56
Figure 3-8: REL300 Zone 1 Extension Scheme . . . 57
Figure 3-9: Inverse Time Overcurrent Ground Backup Logic . . . 57
Figure 3-10a: Loss-of-Potential Logic (Version 2.23) . . . 58
Figure 3-11: Loss of Potential Logic (System Diagram) . . . 60
Figure 3-12: AC Current Monitoring Logic . . . 60
Figure 3-13: Overcurrent Supervision . . . 61
Figure 3-14: Instantaneous Overcurrent Highset Trip Logic . . . 61
Figure 3-15a: REL300 Close-Into-Fault Trip (CIFT) and Stub Bus Protection Logic . . . 62
Figure 3-15b: Special Application for CIF Logic with LV Time Delay Pickup . . . 62
Figure 3-16: REL300 Unequal-Pole-Closing Load Pickup Trip Logic . . . 63
Figure 3-17: Load Loss Accelerated Trip Logic . . . 64
Figure 3-18a: Out-of-Step Block Logic (Blinder Characteristics) . . . 64
Figure 3-18b: Out-of-Step Block Logic . . . 65
Figure 3-19: Reclosing Initiation Logic . . . 66

FIGURE NO

Figure 3-20: Single Pole Trip Logic 67
Figure 3-21: Pilot Trip Relay 67
Figure 3-22: POTT/Unblocking Pilot Trip Logic 68
Figure 3-23: Carrier Keying/Receiving Logic in POTT/Unblocking Schemes 68
Figure 3-24: PUTT Keying Logic 69
Figure 3-25: Blocking System Logic 70
Figure 3-26: PLTG Supplemented by FDOG 71
Figure 3-27: Power Reversed on POTT/Unblocking Schemes 71
Figure 3-28: Unequal Pole Closing on Fault 72
Figure 3-29: Additional Logic for POTT/Unblocking Schemes on 3-Terminal Line Application 72
Figure 3-30: Additional Logic for PUTT Scheme on 3-Terminal Line Application 73
Figure 3-31: Weakfeed Application 74
Figure 3-32: Reversible Zone 3 Phase and Ground (Reverse Block Logic) 74
Figure 3-33: Composite Signal For Programmable Output Contacts 75
Figure 4-1: REL300 Backplate 93
Figure 4-2: REL300 Backplane PC Board Terminals 94
Figure 4-3: REL300 Systems External Connection 95
Figure 6-1 Test Connection for Single-Phase-to-Ground Faults 141
Figure 6-2 Test Connection for Three-Phase Faults 142
Figure 6-3 Test Connection for Phase-to-Phase Faults 143
Figure 6-4 Test Connection for Dual Polarizing Ground Directional Unit 144
Figure 6-5 REL300 with Out-of-Step Block Optior 145

Figure SD-1: REL300 Block Diagram V2.23 162
Figure SD-2a: REL300 System Logic Diagram (Sheet 1 of 3) V2.23 163
Figure SD-2b: REL300 System Logic Diagram (Sheet 2 of 3) V2.23 164
Figure SD-2c: REL300 System Logic Diagram (Sheet 3 of 3) V2.23 165

TABLES

TABLE NO

TABLE 3-1: REL300 CATALOG NUMBERS. 76
TABLE 3-2: REL300 ACCESSORIES 77
TABLE 3-3: SINGLE-POLE-TRIP OPERATING MODES 77
TABLE 3-4: REL300 PROGRAMMABLE OUTPUT CONTACTS 78
TABLE 4-1: SETTING DISPLAY (SHEET 1 OF 3). 96
TABLE 4-1: SETTING DISPLAY (SHEET 2 OF 3). 97
TABLE 4-1: SETTING DISPLAY (SHEET 3 OF 3). 98
TABLE 4-2: METERING DISPLAY. 99
TABLE 4-3: TARGET (FAULT DATA) DISPLAY (SHEET 1 OF 2) 100
TABLE 4-3: TARGET (FAULT DATA) DISPLAY (SHEET 2 OF 2) 101
TABLE 4-4: RECOMMENDED JUMPER POSITIONS (V2.2X) 102
TABLE 4-5: OUTPUT CONTACT SELECTION 103
TABLE 4-6: COMMUNICATIONS CABLE REQUIREMENTS 104
TABLE 4-7: DIP SWITCH SETTING CHART 104
TABLE 5-1: CURRENT TRANSFORMER SETTINGS 117
TABLE 5-2: RECLOSING INITIATION MODE PROGRAMMING 118
TABLE 5-3: TRIP TIME CONSTANTS FOR CURVES 118
TABLE 6-1: PRESENT REL300 SETTINGS (PILOT SYSTEM) - V2.2X 139
TABLE 6-2: TRIP TIME CONSTANTS FOR CO CURVES 139
TABLE 6-3: FAULT TYPES APPLIED TO REL300 140

Section 1. PRODUCT DESCRIPTION

1.1 INTRODUCTION

The REL300 relay assembly is a numerical transmission line protection system, with three zones of distance protection. All measurements and logic are performed by digital means, using a microprocessor. Self-checking and line monitoring techniques are included. REL300 is primarily recommended for application on non-series compensated lines.

The non-pilot REL300 relay system is standard (see Section 3, page 27); an optional pilot REL300 relay system is also available (in Section 3, page 27).

1.2 REL300 CONSTRUCTION

The standard nomenclature for **ABB r**elay protection equipment is as follows:

- Cabinet - contains fixed-racks, swing-racks, or open racks
- Rack - contains one or more chassis (e.g., the REL300)
- Chassis - contains several modules (e.g., Microprocessor or Power Supply)
- Module - contains a number of functional circuits (on printed circuit board)
- Circuit - a complete function on a printed circuit board (e.g., analog-to-digital conversion)
- The REL300 relay assembly consists of an outer-chassis and an inner-chassis which slides into the outer-chassis. The REL300 conforms to the following dimensions and weight (see also Section 2. page 13):
- Height 7" (requires 4 rack units; 1.75" each)
- Width 19"
- Depth 13.6"
- Weight 35 Lbs

All of the relay circuitry, with the exception of the input isolation transformers and first-line surge protection, are mounted on the inner chassis, to which the front panel is attached. The outer chassis has a Backplate, which is a receptacle for all external connections, including a communication adaptor (see Figure 4-1, page 95). Two FT-14 switches may be included, as options, in the two peripheral areas of the outer chassis. The FT-14 switches permit convenient and safe disconnection of trip, ac and dc input circuits, and provide for injection of test signals.

The REL300 relay provides the following contact outputs:

- 4 make contacts (2 trip, 2 BFI); 8 additional optional contacts when single pole trip option is used.
- Single pole reclose initiate (2 Form A)
- Three pole reclose initiate (2 Form A)
- Reclose block (2 Form A)
- General Start (1 Form A)
- System failure alarm (1 Form C)
- Trip alarm (1Form C; 1 Form A is available if SBP is not used).
- 8 additional programmable contacts when the Contact module is used.

1.3 REL300 MODULES

The inner and outer chassis, together, contain 6 standard modules, plus the option module for single pole trip applications (see Figure 1-1, page 9). The Backplate is connected to the Backplane module (outer chassis). The remaining modules are attached to the inner chassis:

- Interconnect module
- Option module or Contact module
- Filter module
- Microprocessor module
- Display module
- Power Supply module

1.3.1 Backplane Module

The Backplane Assembly includes three voltage transformers, four current transformers, two filter chokes and several surge protection capacitors.

The Backplane Module receives all external connections (with or without the FT-14 switch option), and connects directly to the Interconnect module, thru plug-in connectors (J11, J12, J13) which provide the connection between outer and inner chassis.

The female parts of the connectors are mounted on the Backplane module, which is part of the outer chassis. The male parts of the connectors are mounted on the Interconnect module, which is part of the inner chassis.

The NET or RS-PONI is mounted on the Backplate of the outer chassis and is connected to the Backplane module. For details, see I.L. 40-611 and 40-610 respectively.

1.3.2 Interconnect Module

The Interconnect module becomes the floor of the REL300 inner chassis; it provides electrical connections from and to all other modules: from the Backplane (at the rear), to the Filter and Power Supply modules (at left and right, respectively), and to the Microprocessor and Display modules at the front of the inner chassis.

The Interconnect module receives inputs V_{AN}, V_{BN}, V_{CN}, I_A, I_B, I_C, I_P from the Backplane module and feeds them to the Filter module. The I_P input is used for zero-sequence dual-polarizing ground current measurement; the input is from the power transformer neutral ct. Also, seven opto-couplers, on the Interconnect module, send the following signals to the Microprocessor module:

- External Reset - resets the target display.
- 52b - used for close-into-fault (CIF) detection, load loss trip (LLT) and carrier-start and stop control in a pilot system.
- 52a (for single-pole trip option; i.e., for pole disagreement).
- Pilot Enable - should be “ON” for the pilot system option.
- Receiver #1 (for Pilot option) - carrier receiver for two terminal application.
- Receiver #2 (for Pilot option) - second carrier receiver for three-terminal application.
- SBP (89b) for stub bus protection.

1.3.3 Option Module/Contact Module

For single-pole tripping applications, an Option module is added with extra tripping and reed relays. The Option module plugs into the Interconnect module.

For 3-pole tripping application, an optional Contact module can be plugged into the connector and provide 8 additional programmable output contacts.

1.3.4 Filter Module

The Filter module band-limits the seven inputs from the Interconnect module: V_{AN}, V_{BN}, V_{CN}, I_A, I_B, I_C, I_P. These inputs are fed to the Microprocessor module (analog signal multiplexer).

1.3.5 Microprocessor Module

The Microprocessor module includes the following subsystems:

- **Microprocessor** - Intel 80C196, a 16-bit microcontroller operating with a 10 MHz clock.
- **EPROM** - Program memory in separate, easily-replaced EPROM chips.
- **PROM** - Programmable read-only memory.
- **RAM** - Volatile read-write memory, for working storage.
- **NOVRAM (EEPROM)** - Non-volatile memory for storing settings and fault-data targets when the REL300 relay is deenergized.
- **A/D Converter** - The seven inputs from the filter module are analog-multiplexed to a single sample/hold circuit. The output of the sample/hold is fed to the Analog-to-Digital Converter through an auto-ranging circuit which shifts gain by a factor of eight.
- **Digital I/O Circuitry** - Status inputs from breaker auxiliary contacts (52a and 52b), and External Reset signal are interfaced to the microprocessor via optical isolators (Figure 4-2, page 96). The microprocessor executes control outputs using dry contacts. Output relays (Figure 4-2) are used for breaker tripping, breaker failure initiation (BFI), reclose initiation (RI), and reclose blocking (RB). General start contact (GS) is provided for starting the external sequence of events or fault recorders. Trip and relay-failure alarm contacts are included. Reed relays in the trip circuits sense trip coil current flow and feedback target information to the microprocessor.

For the option of Contact module, eight additional output contacts are provided and can be programmed from 30 functions shown in Table 3-4, page 79.

NOTE: **JMP3 should be “OUT” for normal ABC rotation. Insert a jumper into JMP3 position for ACB phase rotation system application.**

1.3.6 Display Module

The Display module has two (four-digit) alphanumeric displays for settings, metering fault designation and information. The metering display shows three-phase voltage, current and angle. Fault data, stored in the Microprocessor module, is accessible through the front panel display. Fault data includes: pre-fault phase A voltage, current and angle. It also shows the type of fault, fault voltages, currents, angles and fault location. The Display module is attached to the front panel; it can be used to access and store data, and contains 7 LEDs, as follows:

- Relay in Service (ready to use)
- Settings (can read or change settings)
- Volts/Amps/Angles (can read measuring inputs)
- Last Fault (when flashing, indicates new fault information available)
- Previous Fault (when last fault LED flashes twice/minute, indicates information for the fault preceding the last fault)
- Value Accepted (when the Settings LED is also “ON”, a new setting value is accepted; when the Test LED is also “ON”, the output contacts can be tested)
- Test (can verify self-check and perform functional test)

The display will be blocked momentarily, every minute, for the purpose of self-check; this will not affect the relay protection function.

A display saver software is also built in. The REL300 display will be on only for 5 minutes after turning the dc power on or depressing any one of the front panel push-button or detecting faults on the line.

1.3.7 Power Supply Module

The Power Supply module is available in three ranges:

- 38 - 70 Vdc
- 88 - 145 Vdc
- 176 - 290 Vdc

Provides isolation from station battery; includes overcurrent and overvoltage protection. Status monitoring and loss-of-power indication are accomplished via a failure-alarm relay (on the Interconnect module). Relay is normally picked up, but the processor deenergizes it when a problem is found. Total power loss also drops-out the relay.

1.3.8 Contact Outputs

1.4 TEST ACCESSORIES

The REL300 may be tested with two devices:

- Inner Chassis Test Fixture.

This device is similar to the outer chassis, and includes a Backplane and Transformer assembly.

- Extender Board

This device includes two small pc boards with two ribbon cables. The inner chassis can be tested outside of the outer case by means of the Extender Board.

1.5 FAULT DETECTION SOFTWARE

REL300 fault-detection software operates in two modes:

- Background mode
- Fault mode

The REL300 relay normally operates in the “Background mode” where it looks for phase current or phase voltage disturbances. Once a phase disturbance is detected, the relay enters the “Fault mode”. During non-fault operation (in the Background mode), the REL300 Microprocessor (U100) used its spare time to check its hardware, service the operator panel, and check for a disturbance in voltage or current which indicates a possible fault. If a disturbance is seen, the programs switch to the Fault mode, for several power cycles or longer, to perform phase and ground unit checks for each zone and function.

1.5.1 Background Mode

During the background mode, the seven inputs (currents and voltages shown in Figure 1- 2, page 10) are sampled to test for line faults. These currents and voltages are sampled and converted into digital quantities and input to the Microprocessor where all signal processing takes place. (REL300 detects faults by digital computation; not by analog.) The system continuously takes 8 samples per cycle. The components of the signals which are power system frequency are extracted.

The REL300 software which does the sampling has 8 states; these states correspond to the sampling rate (8 samples per cycle). Movement from state to state is controlled by a timer. The timer is loaded with a state time at the beginning of the state. The code executed within a state should be completed before the timer expires. The software then waits for the timer to time out.

The REL300 relay program functions are included in a flow chart loop (shown in Figure 1- 3, page 11), which the Microprocessor repeats 8 times per power cycle. Most functions are performed all of the time, in the background mode, as shown. An important detail (not shown in Figure 1- 3) is that many of the checks are broken into small parcels, so that the whole complement of tasks is performed over a one-cycle period (eight passes through the loop). Some of the checks are performed more than once per cycle.

The 60 Hz components are extracted from the samples (from each cycle) and converted to voltage and current phasor values using a Full Cycle Fourier notch-filter algorithm During the process the Fourier coefficients and sums are calculated for computing the phase angles, amplitude and RMS values of current and voltage. An anti-aliasing filter is used to filter out high frequencies. The Fourier algorithm is also used to remove dc and unwanted harmonics.

1.5.2 Fault Mode and Restricted Fault Tests

Upon entry into the fault mode, the sums of the Fourier coefficients and sum of squares from the background mode are stored. New sums are obtained by using fault data.

To speed up tripping for severe faults, restricted fault testing is implemented. The last half cycle of background mode input samples and the first half cycle of fault mode input samples are used to compute the current and voltage vectors and rms values. No dc offset compensation is performed fault current is of a large magnitude on a zone 1 high speed trip, therefore, the dc offset is negligible. High-set instantaneous overcurrent and Zone 1 distance unit tests are executed (see Section 3.2, LINE MEASUREMENT TECHNIQUES on page 27). This will speed up tripping by as much as one cycle for high current faults.

Instantaneous overcurrent, inverse time overcurrent protection, and out-of-step blocking are also conducted during the fault mode and background mode.

For Zone 2 and Zone 3 faults (see Section 3, NON-PILOT SYSTEM on page 27), impedance computation and checking will continue throughout the specified time delay. The impedance calculation will be performed once every cycle, in the fault mode and background mode.

1.5.3 Unique Qualities of REL300

A unique characteristic of the REL300 system is its phase selection principle. It determines the sum of positive and negative sequence currents for each phase by a novel method which excludes the influence of pre-fault load current. From this information, the fault type can be clearly identified and the actual distance to the fault can be estimated.

High-resistance ground-fault detection is available in REL300. Sensitive directional pilot tripping is achieved through an FDOG timer (FDGT), which is selectable from 0 to 15 cycles or block, on the Microprocessor module. The pilot distance unit is always active and has the priority for tripping.

Load-loss tripping entails high-speed, essentially simultaneous clearing at both terminals of a transmission line for all fault types except three-phase, without the need of a pilot channel.

Any fault location on the protected circuit will be within the reach of the zone 1 relays at one or both terminals. This causes direct tripping of the local breaker without the need for any information from the remote terminal. The remote terminal recognizes the loss of load-current in the unfaulted phase(s) as evidence of tripping of the remote breaker. This, coupled with Zone 2 distance or directional overcurrent ground fault recognition at that terminal, allows immediate tripping to take place at that terminal.

1.6 SELF-CHECKING SOFTWARE

REL300 continually monitors its ac input subsystems using multiple A/D converter calibration-check inputs, plus loss-of-potential and loss-of-current monitoring described. Failures of the converter, or any problem in a single ac channel which unbalances nonfault inputs, trigger alarms. Self-checking software includes the following functions:

a. Digital Front-end A/D Converter Check

b. Program Memory Check Sum

Immediately upon power-up, the relay does a complete ROM (EPROM) checksum of program memory. Afterwards, the REL300 relay continually computes the program memory checksum.

c. Power Up RAM Check

Immediately upon power-up, the relay does a complete test of the RAM data memory.

d. Nonvolatile RAM Check

All front-panel-entered constants (settings) are stored in nonvolatile RAM in three identical arrays. These arrays are continuously checked by the program. If all three array entrees disagree, a nonvolatile RAM failure is detected, and blocks the tripping action. If only one array disagrees with the other two, the failure does not disable the processor and the cause of the problem will be shown on the display. (See section 4.5.4, Test Mode (Self-Check Routine) on page 86, for the detailed description.)

e. Output Contact check (see Section 4.5.4, page 86)

f. Opto Input check (see Section 4.5.4, page 86)

1.7 UNIQUE REMOTE COMMUNICATION PROGRAM (RCP)

Special software, RCP is provided for obtaining fault, metering and current settings data as well as sending data to REL300. RCP can best be described as a user friendly way of using a personal computer (PC) to communicate with ABB protective relays by way of pull-down menus. By coupling a computer with the appropriate communications hardware, it is possible to perform all relay setting and data interactions that are possible from the man-machine interface. RCP is required to communicate with REL300 via the communication port(s). Refer to RCP instruction manual, I.L. 40-603, for detailed information. Refer to Section 4.7.2, Communication Port Options on page 89, for communication port options.

To obtain the latest RCP communication software, please visit the Power Automation and Protection Division website at:

Visit our website: http://www.abb.com/papd
and select Software Download

or call the ABB Power T&D Company Inc., Power Automation and Protection Division bulletin board system via modem at:

(800) 338-0581
or
(954) 755-3250

Using configuration settings 300 - 14,400 bits/second, 8 data bits,1 stop bit, no parity, and full duplex. Once the connection is established and login is completed. From the TOP menu choose:
L - Library of Files. Then from the Library of Files menu choose
D - Down Load File, file name RCPxxxx.EXE (where xxxx is the most current version number e.g., 175D or higher).

1.8 POWER SYSTEM ROTATION ABC OR ACB SELECTION

The phase rotation ABC or ACB can be selected by a jumper #3 on the Microprocessor module. The system indicates ABC rotation without jumper #3. With jumper #3 in place, the input phase sequence should be ACB, e.g., phase A leads phase C, C leads B and B leads A, respectively. The rotation is shown on the Metering Mode.

WARNING	***Check jumper #3 before energizing the relay. Jumper #3, should be removed for phase sequence rotation ABC.***

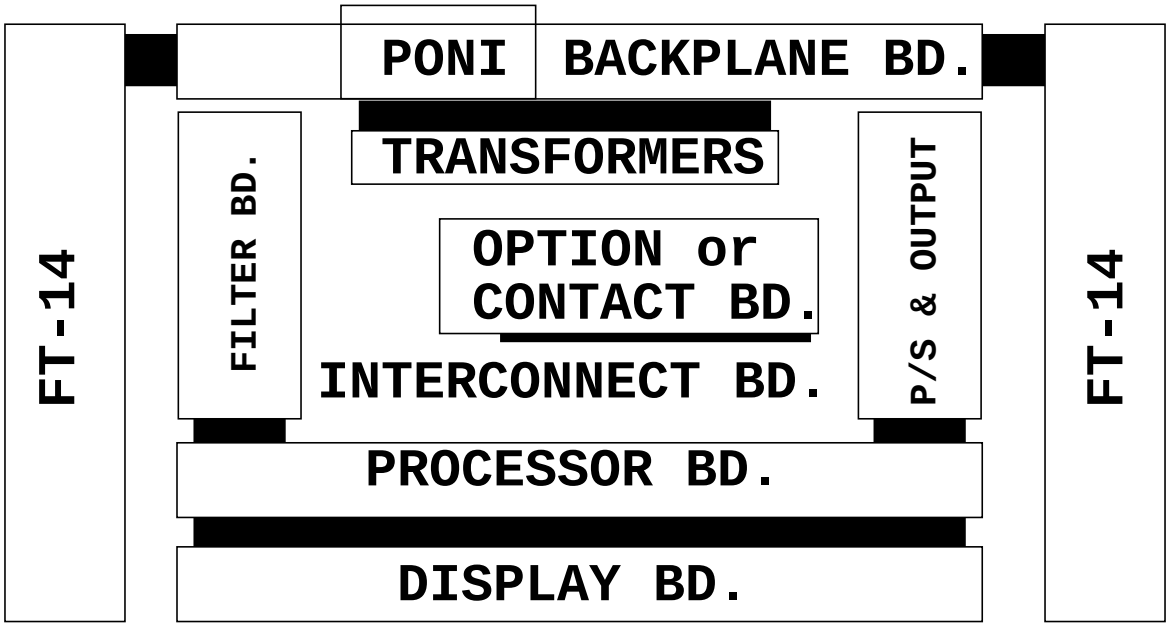

esk00305

Figure 1-1: Layout of REL300 Modules Within Inner and Outer Chassis

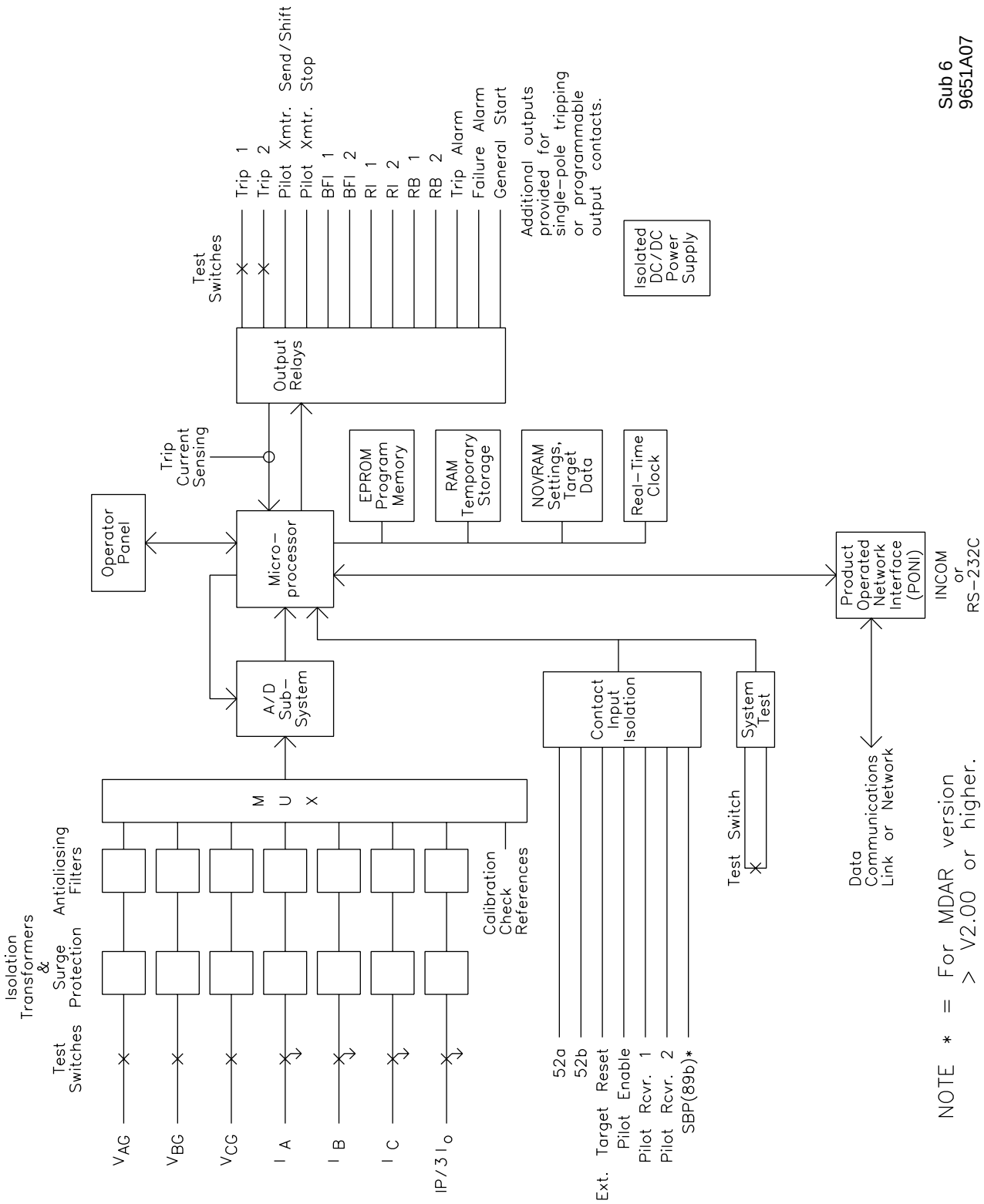

Figure 1-2: Simplified Block Diagram of REL300 Relay

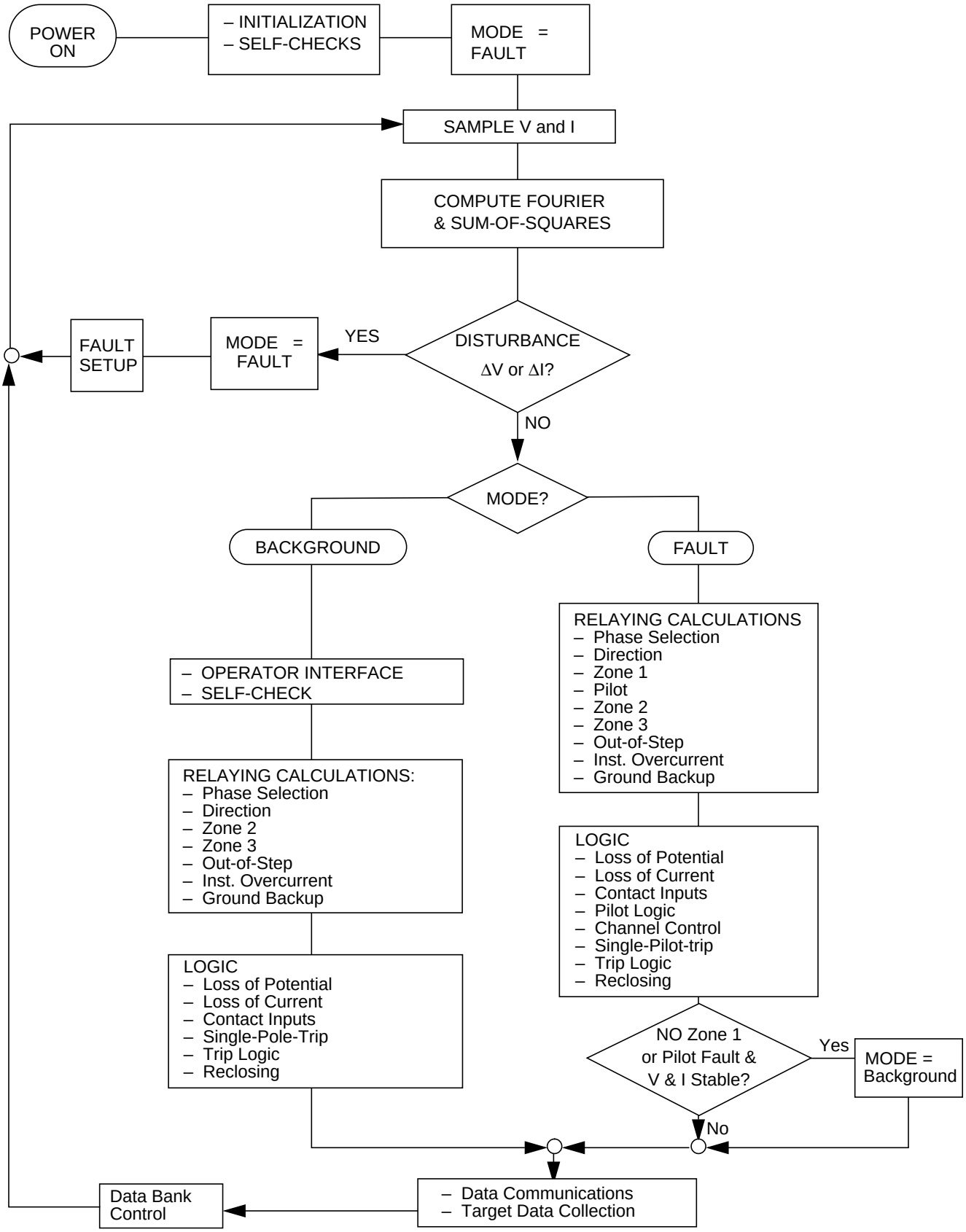

Figure 1-3: REL300 Relay Program Functions

Section 2. SPECIFICATIONS

2.1 TECHNICAL

Operating Speed (from fault detection to trip contact close -60 Hz)		12-14 ms (minimum) 22 ms (typical)
ac Voltage	(VLN) at 60 Hz	70 Vrms
	(VLN) at 50 Hz	63.5 Vrms
ac Current (In)		1 or 5 A
Rated Frequency		50 or 60 Hz
Maximum Permissible ac Voltage		
• Continuous		1.5 x nominal voltage
• 10 Second		2.5 x nominal voltage
Maximum Permissible ac Current		
• Continuous		3 x Nominal Current
• 1 Second		100 x Nominal Current
Typical Operating Current		0.5 A
dc Battery Voltages		

Nominal	Operating Range
48/60 Vdc	38 - 70 Vdc
110/125 Vdc	88- 145 Vdc
220/250 Vdc	176 - 290 Vdc

dc Burdens: Battery	7 W normal 30 W tripping
ac Burdens:	
Volts per Phase	0.02VA at 70 Vac
Current per Phase	0.15VA at 5 A

2.2 EXTERNAL CONNECTIONS

- Terminal blocks located on the rear of the chassis suitable for #14 square tongue lugs
- Wiring to FT-14 switches suitable for #12 wire lugs

2.3 CONTACT DATA

Trip Contacts - make & carry 30 A for 1 second, 10 A continuous capability, break 50 watts resistive or 25 watts with L/R =.045 seconds

- Non-Trip Contacts
  1A Continuous
  0.1A Resistive Interrupt Capability

Supports 1000 Vac across open contacts

Contacts also meet IEC - 255-6A, IEC - 255-12, IEC -255-16, BS142-1982.

2.4 MEASUREMENTS

Number of zones: 3 zones are standard (optional pilot adds additional zone).

Operating Characteristics: variable mho characteristics for all fault types.

2.5 MEASUREMENT UNITS

Three variable mho phase-to-earth units and one variable mho phase-to-phase impedance unit per zone.

One ground directional (ITG) and one phase directional (ITP) high-set overcurrent unit.

Three-phase non-directional overcurrent units (IL) for load loss trip and CIFT.

One non-directional phase overcurrent unit medium set (Im) for phase supervision.

One non-directional ground overcurrent unit medium set (IOM) for ground supervision.

One ground overcurrent unit for LOI monitoring.

One inverse time overcurrent ground unit with CO characteristics (see Figures 2-1 thru 2-7, page 16 to page 22); selectable non-directional or directional capability.

One forward set instantaneous directional overcurrent ground unit. (Pilot-high resistance ground faults.)

Three under-voltage units (LV) for weakfeed and LOP supervision.

Four current change fault detectors, and three voltage change fault detectors.

One instantaneous overcurrent unit low set (IOS)

One reverse set instantaneous directional overcurrent ground unit (Pilot Carrier Start, Weakfeed, Transient Blocking)

2.6 SETTING RANGES

Phase and Ground Distance (Zone 1, 2, 3):

- 0.01-50 ohms in 0.01 ohm steps for 5 A (ct)
- 0.05-250 ohms in 0.05 ohm steps for 1 A (ct)

Zone Timers - Separate timers for phase and ground:

- Zone 1 (0 to 15 cycles in 1 cycle steps)
- Zone 2 (0.10 to 2.99 seconds in 0.01 second steps, Block)
- Zone 3 (0.10 to 9.99 seconds in 0.01 second steps, Block)

Forward Directional Ground Timer (FDGT)

- 0 to 15 cycles in 1 cycle steps, Block

Ohms per Unit Distance:

- 0.300-1.500 in 0.001/DTYP (Km or Mi)

Inverse Time Overcurrent Ground Relay:

- Pickup (0.1-0.8) in 0.1 A increments for 1 A (ct)
- Pickup (0.5-4.0) in 0.5 A increments for 5A (ct). Choice of 7 time-curve families (CO-2, 5, 6, 7, 8, 9, 11 Characteristics), 63 time curves per family. (See Figures 2-1 thru 2-7, page 16 to page 22.)
- Set for directional or non-directional operation.

High set instantaneous directional overcurrent trip units - phase and ground (I_{AH}, I_{BH}, I_{CH}, I_{OH}).:

- 2.0-150 in 0.5 A steps for 5 A (ct)
- 0.4-30 in 0.1 A steps for 1 A (ct)

2.7 GROUND/ PHASE OVERCURRENTS AND UNDERVOLTAGE UNITS

- Undervoltage level units (LVA, LVB, LVC and CIF) for weakfeed and close-into-fault, from 40 to 60 Vrms in 1-volt steps
- Current Units (IAL, IBL, ICL, IOS, IOM & IM)
  0.5 - 10 in 0.1 A steps for 5 A (ct)
  0.1 - 2 in 0.02 A steps for 1 A (ct)

Current Change Fault Detectors (ΔI_A,ΔI_B,ΔI_C, and ΔI_0), no setting required.

Voltage change fault detectors (ΔV_A, ΔV_B and ΔV_C) no setting required.

Ground Overvoltage Unit $3V_0$ (no setting required).

2.8 OPTIONAL SINGLE-POLE-TRIP LOGIC AND OUTPUTS (Without Programmable Contact Option)

- SPT/RI1 on first ϕGF fault and 3PT on other types of faults
- 3PT/RB if reclosing on a permanent fault
- 3PT/RB if second phase(s) fault during single phasing
- 3PT on a selectable time delay limit if the system fails to reclose (62T)
- TRIP/RI mode selections (TTYP)

SELECT	TRIP	RI
OFF	3PT	NO
1PR	3PT	RI2 (ϕG)
2PR	3PT	RI2 (ϕG,ϕϕ)
3PR	3PT	RI2 (ϕG,ϕϕ,Mϕ)
SPR	SPT (ϕG)	RI1
	3PT (Mϕ)	NO
SPR/3PR	SPT (ϕG)	RI1
	3PT (Mϕ)	RI2

Legend:

SPT	-	Single Pole Trip
3PT	-	3 Pole Trip
RI	-	Reclose Initiation
RB	-	Reclose Block
RI2	-	3 Pole Reclose Initiate
RI1	-	Single Pole Reclose Initiate
ϕG	-	Single Phase to Ground Faults
Mϕ	-	Multi-Phase Faults
ϕϕ	-	2-Phase Faults

2.9 OPTIONAL PROGRAMMABLE OUTPUT CONTACTS (Without Single-pole Trip Option)

Eight programmable contacts selected from 30 pre-assigned signals which can be programmed either AND or OR logic together. (Refer to Table 3-4, page 78 for the 30 signals.)

- Four NO heavy duty contacts with FT-switches and 1 timer for pickup and/or dropout delay (0 to 5 sec. in 0.01 sec/step)
- Four Standard contacts with jumper selection for NO or NC outputs and one timer for pickup and/or dropout delay. (0 to 5 sec. in 0.01 sec/step).

2.10 OUT-OF-STEP BLOCK

- OSB Override Timer
  400-4000 ms in 16 ms steps
- OSB Inner Blinder (RT)
  1.0-15.0 ohms in 0.1 ohm steps

NOTE: The RT is a standard setting; for load restriction.

- OSB Outer Blinder (RU)
  3.0-15.0 ohms in 0.1 ohm steps

2.11 SELECTABLE PHASE SEQUENCE ABC OR ACB ROTATION

A jumper #3 on Microprocessor module is used for phase rotation selection.

- ABC system – without jumper #3
- ACB system – with jumper #3 in place

2.12 OPTIONAL COMMUNICATION INTERFACE

- RS-PONI (232C interface) - for single point computer communications
- NET-/PONI (INCOM interface) - for local network communications

2.13 CHASSIS DIMENSIONS AND WEIGHT

Height	7" (177.8mm), 4 Rack Units (See Figure 2-8, page 23)
Width	19" (482.6mm)
Depth	14" (356mm) including terminal blocks
Weight	35 lb. (16Kg net)

2.14 ENVIRONMENTAL DATA

Ambient Temperature Range

- For Operation -20°C to +60°C
- For Storage -40°C to +80°C

Dielectric Test Voltage 2.8 kV, dc, 1 minute (ANSI C37.90.0, IEC 255-5)

Impulse Withstand Level 5 kV peak, 1.2/50 µsec, 0.5 joule (IEC 255-5)

Fast Transient Surge Withstand Capability 4 kV, 5/50 nsec (IEC 801-4); 5kV 10/150 nsec (ANSI C37.90.1).

Oscillatory Surge Withstand Capability 2.5 kV, 1 MHz (ANSI C37.90.1, IEC 255-6)

EMI Volts/Meter Withstand 25 MHz-1GHz, 10V/m Withstand (Proposed ANSI C37.90.2).

2.15 YEAR 2000

For Year 2000 compliance issues, visit our website http://www.abb.com/papd ans view year 2000 issues..

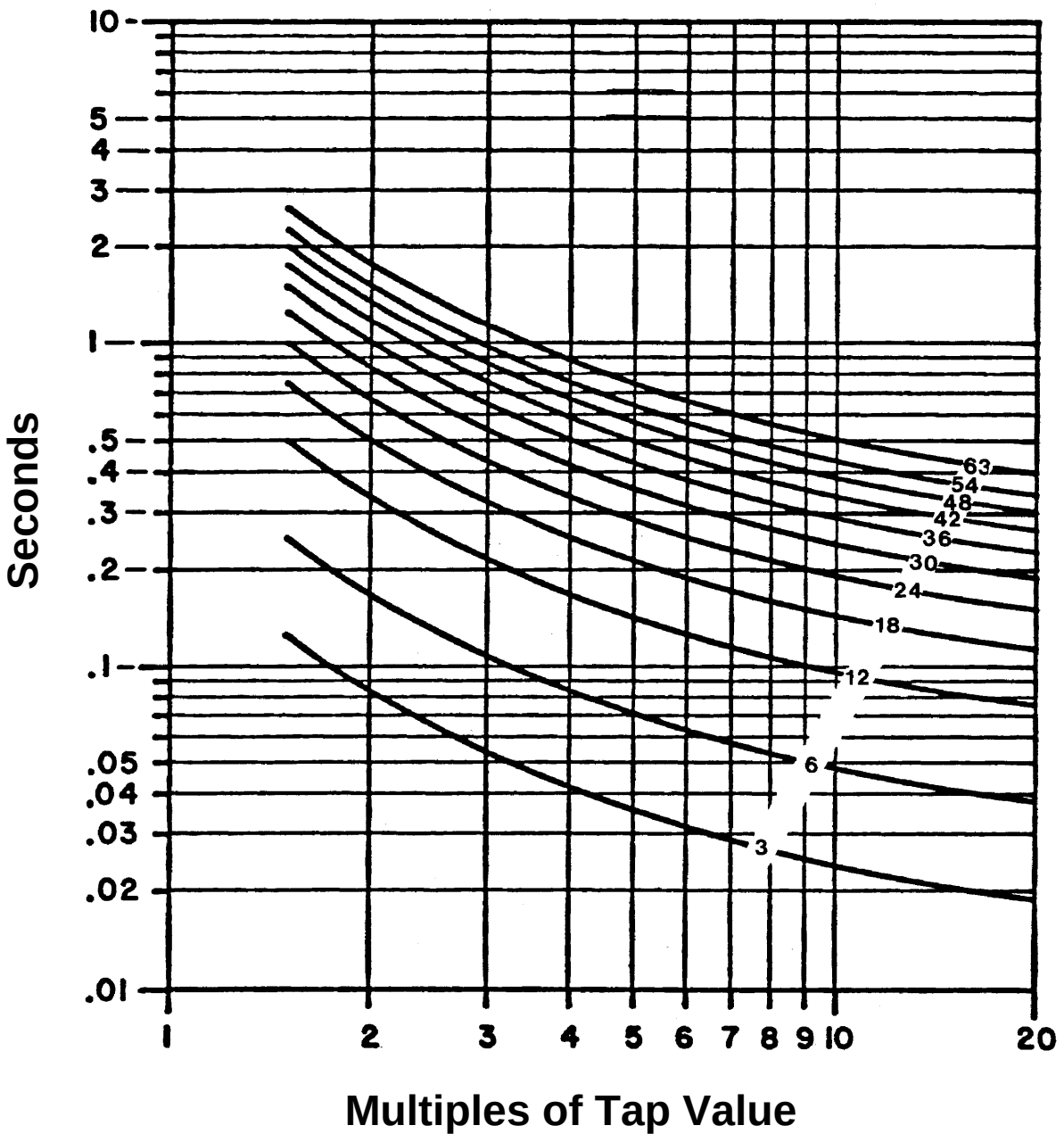

P = 1.0 K =735.0 T0 = 111.99 C = 0.88
T = [K/(M-C)^ P + T0] x TD/24000

Sub 2
619596

Figure 2-1: CO-2 Curve Characteristics

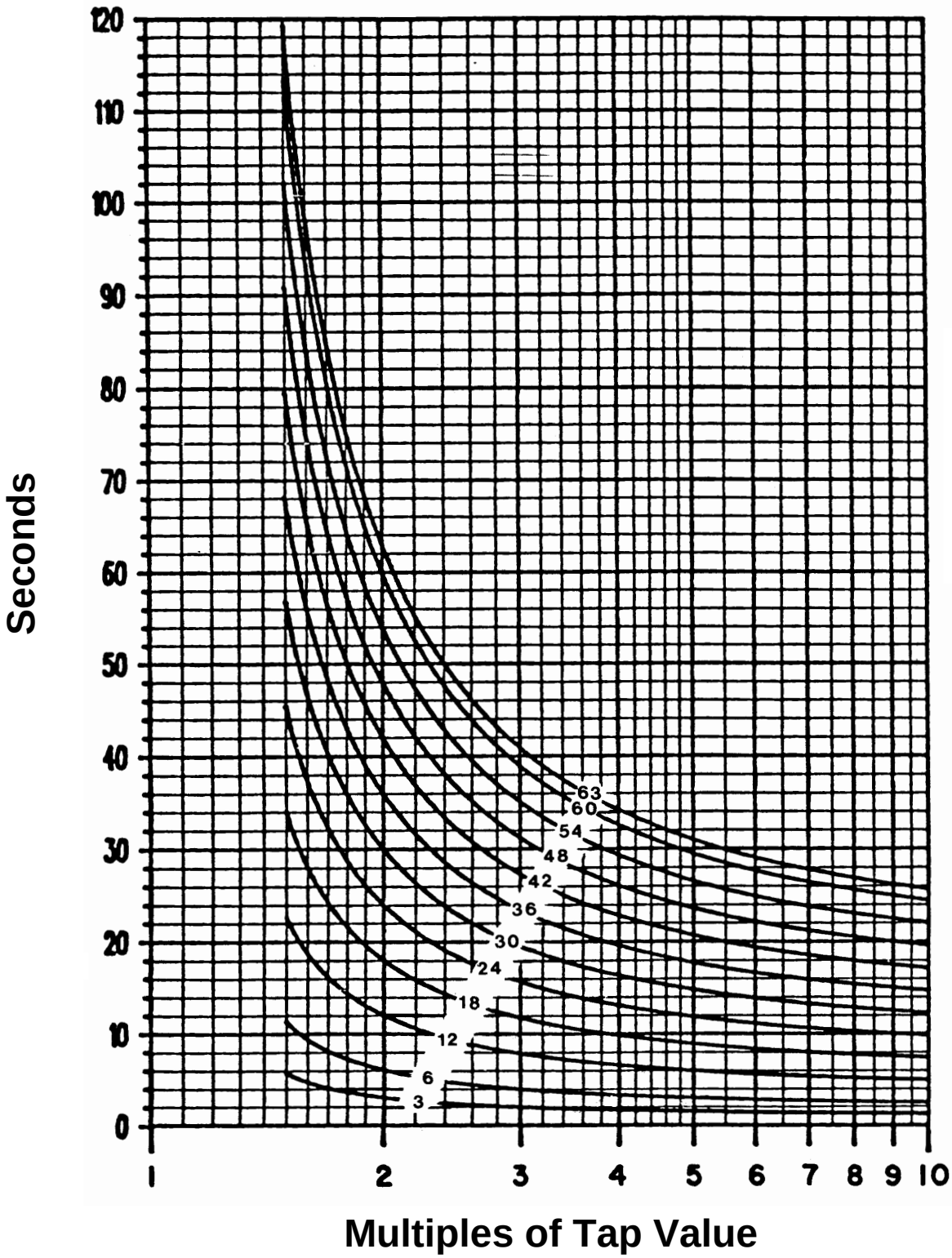

P = 2.0 K = 17640.0T0 = 110.0 C = 0.5
T = [K/(M-C)^ P + T0] x TD/24000

Sub 2
619597

Figure 2-2: CO-5 Curve Characteristics

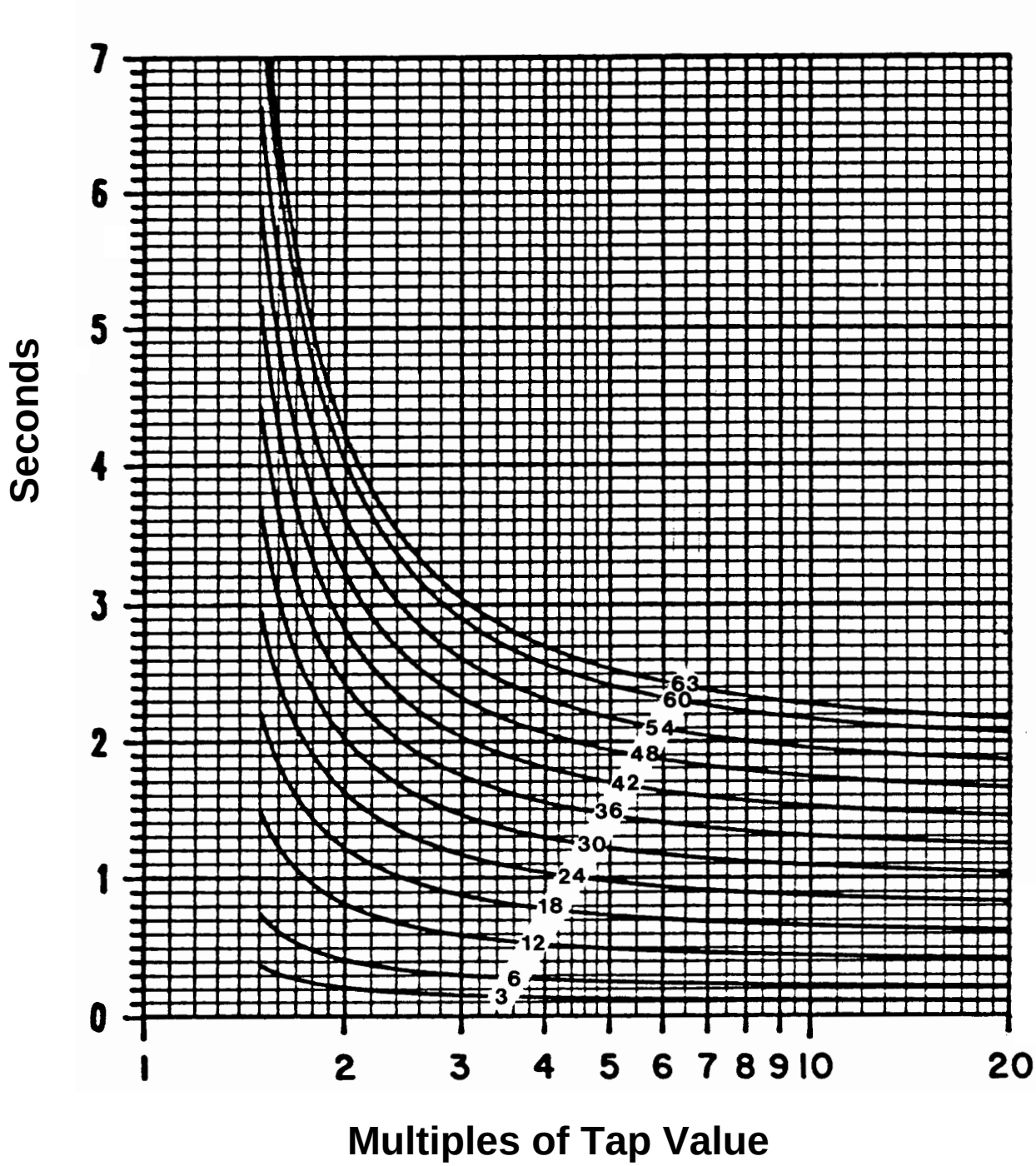

P = 1.0 K = 12756.06 T0 = 310.0 C = 1.35
T = [K/(M-C)^ P + T0] x TD/24000

Sub 2
619598

Figure 2-3: CO-6 Curve Characteristics

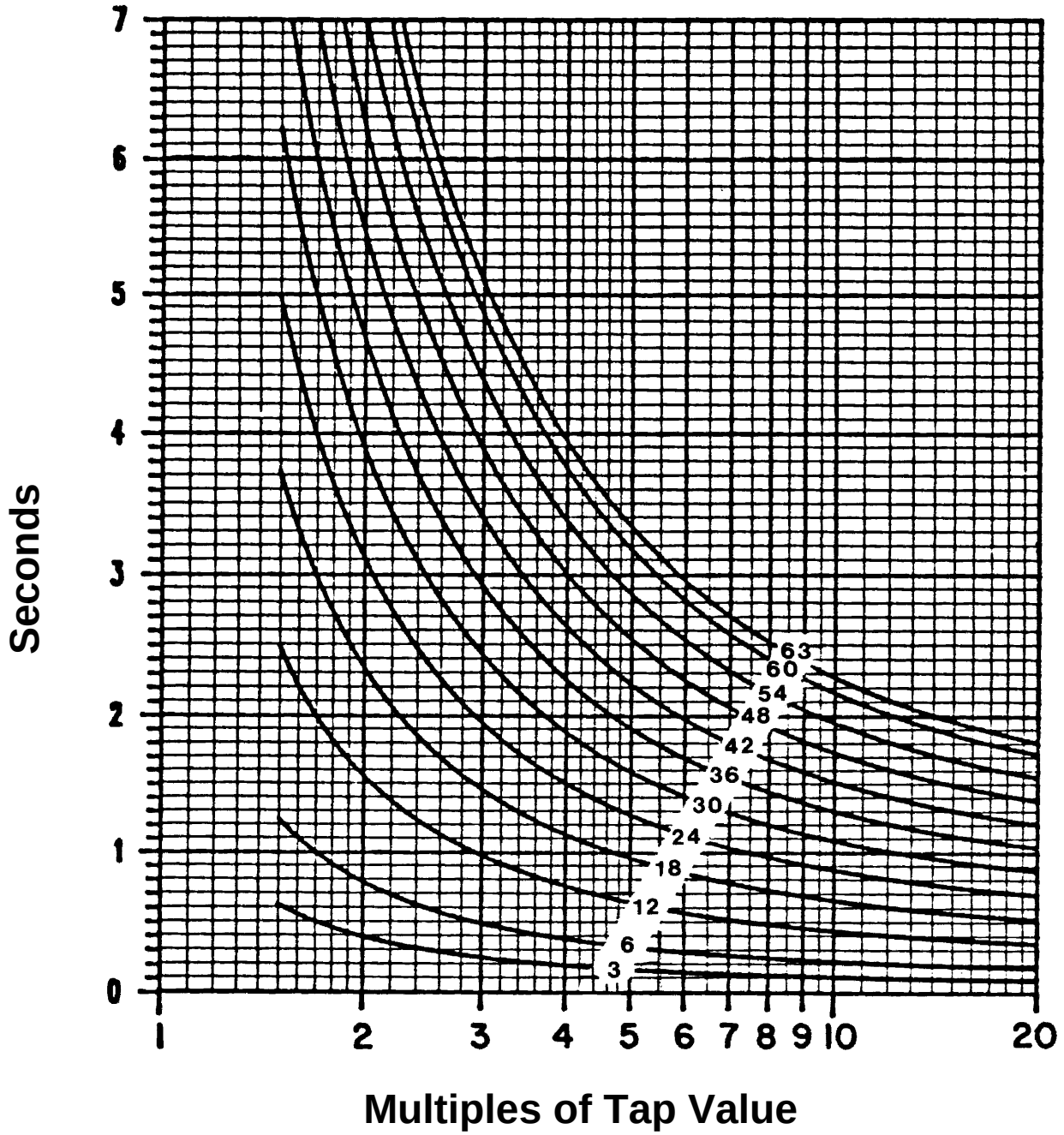

P = 1.0 K = 4122.08 T0 = 477.84 C = 1.27
T = [K/(M-C)^ P + T0] x TD/24000

Sub 2
619599

Figure 2-4: CO-7 Curve Characteristics

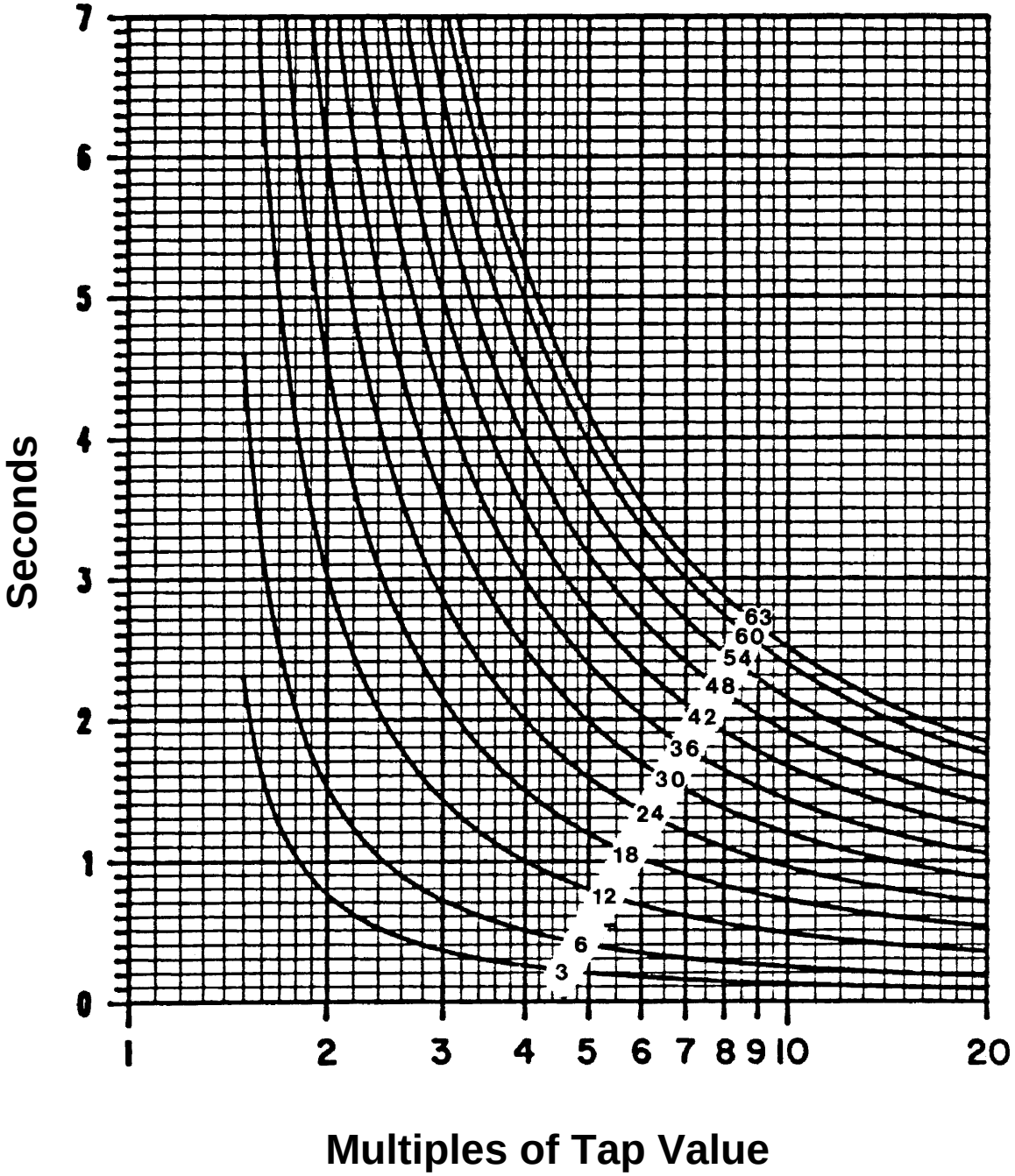

P = 1.0 K = 3120.56 T0 = 24.84 C = 0.8
T = [K/(M-C)^ P + T0] x TD/24000

Sub 2
619600

Figure 2-5: CO-8 Curve Characteristics

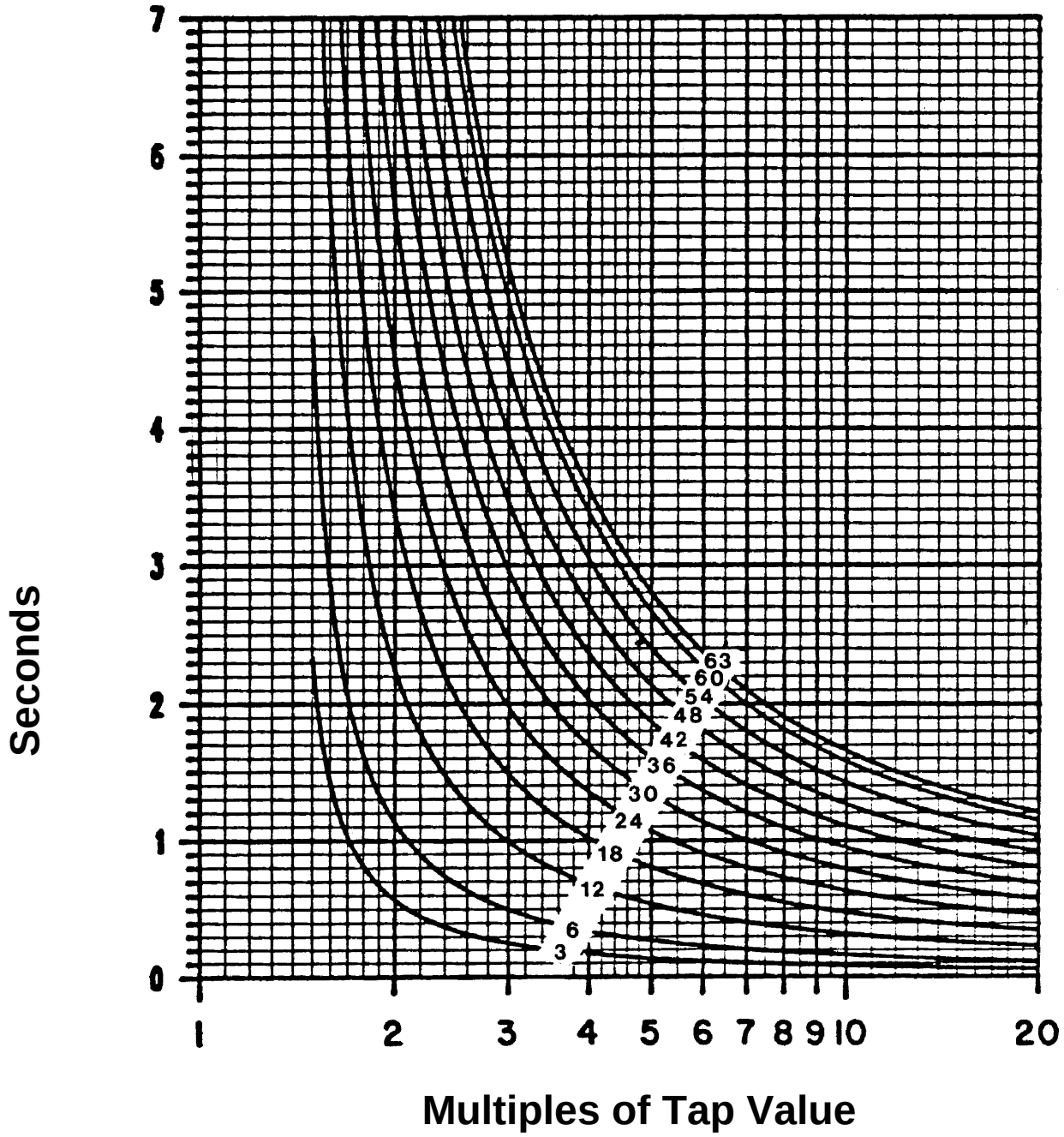

P = 1.0 K = 671.01 T0 = 784.52 C = 1.19
T = [K/(M-C)^ P + T0] x TD/24000

Sub 2
619601

Figure 2-6: CO-9 Curve Characteristics

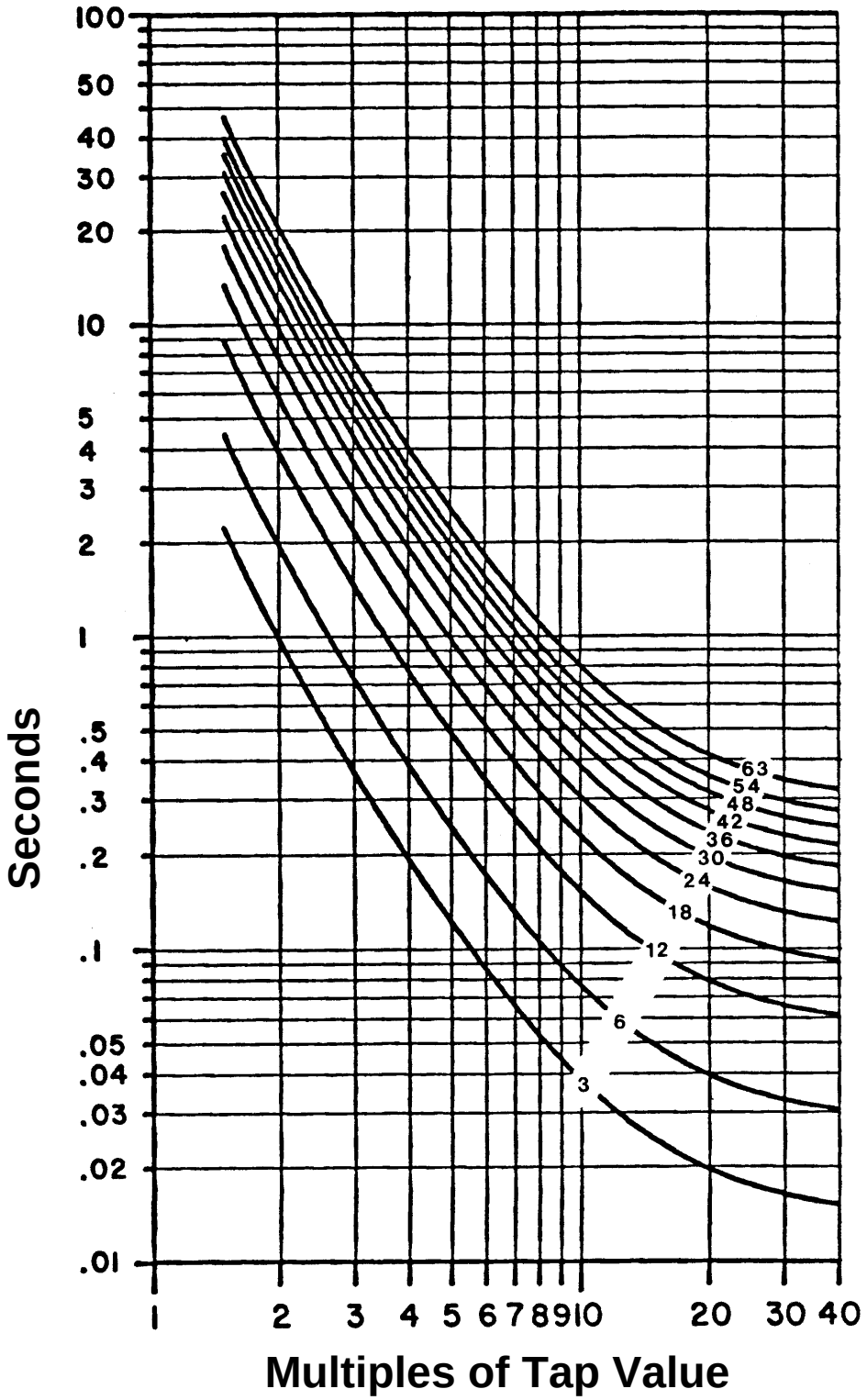

P = 1.0 K = 1376/8.94 T0 = 8196.67 C = 1.13
T = [K/(M-C)^ P + T0] x TD/24000

Sub 2
619602

Figure 2-7: CO-11 Curve Characteristics

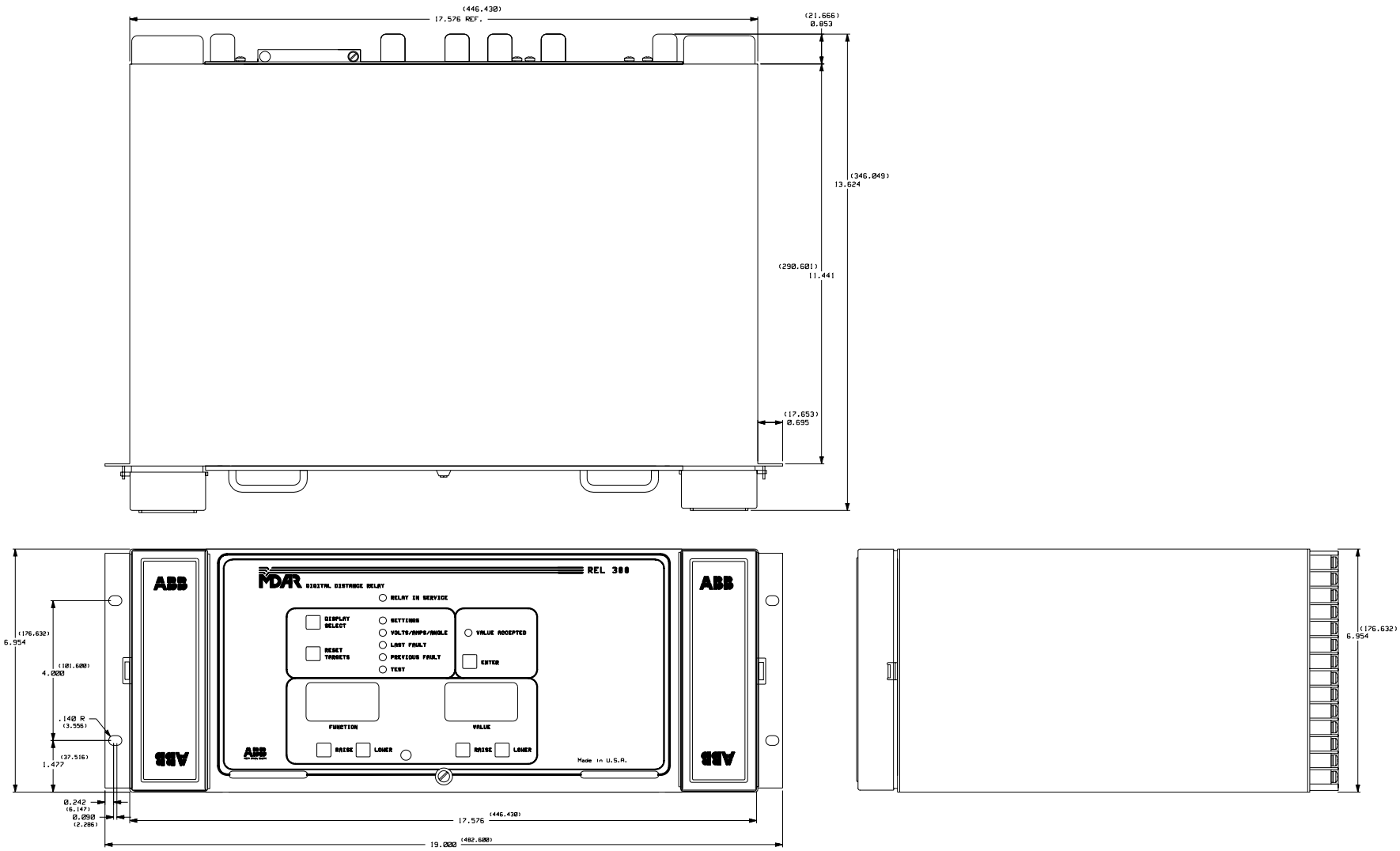

Sub 2
2403F38

Figure 2-8: REL300 Outline Drawing

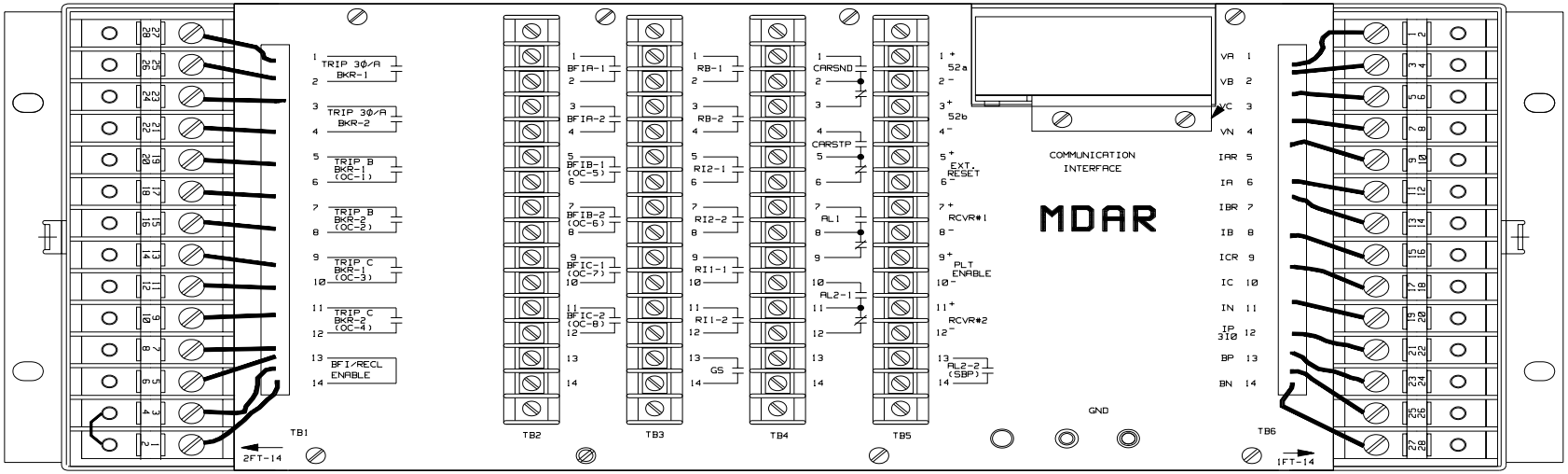

Sub 14
2420F01

Figure 2-9: REL300 Terminal Connections (Rear View with FT-14 Switches)

Section 3. APPLICATIONS AND ORDERING INFORMATION

WARNING

Before energizing the relay, check jumper #3 on the Microprocessor module for phase sequence rotation ABC or ACB. Remove jumper #3 for system ABC rotation. Refer to Section 1.8 (page 7) for ACB system. Check jumper #2 which should be in the 1-2 position for three-pole trip or programmable contact outputs. Jumper #2 should be in the 2-3 position for single pole trip.

3.1 NON-PILOT SYSTEM

The REL300 non-pilot relay system detects faults in three zones of distance, phase and ground. Zones 1 and 2 are forward set; Zone 3 can be set to forward or reverse. There is also a separate optional pilot zone (see Section 3.5, page 39). The fault locator can be set to indicate fault distance in miles or kilometers.

The R-X Diagram, shown in Figure 3-1, describes the characteristics available with REL300. Zone 1 phase and ground settings are chosen to provide substantial coverage of the protected line without overreaching the next bus. A setting of 80% of the line impedance is typical. Faults occurring within the reach of the Zone 1 measurement cause direct tripping without regard to any action occurring at the remote terminal. Zone 2 settings are chosen to assure that faults occurring on the next bus are recognized. Settings are chosen (independent of the Zone 1 settings), generally to be 120 to 150% of the line impedance. Any fault occurring on the protected line will be recognized by this Zone 2 measurement (within the fault resistance and current limitations of the relaying system). Zone 2 tripping occurs with time delay (T2) or, where equipped with pilot provisions, at high speed, subject to the constraints imposed by the pilot channel for the particular pilot system selected. The Zone 3 measurement is directional, and may be chosen to respond to forward or reverse faults. The reverse sensing option is chosen for the blocking system where the reverse fault carrier start function is required. It is also used in conjunction with the T3 trip function, chosen to coordinate with adjacent terminal Zone 2 timing. The forward sensing option produces time delayed backup to other devices sensing forward faults. Blinder measurements (B1, B2, B3, B4) are available for out-of-step sensing. The inner blinder (as a standard function) also restricts the trip zone of each of the 3-phase fault measuring units.

3.2 LINE MEASUREMENT TECHNIQUES

Line measurement techniques applied to each zone include:

- Single-Phase-To-Ground fault detection
- 3-Phase fault detection
- Phase-to-Phase fault detection
- Phase-to-Phase-to-Ground fault detection

NOTE: **IOM is used to supervise all ground units and IM is used to supervise all phase units, including Zone 1,2,3 and pilot for tripping.**

3.2.1 Single-Phase-to-Ground

Single-phase-to-ground fault detection (see Figure 3-2, page 52) is accomplished by 3 quadrature polarized phase units (ϕA, ϕB, ϕC). Equations 1 and 2 (below) are for operating and reference quantity, respectively. The unit will produce output when the operating quantity leads the reference quantity.

$$V_{XG} - [I_X + k_O I_O] Z_{CG} \quad (1)$$

$$k_0 = \frac{Z_{oL} - Z_{1L}}{Z_{1L}} = ZR\angle(GANG - PANG) - 1$$

$$I_0 = \frac{1}{3}(I_A + I_B + I_C)$$

Vector (V_Q) (2)

where V_{XG} = V_{AG}, V_{BG}, or V_{CG}

I_X = I_A, I_B or I_C

Z_{1L}, Z_{0L} = positive and zero sequence line impedance in relay ohms

Z_{CG} = Zone reach setting in secondaryohms of Z_{1L} for ϕGF fault

V_Q = quadrature phase voltages, i.e., V_{CB}, V_{AC} and V_{BA} for ϕA, ϕB and ϕC units, respectively

3.2.2 Three-Phase

Three-phase fault detection (see Figure 3-3) is accomplished by the logic operation of one of the three ground units, plus the 3ϕF output signal from the faulted phase selector unit.

However, for a 3-phase fault condition, the computation of the distance units will be:

V_{XG} - $I_X Z_{CP}$ (3)

and (V_Q) (4)

where V_{XG} = V_{AG}, V_{BG}, or V_{CG}

I_X = I_A, I_B or I_C

Z_{CP} = Zone reach setting (PLTP, Z1P Z2P, and Z3P) in secondary ohms of $\mathbf{Z}_{1L}$ for multi-phase faults

V_Q = Quadrature phase voltages, i.e.,
V_{CB}, V_{AC} and V_{BA} for ϕA, ϕB and ϕ C units, respectively

If the REL300 detects that all three voltages are less than 1 volt, the pre-fault voltages (memory action) are used as reference for Zone 1 tripping. For Zone 2 and Zone 3, the memory action is in effect if all three voltages are less than 7 volts.

3.2.3 Phase-to-Phase

The phase-to-phase unit (see Figure 3-4) responds to all phase-to-phase faults, phase-to-phase-to-ground faults, and some single-phase-to-ground faults. Equations (5 and 6) are for operating and reference quantity, respectively. They will produce output when the operating quantity leads the reference quantity.

$$(V_{AB} - I_{AB}Z_{CP}) \quad (5)$$

$$(V_{CB} - I_{CB}Z_{CP}) \quad (6)$$

3.3 MEASUREMENT ZONES

REL300 performs line measurement within 3 zones of the transmission line (Zone 1, Zone 2, Zone 3), and one optional pilot zone. When the REL300 functional display “STYP” is set at “3ZNP”, it will perform the 3-zone non-pilot function.

When the REL300 trips, the trip contacts will be sealed-in as long as the trip coil current flow exists. The trip contacts can be delayed dropout (by 50 ms) after the trip current is removed, providing a jumper (JMP4) on the Microprocessor module is connected.

3.3.1 Zone 1 Trip

For Zone 1 phase faults, the Z1P unit will identify the fault and operate. The 3ϕ fault logic is supervised by the load restriction logic via AND131C and AND 131 (Figure 3-18a) and is also supervised by the selectable OSB, as shown in Figure 3-5, page 54. Outputs of Z1P and IM satisfy AND-2 and provides a high-speed trip (HST) signal from OR-2 to operate the trip output telephone relay. The trip circuit is monitored by a seal-in reed relay (S), which is in-series with each trip contact in the tripping circuits. The “S” relay will pick up if the trip current is higher than 0.5 Amp. The operation of the “S” contact will turn-on the breaker trip indicators (with memory), and feeds back to OR-4 to hold the trip relay in operation until the breaker trips and 52a contact opens (not shown in Figure 3-5). The TRSL signal plus the output signal from AND-2 turns on the Zone 1 phase trip indicator (Z1P). The breaker trip and Zone 1 phase trip indicators are memorized. They can be reset by external RESET voltage or through remote communication. By pushing the RESET push-button, the flashing LED will be reset, but the fault information will still remain in memory.

NOTE: The operating time of the Trip relay is 2 ms and the BFI relay is between 10 and 15 ms. The difference of the pickup times should be compensated in the breaker failure scheme.

The Z1P 3ϕ trip logic AND-131 is supervised by both the conventional OSB and the FDOPA & FDOPB & FDOPC, for more security on some special power system applications. (Refer to

section 3.4.12 for detailed FDOP unit.) ZIP logic AND-2 is also supervised by the IM setting, the medium set phase overcurrent unit.

Similar operations exist for Zone 1 single-phase-to-ground faults. The Z1G unit sees the fault and operates; the IOM and FDOG units also operate, satisfying AND-3. Tripping occurs via OR-2 with Zone 1 ground trip indication Z1G. Logic AND-3 is also supervised by the signal of RDOG (reverse directional overcurrent ground) for security purposes.

The Z1G unit is also supervised by the signal of unequal-pole-closing and RDOG.

A two-out-of-three “leading phase blocking” logic is included for solving the overreach problem of the single-phase ground distance units, which may respond to a ϕϕG fault.

The high-speed trip (HST) signal also is connected to the reclosing initiation logic.

Either or both Zone 1 phase and Zone 1 ground function(s) can be disabled by setting the Z1P and/or Z1G to the “**OUT”** position. Zone 1 trip can be delayed by setting T1 = 0 to 15 cycles. The delay time is for a non-pilot 3PT backup, with another system operating in SPT mode.

3.3.2 Zone 2 Trip

For Zone 2 phase faults, the Z2P unit will see the faults plus the output of IM and will operate the Zone 2 phase timer (T2P). AND-4 output plus the T2P timer output satisfy AND-18, as shown in Figure 3-6. The AND-18 output provides time delay trip signal TDT via OR-3. Signal TDT picks up OR-4 (Figure 3-5, page 54) and operates the trip relay. The tripping and targeting are similar as described in Zone 1 trip except for Zone 2 phase time delay trip indicator (Z2P).

Similar operation occurs for Zone 2 single-phase-to-ground faults. The Z2G unit sees the fault and operates. This, plus the operation of the IOM, FDOG and T2G satisfy AND-19, and provide the TDT signal via OR-3 with Zone 2 ground time delay trip indicator (Z2G).

The single-phase ground distance units may respond to a ϕϕG fault. The output of the Z2G unit plus the operation of the ϕϕ selection will trip the Z2P via OR-157, T2P and AND-18. Leading phase blocking is unnecessary for an overreach Zone device.

The TDT signal can be connected to the reclosing block logic. The settings for Zone 2 timers (phase and ground units) are independent, as follows:

- T2P (Zone 2 phase)
- T2G (Zone 2 ground)

The range of the timers is as follows:

- T2P and T2G (0.1 to 2.99 seconds or Block)

Either or both Zone 2 phase and Zone 2 ground function(s) can be disabled by setting Z2P and/ or Z2G to the BLK position.

3.3.3 Zone 3 Trip

For Zone 3 phase faults, the Z3P (forward or reverse looking, depending on the Z3FR setting) unit will identify the faults, plus the IM output will operate the Zone 3 phase timer T3P. AND-6

output plus the T3P timer output satisfy AND-20 as shown in Figure 3-7. The AND-20 output provides time delay trip signal (TDT) via OR-3. Signal TDT picks up OR-4 (Figure 3-5, page 54) and operates the trip relay. The tripping and targeting are similar to Zone 1 trip, except for the Zone 3 phase time delay trip indicator (Z3P).

For Zone 3 single-phase-to-ground faults, Z3G identifies the fault and operates. This, plus the operation of the IOM, satisfies AND-7; the TDT signal then trips via OR-3 with Zone 3 ground time delay trip indicator Z3G. The TDT signal can be connected to the reclosing block logic. For security, the Z3G unit is also supervised by the signal of FDOG when it is set for forward looking (or by the signal of RDOG when it is set for reverse looking) via logic OR-171B, AND-171C or AND 171D (as shown in Figure 3-7, page 56).

A similar operation for $\phi\phi$G faults (shown in Zone 2), is applied to Zone 3, through OR-170, T3P and AND-20 gates.

The settings for Zone 3 timers (phase and ground units) are independent, as follows:

- T3P (Zone 3 phase)
- T3G (Zone 3 ground)

The range of the timers is as follows:

- T3P and T3G (0.1 to 9.99 seconds or Block)

Either or both Zone 3 phase and Zone 3 ground function(s) can be disabled by setting Z3P and/or Z3G to the BLK position.

3.3.4 Zone 1 Extension

This scheme provides a higher speed operation on end zone faults without the application of pilot channel.

If the REL300 functional display “STYP” is set on Z1E position, the Z1P/Z1G unit will provide two outputs: one is overreach which is set at 1.25 x Z1 reach by the microprocessor, and one is the normal Z1 reach. A single shot instantaneous reclosing device should be used when applying this scheme. The targets Z1P/Z1G will indicate either Z1 trip and/or Z1E trip operations. The other functions (e.g., Z2T, Z3T, ac trouble monitoring, overcurrent supervision, IT, CIF, unequal-pole closing load pickup control, load-loss acceleration trip, etc.) would remain the same as in the basic scheme (3ZNP).

For a remote internal fault (refer to Figure 3-8, page 57), either Z1P or Z1G will see the fault since they are set to overreach. High speed trip will be performed via the normal Z1T path (Figure 3-5, page 54), i.e., AND-2 (or AND-3), OR-2. HST signal operates the instantaneous reclosing scheme. The breaker recloses and stays closed if the fault is automatically cleared.

Target Z1P and/or Z1G will be displayed. Once the breaker trip circuit carries current, it operates the logic OR-5 (not shown), produces output signal TRSL, and satisfies logic AND-26 for 5000 ms (Figure 3-8). The output signal of AND-26 will trigger the Z1P/Z1G reach circuit, constricting their reaches back to the normal Zone 1 for 5000 ms. During the reach constricting periods, if the breaker is reclosed on a Zone 1 permanent fault, it will retrip again. If the breaker is reclosed on an end-zone permanent fault, the normal Z2T will take place.

For a remote external fault, either Z1P or Z1G will see the fault since they are set to overreach. High speed trip will be performed. HST signal operates the instantaneous reclosing scheme. The breaker recloses and stays closed if the fault has been isolated by the adjacent line breaker. However, if the adjacent line breaker fails to trip, the normal remote back up will take place.

NOTE: The reaches of Z1E are based on the Zone 1 settings multiplied by a factor of 1.25 (i.e., 1.25 x Z1P and 1.25 x Z1G).

3.4 REL300 NON-PILOT FEATURES

The following features are standard with the Non-Pilot REL300**:**

3.4.1 3-Zone Distance Phase and Ground Relay with Reversible Zone 3 Phase and Ground

There are four impedance units per zone: one phase-to-phase unit and three phase-to-ground units. Zone 3 can be set to forward or reverse for carrier keying or back-up tripping. **For a pilot system, Z3FR has to be set to reverse (REV) for correct application.**

3.4.2 Directional or Non-Directional Inverse Time Overcurrent Ground Backup Unit

The overcurrent ground backup (GB) unit is to supplement the distance ground protection on high resistance ground faults. It provides an inverse time characteristic which is similar to the conventional CO characteristics (see Figure 2-1 through 2-7). The time curves can be selected by the GBCV Setting. The time dial is set by the “GTC” value. The unit can be selected as directional by using the “GDIR” (YES) setting and the pickup value by GBPU. The directional GB function uses the torque control approach, as indicated in Figure 3-9. The GB function can be disabled by setting the GBCV to the OUT position.

The directional unit is determined by the setting of “DIRU” which can be set to zero sequence voltage (ZSEQ), dual (DUAL, zero sequence voltage and/or zero sequence current) or negative sequence (NSEQ, negative sequence voltage and negative sequence current) for polarization (see 3.4.11, Selectable Ground Directional Unit, ZSEQ / NSEQ / DUAL).

3.4.3 Loss of Potential Supervision (LOP)

The ac voltage monitoring circuit is called loss-of-potential circuit. In order to prevent undesirable tripping due to the distance unit(s) pickup on loss-of-potential, the following logic is used:

- (V_{AN} or V_{BN} or V_{CN} <7Vac) or (3Vo>7Vac) and not ΔI or not ($3I_O$>IOS)

This means that the LOPB will be set if any one of the voltages is below 7Vac (without ΔI), or if the system detects 3Vo without 3Io (or $3I_O$ < IOS) as shown in Figure 3-10a. The (loss-of-potential condition satisfies AND-1; output signal of AND-1 starts the 8/0 and 0/500 ms timers. The timer output will satisfy AND-1C if there is no output from AND-1B. Output signal of AND-1C will block all the distance unit (Z) tripping paths via AND-2, AND-3, AND-4, AND-5, AND-6, AND-172 (also blocks AND-191 and AND-187 for Pilot Systems), if LOPB is set at YES. Although all distance units are blocked for tripping, the ground backup (GB) and high-set overcurrent units (ITP and ITG) are operative and converted to non-directional automatically. The LOPB blocking function can be disabled by setting the LOPB functional display at NO position. The output of the LOP timer will de-energize the alarm 1 (AL1) relay and cause the failure

alarm. If the LOPB is set at “ALL” and LOP condition exists, the relay will block all types of trip and turns off the “IN SERVICE” LED.

When applying the LOPB to DIST, it is the intent to block all distance units from tripping, should LOP condition exist. However, under a special system condition (see Figure 3-11), both circuits are energized without load current; with no source at terminal B, fault at F where F is near terminal A, Zone 2 relay at terminal B will be blocked by LOP, and may fail to trip. This is because the relay at B sees no current, and a low voltage condition exists before circuit breaker A opens. Another special system condition involves two parallel lines with two symmetrical sources at both ends. For an evolving flashover fault, at a point equidistant from both terminals, the conventional LOPB logic will block trip, because the first external fault generates “3V0 and not $3I_0$“on the protected line. Logic AND-1A, 1B, -1C, and -1E 150/0, 3500/200 ms timers circuit, in Figure 3-10a, are to solve these problems. This logic unblocks the LOPB circuit and provides a 3500 ms trip window for the distance units to trip if the fault current is detected within 150 ms after LOP has been set up. This logic has no effect on the conditions:

- if ΔI signal occurs ahead of LOP, <u>or</u>
- if LOP and ΔI signals occur simultaneously

NOTE: **The loss of potential logic for firmware versions 2.23, 2.22, 2.21 and 2.20 are shown in Figures 3-10a through 3-10d respectively.**

The LOPB has three setting values as follows:

a) NO – No trip block on LOP condition.

b) DIST – Block the distance units. Converts the high set (ITP & ITG) and ground backup (GB) to non-directional automatically for the setting of DIRU = ZSEQ or NSEQ if LOP condition occurs. For the setting of DIRU = DUAL with Ip > 1.0 ampere, the ITG and GB maintain their directionality depending on the 3I0 and Ip.

c) ALL – Block all types of trip and turn off the “IN SERVICE” LED.

3.4.4 Loss of Current Monitoring (LOI)

The ac current monitoring circuit uses I_{0M} (and not Vo) as criterion, as shown in Figure 3-12. Under ct short circuit or open circuit condition, I_{0M} (and not Vo) satisfies AND-23; the output signal of AND-23 starts the 10/0.5 seconds timer. (Version 2.20 timer is 0.5/0.5 seconds.) The timer output turns “ON” the non-memory LOI indicator, which is shown in the Metering mode, and drops out the AL1 relay (Failure Alarm). If the LOI condition exists and LOIB is set at YES, the trip will be blocked after the 10 seconds.

3.4.5 Overcurrent Supervision

For REL300, as shown in Figure 3-13, the distance units do not require overcurrent supervision; because the relay normally operates in a background mode, they will not start the Zone 1 and pilot impedance computation until a phase current or a phase voltage disturbance is detected. This approach can minimize the load problem when setting the phase overcurrent units. However, in order to meet the traditional practice, a medium set phase overcurrent unit IM (IAM or IBM or ICM) has been added to REL300 version 2.20 to supervise Z1P/Z2P/Z3P/PLTP trip functions, as shown in Figure 3-13. (Note older versions do not have this unit).

NOTE: **This unit should not be set to limit the Zone 3 reach, and traditionally should be set above the load current.**

For coordination purposes the ground trip units (Z1G, Z2G, Z3G, PLTG, and FDOG) are supervised by the medium set ground overcurrent unit (I_{OM}). The **IOS** setting and RDOG are used for carrier send in a Pilot Blocking system.

3.4.6 Instantaneous Forward Directional Overcurrent Trip/Highset Trip Logic

The instantaneous overcurrent units (I_{AH}, I_{BH}, I_{CH} and I_{OH}) are normally set forward directional and high to detect those faults which occur in the Zone 1 area, therefore, their tripping will occur via OR-2 for HST, as shown in Figure 3-14 (page 61). These high set trip functions can be disabled by setting the ITP (phase) and/or ITG (ground) to the OUT position. The directional unit (ITP and ITG) will be automatically converted to non-directional protection for the setting of DIRU = ZSEQ or NSEQ if the LOP condition occurs and the setting of LOPB = DIST. For the setting of DIRU = DUAL with Ip > 1.0 ampere, the ITG and GB maintain their directionality depending on the 3I0 and Ip. For IP <1 ampere, the directionality is determined by the voltage polarization (3I0 & 3V0).

In order to avoid a false trip during the clearing of a reverse fault, an ITG transient block logic is added. The ITG trip will be delayed for 2 cycles if a forward fault is immediately after a reverse fault. This function was added in Version 2.23 and is not in previous versions.

3.4.7 Close-Into-Fault Trip (CIFT) and Stub-Bus Protection (SBP) Logic

Close-Into-Fault and Stub-Bus- protection functions supplement the distance unit operation for installations where line-side potential sources are used for the distance relaying. The logic for both functions is combined as shown in Figure 3-15a (page 62), and is under the control of a single setting, CIF. In a change from earlier firmware versions, a modified CIFT logic employing a 200/0 millisecond delay timer on the low voltage sensing, can be selected instead of the standard CIFT logic. This application is special in nature, and will be discussed later.

The CIF setting has six values, as follows:

VALUE	MEANING
OUT	No CIFT or SBP selected
CF	Standard CIFT, without timer; No SBP
CFT	Modified CIFT, with timer; No SBP
STUB	SBP logic; No CIFT
SCF	SBP plus standard CIFT
SCFT	SBP plus modified CIFT

The CIFT logic employs low voltage sensing functions L_{VA}, L_{VB}, and L_{VC}, which deliver a logic one when the particular phase-ground voltage is below the L_V setting, adjustable from 40 to 60 volts in one volt increments. Current sensors are also employed, I_{AL}, I_{BL}, and I_{CL}, which deliver a logic one if the particular phase current is above the IL setting. Additional current sensing of $3I_0$ greater than the I_{OM} setting is also employed. In the standard logic, for 180 msec after the breaker is closed (52b opens), simultaneous low voltage and current sensing for 16 msec, implying a closure into a fault, produces a CIF trip via OR-22B and OR-3, and reclose blocking (RB). A CIF target will appear on the relay fault record and display.

Stub-Bus protection employs the 89b switch from an open line disconnect, in conjunction with the CIFT current sensing functions, to high-speed trip on overcurrent only, for faults on the stub between the current transformers and open disconnect. This is to compensate for the lack of the potential source, connected on the line side of the disconnect. Operation is independent of the operation of the breaker(s) and the line voltage condition. Tripping, reclose blocking and targeting are the same as for CIFT.

The modified CIFT logic is employed for the special application shown in Figure 3-15b (page 62). Two relays, looking in opposite directions, control a single breaker and share a common 52b input and a common set of voltage transformers, located on one side of the breaker. Each relay trips the main breaker and the load breaker on the power transformer secondary, for faults on the line section being protected. The standard CIFT logic was found to produce false tripping of one of the load breakers upon reclosing after a successful initial trip, if the fault still persisted. This was due to “arming” of the CIFT logic by the common 52b, in the relay which did not trip for the initial fault.

The 200/0 msec timer delays the sensing of low voltage and momentarily disables the CIFT function during the reclose situation. This timer was selected to be greater than the 180 msec reset time of the 52b, but less than the minimum reclose dead time. For this logic to work properly, the following application rules apply:

1) For the relay with *bus-side potential*, that is cts and vts on the same side of the breaker *(Relay 1)*, *set CIF to OUT.* With bus-side potential, CIF logic is not needed and may misoperate for some situations if enabled.
2) For the relay with *line-side potential*, that is cts and vts on opposite sides of the breaker *(Relay 2)*, *set CIF to CFT*. Also *be sure that the minimum reclose dead time is greater than 200 msec.* Otherwise, a delayed CIF trip, or possibly no CIF trip, will occur when reclosing into a forward fault.
3) Set LOPB to “DIST” or “NO”. For the setting of LOPB = “ALL”, the relay may not trip under the reclose-on-fault condition because the LOPB may be set and block any type of tripping.

Standard CIFT logic, without the timer, should be selected for all applications other than this two-relay-one-breaker scheme.

3.4.8 Unequal-Pole-Closing Load Pickup Logic

The ground units may pick up on a condition of load pickup with unequal breaker pole closing. The high speed ground units (Z1G, **and FDOG) s**hould be supervised under this condition. This can be achieved (as shown in Figure 3-16, page 63) by inserting a 0/50 ms timer (controlled by the 52b signal) to supervise the Z1G trip AND-3 (Figure 3-5, page 54) and FDOG/IOM trip AND-188 (Figure 3-21, page 67 and 3-26, page 71). It should be noted that the 50 ms time delay will have no effect on a normal fault clearing.

Pilot distance ground PLTG unit is not required to have this supervision, because its tripping is supervised by the pilot logic.

On internal ground faults, if the mechanical actuator of the circuit breaker operates but the arc does not extinguish (e.g., due to low gas pressure), the closing action of the 52b contact, connected to REL300, will reset the Z1G trip path AND-3, and ultimately, the BFI contact. This may introduce interruption to the BF scheme if BFI logic does not provide seal-in circuit. The AND-3C logic in Figure 3-16 (page 63) will solve this problem.

3.4.9 Selectable Loss-of-Load Accelerated Trip Logic (LLT)

NOTE: The LLT function need not be set for normal operation of the relay. While it can provide faster tripping for end-zone faults, it may not be usable in all situations. It should be applied with caution, based on thorough knowledge of the system characteristics where the relay is applied. It is definitely not applicable where maximum tapped load may exceed minimum through-load in the protected line.

The load-loss speedup Zone 2 trip logic senses remote 3-pole clearing on all faults except 3ϕF to complement or substitute for the action of the pilot channel, to speed up trip at the slow terminal. Logic includes AND-24, AND-25, OR-13, 0/32, and 10/0 ms timers (as shown in Figure 3-17, page 64). Under normal system conditions, 3-phase load currents are balanced, the low set overcurrent units (IAL, IBL, ICL satisfy both AND-24 and OR-13). On remote internal faults, Z2P or Z2G picks-up and satisfies the third input to AND-25 via OR-6. However, the signal from AND-24 is negated to AND-25, therefore, AND-25 should have no output until the remote end 3-pole trips. At this time, the local end current will lose one or two phases, depending on the type of fault (except for the 3-phase fault). The AND-24 output signal changes from “1” to “0” and satisfies AND-25. After 10 ms, this output by-passes the T2 timer, and provides speedup Zone 2 trip. The (10/0 ms) time delay is for coordination on external faults with unequal pole clearing. The 0/32 ms timer is needed for security on external faults without load current condition. Target LLT will turn on after a LLT trip. The LLT function is selected by setting “YES, FDOG, NO”, where YES = LLT with Z2 supervision; FDOG = LLT with both Z2 and (FDOG/ I_{OM}) supervision; the NO = LLT function is not used.

LLT is not recommended for three-terminal lines due to difficulty in determining proper settings (IL) and complicated infeed from the third terminal.

3.4.10 Current or Voltage Change Fault Detector (ΔI, ΔV) and GS

The REL300 relay normally operates in the Background mode, where it experiences phase current or voltage disturbances. During background mode, the four input currents (I_A, I_B, I_C and I_P) and the three voltages (V_A, V_B, V_C) are sampled at a rate of 8 per cycle to test a line fault. When a phase disturbance (ΔI or ΔV) is detected, the relay enters a fault mode for several cycles or longer, to perform phase and ground unit distance computation for each goal. The criteria for determining a disturbance in the REL300 design are as follows:

1) Each phase ΔI :if $[I_{Kn} - I_{(K-1)n}] > 1.0$ amp.
   And $[I_{Kn} - I_{(K-1)n}] / I_{(K-1)n} \times 100\% > 12.5\%$

2) Each phase ΔV :if $[V_{Kn} - V_{(K-1)n}] > 7.0$ volts
   and $[V_{Kn} - V_{(K-1)n}] / V_{(K-1)n} \times 100\% > 12.5\%$

   Where n = 0,1, 2, 3, 4, 5, 6, 7 and
   K = number of cycles

For every voltage or current disturbance, the General Start (GS) relay will pick up for 3 cycles for starting external (fault) recorder.

3.4.11 Selectable Ground Directional Unit (ZSEQ/NSEQ/DUAL)

The ground directional unit (DIRU) contains three selections (ZSEQ, NSEQ and DUAL), which determine the operation of the forward directional overcurrent ground (FDOG) and reversed directional (RDOG). If the ZSEQ is selected, both FDOG and RDOG units will be operated as a zero-sequence voltage polarizing directional element. Forward direction is identified by the angle, if $3I_0$ leads $3V_0$, between 30° and 210°. The sensitivity of this element is $3I_0 > 0.5$A and $3V_0 > 1.0$ Vac. (Version 2.20 has $3V_0 > 3.0$ Vac.) If NSEQ is selected, both FDOG and RDOG will be operated by negative sequence quantities. The maximum sensitivity for the forward directional unit is when I_2 leads V_2 by 98°, with $V_2 \geq 1.0$ Vac and $3I_2 \geq 0.5$A.

If DUAL is selected, the FDOG and RDOG will be determined by current polarizing directional element (I_P) if the input current Ip is greater than 1 amp. The Ip current is from a separate polarizing source such as a power transformer neutral (ct). The maximum torque angle between $3I_0$ and I_P equals zero degrees, i.e., the forward direction is identified when $3I_0$ leads I_P by 0° to 90° or lags by 0° to 90°. The sensitivity of this element is $3I_0 > 0.5$ and $I_P > 1.0$ ampere. If Ip is less than 1 ampere, the FDOG will be determined by the zero sequence voltage polarizing element as the setting of ZSEQ.

3.4.12 Instantaneous Forward Directional Overcurrent Unit (FDOG) and Phase Unit (FDOP)

The instantaneous forward directional overcurrent ground function (FDOG) is a directional unit depending on the setting of DIRU as described in the preceding segment (3.4.11). FDOG is supervised by the IOM setting and controls Zone 1, Zone 2 and Zone 3 ground units for security purposes and also for pilot high resistance ground fault trip (FDOG/I_{OM}).

The phase directional unit (FDOP) is based on the angular relationship of a single-phase current and the corresponding pre-fault phase-to-phase voltage phasors. The forward direction is identified if the current phasor leads the voltage phasor. The pair of current and voltage phasors which are compared are I_A and V_{BA} (FDOPA), I_B and V_{CB} (FDOPB), I_C and V_{AC} (FDOPC). The three-phase fault detection of Zone-1 and pilot are supervised by FDOPA & FDOPB & FDOPC. The high set currents I_{AH}, I_{BH}, I_{CH} are supervised by FDOPA, FDOPB and FDOPC, respectively.

3.4.13 Instantaneous Reverse Directional Overcurrent Ground Function (RDOG)

Similar to FDOG, the instantaneous reverse directional overcurrent ground function (RDOG) supervises the ground units to prevent false trip.

3.4.14 Programmable Reclosing Initiation and Reclose Block

The REL300 system provides the following contact output for Reclosing Initiation and reclosing block functions (see Figure 3-19, page 66).

- RI1, used for Reclosing Initiation on single pole trip
- RI2, used for Reclosing Initiation on 3-pole trip
- RB, used for Reclosing Block

The operation of RI1, RI2 and RB contacts is controlled by the setting of the programmable Reclosing Initiation logic (as shown in Figure 3-19, page 66). The operation of either RI1, RI2, or RB must be confirmed by the signal of TRSL, which is the trip output of REL300 operation.

The External Pilot Enable Switch (see Figure 4-1, TB-5 terminals 9 and 10, on page 93), is used for enabling the pilot system externally. The PLT setting is similar to the external pilot enable switch, except it is set from the front panel (or remotely set via communication chain).

The most popular Reclosing Initiation practice is to have Reclosing Initiation on high speed (pilot, Zone 1 and high set) trip only. Programming can be accomplished by closing the pilot enable switch and setting the PTRI a**nd Z1RI** to YES (see Figure 3-19, page 66). AND-84 will produce logic to operate the RI2 relay when receiving signals from TRSL and AND-89 **and no signal from RB logic.** The program is further controlled by the TTYP setting: TTYP setting OFF: 3PRN provides no output, therefore, will not operate RI2.

TTYP setting 1PR: 3PRN will provide output “1” on single-phase-to-ground fault only and will operate RI2.

TTYP setting 2PR: 3PRN will provide output “1” on single-phase-to-ground fault or 2-phase faults, and will operate RI2.

TTYP setting 3PR: 3PRN will provide output “1” on any type of fault, and will operate RI2.

The PTRI, Z1RI, Z2RI and Z3RI settings are provided for programming on applications where the Reclosing Initiation on pilot, Zone 1, Zone 2 or Zone 3 trip is desired. Logic AND-62A is controlled by the signal of 3PRN, therefore, the setting of 1PR, 2PR and 3PR also affect the Z1RI, Z2RI and Z3RI.

In general, the Reclosing Block (RB) relay will operate on TDT (Time Delay Trip) or OSB (Out-of-Step Block condition). However, it will be disabled by the setting of Z1RI, Z2RI, and Z3RI signal.

The RI1 relay is normally used for the single-pole trip scheme. **A Breaker Failure Reclosing Block (BFRB) feature is available for pilot systems if RB is required for breaker failure squelch**. Refer to section 3.21 for the detailed information.

3.4.15 Output Contact and Opto-Input Tests

A “Push-to-Close” feature is included in order to check all output relay contacts, which include TRIP, BFI, RI1, RI2, RB, AL1, AL2, GS, Carrier Send, Carrier Stop and all programmable contacts (OC1 to OC8).The relay contact check is supplementary to the self-check because the Microprocessor self-check routine cannot detect the output hardware. In order to enable the contact test, jumper (JMP5) on the Microprocessor module must be connected. There are seven opto-inputs for 52a, 52b, Ext. Reset, RCVR-1, RCVR-2, PLT ENA AND SBP. Applying a rated dc voltage to any opto input(s), the display will show a non-zero code on the TEST mode to indicate the correspondent input path(s).

3.4.16 Sixteen Fault Data

The REL300 system saves the latest sixteen fault records for all zones. The latest two fault records can be accessed either via the front panel or via the communication port. Fault records 3 thru 16 can only be accessed via the communication port. On the front panel, the “LAST FAULT’ information is of the last fault, the “PREVIOUS FAULT” information is of the previous

fault. These displays contain target information. When targets are available, the LAST FAULT LED flashes. It flashes once per second if only the LAST FAULT contains targets. It will flash twice per second if two or more fault records are contained. These records can be deleted by applying a rated voltage to the Ext. Reset Terminals (TB5/5 and TB5/6), or through a remote communication interface. By pressing the Reset push-button, the LED will be reset to the Metering mode and the fault information will still be retained.

The activation of fault data storage is controlled by the selection of TRIP/Z2TR/Z2Z3 in the FDAT function, where:

TRIP --- start to store fault data only if trip action occurs.

Z2TR --- start to store fault data if Zone 2 units pick up or any trip action occurs.

Z2Z3 --- start to store fault data if Zone 2 or Zone 3 units pick up or any trip action occurs.

3.4.17 Out-of-Step Block (OSB) Logic

The Out-of-Step Blocking (OSB) logic (power swing block supervision) in REL300 is a double blinder scheme. It contains two blinder units, providing 4 blinder lines. The nature of the logic (shown in Figure 3-18a, page 64) is that the outer blinder 21BO must operate 50ms or more ahead of the inner blinder 21BI, in order for an OSB condition to be identified. The OSB logic is also supervised by the medium set (IM) phase overcurrent signal (AND-122 on Figure 3-18a). The OSB signal is a negated input to the AND-131 (Z1P), AND-147 (Z2P), AND-160 (Z3P), and AND-176 (PLTP) for supervising the 3-phase distance trip. In addition to controlling the OSB logic, the blinder units also may be used to supervise distance relay tripping. Phase distance unit tripping cannot take place unless 21BI operates. This prevents operation of the 3ϕ-unit of the distance relay on load. The OSB signal is also applied to the reclosing logic for initiating RB.

The following quantities are used for the blinder sensing:

Blinder Line	Polarizing	Operating
Left	$-j(V_{XG} + I_X R_C \angle(PANG–90°)$	$I_X \angle(PANG–90°)$
Right	$j(V_{XG} - I_X R_C \angle(PANG–90°)$	$I_X \angle(PANG–90°)$

where VXG = Phase to ground voltage, V_{AG} or V_{BG}

I_X = Phase current in ϕA or ϕB

R_C = Setting of the unit (RT or RU). RT for inner blinder (21BI), RU for outer blinder (21BO)

PANG = The positive sequence line impedance angle

Operation occurs if the operating voltage leads the polarizing voltage. The characteristics are as shown in Figure 3-18b, page 65.

Both inner and outer blinders are included in phases A and B for OSB detection on the SPT application. Blinder reaches are determined by the setting of RT and RU, respectively.

3.4.17.1 Security Logic for Subsequent Out-of-Step (OS) Condition

Model power system tests, when using a motor-generator-set, show that the Zone 1 impedance unit may overreach or respond to a reversed fault. This was attributable to motor-generator set instability following delayed clearing on an external fault. **In this case, following a delayed clearing of external faults, the relay system action is dependent of the location of the electrical center. The Zone 1 relay will operate and trip if the electrical center is within the Zone 1 reach. The conventional OSB logic can not distinguish this condition because it looks like a fault to the relay.**

Logic was added utilizing the inner blinder and Zone 1 sensing sequence, plus a 50 ms timing action (as shown in Figure 3-18a, page 64), AND-131A, AND-131B, AND-131C and OR-122A, to differentiate between a fault and a subsequent out-of-step condition. A **subsequent OS condition is identified if the inner blinder operates 50 ms ahead of the Zone 1 3ϕ unit.** This logic will not affect normal Zone 1 trip time, nor will it affect normal out-of-step blocking.

3.4.18 Optional Single-Pole-Trip (SPT)

Logic and Outputs Without Programmable Contact Option

The logic for Single-Pole-Trip operation provides the following functions (see Figure 3-20, page 67).

- Single-pole-trip (SPT) and single-pole reclosing initiate (RI1) on single-phase-to ground faults.
- Three-pole-trip (3PT) with three-pole-reclosing initiate (RI2) on all multi-phase faults.
- Three-pole-trip with or without three-pole reclosing initiate on all faults if the functional display trip-mode selector “TTYP” is not set on the SPR or SR3R position.
- Three-pole-trip and reclosing block (RB) on unsuccessful reclosing.
- Three-pole-trip and reclosing block on “sound phase fault” (SϕF) during single-phasing.
- Three-pole-trip and reclosing block when the single phasing limit timer (62T, 300-5000,in 50 ms steps) is timed out to prevent overheating on generator(s).

When applying SPT, the functional display TTYP settings (OFF/3PR/SPR/SR3R) provide the following operating modes (in Table 3-3, page 77).

3.4.19 Oscillographic Data

The oscillographic data has 8 samples per cycle, 1 cycle pre-trigger and 7 cycles post-trigger. It includes 16 events and 24 digital intermediate targets (test points). The data can be accessed via the communication port.

WARNING

The OSC data will be deleted after the dc power is turned off.

The oscillographic data is controlled by the selection of TRIP/Z2TR/Z2Z3/ΔVΔI in the OSC function, where:

TRIP — start data taken only if trip action occurs

Z2TR — start data taken if Zone 2 units pick up or any trip action occurs.

Z2Z3 — start data taken if Zone 2 or Zone 3 units pick up, or any trip action occurs.

ΔVΔI — start data taken if ΔI, ΔV, Zone 2 or Zone 3 units pick up, or any trip action occurs.

NOTE: See 4.9 for ΔVΔI setting.

3.5 PILOT SYSTEM

The REL300 functional display (see Section 4, Table 4-1, Sheet 1 of 3 on page 96) Function Field “STYP” is used for pilot system selection, as follows:

- Non-pilot, 3 zone distance
- Zone 1 extension (non-pilot)
- POTT (Permissive Overreach Transfer Trip/Simplified Unblocking).....(pilot)
- PUTT (Permissive Underreach Transfer Trip).....(pilot)
- BLK (Blocking).....(pilot)

The following settings are recommended for POTT and BLOCKING systems:

OSC	-	Z2Z3
FDAT	-	TRIP
FDGT	-	longer than 3 cycles
PLTP/PLTG	-	150% overreach the next bus
Z1P/Z1G	-	80% of the protected line
Z3P/Z3G	-	100% of the reversed line
Z3FR	-	REV

3.5.1 Permissive Overreach Transfer Trip (POTT)/Simplified Unblocking

If the functional display “STYP” is set at the POTT position, REL300 will perform either the POTT scheme or the Simplified Unblocking scheme, depending on the applied pilot channel.

The basic operating concepts of a POTT scheme are:

1) Pilot relays (PLTP/PLTG) are set to overreach the next bus.

2) Pilot channel is a frequency shift type device; its signal may be through either metallic wire or microwave.

3) Transmitter frequency should be different at each terminal: channel is normally operated on a guard frequency; and the channel frequency will be shifted from guard to trip when the pilot relay(s) are operated; and pilot trip is performed when the pilot relay(s) operate(s) and a pilot trip frequency signal from the remote end is received.

The basic operating concepts of a Simplified Unblocking scheme are the same as the POTT scheme, except for differences in application.

Pilot channel is a frequency-shift type power line carrier. The transmitter frequency must be different at each terminal. It is normally operated on a blocking frequency and will be shifted to an unblocking frequency when the pilot relay(s) operate(s). The carrier receiver should provide logic for which, in the event of loss-of-channel or low SNR ratio, the pilot trip circuit is automatically locked out after a short time delay. Pilot trip is provided, however, if the tripping distance relay(s) operate(s) during this short time period between loss-of-channel and pilot trip lockout. PULSAR type TCF-10B receiver provides this logic; it provides a 150 ms trip window, then automatic lockout occurs after loss-of-channel. Provision for a second high-speed pilot trip is provided, for the situation when a permanent fault causes a permanent loss-of-channel and the breaker closes onto the fault.

Indication for low signal and loss-of-channel condition will not be provided for this simplified unblocking scheme. (This function would normally be incorporated in the power line carrier equipment.)

The operating concepts of the pilot distance measurement units (PLTP/PLTG) are the same as for the non-pilot zone distance measurement units, and are supervised by the same LOPB, OSB, IM**,** I_{OM}, FDOP, and FDOG, units, as shown in Figure 3-21 (page 67). The pilot phase and/or pilot ground function(s) can be disabled by setting the PLTP and/or PLTG to the OUT position.

The POTT and Simplified Unblocking schemes include the following kinds of logic:

a. Tripping logic (Figure 3-22, page 68).

   (1) For a forward external fault, the local pilot relay (PLTP and/or PLTG) sees the fault, operates and keys. The output from OR-40 will satisfy the first input to AND-30. Assuming that reverse block (TBM) logic does not operate and pilot enable is set, then three out of four inputs of AND-30 are satisfied, but pilot trip should not occur since the remote transmitter still sends a guard (or blocking) frequency signal.

   (2) For an internal fault, the pilot relays at both ends (PLTP and/or PLTG) see the internal fault and operate; in addition, the overcurrent supervision output(s), together with the received trip (or unblocking) frequency signal CR via AND-44 (in Figure 3-23, page 68), satisfy AND-30 (in Figure 3-22, page 68). Pilot trip signal PT will be applied to OR-2 (in Figure 3-5, page 54) from AND-30. High speed pilot trip (HST) would be

obtained. Targets of pilot phase trip (PLTP) and/or pilot ground trip (PLTG) will be turned-on after the breaker trips.

(3) A timer (50/8) and OR 47 are added between RCVR and AND47. This logic is to overcome the fact that the receiver (RCVR) input may drop out momentarily due to the external fault clearing noises.

b. Carrier Keying Logic (Figure 3-23, page 68)

(1) Forward Fault Keying

For a forward internal or external fault, the local pilot relay (PLTP and/or PLTG) sees the fault and picks up, operates OR-40, AND-45, OR-18, and AND-35 if pilot enable is set, and functional display “STYP” is set at POTT position. Output signal from AND-35 will operate the reed relay (CARSND), key the local transmitter, shift the transmitting frequency from guard to trip (or from a blocking to an unblocking), to allow the remote pilot relay system to trip.

(2) Echo Keying

Since the POTT and the Simplified Unblocking schemes require the receiving of a permissive signal from the remote end, for pilot trip, provision should be made for covering the condition when the remote breaker is opened.

When the remote breaker is opened, the inputs of AND34B (Figure 3-23, page 68) will satisfy the NOT FORWARD, NOT REVERSE and 52b=1 conditions. Any carrier RCVR (CR) will produce an output from AND 34B and also a SEND signal from AND 35 via OR-18. This echo keying will be stopped by itself after 150 ms due to the input timer of AND 34B.

(3) Signal Continuation

This logic includes the signal of TRSL, 0/150 ms timer, AND-34A, OR-18, and AND-35. The 0/150 ms signal continuation time is required to keep the local transmitter at the trip frequency (or unblocking) for 150 ms after the local breaker trip signal TRSL is present, in case of sequential trip on the system. This logic will be disabled by the signal via TDT, the 0 / 300 ms timer (AND-34A) on any time delay trip operation. The signal continuation logic will not perform if the trip is caused by CIF trip (AND 49A).

c. Carrier Receiving Logic (Figure 3-23, page 68)

This logic includes OR-15 (not shown) and AND-44. Output “trip” (or unblocking) frequency signal from the carrier receiver operates the logic OR-15 and will produce a carrier trip (CR) signal from AND-44.

d. Channel Indicators (Figure 3-23, page 68)

The memorized SEND indicator will be displayed after the breaker trips and the frequency shifts to trip or unblocking by the transmitter during the fault. The memorized RCVR indicator will be displayed after the breaker trips and a carrier trip signal is received from the receiver.

e. TBM, Transient Block and Unblock Logic

For a loop system or a paralleled line application, power reversal may introduce problems to the pilot relay system especially when a 3-terminal line is involved, since the distance units may have to be set greater than 150% of ZL in order to accommodate the infeed effect from the tapped terminal. They may see the external fault on the parallel line when the third

source is out of service. The transient block and unblock logic (TBM) is used to solve this problem.

There are some other typical cases of the protected line being tripped by a ground directional relay upon clearing of a fault in the adjacent (but not parallel) line. When the adjacent line breaker trips, it interrupts the current in the faulted phase as well as the load current in the unfaulted phases. Dependent on the direction of this load current, and the contact asymmetry of the breaker, there can be a short pulse of load-derived I_0 with possible "tripping direction" polarity, which provides an electrical forward-torque to the ground directional relay. Therefore, it is desired to increase the security and the transient block timer (0/50) logic will be included automatically in the application if STYP=POTT is set. ***For* POTT *application, the Z3FR setting* MUST *be set to "REV" and Z3P, Z3G should be set to 100% of the line impedance.***

f. Channel Simulation

The test function selection provides the capability to simulate the "TK" switch function for keying action via OR-18 and AND-35 without the operation of pilot relay units, and to simulate the RS switch function for receiving of a trip or unblocking frequency signal action without the operation from the remote transmitter.

g. Programmable Reclosing Initiation (Figure 3-19, page 66)

The basic programmable RI application is as described in Section 3.4.14. However, on pilot systems, to activate the RI2 on any 3-pole high-speed trip, the external pilot enables switch should be ON, and the PLT and PTRI should be set to YES. The operation will occur via the logic AND-89, AND-84 and OR-84A (as shown in Figure 3-19, page 66).

3.5.2 Permissive Underreach Transfer Trip (PUTT)

The basic operating concepts of a PUTT scheme are:

1) Pilot relays (PLTP/PLTG) are set to overreach. The pilot channel is a frequency-shift type device, and the transmitter frequency should be different at each terminal; its signal may be passed through metallic wire or microwave.
2) Channel is normally operated with a guard frequency, the channel frequency will be shifted from guard to trip when the Zone 1 reach relay (Z1P/Z1G) operates, and pilot trip is per-

formed when the pilot relay (PLTP and/or PLTG) operates, together with the receiving of a carrier trip signal from the remote end.

PUTT includes the following logic: the functional display (STYP) should be set to PUTT position.

a. Pilot Tripping Logic

The Pilot Tripping Logic for the PUTT scheme is exactly the same as for the POTT scheme (Figures 3-21, 3-22).

b. Carrier Keying Logic

(1) Forward fault keying (Figure 3-24, page 69)

For a forward end zone fault, the PUTT scheme will not key except when the internal fault is within Zone 1. This means that the PUTT scheme keys only on Zone 1 faults. Keying flows via AND-46, OR-18 and AND-35.

(2) Signal continuation (Figure 3-23, page 68)

Same as for POTT scheme.

The TBM logic is not required because the carrier keying units are set underreach.

NOTE: **For open breaker condition, the echo keying will not work due to lack of the "SEND" signal from the remote terminal for an end zone fault. The remote terminal relies on Zone 2 to clear the fault.**

c. Programmable Reclosing Initiation (Figure 3-19, page 66)

Same as for POTT scheme.

d. Carrier Receiving Logic (Figure 3-23, page 68)

Same as for POTT scheme.

e. Channel Indicators (Figure 3-23, page 68)

Same as for POTT scheme.

3.5.3 Directional Comparison Blocking Scheme (BLK)

The basic operating concept of a Directional Comparison Blocking system (BLK) are:

1) Pilot relays (PLTP/PLTG) are set to overreach; the Zone 3 relays (Z3P/Z3G) must be set in the reverse direction to detect the reverse external faults and for carrier start.

2) Pilot channel is an "ON-OFF" type power line carrier. Transmitter frequency at each terminal can be the same. Channel is normally OFF until the carrier start relay senses the fault and starts the transmitter.

3) Pilot trip is performed when the pilot relay(s) operate(s) and a carrier blocking signal is not received.

The BLK system, as shown in Figure 3-25 (page 70) includes the following logic (functional display "STYP" should be set at the BLK position):

a. Tripping Logic (Figure 3-25, page 70)

(1) For a forward internal fault, the local pilot relay (PLTP and/or PLTG) sees the fault; output signal of OR-40 disables and stops the carrier start circuit (the ΔI and ΔV starts the carrier before the distance unit picks up), via OR-16, S.Q. Timer (0/150 ms) and AND-50, to prevent the local transmitter from starting. (The receiver receives the signal from both local and remote transmitters.) At the same time, output of OR-40 will satisfy one input of AND-48 and also starts the channel coordination timer (BLKT), range 0 to 98, in 2 ms steps. (See Segment 5.1.8e (page 111) for BLKT setting.) After the preset time of the channel coordination timer, logic AND-47 will satisfy AND-48, if there is no received carrier signal from either remote or local on internal faults, and if the local transient block circuit (TBM) does not setup. Then AND-48 output will satisfy AND-52 and will produce pilot trip via OR-2 (Figure 3-5, page 54). Pilot trip target would be the same as for POTT.

(2) For a forward external fault, the local pilot relay (PLTP and/or PLTG) sees the fault, and operates in the same manner as for the forward internal faults. However, at the remote terminal, the carriers units ΔI/ΔV/ Z3P(R)/Z3G(R)/RDOG also sees this external fault and turns-on the transmitter via OR-41, AND-51, AND-50, OR-18, and AND-35, sending a blocking signal to the local and remote terminals. The local receiver receives the blocking signal, disables the operation of AND-47; therefore, AND-48 will produce no carrier trip signal for AND-52.

(3) A timer 50/8 and OR47 are added between OR37 and AND47. This logic is to overcome the fact that the receiver (RCVR) input may drop out momentarily due to external fault clearing noises.

b. Carrier Keying Logic

(1) Reverse fault keying (Figure 3-25, page 70)

For a reverse fault, the ΔI and ΔV as well as the local reverse-looking relay Z3P(R)/ Z3G(R) or RDOG sees the fault, operates the CARSND relay and starts the transmitter, sending a blocking signal to the other terminals.

NOTE: The use of ΔI and ΔV for carrier start provides more security to the blocking scheme.

This keying circuit includes logic OR-50A, AND-50, AND-173, OR-41, AND-51, OR-18 and AND-35. The signal of 52b to AND-35A is for disabling the “SEND” circuit when the breaker is open and line side potential is used.

Since the present keying practice on BLK system uses either the contact open (negative or positive removal keying) or contact close (positive keying) approach, a form-C dry contact output for keying is provided in REL300.

(2) Signal continuation and TBM logic

For a reverse fault, both the local carrier start relay(s) and the remote pilot relay(s) see the fault and operate. The local carrier start relay(s) start the carrier and send a blocking signal to block the remote pilot relay from tripping. After the fault is cleared by the external breaker, the remote breaker may have a tendency to trip falsely if the carrier start unit resets faster than the pilot trip unit. The 0/50 ms timer between the OR-41D and AND-51 holds the carrier signal for 50 ms after the carrier start units

have been reset to prevent tripping. This logic also provides transient block and unblock (TBM) effect on power reversal.

The subsequent out-of-step condition (as described in Section 3.4.17.1, page 38), may cause the reverse looking units to fail to operate on external faults, and introduce false pilot tripping at the other end. Enhanced logic has been added to the design as shown in Figure 3-25 (page 70), which includes OR-41C, 32/0 ms timer, AND-41B and OR-41. It utilizes the not FDOP (or FDOG) and LV condition (LV units can be set between 40 and 60 volts) to initiate the TBM circuit; and sends a blocking signal to the remote end. Set OSB to YES for supervising AND-41B when this enhanced logic is required in the application. Set WFEN to YES if this terminal may become a weakfeed condition.

(3) Internal fault preference and squelch

On an internal fault, the ΔI and ΔV signals also starts the transmitter for 65 ms. This operation may block the system from pilot tripping. The output signal from OR-40 to OR-16 to AND-50 and logic OR-16 to AND-120 will provide an internal fault preference feature for solving this problem. The squelch 0/150 ms timer is required for improving the problem if the local breaker tripped faster than the remote breaker on an internal fault. The logic disables the carrier key circuit (SEND) for 150 ms after any high speed tripping, including pilot trip, Zone 1 trip and instantaneous overcurrent trip.

c. Carrier Receiving Logic (Figure 3-25, page 70)

Carrier signal from the receiver output will be directly applied to AND-47 to disable the pilot tripping function.

d. Channel Indication (not shown in Figure 3-25, page 70)

Since the carrier channel turns “ON” for external faults only, the channel indicators (SEND and RCVR) should not be sealed-in.

e. Channel Simulation

Same as for POTT scheme.

f. Programmable Reclosing Initiation (Figure 3-19, page 66)

Same as for POTT scheme.

3.5.4 High Resistance Ground Faults - Pilot Supplement

Pilot ground is more dependable on high resistance faults because it is supplemented with FDOG and IOM (refer to Figure 3-26, page 71).

Supplemental protection is provided on overreaching pilot systems to detect high resistance ground faults. The instantaneous forward directional overcurrent ground function (FDOG) works in conjunction with the pilot ground distance unit. The FDOG directional unit is determined by the setting of DIRU (ZSEQ/NSEQ/DUAL). Refer to Section 3.4.11 for the setting of DIRU. FDOG is supervised by the IOM setting. A coordination timer FDGT (T/0) is provided to allow preference for pilot ground distance (Mho) unit operation. The delay time (T) can be set from 0 to 15 cycles in 1 cycle steps. The FDGT timer must be set at 3 cycles or longer for security reasons.

3.5.5 Power Reversal on POTT

Pilot ground is more secure on POTT/unblocking schemes on some special power system conditions, such as shown in Figure 3-27 (page 71). A ϕϕG fault is on the paralleled line section. Due to the system condition, fault current flows in the protected line would be I1+I2 from A to B, and Io from B to A. The operation of pilot distance relays would be a phase relay at A and a ground relay at B. The result would be erroneous directional comparison of an external fault as an “internal” one. The POTT/unblocking scheme will incorrectly trip out of the protected line.

REL300 POTT/Unblocking pilot ground unit (PLTG/FDOG) is supervised by the reverse-looking ground unit (RDOG). The “Reverse-Block” logic is as shown in Figure 3-32 (page 74). At terminal A, the RDOG disables the PLTG/FDOG trip/key functions via OR-9A, AND-45A AND-45 and AND-30. At terminal B, it will receive no carrier signal for permissive trip. The reverse-block logic also provides the conventional TBM feature to prevent false operation on power reversal. It should be noted that a “Block-the-Block” logic is also included in the circuit, as shown in Figure 3-32 (page 74). The Block-the-Block logic is to prevent the Reverse-Block logic from over-blocking (see the following system condition). If the breaker is unequal-pole closing on a ϕG fault, say pole-A, pole B and C close at a later time (refer to Figure 3-28, page 72). If, due to breaker contact asymmetry, the first breaker contact to close is the one of the faulted-phase, the zero-sequence (or negative sequence) polarizing voltage will initially have a polarity opposite to its fault-derived polarity, the reverse-looking ground unit could pick-up for a short period, issue a blocking order, and maintain it for 50 ms consequently, the correct tripping will be delayed. The Block-the-Block logic would prevent this delaying. The Reverse-Block logic also includes the reverse looking Z3P/Z3G units as shown in Figure 3-32 (page 74).

3.6 3-ZONE DISTANCE PHASE AND GROUND WITH INDEPENDENT PILOT PHASE AND GROUND

There are four impedance units per zone: one phase-to-phase unit and three phase-to-ground units (see also Section 3.3, page 27). The following table shows the role of each distance unit per pilot zone scheme.

Distant Units			
Scheme	Z1P/Z1G	Z3P/Z3G (Reverse)	PLTP/PLTG
POTT/ UNBLOCK PUTT BLOCK	 Start Key ---	Block Pilot Trip --- Start Key	 Key/Trip Trip Trip and Stop Key

NOTE: Beyond pilot logic functions, Z1P/Z1G and Z3P/Z3G perform basic Zone 1 and Zone 3 functions. Z2P/Z2G function is independent. For Pilot system application Z3FR has to be set to REV. Set T3P = T3G = BLK if Zone 3 trip is not used.

3.7 INVERSE TIME DIRECTIONAL OR NON-DIRECTIONAL OVERCURRENT GROUND BACKUP

See Section 3.4.2 (page 30)

3.8 INSTANTANEOUS REVERSE DIRECTIONAL OVERCURRENT GROUND FUNCTION

Similar to FDOG, the instantaneous reverse directional overcurrent ground function (RDOG) supplements the pilot zone logic.

3.8.1 Supplement to Reverse Z3G Trip

In the blocking system, RDOG, supervised by IOS, provides additional ground fault detection (high resistance) beyond what is available by Z3G (reverse looking) for carrier start.

3.8.2 Carrier Ground Start on Blocking Scheme

In the POTT/UNBLOCK systems, RDOG supervises PLTG and prevents keying or tripping on reverse faults.

3.8.3 Weakfeed System Application

For weakfeed applications, an inherent part of the logic requires reverse fault detection; Z3P/ Z3G and RDOG supply this requirement.

3.9 LOSS-OF-POTENTIAL SUPERVISION (LOP)

See Section 3.4.3 (page 30)

3.10 LOSS-OF-CURRENT MONITORING (LOI)

See Section 3.4.4 (page 31)

3.11 OVERCURRENT SUPERVISION

See Section 3.4.5 (page 31)

3.12 INSTANTANEOUS OVERCURRENT TRIP

See Section 3.4.6 (page 32)

3.13 HIGH-SET INSTANTANEOUS DIRECT TRIP, INCLUDING THREE-PHASE AND ONE GROUND OVERCURRENT UNITS FOR SPT/3PT APPLICATION

See Section 3.4.6 (page 32)

3.14 CLOSE-INTO-FAULT TRIP AND STUB BUS PROTECTION

See Section 3.4.7 (page 32)

3.15 UNEQUAL-POLE CLOSING LOAD PICKUP LOGIC

See Section 3.4.8 (page 33)

3.16 SELECTABLE LOSS-OF-LOAD ACCELERATED TRIP LOGIC (LLT)

See Section 3.4.9 (page 34)

3.17 CURRENT CHANGE FAULT DETECTOR

See Section 3.4.10 (page 34)

3.18 VOLTAGE CHANGE FAULT DETECTOR

See Section 3.4.10 (page 34)

3.19 3-TERMINAL LINE APPLICATION

For a 3-terminal BLK application, since the frequency of the three transmitters are the same, any one transmitter starting will block the pilot system from tripping, therefore, logic for the 3-terminal BLK pilot system would be the same as that used for the 2-terminal BLK system. However, for POTT/PUTT/UBLK systems, since the transmitter frequency is different at each terminal, logic for the second receiver (RCVR-2) should be added to the system when the application involves 3-terminals. Functional display “3TRM” should be set at “YES” position when the 3-terminal line is applied.

a. Additional Logic For POTT and Simplified Unblocking (Figure 3-29, page 72)

   This logic includes contact converters (CC) for RCVR-2, AND-55, and logic for the second receive indication. The second receiver output operates the contact converter (or voltage). Output of AND-55 provides carrier trip signal (CR) to satisfy AND-30 via AND-64 and allows pilot tripping.

b. Additional Logic for PUTT (Figure 3-30, page 73)

   The additional logic for this scheme would be similar to that as described for POTT scheme, except logic includes AND-56, AND-57 and 50/ms timer. This is because only the Zone 1 reach relay keys the transmitter on internal faults. For a close-in Zone 1 fault, only the local terminal can key its transmitter and the other two cannot. This logic provides a CR pilot trip signal for 50 ms for system security. For a fault which can be detected by relays at two terminals, AND-55 logic can be satisfied, then pilot trip will be performed via the logic in the usual way.

3.20 WEAKFEED TRIP APPLICATION

a. Block/Weakfeed

   The logic for a weakfeed terminal is not required for the BLK system because the BLK system requires no permissive trip signal from the remote end, even though the remote end is a weakfeed terminal. The strong end has no problem tripping for an internal fault. The weak end is usually assumed either as a “no feed” source, for which it does not need to trip on an internal fault, or it can pilot trip sequentially.

NOTE: **Refer to Figure 3-25 (page 70), logic AND-41B and OR-41C, WFEN should be set to YES if OSB is set to YES and this terminal may become a weak condition.**

For the bench test, at the conditions of V = 0 and I = 0, the carrier keying contacts will be closed for the settings of OSB = YES and WFEN = NO. In an actual system, 52b will

be applied to OR41C, because of V = 0 and I = 0, and the carrier keying signal will not be sent.

b. PUTT/Weakfeed

The logic for a weakfeed terminal is not required for the PUTT system. Because the PUTT system uses underreaching relay(s) only for pilot trip keying, it is impossible to apply this scheme to protect a system which may have weakfeed condition.

c. POTT/ Weakfeed

For POTT and unblocking schemes, at the weak source terminal, the Z3P/Z3G distance relays should be set for reverse-looking, and the undervoltage units (LVA, LVB, LVC) should be used. The basic operating principle of the weakfeed trip logic for the POTT and simplified unblocking scheme is as follows:

(1) Echo key for trip permission (Figure 3-31, page 74)

On internal faults, the strong source end sends the trip (or unblocking) frequency signal to the weak end, and its pilot trip relay(s) will trip, once it receives echo trip permission from the weak end. The pilot trip relay(s) at the weak end cannot pick up due to not enough internal fault energy, and does not perform the normal keying function. With one weakfeed condition, when the weak end receives a trip or unblocking signal, the output from the receiver operates the echo key logic AND-65, providing both pilot relay (from OR-40) and reverse-looking relay (from OR-41A) do not pick-up, and if system disturbance is detected (ΔV or ΔI). Output of AND-65 will key the weak terminal transmitter to the trip or unblocking frequency via OR-18, AND-35. On weak end reverse external fault, the strong source end sends the trip (or unblocking) frequency signal to the weak end, and its pilot trip relay(s) is waiting to receive the echo trip permission from the weak end. However, at the weak end, the echo key logic AND-65 will not operate, because of the reverse looking relay operation, it sends no echo signal to the strong end. Both the strong/weak ends will not trip on this external fault.

(2) Weak end trip on internal fault (Figure 3-31, page 74)

The output of AND-65 (start echo keying) together with no output from OR-40 (pilot trip relays), and with output from OR-44 (low voltage condition) will satisfy AND-66; weakfeed trip will be performed after 50 ms via OR-2. The timer delay is for coordination because the voltage trip units are non-directional.

3.21 LOGIC FOR RB ON BF SQUELCH (Setting BFRB)

For a pilot system, the BFI signal can be used to stop (for a blocking system) or start (for permissive schemes) the carrier channel to allow far end line terminals to trip in the event a breaker close to an external fault fails to open. The problem is how to inhibit reclosing on those terminals, to limit damage.

REL300 solves this problem at the far end terminals by the Reclose Block on Breaker Failure Squelch logic in the RI/RB software. When the breaker fails to trip, the BFI logic squelches the channel to continuous permissive signal, or stops the blocking signal. This is done after some time delay. The relay at the far end, having sensed the external fault in the forward direction, sees the permissive signal (or stoppage of blocking signal) much later than it would for a normal pilot trip operation initiated by relay forward-looking elements at the end closer to the fault. This

time delay is used to differentiate between a faster normal pilot trip and the slower problem-related pilot trip initiated by BFI, and to block reclosing in the latter case.

This logic is shown in Figure 3-19 (page 66), which includes AND-61A and a 132/0 ms timer. The logic at the far end terminal will initiate RB (and inhibit RI) at 132 ms (about eight cycles) after the fault is detected by the overreaching PLTP or PLTG element, if the pilot is enabled and the TRSL signal is received on any three-pole trip operation. If the fault is cleared before the 132 ms expiration of the timer, normal reclosing will occur.

3.22 OUT-OF-STEP (OS) LOGIC

Refer to Section 3.4.17 (page 37)

3.23 OPTIONAL SINGLE-POLE TRIP (SPT) LOGIC AND OUTPUTS

Refer to Section 3.4.18 (page 38)

3.24 OPTIONAL PROGRAMMABLE OUTPUT CONTACTS WITHOUT SPT OPTION

The optional programmable output contact module consists of 8 relays, 4 with heavy duty NO contacts (OC1 to OC4) and 4 with standard contacts (OC5 to OC8) with jumper selection for NO or NC outputs. Contacts OC4 and OC8 provide timers for delay pickup and/or delay drop-out. The ranges of timers are 0 to 5 seconds in 0.01 second steps with an error of ± 1 cycle. Every Contact (OC1 to OC8) can be programmed independently based on one or all of the 30 pre-assigned signals with AND/OR/NOT logic combination. These 30 signals are listed in Table 3-4 (page 78) and Figure 3-33 (page 75). All 8 output settings can only be performed through remote WRELCOM® communication.

In addition to the foregoing features and options, the REL300 Pilot Zone system includes many of the same special functions as the Non-Pilot system, i.e.:

- RS-232C port (See Sections 4.3, page 80, and 4.7, page 87).
- Line voltage, current and phase angle monitor (See Section 4.4.2, page 83).
- Reclosing initiation and reclose block outputs. Refer to Section 5.3 for RI Guidance, except set the relay to PLT = YES and apply a rated voltage to PLT/ENABL terminals TB5/9(+) and TB5/10(-).
- Fault Locator function, and current change fault detector (See Section 1.5, page 4).
- Self-check function (See Section 1.6, page 6, and 4.5.4, page 84).

3.25 BREAKER FAILURE CONTACT OUTPUTS

The contacts BFI-A1 and BFI-A2 are similar to the trip contacts as shown in Figure 3-5 (page 54) except the contact rating and the operating speed. Due to the special speed-up circuit built in for the trip relays, the BFI-A1 and FBI-A2 contacts are 10 milliseconds slower than the Trip-A1 and Trip-A2 contacts.

3.26 REL300 ORDERING INFORMATION

The REL300 equipment is identified by the Catalog Number on the REL300 nameplate which can be decoded by using Table 3-1(page 76).

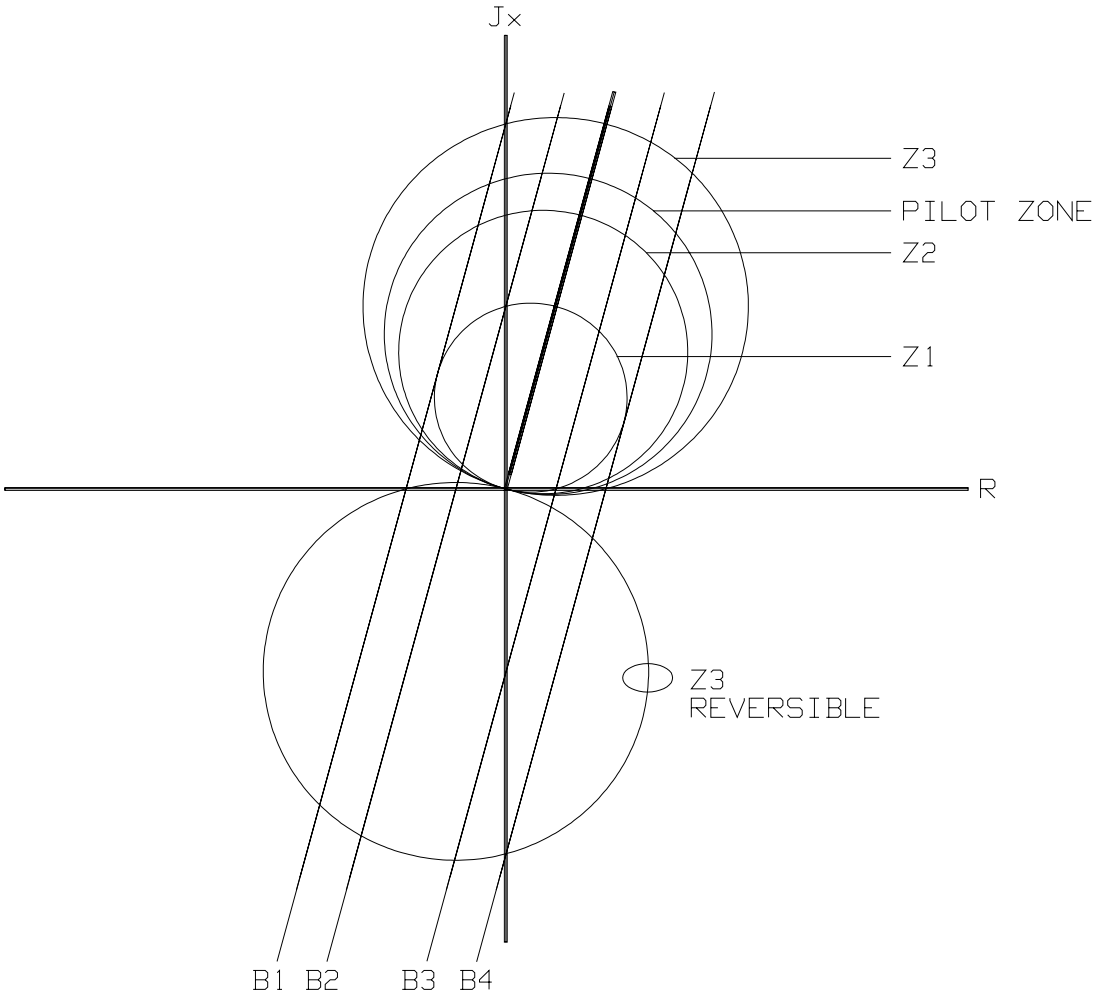

Sub 3
9651A57

Figure 3-1: REL300 Characteristics/R-X Diagram

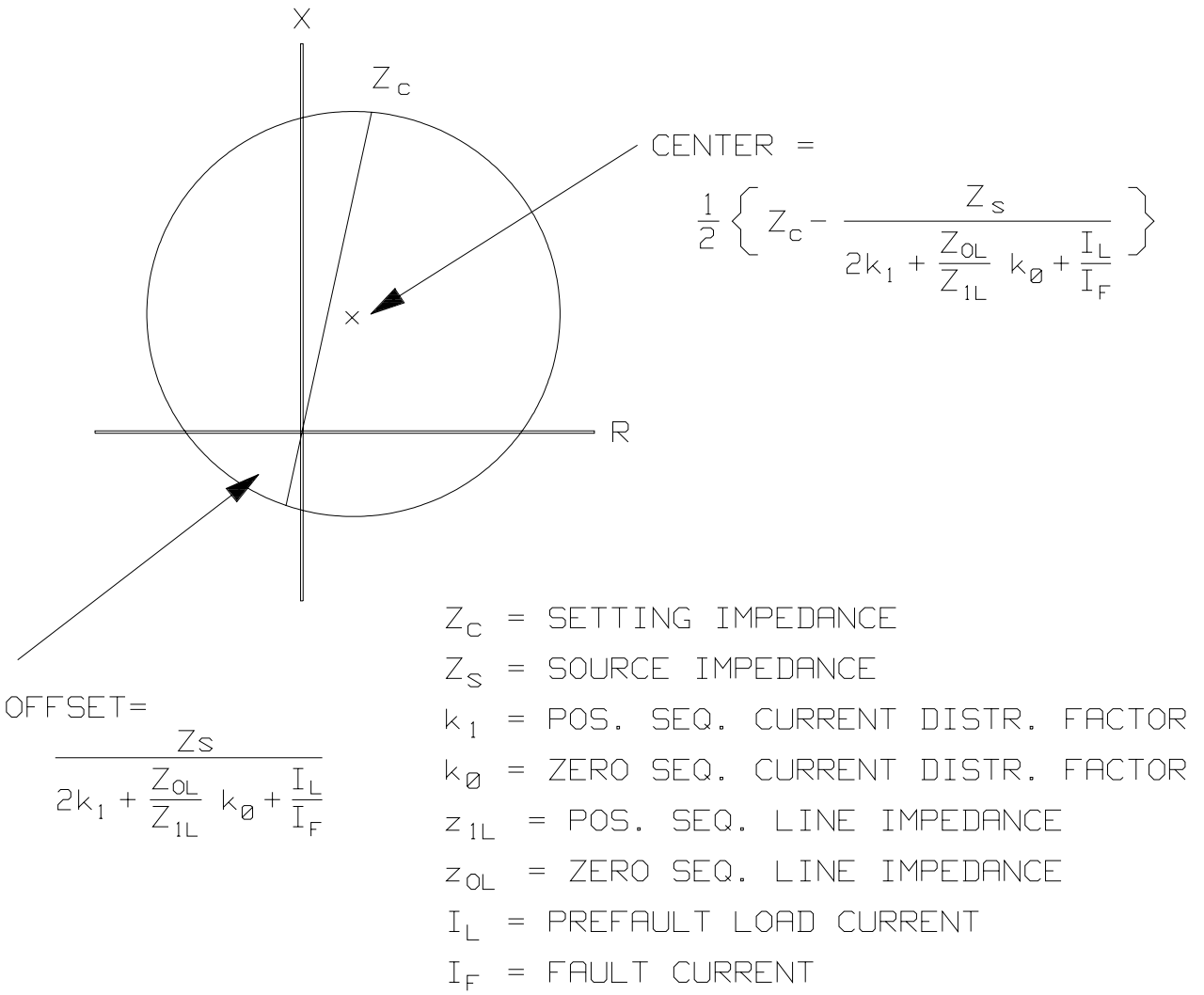

Figure 3-2: Mho Characteristic for Phase-to-Ground Faults

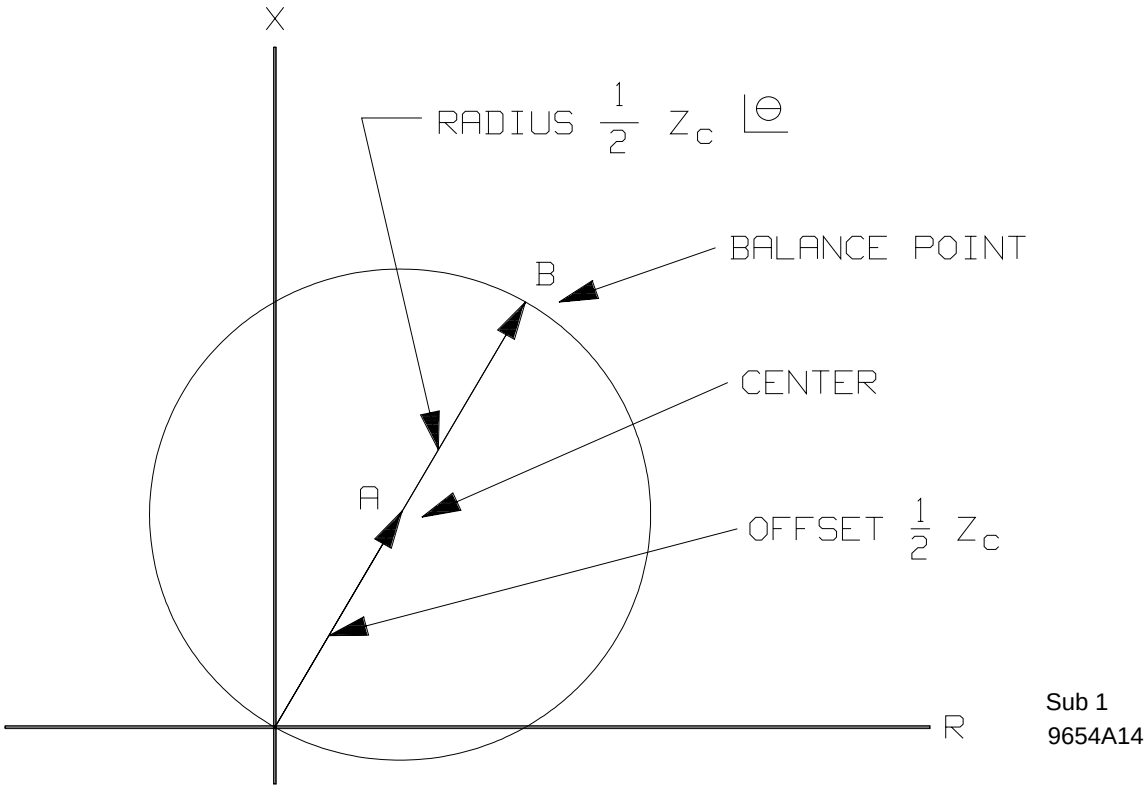

Figure 3-3: Mho Characteristics for Three-Phase Faults (No Load Flow)

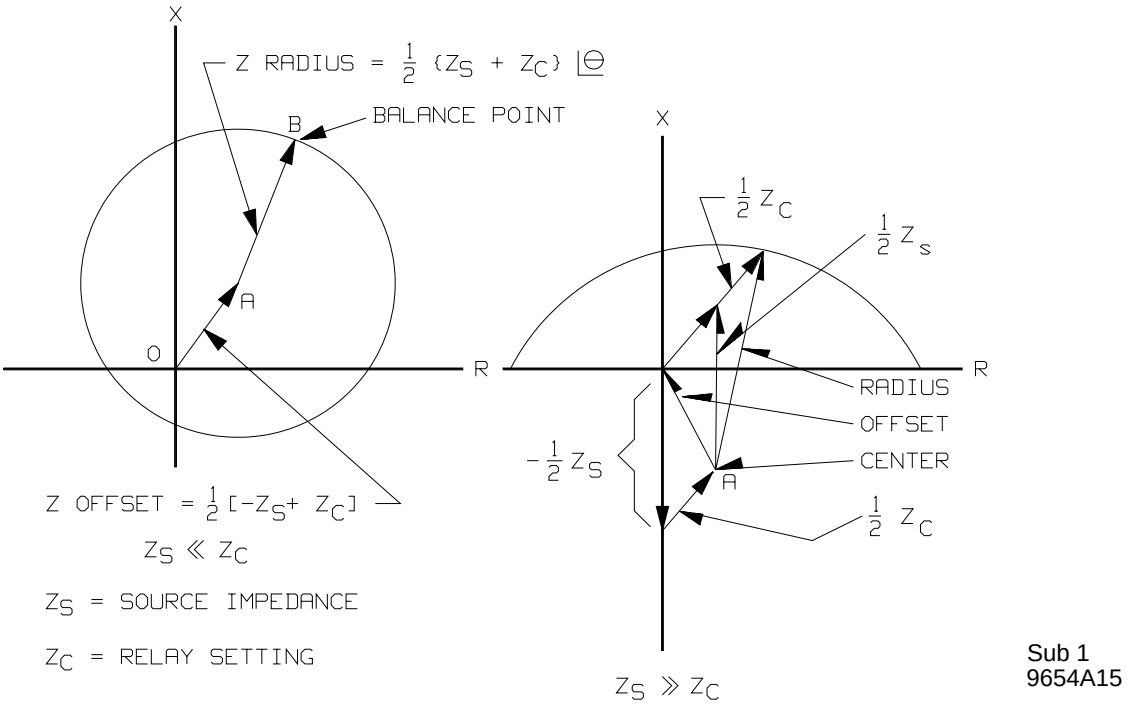

Figure 3-4: Mho Characteristics for Phase-to-Phase and Two Phase-to-Ground Faults (No Load Flow)

Sub 2
9661A16

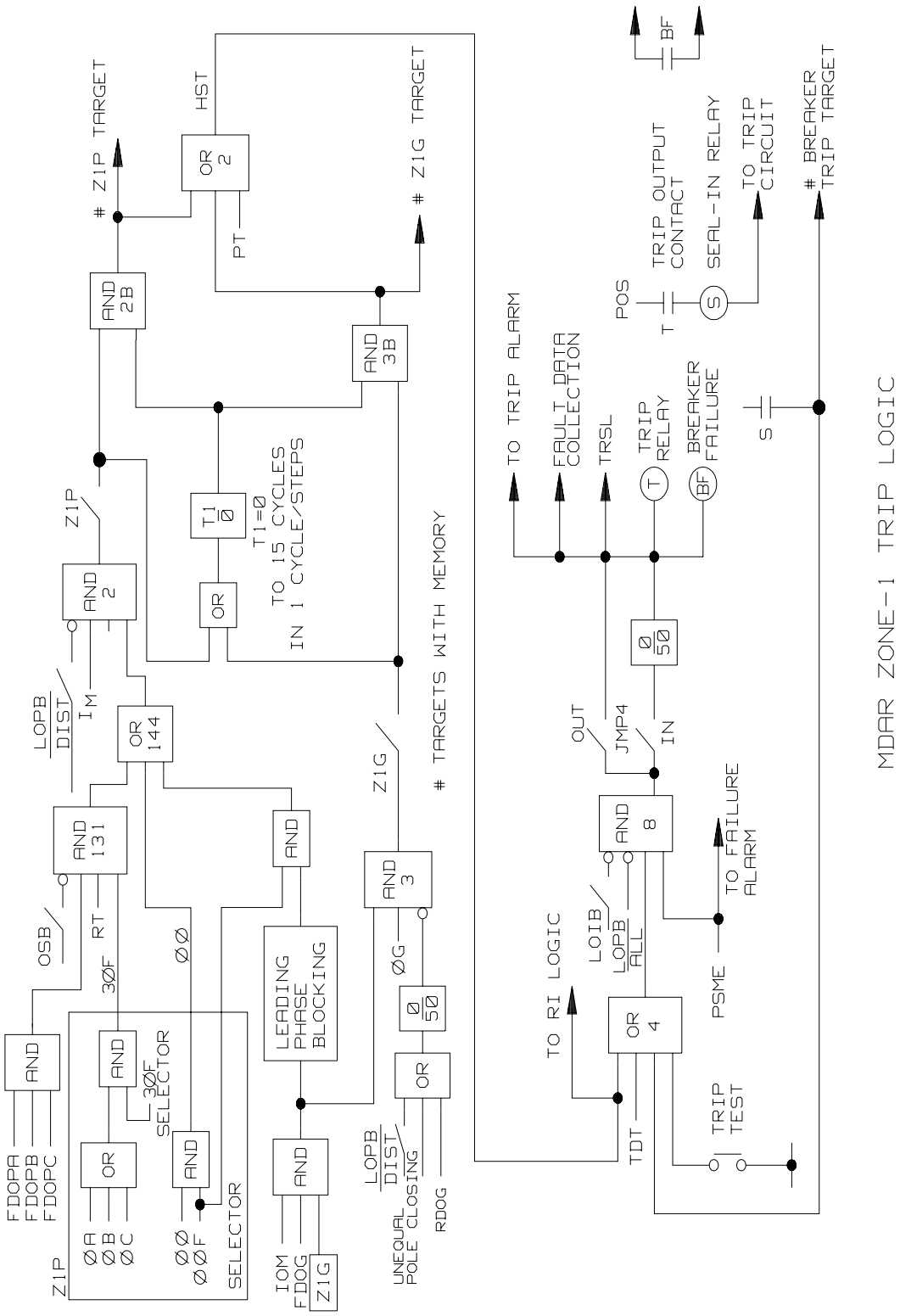

Figure 3-5: REL300 Zone 1 Trip Logic

*Denotes Change

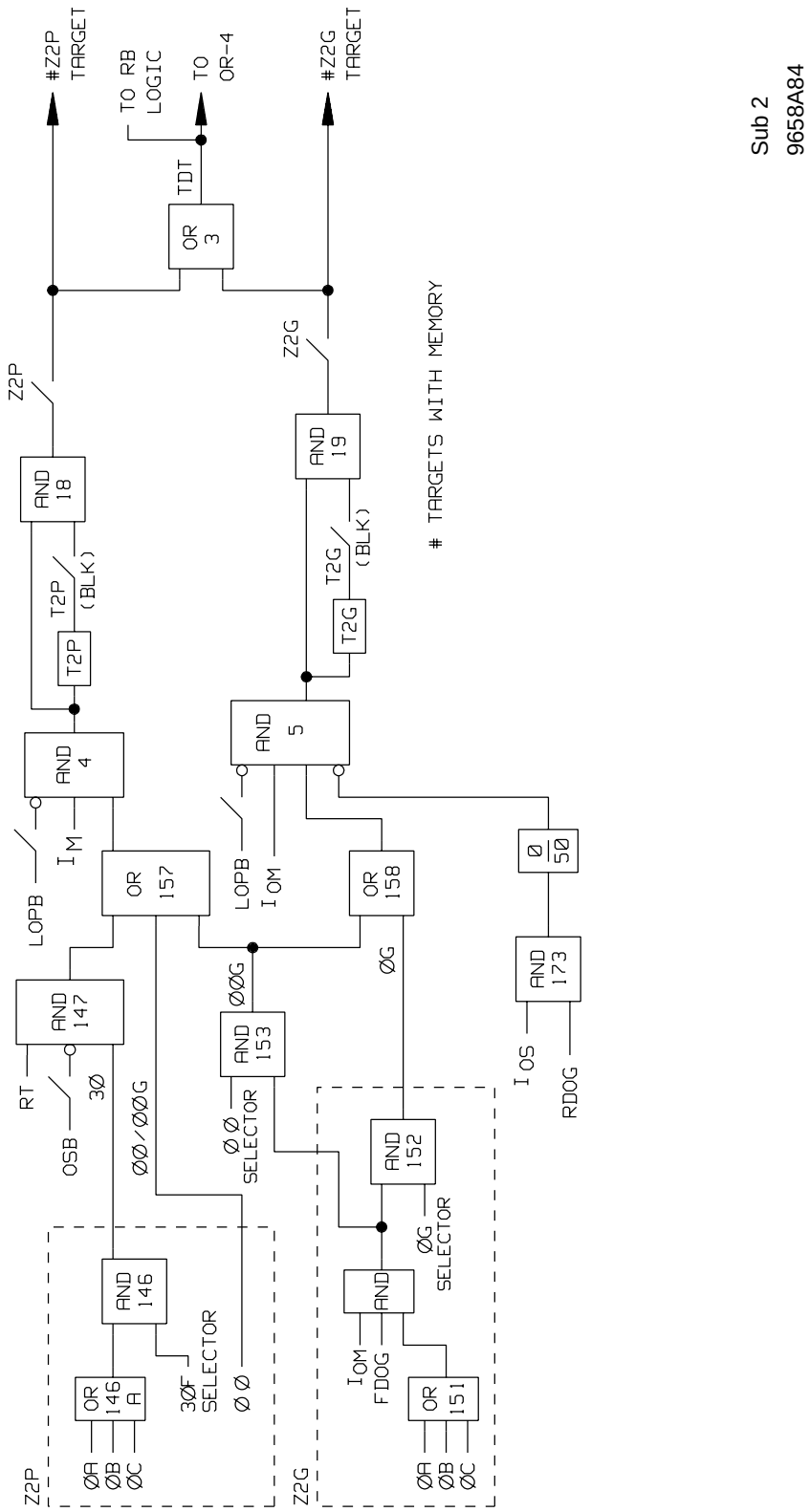

Sub 2
9658A84

Figure 3-6: REL300 Zone 2 Trip Logic

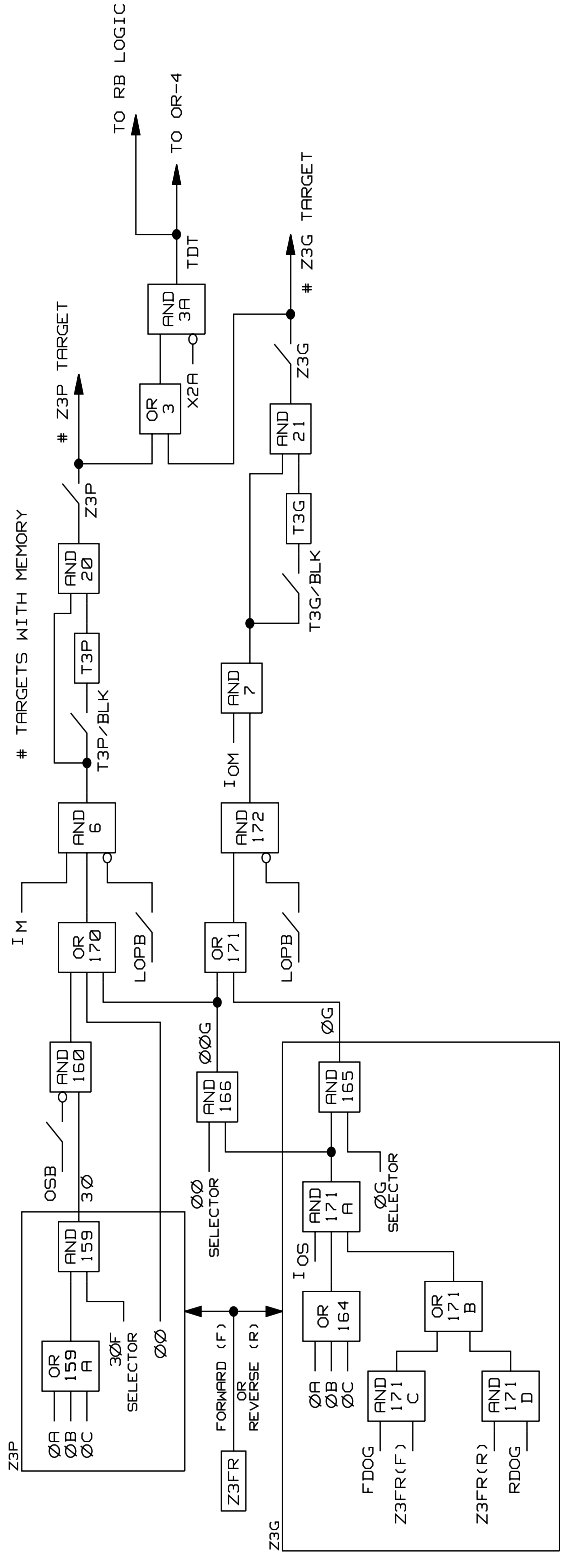

Figure 3-7: REL300 Zone 3 Trip Logic

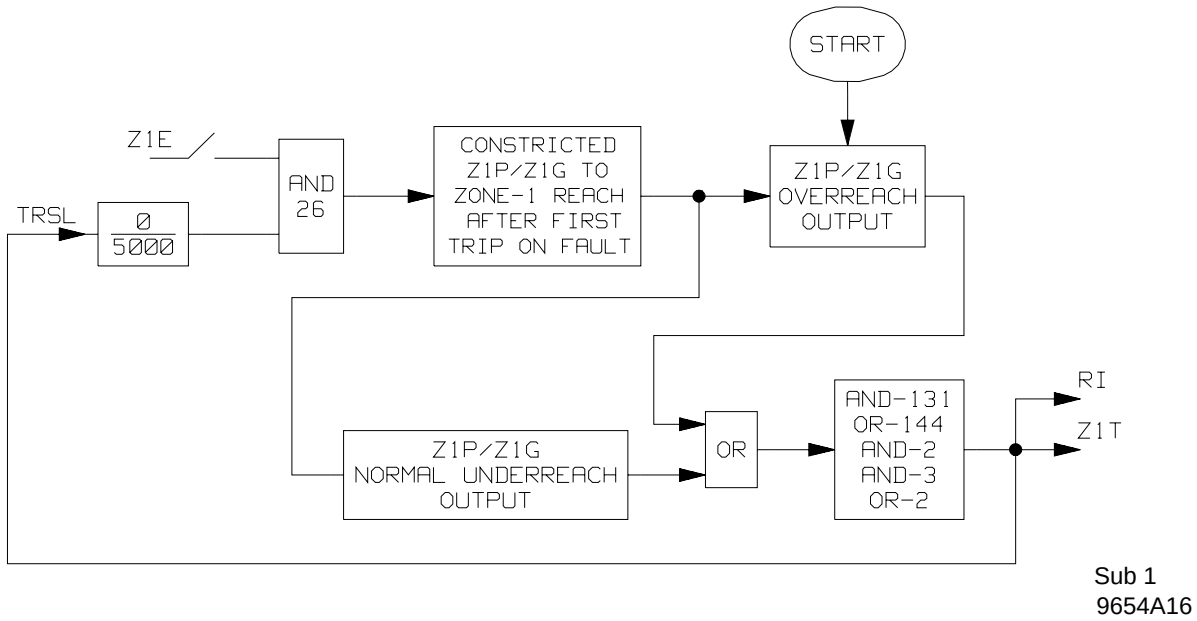

Figure 3-8: REL300 Zone 1 Extension Scheme

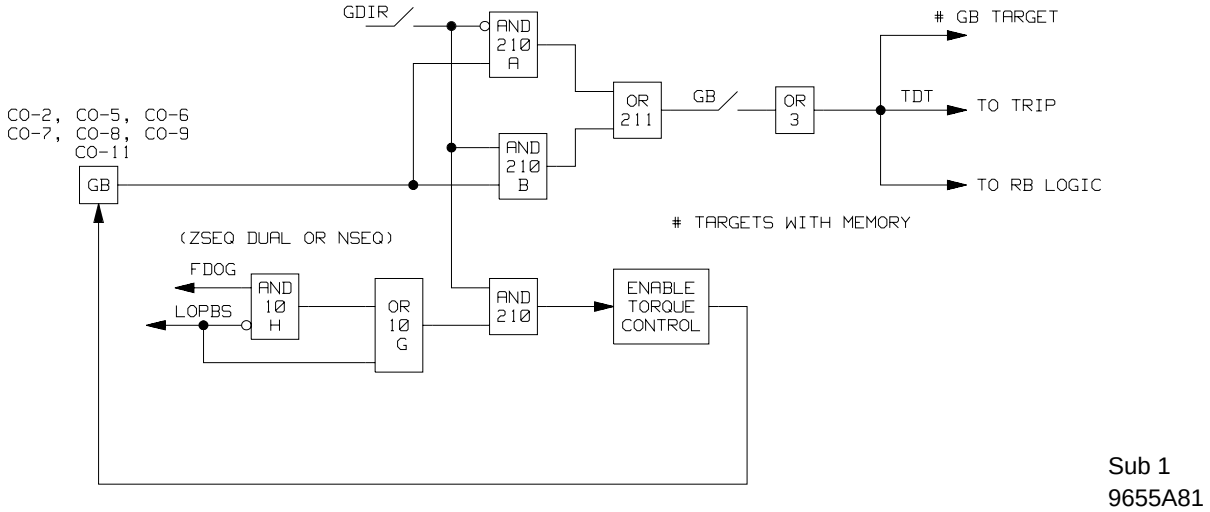

Figure 3-9: Inverse Time Overcurrent Ground Backup Logic

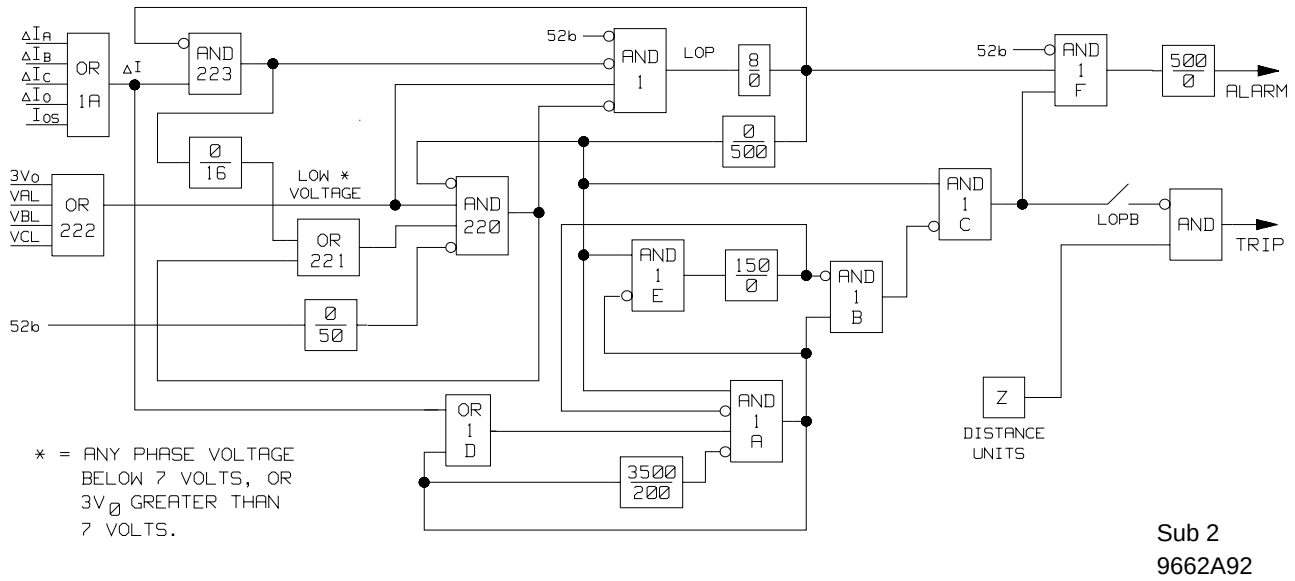

Figure 3-10a: Loss-of-Potential Logic (Version 2.23)

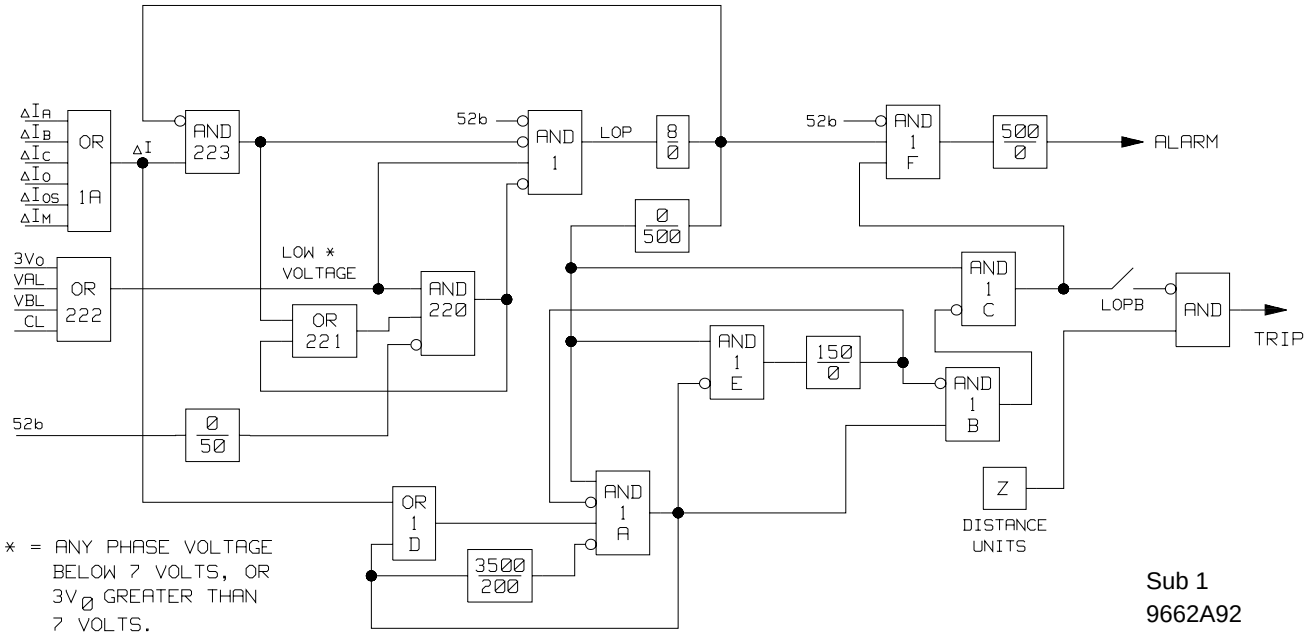

Figure 3-10b: Loss-of-Potential Logic (Version 2.22)

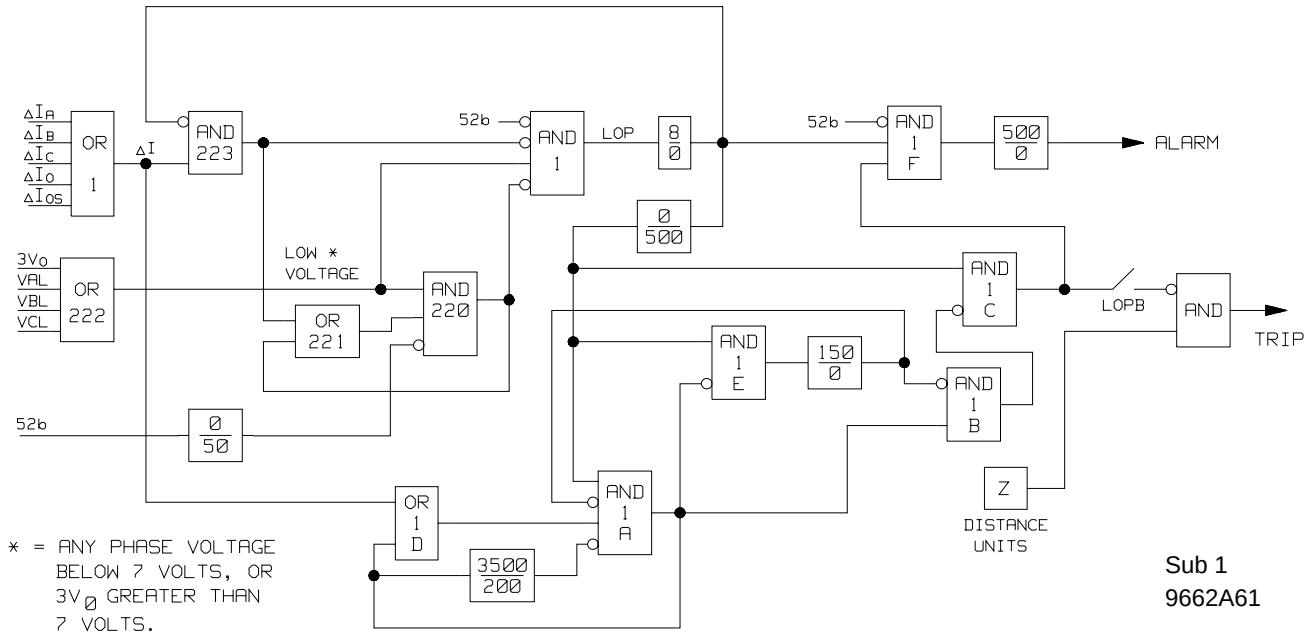

Figure 3-10c: Loss-of-Potential Logic (Version 2.21)

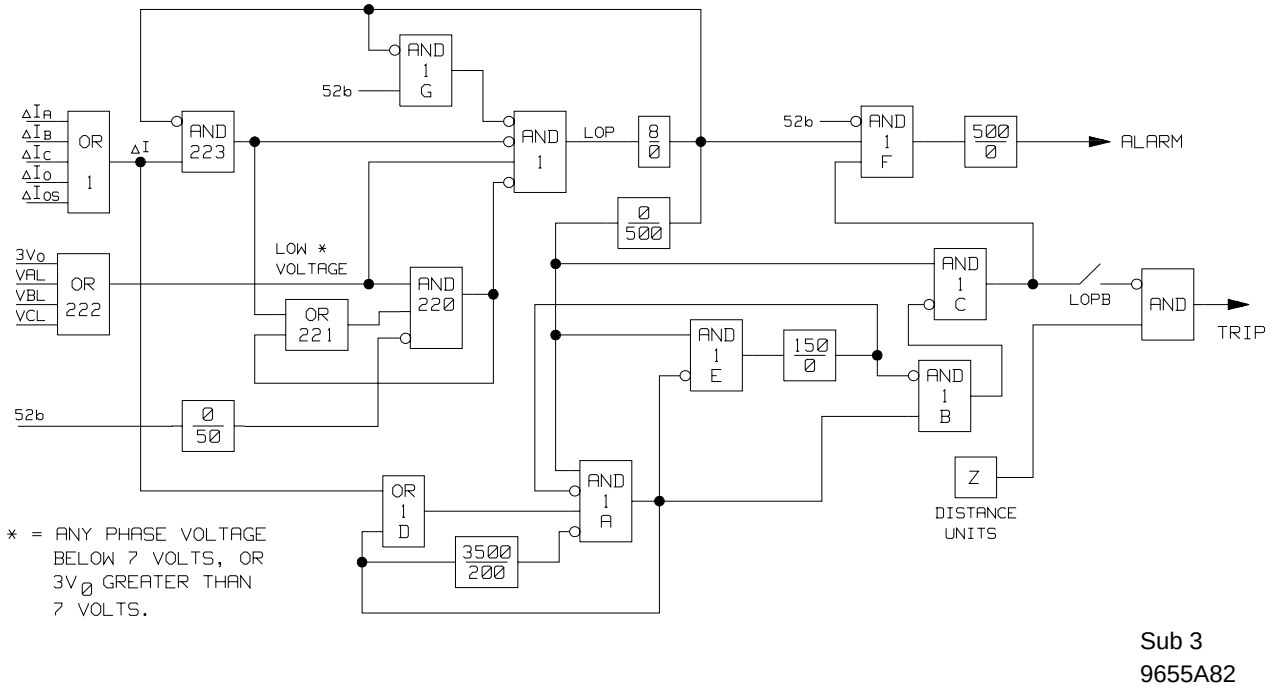

Figure 3-10d: Loss-of-Potential Logic (Version 2.20)

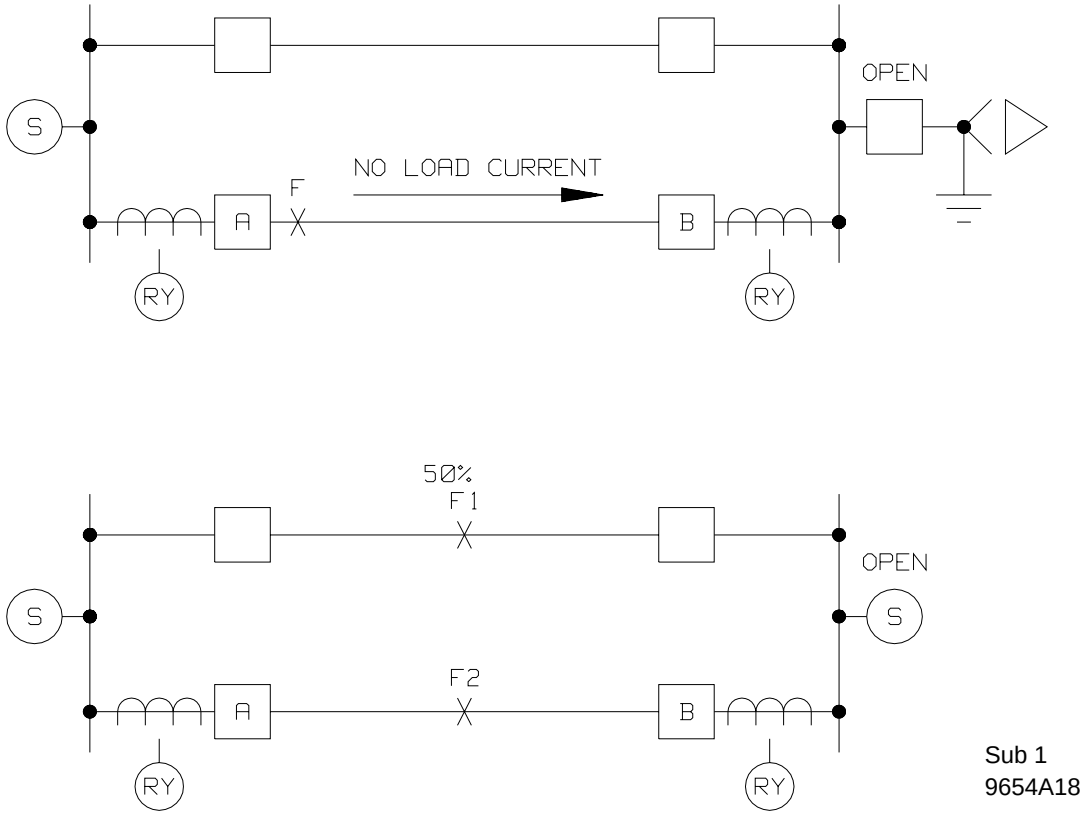

Figure 3-11: Loss of Potential Logic (System Diagram)

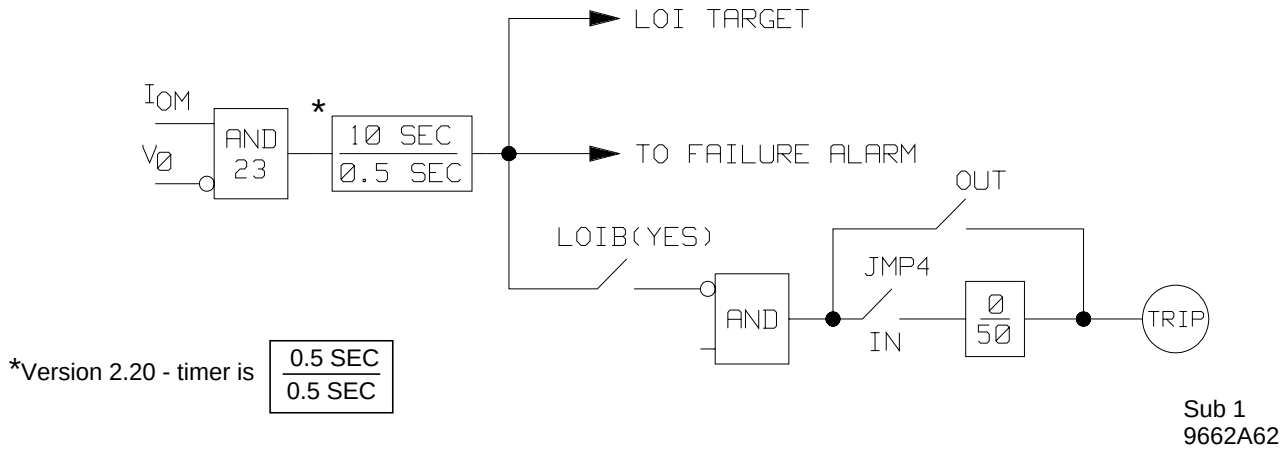

Figure 3-12: AC Current Monitoring Logic

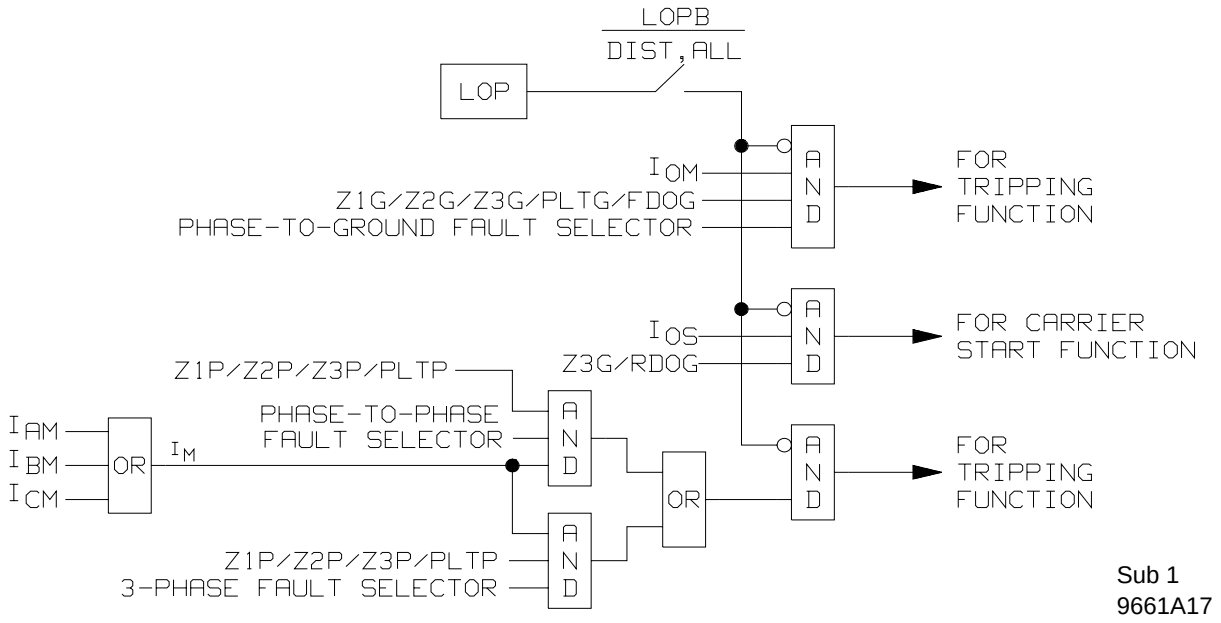

Figure 3-13: Overcurrent Supervision

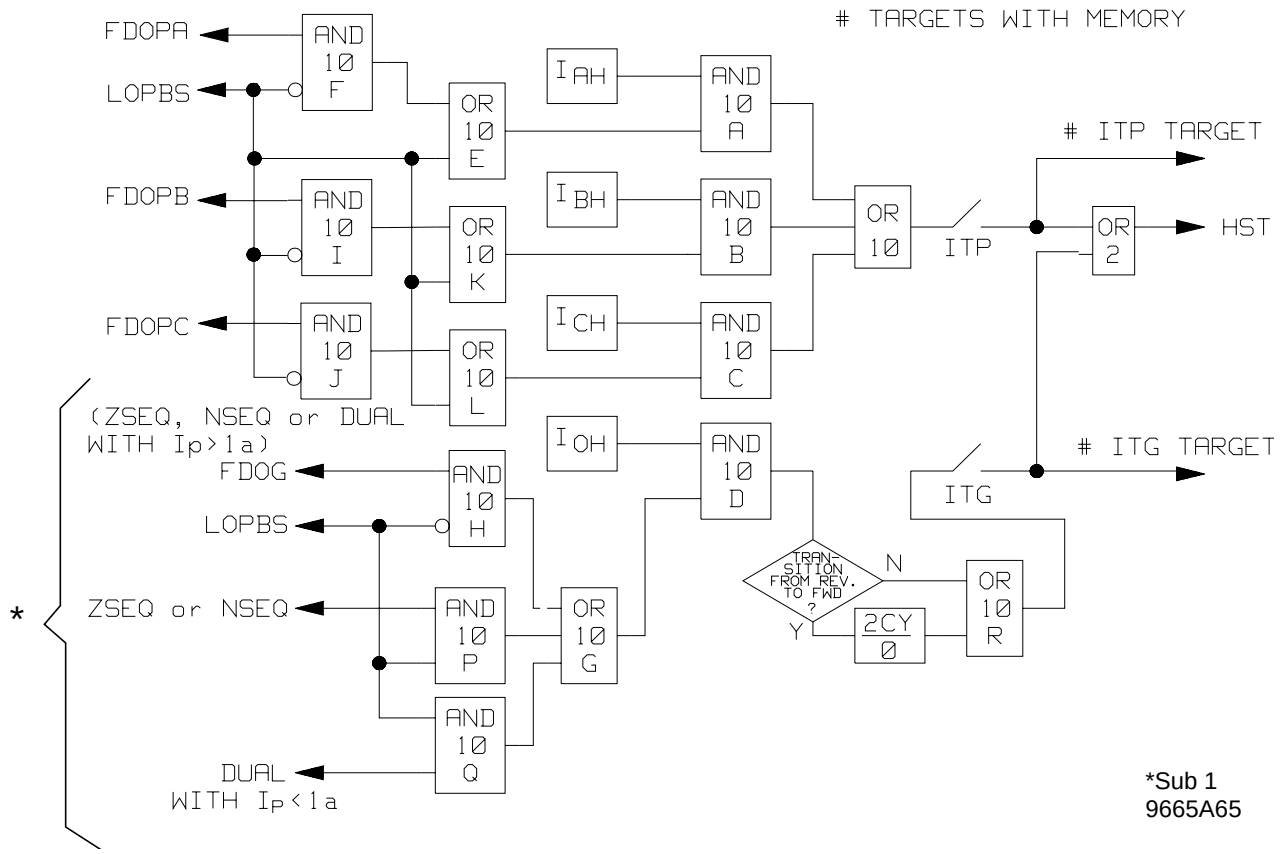

Figure 3-14: Instantaneous Overcurrent Highset Trip Logic

* Only in Version 2.23 and higher

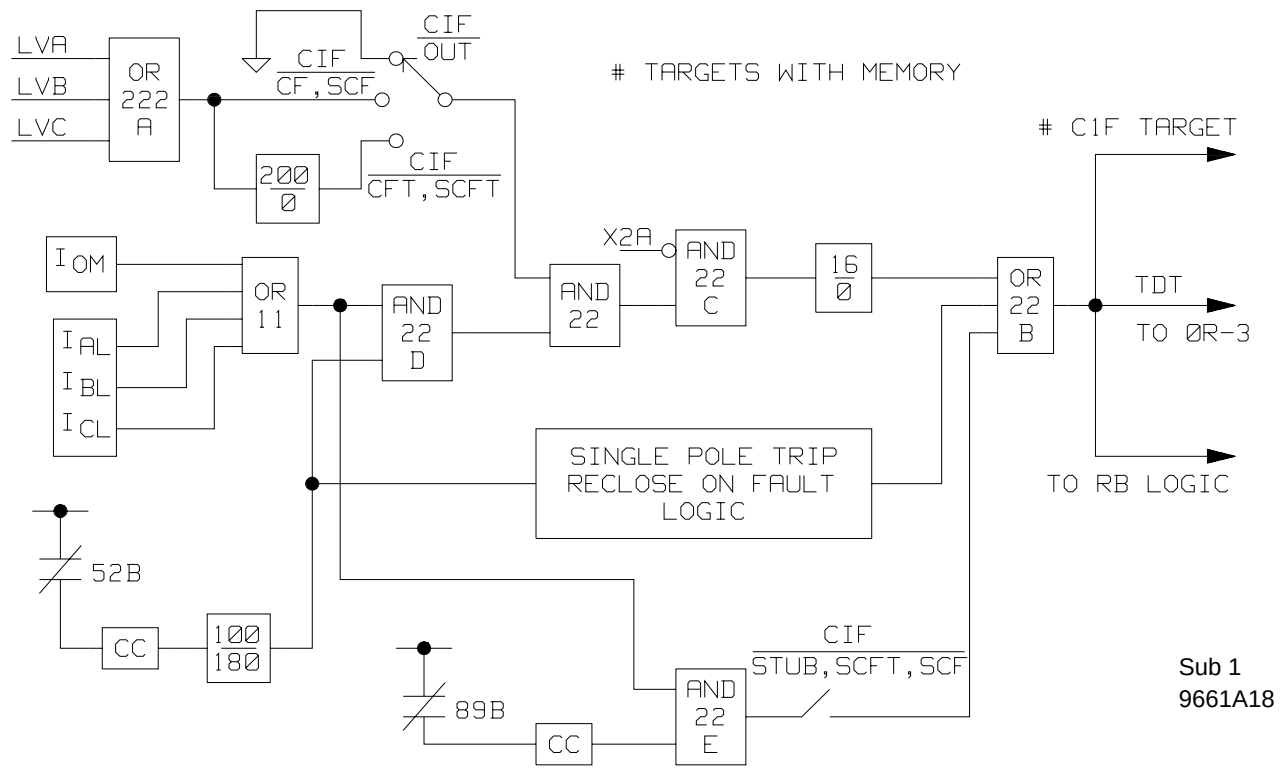

Figure 3-15a: REL300 Close-Into-Fault Trip (CIFT) and Stub Bus Protection Logic

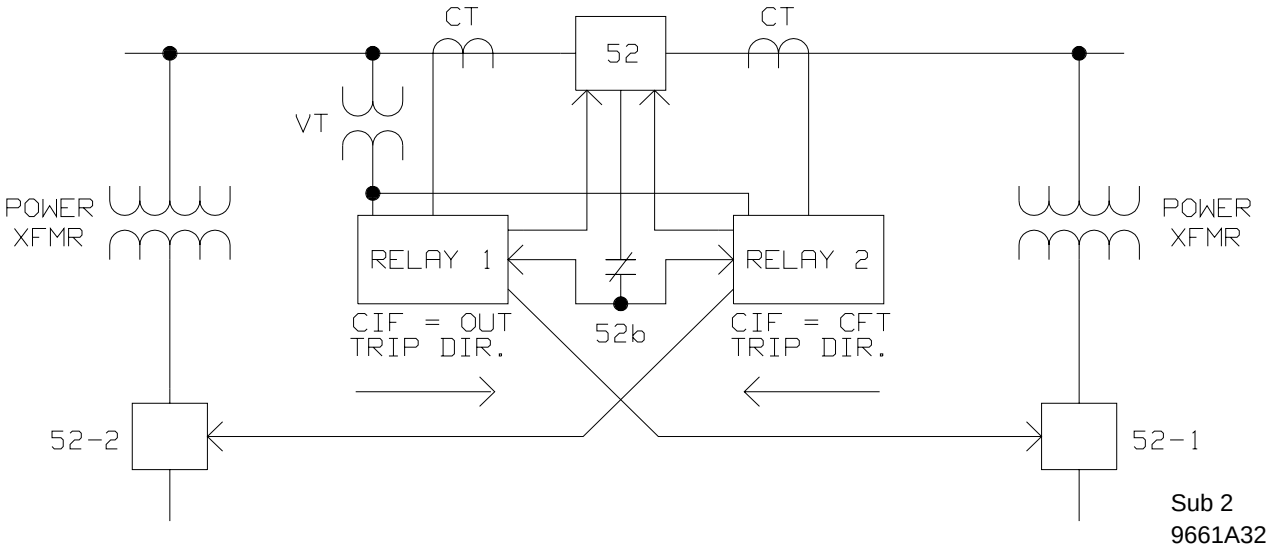

Figure 3-15b: Special Application for CIF Logic with LV Time Delay Pickup

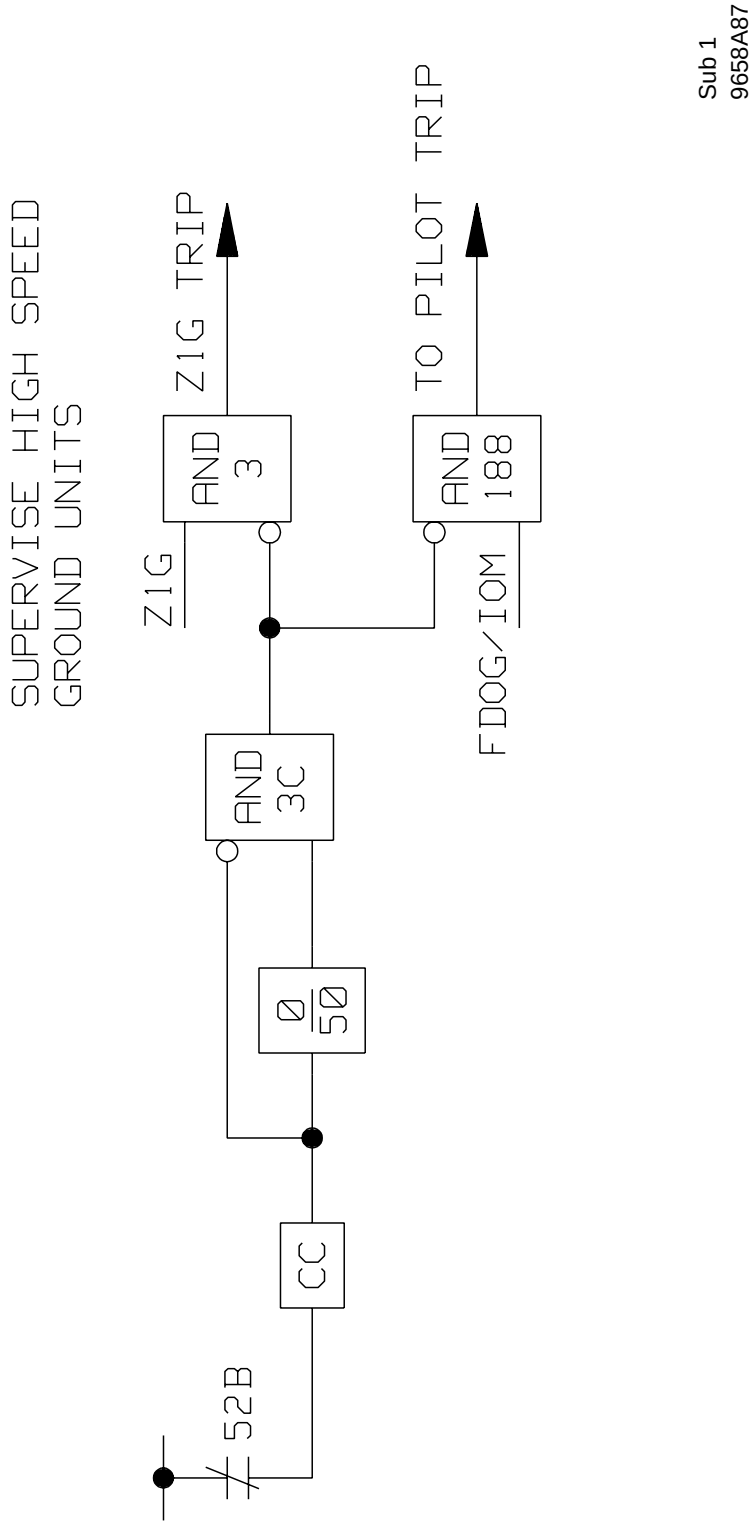

Figure 3-16: REL300 Unequal-Pole-Closing Load Pickup Trip Logic

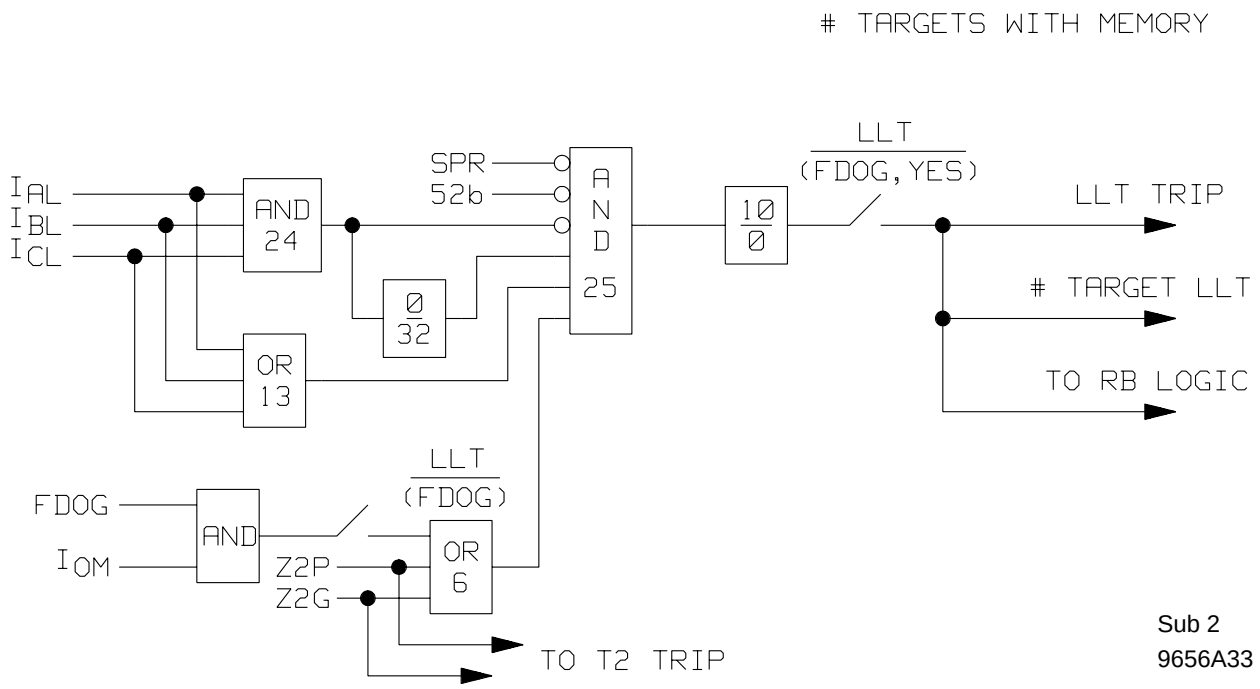

Figure 3-17: Load Loss Accelerated Trip Logic

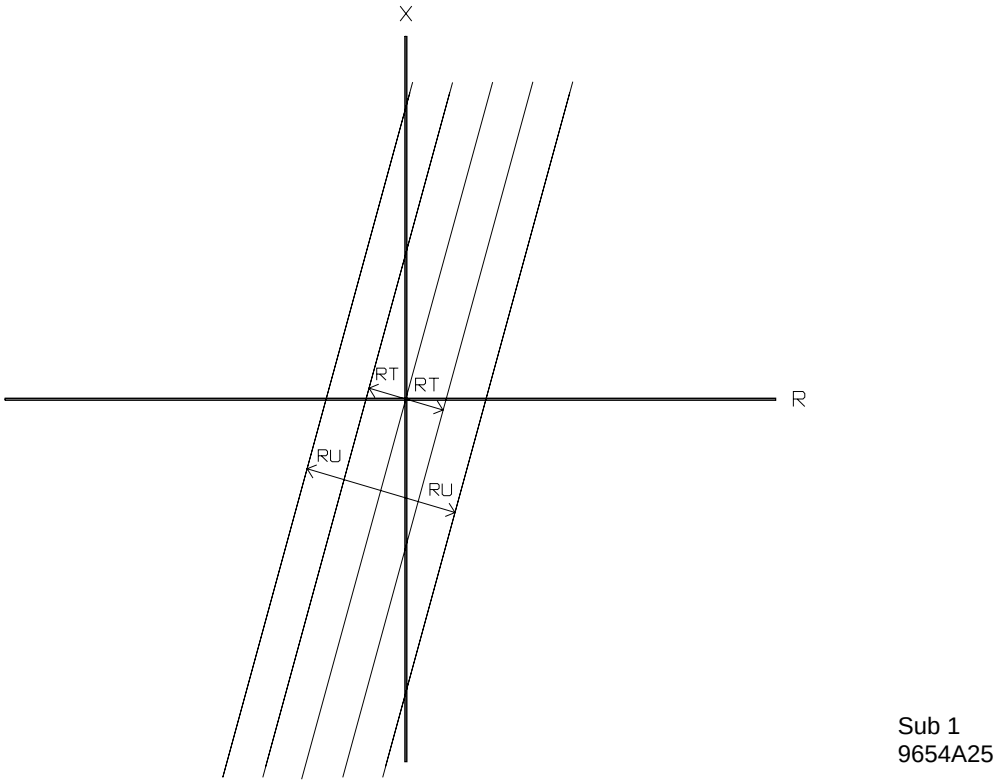

Figure 3-18a: Out-of-Step Block Logic (Blinder Characteristics)

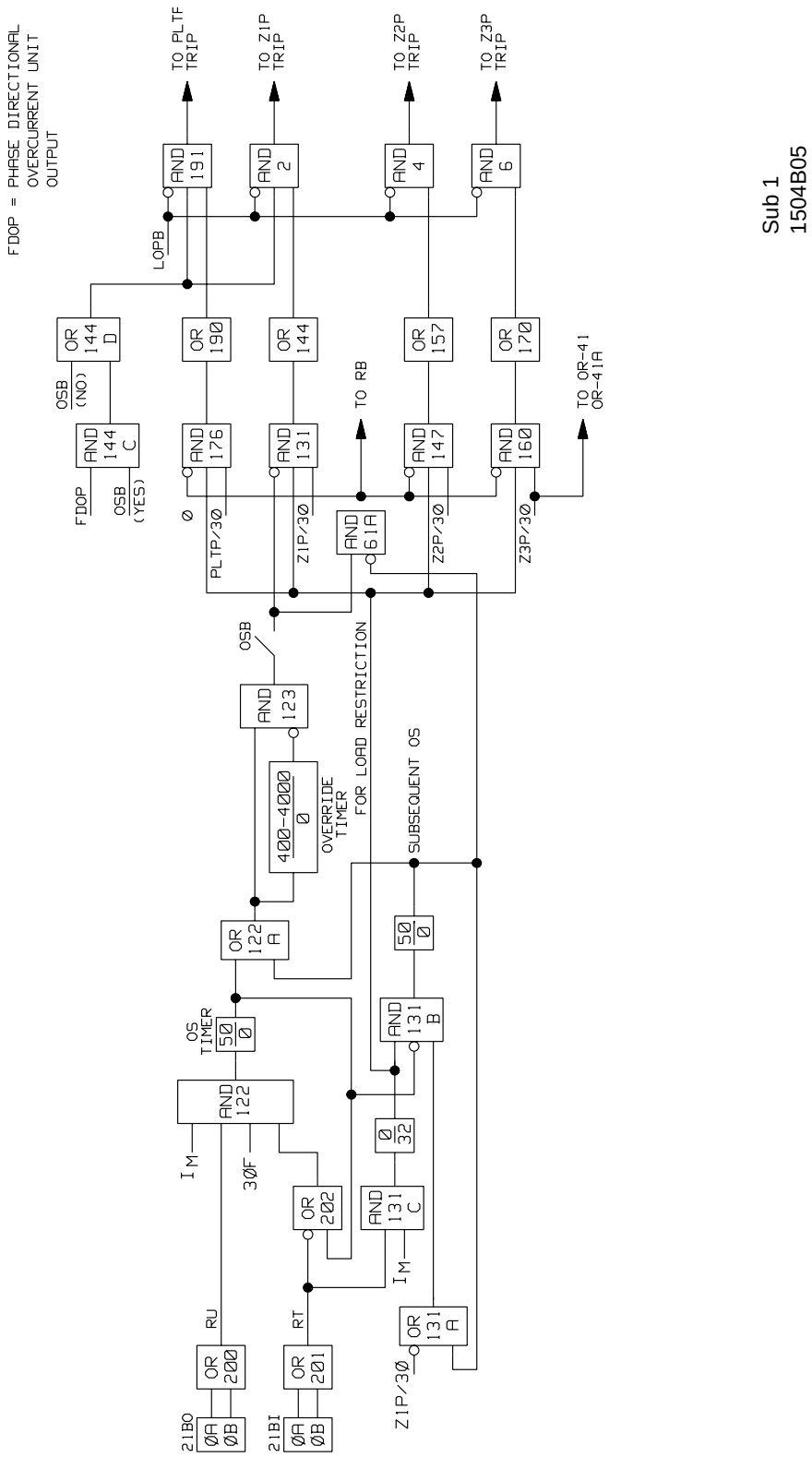

Sub 1
1504B05

Figure 3-18b: Out-of-Step Block Logic

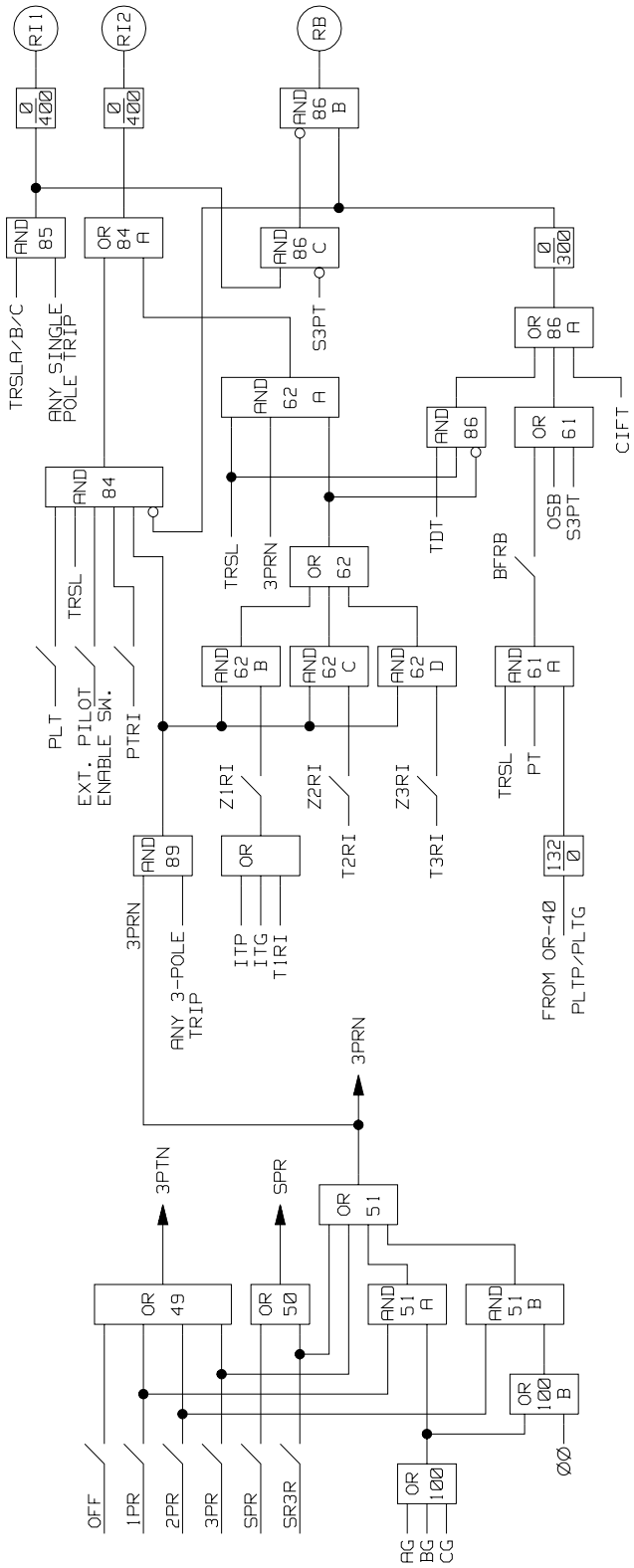

Figure 3-19: Reclosing Initiation Logic

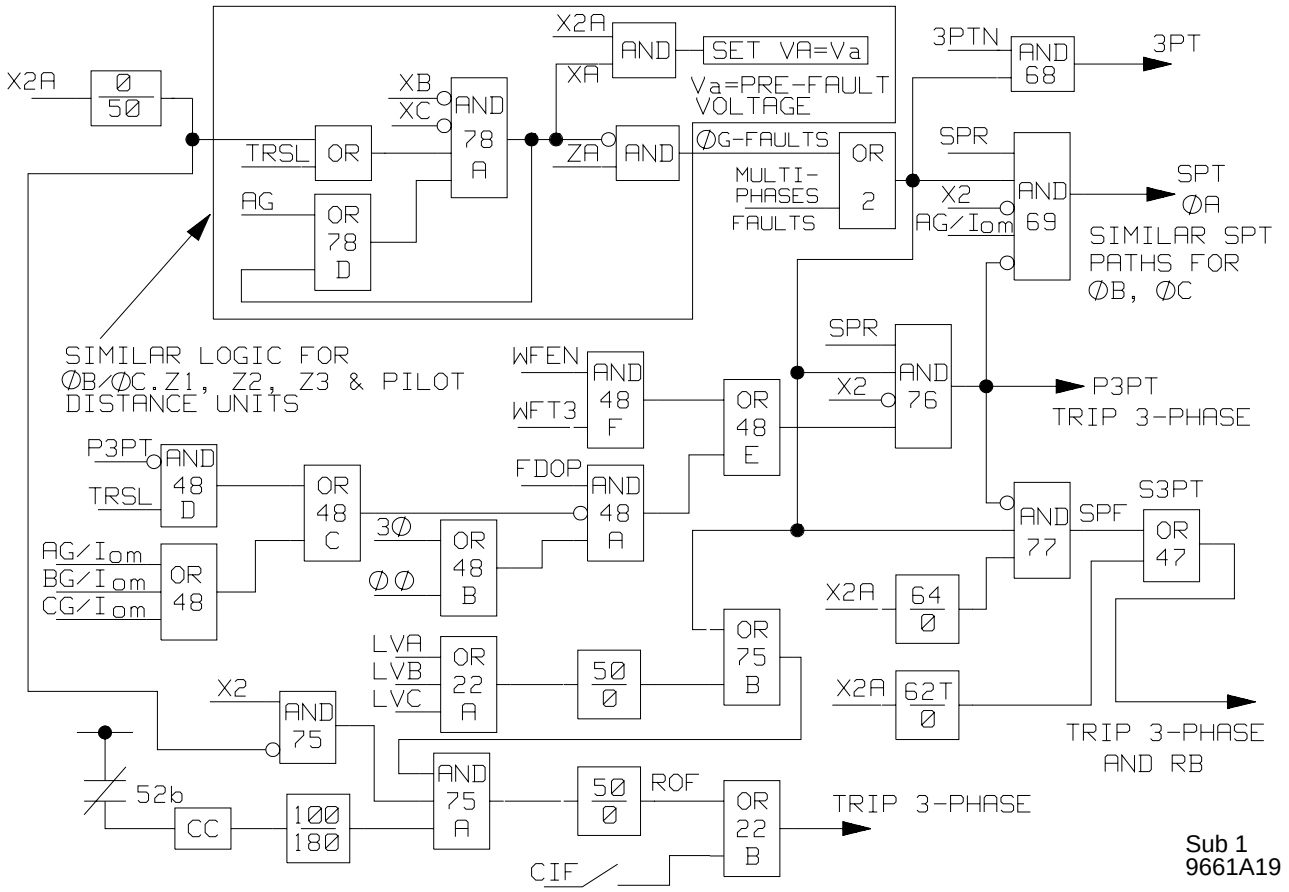

Figure 3-20: Single Pole Trip Logic

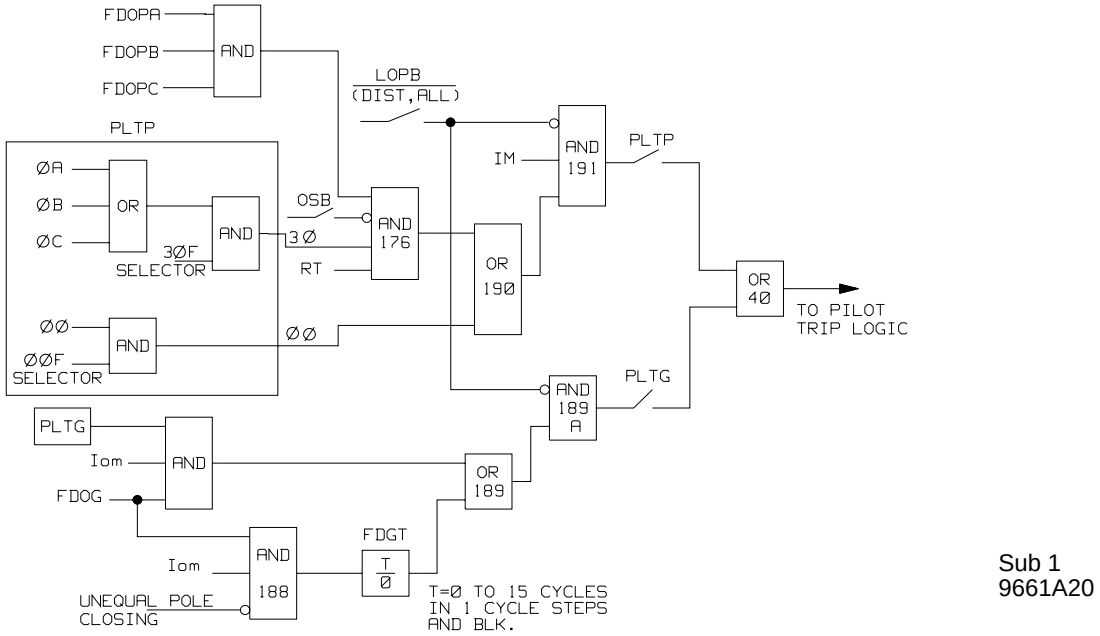

Figure 3-21: Pilot Trip Relay

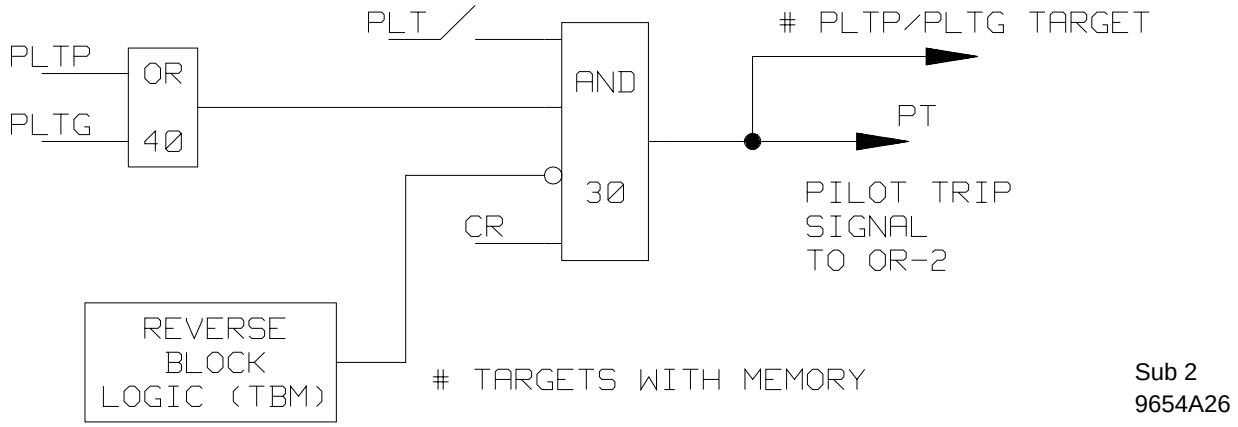

Figure 3-22: POTT/Unblocking Pilot Trip Logic

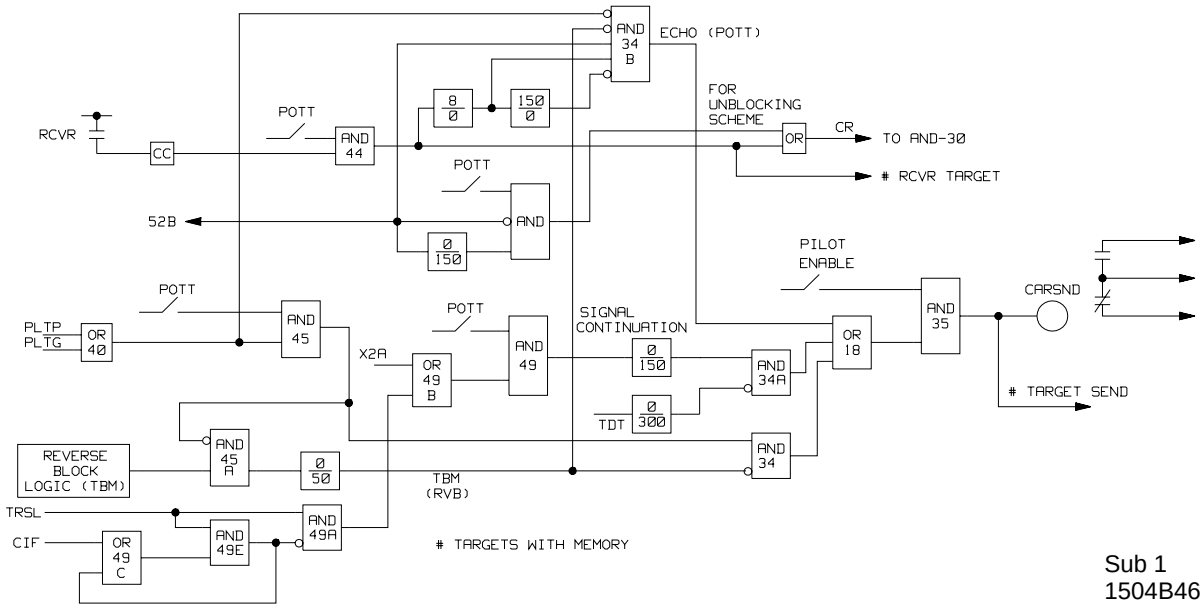

Figure 3-23: Carrier Keying/Receiving Logic in POTT/Unblocking Schemes

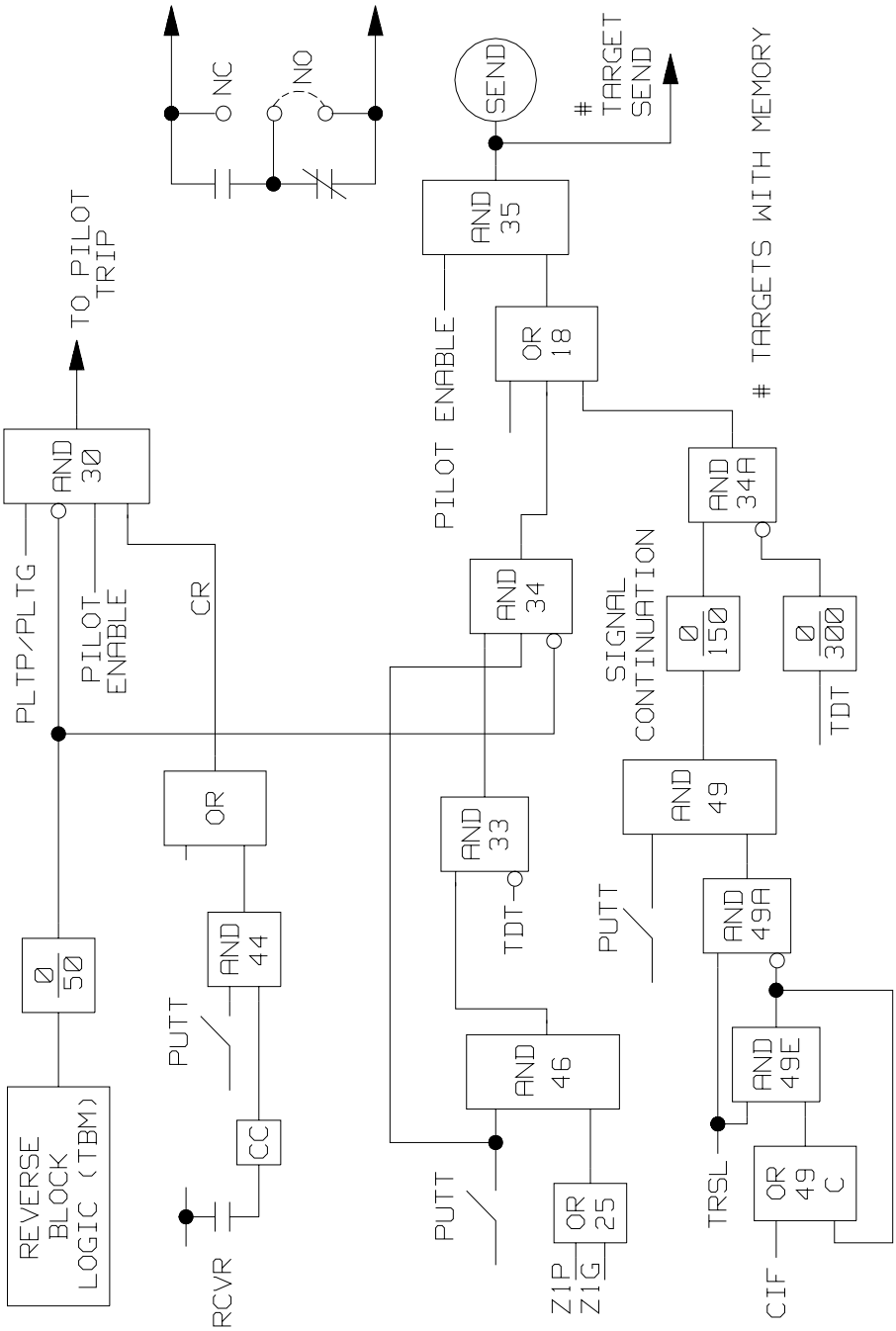

Figure 3-24: PUTT Keying Logic

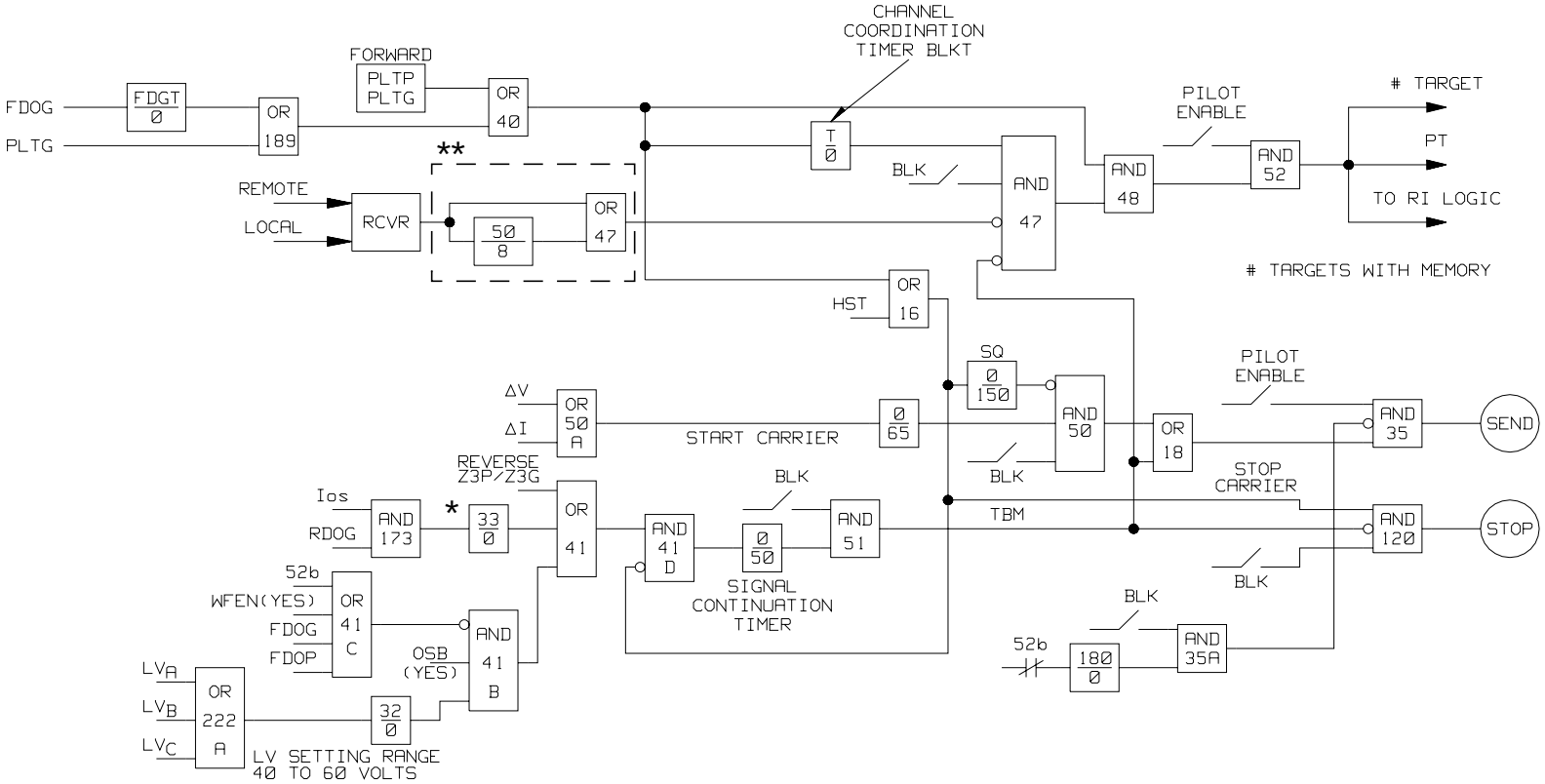

* Version 2.20 only, timer is $\frac{16}{0}$

** Version 2.22 and higher

Sub 1
1504B93

Figure 3-25: Blocking System Logic

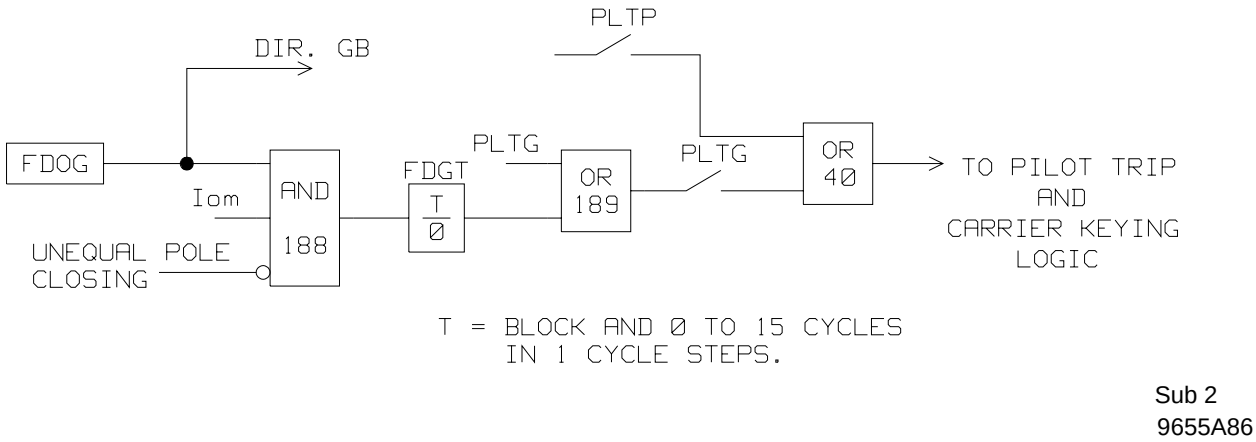

Sub 2
9655A86

Figure 3-26: PLTG Supplemented by FDOG

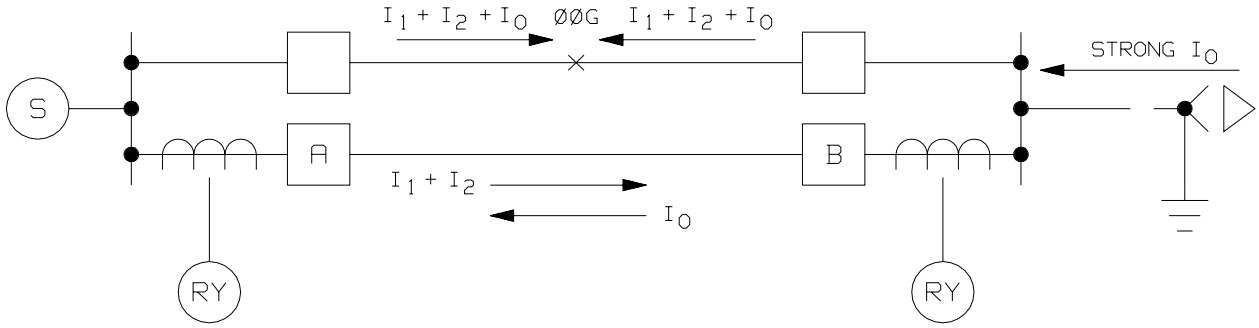

Sub 1
9654A17

Figure 3-27: Power Reversed on POTT/Unblocking Schemes

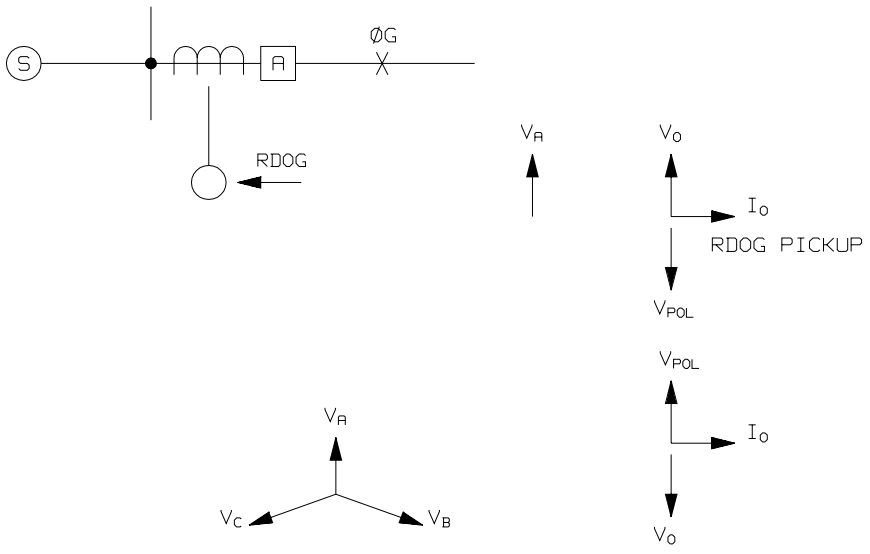

Sub 1
9654A29

Figure 3-28: Unequal Pole Closing on Fault

Sub 1
9654A30

Figure 3-29: Additional Logic for POTT/Unblocking Schemes on 3-Terminal Line Application

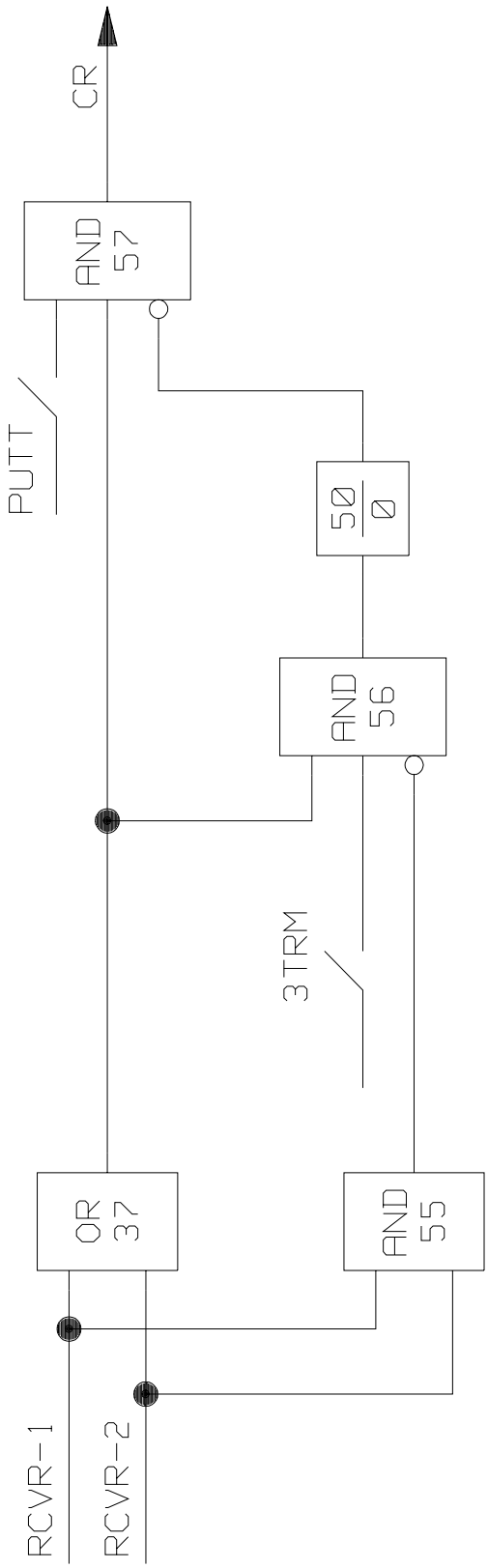

Sub 1
9654A31

Figure 3-30: Additional Logic for PUTT Scheme on 3-Terminal Line Application

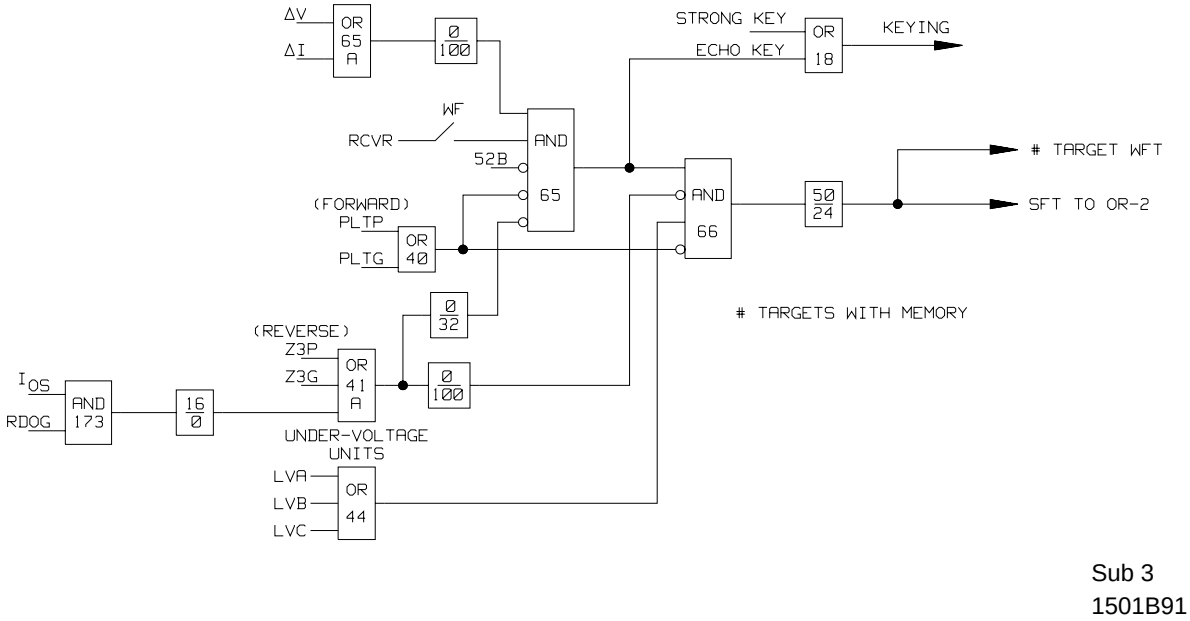

Figure 3-31: Weakfeed Application

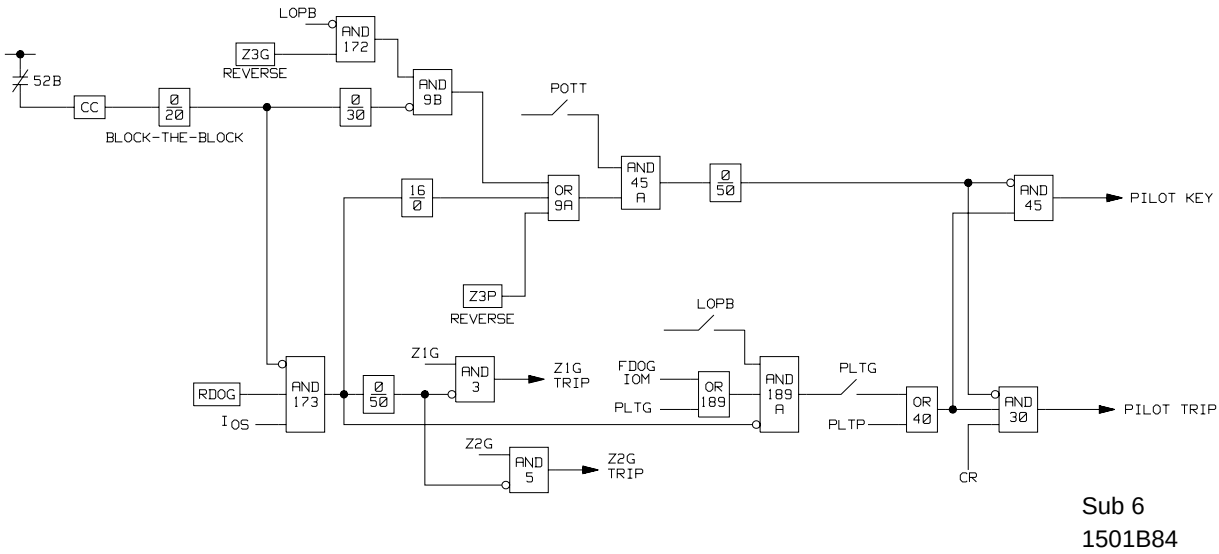

Figure 3-32: Reversible Zone 3 Phase and Ground (Reverse Block Logic)

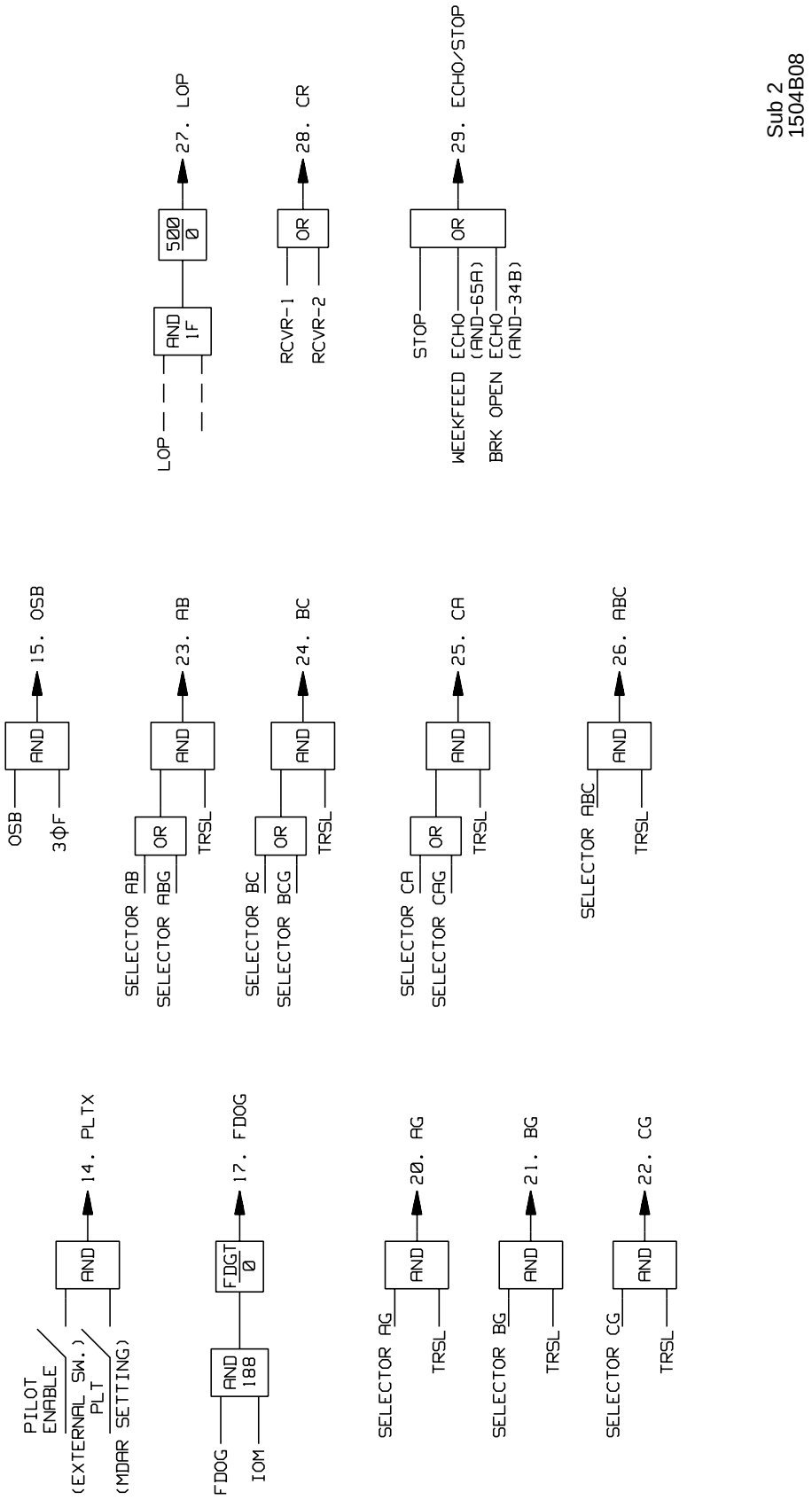

Figure 3-33: Composite Signal For Programmable Output Contacts

TABLE 3-1: REL300 CATALOG NUMBERS

Typical Catalog Number

REL300 DIGITAL RELAY SYSTEM (50/60 HZ)	**MD**	**3**	**B**	**1**	**S**	**P**	**F**	**R**	**G**
TRIP									
Three Pole Trip	3								
Single Pole Trip	1								
Three Pole Trip w/Programmable Contacts *	8								
CURRENT INPUT									
1A	A								
5A	B								
BATTERY SUPPLY VOLTAGE									
48/60 Vdc	4								
110/125 Vdc	1								
220/250 Vdc	2								
POWER SWING BLOCK									
Power Swing Block	S								
PILOT SYSTEM/CHANNEL INTERFACE									
Pilot System-Channel Interface	P								
Non-Pilot System, No Channel Interface	N								
TEST SWITCHES									
FT-14 Switches	F								
No FT-14 Switches	N								
COMMUNICATION INTERFACE									
RS-232C	R								
RS-232C (with IRIG - B port)	B								
INCOM	C								
SOFTWARE OPTION (Oscillographic Data Storage STD)**									
Version 2.0X	G								
Version 2.1X	A								
Version 2.2X	B								

* Available in 2.1X and 2.2X Versions only

** Remote Communications Program (RCP) software and Optional Oscillographic and Recording software (OSCAR) can be ordered separately, catalog number SWOSC01

TABLE 3-2: REL300 ACCESSORIES	
REL300 ACCESSORIES	
1. FT-14 TEST PLUG	
• Right-Side	1355D32G01
• Left-Side	1355D32G02
2. TEST FIXTURE AND EXTENDER BOARD	
• Inner Chassis Test Fixture (5 Amp)	2409F39G01
• Inner Chassis Test Fixture (1 Amp)	2409F39G02
• External Board Assembly	1609C55G01

TABLE 3-3: SINGLE-POLE-TRIP OPERATING MODES

SINGLE-POLE-TRIP OPERATING MODES

"TTYP" SET AT POSITION	TRIP MODE	RECLOSING INITIATE
OFF	3PT on all faults	No reclosing
1PR	3PT on all faults	RI2 on ϕG faults only
2PR	3PT on all faults	RI2 on ϕG/ϕϕ/ϕϕG faults
3PR	3PT on all faults	RI2 on all faults
SPR	SPT on ϕG faults 3PT on others	RI1 on ϕG faults only no reclosing on others
SR3R	SPT on ϕG faults 3PT on others	RI1 on ϕG faults RI2 on others

TABLE 3-4: REL300 PROGRAMMABLE OUTPUT CONTACTS

REL300 PROGRAMMABLE OUTPUT CONTACTS			
		Description	**Value**
	1.	Z1P trip output	Z1P
	2.	Z1G trip output	Z1G
	3.	Z2P trip output	Z2P
	4.	Z2G trip output	Z2G
	5.	Z3P trip output	Z3P
	6.	Z3G trip output	Z3G
	7.	PLTP trip output	PLTP
	8.	PLTG trip output	PLTG
	9.	High set phase trip output	ITP
	10.	High set ground trip output	ITG
	11.	GB trip output	GB
	12.	Close-into-fault trip output	CIFT
●	13.	TBM signal output (BLK/POTT)	TBM
●	14.	Pilot in service	PLTX
●	15.	OSB pickup	OSB
	16.	Carrier send output	SEND
●	17.	FDOG/IOM/FDGT output	FDOG
	18.	Inner blinder 21BI pickup	21BI
	19.	IOS without timer	IOS
●	20.	Phase selector AG	AG
●	21.	Phase selector BG	BG
●	22.	Phase selector CG	CG
●	23.	Phase selector AB of ABG	AB
●	24.	Phase selector BC or BCG	BC
●	25.	Phase selector CA or CAG	CA
●	26.	Phase selector ABC with TRSL	ABC
●	27.	LOP with delay pickup/without delay dropout	LOP
●	28.	RCVR-1 or RCVR-2	CR
●	29.	POTT scheme — ECHO (either weakfeed or open breaker key) } BLK scheme — STOP }	ECHO/STOP
●	30.	LLT or WFT	LLT/WFT

● *Refer to Figure 3-33 (page 75) for the signals and logics.*

Section 4. INSTALLATION, OPERATION AND MAINTENANCE

WARNING

Check jumper #3 on the Microprocessor module for phase rotation ABC or ACB. Remove jumper#3 for system ABC rotation. Refer to section 1.8 (page 7) for ACB system.

4.1 SEPARATING THE INNER AND OUTERCHASSIS

It is recommended that the user of this equipment become acquainted with the information in these instructions before energizing the REL300 and associated assemblies. Failure to observe this precaution may result in damage to the equipment.

All integrated circuits used on the modules are sensitive to and can be damaged by the discharge of static electricity. Electrostatic discharge precautions should be observed when operating or testing the REL300.

CAUTION

Use the following procedure when separating the inner chassis from the outer chassis; failure to observe this precaution can cause personal injury, undesired tripping of outputs and component damage.

a. Unscrew the front panel screws.

b. If the REL300 does not have FT-14 switches, but has a power switch on the front panel, turn “OFF” the power switch before sliding out the inner chassis.

c. If the REL300 has FT-14 switches:

   1) Remove the FT-14 covers (one on each side of the REL300).

   2) Open all FT-14 switches.

WARNING

Do Not Touch any FT-14 switch; they may be energized.

   3) Slide out the inner chassis.

   4) Close all FT-14 switches.

   5) Replace the FT-14 covers.

d. Reverse procedures above when replacing the inner chassis into the outer chassis.

4.2 TEST PLUGS AND FT-14 SWITCHES

Test Plugs are available as accessories (see Table 3-2, page 77); they are inserted into the FT-14 switches for the purpose of System Function Tests. When the Test **Plugs are inserted, the FT switch #13 (BP) and #14 (BN) must remain closed.**

4.3 EXTERNAL WIRING

All external electrical connections pass through the Backplate (Figure 4-1, page 93er chassis. If the REL300 is used without the FT-14 switch, six 14-terminal connectors on the Backplate (TB1 through TB6) are used. If the FT-14 switch (option) is included, using the two peripheral areas of the REL300 cabinet, then only four of the 14-terminal connectors (TB2 through TB5) are used. Three DIN connectors (J11, J12, J13) allow for the removal of the outer chassis (Backplane module) from the inner chassis (Interconnect module).

Electrical inputs to the Backplane module, which are routed either directly through the Backplate or through the FT-14 switch to the Backplate, include (Figure 4-1, page 93):

- V_A, V_B, V_C and V_N
- I_A/I_{AR}, I_B/I_{BR}, I_C/I_{CR}, and I_P/I_N
- BP (48, 125 or 250 Vdc) and BN (negative)

Analog input circuitry consists of four current transformers (I_A, I_B, I_C, and I_N), three voltage transformers, (V_A, V_B and V_C), and low-pass filters. The seven transformers are located on the Backplane PC Board. The primary winding of all seven transformers are directly-connected to the input terminal TB6/1 through 12; the secondary windings are connected through the Interconnect module to the Filter module.

As shown in Figures 4-1 and 4-2 (page 93 and page 94), dry contact outputs for breaker failure initiation (BFI), reclosing initiation (RI), reclosing block (RB), failure alarm (AL1), trip alarm (AL2), SEND and STOP are located on the Backplane PC Board. Optical isolators are for Pilot Enable, External Reset, Receiver #1 and #2, 52a, 52b, SBP (89b) and studs for chassis ground (GND) and location for the Communication Interface are also shown.

As shown in Figure 4-3 (page 95), the power system ac quantities (V_a, V_b, V_c, V_n, I_a, I_b, I_c and In), as well as the dc source are connected to the left side FT-14 switch (front view). All the trip contact outputs are connected to the right-side FT-14 switch (front view). Switches 13 and 14 on FT-14 may be used for disabling the Breaker Failure Initiation/Reclosing Initiation (BFI/RI) control logic.

The INCOM® or RS232 PONI (Product Operated Network Interface) communication box is mounted through the Backplate of the outer chassis and connected to the Backplane module, and remote settings (see section 4.7, page 87).

4.4 REL300 FRONT PANEL DISPLAY

The front panel display consists of a vacuum fluorescent display, seven LED indicators, seven push-button switches, and five test points (as shown in Figure 1-1, page 8).

4.4.1 Vacuum Fluorescent Display

The vacuum fluorescent display (blue color) contains four alphanumeric characters for both the function field and the value field. All the letters or numbers are fourteen segment form (7.88mm x 13mm in size).

A software display saver is built in. The REL300 display will be on only for 5 minutes after turning on the dc power supply or depressing any one of the front panel push-button or detecting any fault on the line.

4.4.2 LED Indicators

There are seven LED indicators on the front panel display:

- 1 “relay-in-service” indicator
- 1 “value accepted” indicator
- 5 display-select indicators

When the “Relay-in-Service” LED illuminates, the REL300 Relay is in service, there is dc power to the relay and the relay has passed the self-check and self-test. The LED is turned “OFF” if the Relay-in-service relay has at least one of the internal failures shown in the “Test” mode, and the trip will be blocked.

The “Value Accepted” LED flashes only once, to indicate that a value has been entered successfully.

The five indicators used for the display selection are:

- Settings
- Volts/Amps/Angle
- Last Fault
- Previous Fault
- Test

One of these indicators is always illuminated, indicating the mode selected. The display will be blocked momentarily every minute for the purpose of self-check; this will not affect the relay protection function.

4.4.3 Push-button Switches

The front panel contains seven push-button switches:

- Display Select
- Reset Targets
- Function Raise
- Function Lower

- Value Raise
- Value Lower
- Enter (recessed for security purposes)

The “Display Select” push-button is used to select one of the five display modes, which is indicated when the proper LED illuminates. When a fault is detected, the “Last Fault” flashes once per second. If two faults are recorded, the “Last Fault” flashes twice per second, and the prior fault will be moved from “Last Fault” to “Previous Fault”. The new fault data will be stored in the “Last Fault” register. By depressing the “Reset Targets” push-button, the flashing LED indicators are cleared, and the LED will revert back to the Metering mode. The information in the “Previous Fault” and “Last Fault” will not be reset from the front panel push-button switch, but will be reset from External Reset (TB5/5 and TB5/6) and the remote reset through the Communication Interface.

The “Function Raise” and “Function Lower” pushbuttons are used to scroll through the information for the selected display mode. The “Value Raise” and “Value Lower” pushbuttons are used to scroll through the different values available for each of the five functions. The “Enter” pushbutton is used to enter (in memory) a new value for settings.

If the display is in “sleep” mode (no readout), by depressing any one of the pushbuttons will resume the illumination of the vacuum fluorescent display.

4.4.4 Test Points

Five test points -24V, + 5V, -12V, +12 Volts and common are removed from the front panel for this REL300 version.

4.5 FRONT PANEL OPERATION

The front (operator) panel provides a convenient means of checking or changing settings, and for checking relay unit operations after a fault. Information on fault location, trip types, phase, operating units, and breakers which tripped become available by using the pushbuttons to step through the information. Targets (fault data) from the last two faults are retained, even if the relay is deenergized. The operator is notified that targets are available by a red flashing LED on the front panel; in addition, alarm 2 output-relay contacts are provided for the external annunciators.

The operator can identify nonfault voltage, current and phase angle on the front panel display. Settings can be checked easily, however, any change to the settings requires the use of the pushbuttons. When relay is in the normal operating mode, it is good practice to set the LED on the Volts/Amps/Angle mode.

4.5.1 Settings Mode

In order to determine the REL300 settings that have been entered into the system, continually depress the “DISPLAY SELECT” push-button until the “SETTINGS” LED is illuminated. Then depress the “FUNCTION RAISE” or “FUNCTION LOWER” push-button, in order to scroll through the REL300 SETTINGS functions (see Table 4-1, page 96). For each settings function displayed, depress the “VALUE RAISE” or “VALUE LOWER” push-button in order to scroll through the REL300 values available for the particular function. (Each value that appears, as each different function appears in the function field, is considered to be the “current value” used for that particular function.)

In order to change the “current value” of a particular settings function, “RAISE” or “LOWER” the FUNCTION field until the desired function appears (e.g., “RP”). Then “RAISE” or “LOWER” the values in the VALUE field until the desired value appears. If the “ENTER” push-button (recessed for security purposes) is depressed, the value which appears in the VALUE field will replace the “current value” in memory; but only if the “VALUE ACCEPTED” LED flashes once to indicate that the value has been successfully entered into the system.

For reasons of security, a plastic screw is used to cover the ENTER push-button. A wire can be used to lock the plastic screw and to prevent any unauthorized personnel from changing the settings.

4.5.2 Metering (Volts/Amps/Angle) Mode

When the Volts/Amps/Angle LED is selected by the “Display Select” push-button, the phase A, B, C voltages, currents and phase angles are available for on-line display during normal operation. All measured values can be shown by scrolling the “Raise” or “Lower” push-button in the FUNCTION field. The values on the display are dependent on the settings of RP (read primary); RP= YES for the primary side values and RP = NO for the secondary values. Conditions such as loss-of-potential, loss-of-current and out-of-step blocking can also be monitored. The function names and values are shown in Table 4-2 (page 99).

NOTE: **All displayed Phase Angles use V_A as reference.**

The phase rotation of ABC or ACB is also displayed on the metering mode depends on the setting of JMP3 position on processor module.

4.5.3 Target (Last and Previous Fault) Mode

The REL300 system saves the latest 16 faults records. The “LAST FAULT” information is of the most recent fault, the “PREVIOUS FAULT” information is of the fault prior to the “LAST FAULT”. These displays contain the target information along with the “frozen” data at the time of trip. The “LAST FAULT” register shows one or two records stored by flashing the LED once or twice per second, respectively. These records can be deleted by External Reset voltage TB/5 (+) and TB5/6 (-) or through a remote communication interface. The front panel (RESET) push-button allows the user to reset the flashing LED to Metering position only. It will not erase the fault in formation.

Different types of faults with related descriptions are shown in Table 4-3. As soon as a fault event is detected, the most recent two sets of target data are available for display. If the FDAT is set at “TRIP”, the “Last Fault” is the data associated with the most recent trip event. The “Previous Fault” contains the data from the prior trip event. If a single fault occurs, the “Last Fault” LED flashes. If a reclosing is applied and the system trips, the original “LAST FAULT” information will be transferred to the “Previous Fault” memory. The latest trip information will be stored in the “Last Fault” memory, and its LED flashes twice per second. If FDAT is set at Z2TR, two events (Zone 2 pickup or trip) will be stored. If FDAT is set at Z2/Z3, the two events will be either Zone 2 pickup or Zone 3 pickup or any type of trip. The same description applies to a remote communication which can store up to 16 events.

4.5.4 Test Mode (Self-Check Routine)

The software of the REL300 relay contains several self-check routines (see Section 1.6, page 6). When the “Test” mode is selected by the “Display Select” push-button, the failure modes (represented by their corresponding bits) are shown in the VALUE field.

Using the following table, failure mode can be determined by equating bit numbers to failure description. A bit set to "1" indicates the corresponding ailure has been detected.

RELAY STATUS FAILURE MODE	
FAILURE DESCRIPTION	**BIT NUMBER**
RAM Failure	0
EEPROM* Warning**	1
EPROM Checksum Fail***	2
EEPROM Failure	3
Analog Input Failure	4
Microprocessor Failure	5
Setting Discrepancy	6

* Electrically Erasable Programmable Read Only Memory (Non-volatile memory

** "EEPROM Warning" indicates a non-fatal error related to the failure of the EEPROM check routine. All data stored in the EEPROM is written to 3 identical arrays. These arrays are continuously checked for agreement with each other. If any of the 3 arrays disagree (2 arrays must agree with each other) an "EEPROM Warning" is given. This is the only failure which does not take the protection out of service. (Also the "Protection In-Service" LED remains lighted.)

*** "EPROM Checksum Failure" indicates the program memory has failed. With the exception noted above, ("EEPROM Warning") relay tripping is blocked to prevent false operation, upon failure of the self-check routine. Also the "Protection In-Service" LED goes out.

For reference the binary-to-hexadecimal conversion is shown below:

HEX DIGIT	BINARY REPRESENTATION			
0	0	0	0	0
1	0	0	0	1
2	0	0	1	0
3	0	0	1	1
4	0	1	0	0
5	0	1	0	1

HEX DIGIT	BINARY REPRESENTATION			
6	0	1	1	0
7	0	1	1	1
8	1	0	0	0
9	1	0	0	1
A	1	0	1	0
B	1	0	1	1
C	1	1	0	1
D	1	1	0	1
E	1	1	1	0
F	1	1	1	1

All bits are expressed in HEX byte form. For example, if the display shows “STAT 1B”, whose binary representation is 00011011, this means that the relay failed the self-check in the area of External RAM (bit 0), EEPROM (one-out-of-three failure, bit 1), (two-out-of-three failure, bit 3) and Analog Input Circuit (bit 4). Normally, the test mode should show “STAT 0", meaning that the relay has passed the self-check routines.

Bit 6 is for the setting discrepancy detection. **If the ordering information calls for single-pole trip option and the jumper #2 on the Microprocessor module is on position “1-2” which is for three-pole or programmable output contact logic, the REL300 will give the error of “STAT 40"**. **(Position 2-3 for single-pole trip application.)**

CAUTION

When the selector is in TEST mode, scroll the function field by the Raise push-button. The Value field display shows RS1 (Carrier Receiver #1), RS2 (Carrier Receiver #2), RS1, 2 (Carrier Receiver #1 and #2), and “TK” (Carrier Send) for the use of REL300 functional test. Refer to the Pilot Acceptance Test (Section 6.1.13, page 122) for more detailed information. If jumper (JP5) on the microprocessor module is IN, the following ten functions will be shown:

- TRIP
- BFI
- RI1
- RI2
- RB
- AL1
- AL2
- GS
- SEND
- STOP

All of these contact outputs can be tested by pressing the “ENTER” push-button.

For the opto-input hardware check, apply a rated dc voltage to any opto-input terminals. When OPTI in function field is selected on the test mode, a non-zero HEX value will be shown in the value field and is identified as follows:

INPUT DESCRIPTION	BIT NUMBER
Channel receive contact closure input #1, RX1	Bit 0
Channel receive contact closure input #2, RX2	Bit 1
Pilot enable contact closure input, PILOT	Bit 2
Stub bus contact closure input, SBP	Bit 3
52a contact closure input, 52a	Bit 4
52b contact closure input, 52b	Bit 5
External reset contact closure, EXTRST	Bit 6

If the input terminals of Pilot (Bit 2), RX1 (Bit 0) and 52b (Bit 5) with a rated voltage applied, the display will show “OPTI 25", e.g., it is equivalent to a binary number of 00100101.

4.6 JUMPER CONTROLS

The following jumpers are set at the factory; the customer normally does not need to move the jumpers. Refer to Table 4-4 (page 102) for the recommended jumper positions.

4.6.1 Backplane Module

An external jumper should be wired to the right side FT switch #13 (term. #2) and #14 (term #4). See Figure 4-3 (page 95).

When FT switch #13 or #14 is opened, the BFI and RI output relays are disabled to prevent BFI and RI contact closures during system function test.

4.6.2 Interconnect Module

The factory sets jumpers (JMP1 through JMP6 and JMP13) for 48 Vdc or 125 Vdc input source.

JMP7 & 9 are used for Stub Bus Protection (SBP). If SBP is not used, move JMP7 & 9 to 8 & 10 position for the second set of AL2-2 use.

NOTE: **If the customer intends to use a voltage other than 48 Vdc or 125 Vdc, see the jumper position and voltage settings printed on the Interconnect Module.**

4.6.3 Microprocessor Module

The following jumpers are normally set during factory calibration:

- JMP1, JMP8, JMP9 — for EEPROM and RAM circuitries, and are normally set to position 1-2. JMP 1, 8, 9 are removed for Module Sub 5 and higher.

- JMP2 — normally set to position 1-2 for three pole trip or programmable output contact logic. Set position 2-3 for single-pole trip logic only.
- JMP3 — Phase rotation; “OUT” for ABC, “IN” for ACB
- JMP4 — set to “IN” for trip contact with dropout time delay.
- JMP5 — set to “IN” for output contact tests. Normally, set to “OUT”.
- JMP6 — normally set to “OUT” position; set to “IN” when making A/D converter calibration.
- JMP10, JMP11, JMP12 — Not used (or spare jumpers)

NOTE: **Should the customer need to gain access to any of the jumpers (above), see Table 4-4 (page 102).**

4.6.4 Power Supply Module

- JMP1 Carrier StopPosition 1-2 for NO contact and 2-3 for NC contact output
- JMP2 Carrier SENDPosition 1-2 for NO contact and 2-3 for NC contact output

4.6.5 Programmable Output Contact Module

- JMP1 Selection for NO or NC output contact of OC5
- JMP2 Selection for NO or NC output contact of OC6
- JMP3 Selection for NO or NC output contact of OC7
- JMP4 Selection for NO or NC output contact of OC8

4.7 COMMUNICATION PORT USE

4.7.1 Introduction

REL 300 can be communicated with for target data, settings, etc., through the man-machine interface (MMI), The relay can also be communicated with via the communication (comm.) port. Comm port communications, provide the user with more information than is available with the MMI. For example, all 16 targets are available and a more friendly user interface for settings can be accessed (all settings are displayed on a single screen on the user’s PC). This section will provide the details of the comm port options, personal computer requirements, connecting cables and all information necessary to communicate with and extract data from the relay. Additional communications details are contained in I.L. 40-603, (RCP) **Remote Communication Program.** As stated in Section 1.7 (page 7), RCP is required for all comm. port communications. Information about the communications protocol can be found in the RCP I.L.

4.7.2 Communication Port Options

REL 300 is supplied with a rear communications port. If the network interface is not specified, a RS-232C (hardware standard) communications port is supplied. Network interface comm. port option, **NET-PONI** (see I.L. 40-611 for details) allows the connection of the relay with many other devices to a 2-wire network. A detailed discussion of networking capabilities can be found in **AD 40-600, Substation Control and Communications Application Guide**.

RS-232C, rear comm. ports are of the removable, Product Operated Network Interface (PONI) type and are available in two styles. One is identified by a 25 pin (DB-25S) female connector, it is beige or gray and has a single data comm. rate of 1200 bps. The second style is a **RS-PON**I (see I.L. 40-610 for details) identified by a 9 pin (DB-9P) male connector and externally accessible dip switches (next to the connector) for setting the communication data rate. This port option is always black in color, can be set for speeds of 300, 1200, 2400, 4800, or 9600 bps (see Table 4-7, page 104) and offers an option for IRIG-B time clock, synchronization input.

4.7.3 Personal Computer Requirements

Communication with the relay requires the use of Remote Communication Program (RCP) regardless of the comm. port option. RCP is supplied by ABB Relay Division and is run on a personal computer (PC).

NOTE: REL 300 relays should use latest version of RCP.

To run the program requires an IBM AT, PC/2 PC or true compatible with a minimum of 640 kilobytes of RAM, 1 hard disk drive, a RS-232C comm. port and a video graphics adapter card. The PC must be running Version 3.3, or higher, MS-DOS.

4.7.4 Connecting Cables

With communication port option the connecting cable requirement can be different. Also, connecting directly to a PC or connecting to a modem, for remote communication, affects the connecting cable requirements. Table 4-6 (page 104) provides a summary of a plug pin assignments, pins required and cable connectors.

Some terminology will be defined to aid the user in understanding cable requirements in Table 4-6 (page 104). Reference, is often made to the “RS-232C” standard, for data communication. The RS-232C standard describes mechanical, electrical, and functional characteristics. This standard is published by the Electronics Industry Association (EIA) and use of the standard is voluntary but widely accepted for electronic data transfer. ABB relay communications follows the RS-232C standard for non-network data communication.

Although the RS-232C standard does not specify a connector shape, the most commonly used is the “D” shape connector. As stated in Section 4.7.2 (page 87), all ABB relay communication connectors are of the “D” shape (such as DB-25S).

Data communication devices are categorized as either Data Terminal Equipment (DTE) or Data Communication Equipment (DCE). A DTE is any digital device that transmits and/or receives data and uses communications equipment for the data transfer. DCE’s are connected to a communication line (usually a telephone line) for the purpose of transferring data from one point to another. In addition to transferring the data, DCE devices are designed to establish, maintain, and terminate the connection. As examples, a computer is a DTE device and a modem is a DCE device.

By definition the connector of a DCE is always female (usually DB-9S or 25S). Similarly, DTEs are always male (usually DB-9P or 25P). These definitions apply to the equipment being connected and to the connectors on the interconnecting cables.

One additional piece of hardware that is required, in some applications, is a “null” modem. Null modem’s function is to connect the transmit line (TXD), pin 2 by RS-232C standard, to the re-

ceive line (RXD), pin 3. A null modem is required when connecting like devices. That is DTE to DTE or DCE to DCE. A DCE to DCE, example, where a null modem is required, is the connection of a 25 pin, PONI to a modem.

A null modem function can be accomplished in the connecting cable or by separate null modem package. That is, by using a conventional RS-232C cable plus a null modem. One type of null modem, available from electronics suppliers, is B & B Electronics Type 232MFNM.

4.7.5 Relay Password and Settings Change Permission

To gain access to certain communication port functions, the REL 300 must have the remote setting capability permission **"SETR"** set to **"YES"** and knowledge of the relay password is required. All communications port functions listed below require **"SETR"** set to **"YES"** before the actions can be performed:

Update/Change Settings
Update Programmable Contact Settings
Enable Local Settings (capability)
Disable Local Settings (capability)
Activate Output Relays (contact testing function)

Access control, both setting permission and password knowledge is required for all communication port options.

Before attempting any of the above functions, the setting of **"SETR"** must be verified via the front panel MMI. Using the setting change procedure in Section 4.5 (page 82), verify or change **"SETR"** such that it is set to **"YES"**.

Using comm. port communications, the ability to change settings from the MMI can be disabled.The RCP, Password Menu Choice "Disable Local Settings" when selected, will block setting changes via the MMI. Blocking the front panel setting changes, may be useful for situations in which the access to the relay cannot be secured from tampering by unauthorized persons.

Password:

When the REL 300 is received from the factory or if the user loses the relay password, a new password can be assigned with the following procedure:

1) Turn off the relay dc supply voltage for a few seconds,

2) Restore the dc supply voltage and wait for the relay to complete the self check/start-up routine,

3) Using RCP, perform the Password Menu choice "Set Relay Password",

4) Use the word "password" when prompted for the "current relay password" and

5) Then enter a new password.

NOTE: Password setting change procedure must be completed within 15 minutes of energizing relay or "password" will not be accepted as the "current" password.

4.8 SIXTEEN FAULT TARGET DATA

The REL300 saves the latest 16 fault records, but only the latest two fault records can be accessed from the front panel. For complete 16 fault data, one of the communication interface devices are necessary. The activation of fault data storage is controlled by setting FDAT. (Refer to Section 3.4.19 (page 38) for detailed information.) The 16 intermediate fault targets are a standard feature. The activation of data storage is based on the setting of the optional OSC (see next section).

4.9 OSCILLOGRAPHIC DATA (Standard) (Optional Graphic Feature)

Sixteen sets of oscillographic data are stored in REL300. Each set includes seven analog traces (Va, Vb, Vc, Ia, Ib, Ic and In), with one cycle pre-fault and 7-cycle fault information, and 20 sets of digital data based on 8 samples per cycle.

The oscillographic data (OSC) collection can be set for TRIP, Z2TR, Z2/Z3, and ΔVΔI. For setting of OSC = TRIP, data are collected for the trip events. The data collection is started from ΔVΔI if the trip occurs within 7 cycles. For OSC = Z2TR, the data collection is triggered by Zone 2 pickup or any types of trip. For OSC = Z2/Z3, the collection is triggered by either Zone 2 or Zone 3 pickup (including the Zone 3 reverse setting) or trip. For OSC = ΔVΔI, the data collection is caused by any line disturbance, e.g., a sudden phase current change (by 1 amp) or a ground current change (by 0.5 Amp), or a voltage change (ΔV) greater than 7Vdc.

NOTE: Setting at ΔVΔI is not recommended because a lot of meaningless data will be stored, such as breaker opening or closing, etc.

NOTE: The (GS) General Start contact will activate for any ΔVΔI.

4.10 PROGRAMMABLE CONTACT OUTPUTS (Optional Feature)

The optional programmable output contact module consists of 8 relays, 4 with heavy duty NO contacts (OC1 to OC4) and 4 with standard contacts (OC5 to OC8) with jumper selection for NO or NC outputs. Contacts OC4 and OC8 provide timers for delay pickup and/or delay dropout. The ranges of timers are 0 to 5 seconds in 0.01 seconds steps with an error of 1 cycle. Every Contact (OC1 to OC8) can be programmed independently based on one or all of the 30 pre-assigned signals with AND/OR/NOT logic combination. These 30 signals are listed in Table 3-4 and Figure 3-33. All 8 output settings can only be performed through remote WRELCOM™ communication. An example of this programmable contact output WRELCOM™ screen is shown in Table 4-5 (page 103).

Selecting a function for an output contact is made by pressing the INSERT key with the cursor positioned at the crossing of the desired function and contact number. By pressing the function key F2 on the keyboard, the logic true (T) or logic negation (F) should be switched.

The DELETE key can be used to de-select a previously selected function.

If a contact is to be controlled by several functions, the same procedure applies for each function, without forgetting the combining operator OR or AND. To input a pickup or dropout time

delay (contact #4 or #8 only), press ENTER with the cursor positioned on the appropriate time delay. Press ENTER again to accept the desired time delay.

4.11 ROUTINE VISUAL INSPECTION

With the exception of Routine Visual Inspection, the REL300 relay assembly should be maintenance-free for one year. A program of Routine Visual Inspection should include:

- Condition of cabinet or other housing
- Tightness of mounting hardware and fuses
- Proper seating of plug-in relays and subassemblies
- Condition of external wiring
- Appearance of printed circuit boards and components
- Signs of overheating in equipment

4.12 ACCEPTANCE TESTING

The customer should perform the REL300 Acceptance Tests on receipt of shipment.

4.13 NORMAL PRECAUTIONS

Troubleshooting is not recommended due to the sophistication of the Microprocessor unit.

CAUTION

With the exception of checking to insure proper mating of connectors, or setting jumpers, the following procedures are normally not recommended. (If there is a problem with the REL300, it should be returned to the factory. See *PREFACE.)*

4.14 DISASSEMBLY PROCEDURES

a. Remove the inner chassis from the outer chassis, by unscrewing the two lockscrews (on the front panel), and unsnapping the two covers from the (optional) FT-14 switches, if the FT-14 switches are a part of the REL300 system.

NOTE: **The inner-chassis (sub-assembly) slides in and out of the outer chassis from the front. Mating connectors inside the case eliminate the need to disconnect external wiring when the inner chassis is removed.**

b. Remove the (optional) FT-14 switches, mounted by two screws on the side walls.

c. Remove the front panel (with the Display module) from the inner chassis, by unscrewing four screws behind the front panel.

d. Remove the Microprocessor module, by loosening six mounting screws, and unplugging the module from the Interconnect module.

e. Remove the Option (module), if the option module is part of the REL300 system, by unscrewing 2 mounting screws from the center support bar, and unplugging the Option module from the Interconnect module.

f. Remove the Power Supply and Filter modules, by first removing the Microprocessor module and the support cross bar.

g. Remove the Backplate, by unscrewing the mounting hardware from the rear of the Backplate.

h. Gain access to the Backplane and Transformer modules, by removing the Backplate.

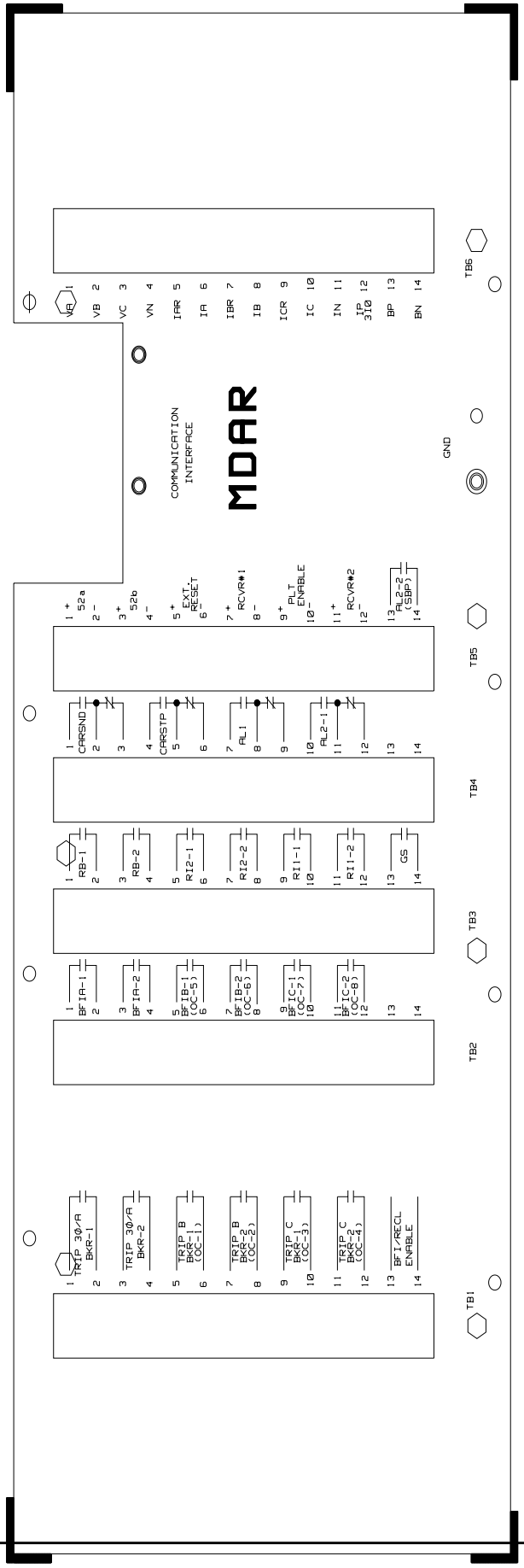

Sub 8
1354D22
Sheet 4 of 5

Figure 4-1: REL300 Backplate

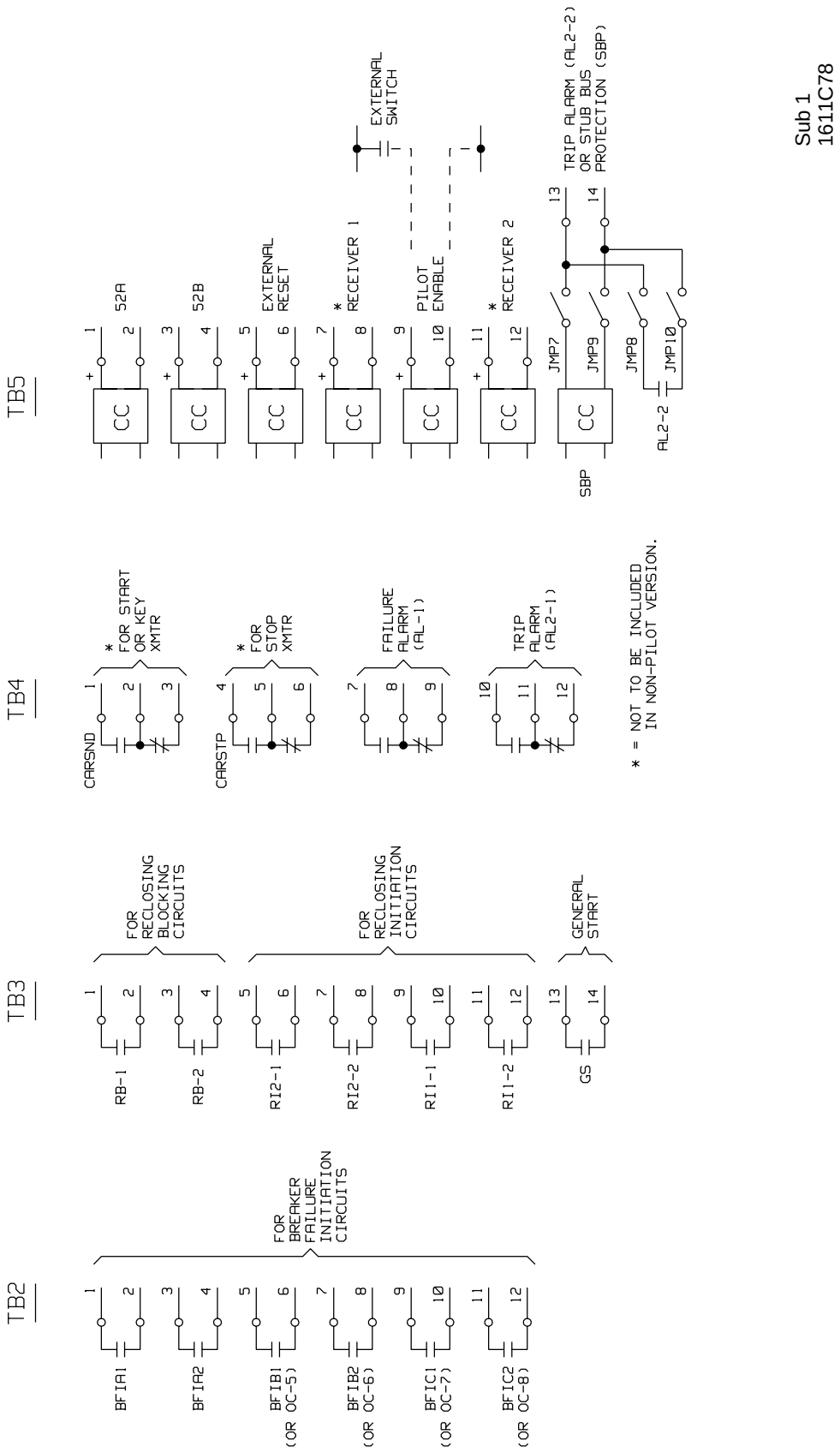

Figure 4-2: REL300 Backplane PC Board Terminals

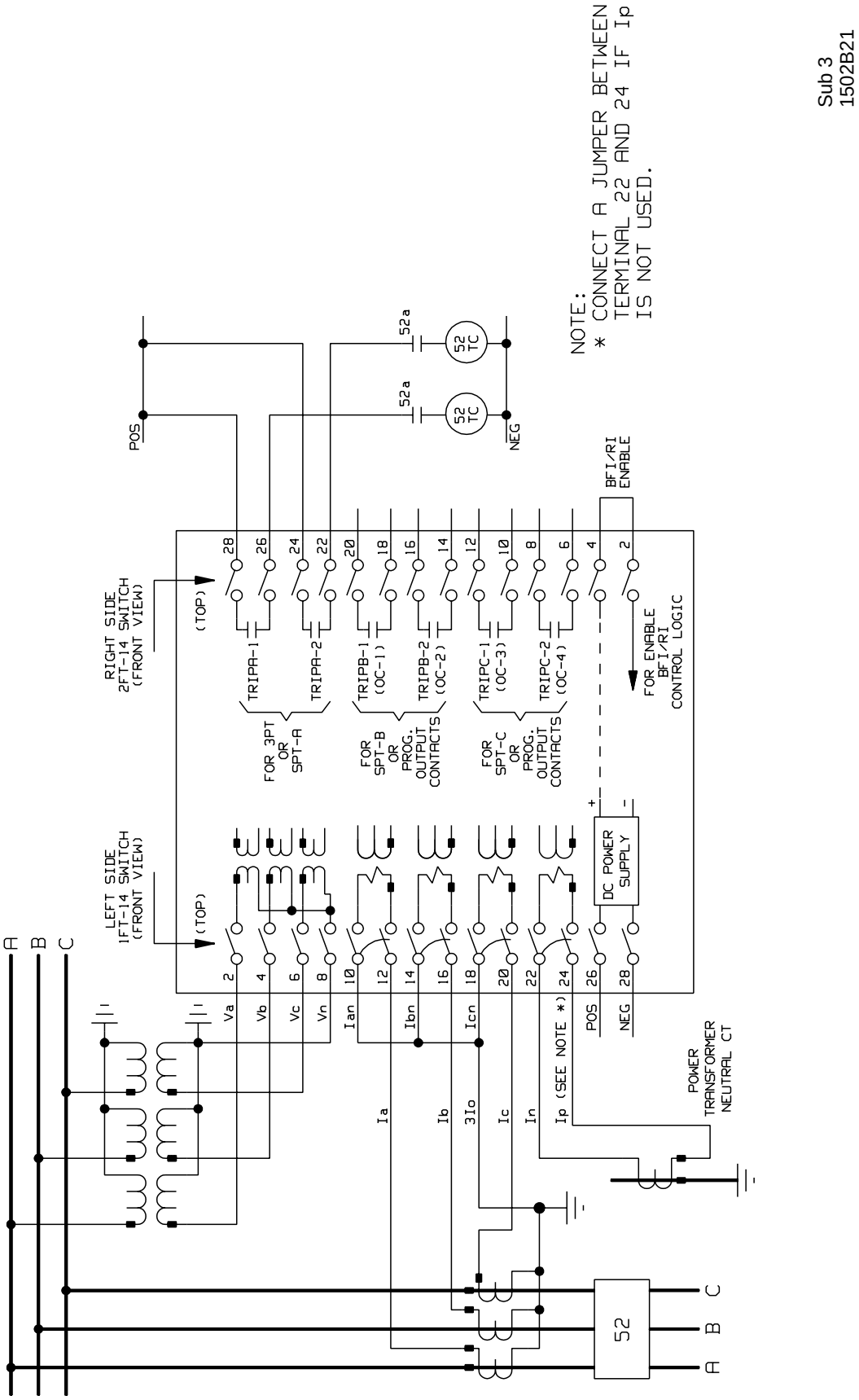

Figure 4-3: REL300 Systems External Connection

TABLE 4-1: SETTING DISPLAY (SHEET 1 OF 3)

Information/Settings	Displayed at Function Field	Displayed at Value Field (using 5 A ct and 60 Hz) (SEE NOTE ON SHEET 3)
Software version	VERS	numerical (0,1)
Oscillographic data initiation	**OSC** *	TRIP/Z2TR/Z2Z3/ΔVΔI
Fault data initiation	FDAT	TRIP/Z2TR/Z2Z3
ct ratio	**CTR**	30-5000 (5)
PT ratio	VTR	100-7000 (10)
Rated freq.	FREQ	60, 50
ct secondary rating	CTYP	5 or 1
Enable/disable readouts in primary I & V values	RP	YES/NO
Reactance for fault location (ohms per unit distance)	XPUD	0.300-1.500, in 0.001/DTYP
Fault location, displayed in km or miles	DTYP	KM or MI (miles)
Reclosing mode	TTYP	
1. 3PT on all faults, no RI		OFF
2. 3PT on all faults, with 3RI on ϕGF		**1PR**
3. 3PT on all faults, with 3RI on ϕGF/2ϕF		**2PR**
4. 3PT on all faults, w/3RI		**3PR**
5. SPT on ϕGF with SRI 3PT on MϕF without RI		SPR
6. SPT on ϕGF with SRI 3PT on MϕF with 3RI		SR3R
Single phasing limit timer	62T *	0.300-5000, in 0.050 sec. steps
RI on Pilot Trip	PTRI	YES/NO
RI on Z1T	Z1RI	YES/NO
RI on Z2T	Z2RI	YES/NO
RI ON Z3T	Z3RI	YES/NO
Breaker Failure Reclose block	BFRB	YES/NO
Pilot logic control	PLT	YES/NO
Pilot system selection:	STYP	
1. Non-Pilot, 3-zone distance		**3ZNP**
2. Zone-1 extension		Z1E
3. Permissive overreach transfer trip or unblocking		POTT
4. Permissive underreach transfer trip		PUTT
5. Blocking		BLK
Forward Direction Ground Timer	FDGT	BLK, 0 to 15 cycles in 1cycle steps
Weakfeed Enable	WFEN	YES/NO
3-Terminal Line Application	3TRM	YES/NO
Blocking system channel Coordination timer	BLKT	0-98, in 2 ms steps
Pilot phase setting	PLTP	OUT, 0.01-50.00 in 0.01 Ω steps
Pilot ground setting	PLTG	OUT, 0.01-50.00 in 0.01 Ω steps

**Optional*

TABLE 4-1: SETTING DISPLAY (SHEET 2 OF 3)

Information/Settings	Displayed at Function Field	Displayed at Value Field (using 5 A ct and 60 Hz) (SEE NOTE ON SHEET 3)
Zone 1 phase unit	Z1P	OUT, 0.01-50.00 in 0.01 Ω steps
Zone 1 ground unit	Z1G	OUT, 0.01-50.00 in 0.01 Ω steps
Zone 1 delay trip timer	T1	0-15 cycles in 1 cycle steps
Zone 2 phase unit	Z2P	OUT, 0.01-50.00 in 0.01 Ω steps
Zone 2 phase timer	T2P	BLK, 0.10-2.99, in 0.01 sec. steps
Zone 2 ground unit	Z2G	OUT, 0.01-50.00 in 0.01 Ω steps
Zone 2 ground timer	T2G	BLK, 0.10-2.99, in 0.01 sec. steps
Zone 3 phase unit	Z3P	OUT, 0.10-50.00 in 0.01 Ω steps
Zone 3 phase timer	T3P	BLK, 0.10-9.99 in 0.01 sec. steps
Zone 3 ground unit	Z3G	BLK, 0.01-50, 0.01 Ω steps
Zone 3 ground timer	T3G	BLK, 0.10-9.99 in 0.01 sec. steps
Zone 3 direction	Z3FR	FWD/REV
Pos. Seq. line impedance angle	PANG	0-90, in 1.0 degree steps
Zero Seq. line impedance angle	GANG	0-90, in 1.0 degree steps
ZOL/Z1L	ZR	0.1-10.0, in 0.1 steps
Low Voltage unit	LV	40-60 in 1.0V (rms) steps
Overcurrent units		
Low set phase	IL	0.5-10, in 0.1 A steps
Med. set phase	IM	0.5-10, in 0.1 A steps
Low set ground	IOS	0.5-10, in 0.1 A steps
Med. set ground	IOM	0.5-10, in 0.1 A steps
High set phase	**ITP**	OUT, 2-150.0, 0.5 A steps
High set ground	ITG	OUT, 2-150.0, 0.5 A steps
Out-of-step block	OSB	YES/NO
OSB override timer	OSOT	400-4000 in 16 ms steps
OSB inner blinder	RT	1.00-15.00, in 0.10 Ω steps
OSB outer blinder	RU	3.00-15.00, in 0.10 Ω steps
Directional overcurrent, zero or negative sequence	DIRU	ZSEQ/NSEQ/DUAL
Directional overcurrent ground backup time curve family	**GBCV**	OUT, CO2,5,6,7,8,9,11
Ground backup pick-up	GBPU	0.5-4.0, in 0.1 A steps
Ground backup time curves within family	GTC	1-63, in 1.0 steps
Choice of directional or non-directional ground backup	GDIR	YES/NO

* *Optional*

TABLE 4-1: SETTING DISPLAY (SHEET 3 OF 3)

Information/Settings	Displayed at Function Field	Displayed at Value Field (using 5 A ct and 60 Hz) (SEE NOTE)
CIF trip/stub bus protection	CIF	OUT/CF/CFT/STUB/SCF/SCFT
LLT trip	LLT	YES/FDOG/NO
LOP block	LOPB	NO/DIST/ALL
LOI Block	LOIB	YES/NO
Alarm 2 (Trip) Seal-In	AL2S	YES/NO
Remote Setting	SETR	YES/NO
Real Time Clock	TIME	YES/NO
1. Set Year	YEAR	1980-2079, in 1 year steps
2. Set Month	MNTH	1-12, in 1 month steps
3. Set Day	DAY	1-31 in 1 day steps
4. Set Weekday	WDAY	Sun, Mon, Tues, Wed, Thur, Fri, Sat
5. Set Hour	HOUR	0-24, in 1 hour steps
6. Set Minute	MIN	0-60, in 1 minute steps

NOTE: WHEN THE CTYP FUNCTION IS SET AT 1 AMPERE, THE RANGE OF THE FOLLOWING FUNCTIONS ARE AS SHOWN BELOW:

- ZIP/ZIG/Z2P/Z2G Z3P/Z3G/PLTP/PLTG 0.05-250.00, in 0.05 Ω steps
- ITP/ITG 0.4-30.0, in 0.1 A steps
- IL/IM/IOS/IOM 0.1-2.0, in 0.02 A steps

NOTE: SEE ALSO SECTION 5.2.4 (page 115), SELECTIONS OF CTYP SETTINGS.

NOTE: SEE PREFACE FOR INFORMATION ON SETTING NOMENCLATURE APPLIQUES.

NOTE: The increments of timers are based on the line frequency, e.g., 16 msec for 60 Hz and 20 msec for 50 Hz (to the nearest msec)

TABLE 4-2: METERING DISPLAY

Information	Displayed at Function Field	Displayed at Value Field
Phase A current (mag.)	IA	numerical, A (X.X)
Phase A current (ang.)	∠IA	deg. (X.X)
Phase A voltage (mag.)	VAG	numerical, v (XX.X)
Phase A voltage (ang.)	∠VAG	deg. (XX)
Phase B current (mag.)	IB	(0.0)
Phase B current (ang.)	∠IB	(0)
Phase B voltage (mag.)	VBG	(0.0)
Phase B voltage (deg.)	∠VBG	(0)
Phase C current (mag.)	IC	(0.0)
Phase C current (ang.)	∠IC	(0)
Phase C voltage (mag.)	VCG	(0.0)
Phase C voltage (ang.)	∠VCG	(0)
Month / Day	DATE	numerical (00.00)
Hour / Minute	TIME	numerical (00.00)
Local/Remote Setting	SET	LOC/REM/BOTH
Carrier Receive -1	RX1	YES/NO
Carrier Receive -2	RX2	YES/NO
LOP indication	LOP	YES/NO
LOI indication	LOI	YES/NO
Out-of-Step Block	OSB	YES/NO
Rotation of Phase Sequence	ROT	JABC/JACB

TABLE 4-3: TARGET (FAULT DATA) DISPLAY (SHEET 1 OF 2)

Information	Displayed at Function Field	Displayed at Value Field
Month / Day	DATE	XX.XX
Year	YEAR	XXXX
Hour / Minute	TIME	XX.XX
Second	SEC	XX.XX
Fault type	FTYP	AG/BG/CG/AB/BC/CA/ ABG/BCG/CAG/ABC
BKR.#1 ϕA tripped	BK1A	YES/NO
BKR.#1 ϕB tripped	BK1B	YES/NO
BKR.#1 ϕC tripped	BK1C	YES/NO
BKR.#2 ϕA tripped	BK2A	YES/NO
BKR.#2 ϕB tripped	BK2B	YES/NO
BKR.#2 ϕC tripped	BK2C	YES/NO
Zone 1 phase tripped	Z1P	YES/NO
Zone 1 ground tripped	Z1G	YES/NO
Zone 2 phase tripped	Z2P	YES/NO
Zone 2 ground tripped	Z2G	YES/NO
Zone 3 phase tripped	Z3P	YES/NO
Zone 3 ground tripped	Z3G	YES/NO
Pilot phase tripped	PLTP	YES/NO
Pilot ground tripped	PLTG	YES/NO
High set phase tripped	ITP	YES/NO
High set ground tripped	ITG	YES/NO
Close-into fault trip	CIF	YES/NO
Load-loss tripped	LLT	YES/NO
Ground backup tripped	GB	YES/NO
SPF tripped (SPF)	SPT[1]	YES/NO
62T tripped (SPT)	62T[1]	YES/NO
Fault location	Z	(In ohms)
Fault Z angle	FANG	(numerical)
Fault distance	DMI or DKM	(in miles or KM)
Prefault load current	PFLC	numerical, A
Prefault phase voltage	PFLV	numerical V
Prefault load angle	LP	numerical deg.
Carrier send	SEND	YES/NO
Receiver #1	RX1	YES/NO
Receiver #2	RX2	YES/NO
Weakfeed tripped	WFT	YES/NO

[1] *Optional*

TABLE 4-3: TARGET (FAULT DATA) DISPLAY (SHEET 2 OF 2)

Information		Displayed at Function Field	Value Field
Fault type	FTYP		AG/BG/CB/AB/BC/CA ABG/BCG/CAG/ABC
Fault voltage VA	(mag.)	VPA	numerical, V
	(ang.)	∠VPA	numerical deg.
Fault voltage VB	(mag.)	VPB	numerical V
	(ang.)	∠VPB	numerical deg.
Fault voltage VC	(mag.)	VPC	numerical V
	(ang.)	∠VPC	numerical deg.
Fault voltage 3V0	(mag.)	3VO	numerical V
	(ang.)	∠3VO	numerical deg.
Fault voltage IA	(mag.)	IPA	numerical A
	(deg.)	∠IPA	numerical deg.
Fault voltage IB	(mag.)	IPB	numerical A
	(deg.)	∠IPB	numerical deg.
Fault voltage IC	(mag.)	IPC	numerical A
	(deg.)	∠IPC	numerical deg.
Fault Current 3I0	(mag)	3I0	numerical A
	(deg.)	∠3I0	numerical deg.
Pol. current IP	(mag.)	IP	numerical A
	(deg.)	∠IP	numerical deg.
Month/Day		DATE	XX.XX
Year		YEAR	1980-2079
Hour/Minute		TIME	XX.XX
Second		SEC	XX.XX

TABLE 4-4: RECOMMENDED JUMPER POSITIONS (V2.2X)

OUTER CHASSIS

An External jumper between FT-Switch 13 and 14 of 2FT-14 should be connected permanently. (Refer to terminals 2 & 4 of 2 FT-14 on Figure 4-3, page 100.)

INTERCONNECT Module

JMP 1 to 6, & 13	For the rated input dc voltage
JMP 7 & 9	For Stub Bus Protection
JMP 8 & 10	For the trip alarm (AL2-2)
JMP 11 & 12	For REL300 with FT switches only

MICROPROCESSOR Module

JUMPER	POSITION	FUNCTION
JMP 1	1-2 *	EEPROM (8kx8)
JMP 2	2-3	Single-pole trip option
JMP 2	1-2	Three pole trip or Programmable contact outputs
JMP 3	OUT	Standard for Rotation ABC
JMP 3	IN	Rotation ACB
JMP 4	OUT	No dropout time delay for trip contacts
JMP 5	OUT	Disable output contact test
JMP 6	OUT	Normal operation
JMP 8 & 9	1-2 *	RAM (32kx8)
JMP 10, 11 & 12	IN/OUT	Spare jumpers

Note * : JMP1, 8 and 9 were removed for module with sub 5 or higher.

POWER SUPPLY Module

JMP1	1-2	Carrier Stop	NO
	2-3	Carrier Stop	NC
JMP2	1-2	Carrier Send	NO
	2-3	Carrier Send	NC

CONTACT Module (Optional)

JMP1	NO	OC-5 Contact, NO
	NC	OC-5 Contact, NC
JMP2	NO	OC-6 Contact, NO
	NC	OC-6 Contact, NC
JMP3	NO	OC-7 Contact, NO
	NC	OC-7 Contact, NC
JMP4	NO	OC-8 Contact, NO
	NC	OC-8 Contact, NC

TABLE 4-5: OUTPUT CONTACT SELECTION

File Substation Communicate Relay Commands Help (Alt H) Sec

Type q or Q to quit changes:

C8 DO 5000

Contact Output #	OR	AND	CIFT	Z2P	Z2GT	Z3P	Z3GT	GBT	PLGT	PLTP	BCG/	IOS	FDOG	CG	OSB	ECHO	LLT	LOPA	ITG	Z1GT	Z1P	ABC	SEND	ABG/	PLTX	AG	CAG/	ITP	TBM	CR	BG	21BI
1	X				T		T	T												T												
2		X							F	F										T	T											
3																																
4	X																															
5																																
6																																
7																																
8	X														T														T			

----------Logic Input Negation----------

Use up, down right, left arrows, Ins or Del keys for logic or Enter for timers.
F2: Toggle Logic Inputs: – Logic True (T) or Logic Negation (F).

Alt + D - Devices Alt + P - Pri/Sec 10/22/92 COM1 = 1200

Sub: Beaver Valley Substation 001 REL300

NOTE: Refer to Table 3-4 (page 78) for Description of Function.

TABLE 4-6: COMMUNICATIONS CABLE REQUIREMENTS

Connection Type	Cable (Straight = no null modem)	Pins Req'd. (All pins not required)	Cable Connectors	Notes
DB-25S, RS-PONI connected to PC*	Straight	2, 3, 7	To port: 25 pin DTE To PC: 9 or 25 pin DCE	
DB-25S, RS-PONI connected to modem	Null Modem	2, 3, 7	To port: 25 pin DTE to Modem: 25 pin DTE	
DB-9P, RS-PONI connected to PC*	Null Modem	2, 3, 5	To port: 9 pin DCE To Modem: 25 pin DTE	See IL 40-610 For settings
DB-9P, RS-PONI connected to modem	Straight	2, 3, 5	To port: 9 pin DCE To Modem: 25 pin DTE	See IL 40-610 For settings
DB-9S, RS-PONI connected to PC*	Straight	2, 3, 5, 7, 8	To port: 9 pin DTE To PC: 9 or 25 pin DCE	See Table 4-7 For settings
DB-9S, RS-PONI connected to modem	Null Modem	2, 3, 5, 7, 8	To port: 9 pin DTE To Modem: 25 pin DTE	See Table 4-7 For settings

*** A communications cable kit (item identification number 1504B78G01) will accommodate most connection combinations, in Table 4-6, is available through your local ABB representative.**

NOTE: DB - XS = female connector; DB - XP = male connector

TABLE 4-7: DIP SWITCH SETTING CHART

Dip Switch Pole 1	Dip Switch Pole 2	Dip Switch Pole 3	Port Data Rate (bps)	
0	0	0	300	Logic 1 is towards Printed Circuit Board Dip Switch poles 4 & 5 are not used
0	0	1	1200	
0	1	0	2400	
0	1	1	4800	
1	0	0	9600	
1	0	1	19200	
1	1	0	1200	
1	1	1	1200	

Section 5. SETTING CALCULATIONS

WARNING

Check jumper #3 on the Microprocessor module for phase sequence rotation ABC or ACB. Remove jumper #3 for system ABC rotation. Refer to Section 1.8 (page 7) for ACB system.

5.1 CALCULATION OF REL300 SETTINGS

The following REL300 setting calculations correspond to the setting categories in the Installation Section 4 (begining on page 79). Assume that the protected line has the following data:

- 18.27 miles
- Line reactance 0.8 ohms/mile
- 69 kV, 60 cycles
- Positive and negative sequence impedances:

ZIL(Pri) = Z2L(Pri) = 15∠77° ohms

- Zero sequence impedance:
  Z_{0L}(pri) = 50∠73° ohms
- Current Transformer Ratio (CTR):
  RC = 1200/5 = 240 (Set CTR = 240)
- Voltage Transformer Ratio (VTR):
  RV = 600/1 = 600 (Set VTR = 600)
- Relay secondary ohmic impedances are:

$Z = Z_{pri} \times R_C/R_V$

$Z_{1L} = Z_{2L} = 15\angle 77° \times 240/600 = 6\angle 77°$ ohms

$Z_{0L} = 50\angle 73° \times 240/600 = 20\angle 73°$ ohms

5.1.1 Ratio of Zero and Positive Sequence Impedances (ZR)

$ZR = Z_{0L}/Z_{1L} = 20/6 = 3.33$

then REL300 will automatically calculate the zero sequence current compensation factor (k_0) by using the value of ZR, PANG, GANG and equation (1) in section 3.2.1(page 26), i.e.,

$k_o = (Z_{0L} - Z_{1L})/Z_{1L} = ZR \angle(GANG-PANG)-1$

NOTE: **The setting range of ZOL/ZIL has been expanded 0.1 - 7.0 to 0.1 - 10. Also the setting ranges of Positive sequence line impedance angle (PANG), Zero sequence line impedance angle (GANG), have been expanded from 40˚ - 90˚ to 10˚ - 90˚ as well. These changes were made to accommodate a wide variety of system components and configurations. However, the selection of each setting has to be carefully considered if the maximum fault current is 200 Amperes (secondary or above).**

If the maximum fault current is 200 amperes (secondary) the following restrictions must be observed:

ZOL/ZIL less than or equal to 7.5
The setting difference of |PANG| - |GANG| = 50˚ or less

If the maximum fault current is less than 200 Amperes (secondary) these restrictions do not apply.

5.1.2 Zone 1 Distance Unit Settings

A setting of 80% of the line impedance for zone-1 reach is recommended, thus the Zone-1 phase and ground reach should be:

Z1P = 6 x 0.8 = 4.8 and
Z1G = 6 x 0.8 = 4.8

NOTE: **Z1P and Z1G can be set for different values if the application is required. Refer to Section 6.1.1.3 (page 122), Step 10 for calculation and example.**

As stated above, start with a setting of 80% of the line impedance for the zone-1 reach setting. Adjustment of the zone-1 reach (line percentage) should be considered if any of the following are true:

1. If the calculated zone-1 impedance is 0.5 ohms (secondary) or less, the line percentage used for the calculation should be 70-75%.
2. If the Source Impedance Ratio or SIR, (ratio of positive sequence source impedance to positive sequence line impedance) is in the range of 3-5, line percentage used for the calculation should be no more than 75%.
3. Circuit fault impedance angles in the range of 80 degrees produce dc time consonant of about one cycle. One cycle time constants result in maximum overreach error of about 16%. Hence the line percentage used should be no more than 70 - 75%. If the total fault impedance angle is greater than 86 degrees, the dc time constant is greater than 2.3 cycles, and the overreach error is reduced to 10 percent or less. the same is true if the fault impedance angle is less than 75 degrees. If system fault impedance angles are known to be either above 86 degrees or below 75 degrees, the line percentage, used for the zone-1 calculation, can be increased by 5 percent. (All angles are based on 60 Hz systems.)

   NOTE: **The fault impedance angle is fixed and is a measurement of the line characteristic, therefore, the fault impedance angle is the angle of current looking from the relay into the fault.**

4. If CCVT's, of the low-capacitance type, (e.g. 1960's vintage PCA-5 and PCA-8 designs) are in use, the line percentage used for the zone-1 calculation, should be 70-75%. Severe subsidence-transient related overreach has been noted in cases where low-capacitance

CCVT's are used in "short time" applications. An alternative to reducing the zone-1 settings, is to introduce a zone-1 time delay (T1) of one or two cycles and using the 80 percent zone-1 reach calculation.

5.1.3 Zone 2 and Pilot Distance Unit Settings

Generally, Zone-2 reach is set for 100% of the protected line plus 50% of the shortest adjacent line, For this example, if the shortest (or only) adjacent line primary impedance is 20 ohms, then the Zone-2 reach setting would be:

Z2P = 6 + (20 x 0.5) x 240/600 = 10 and
Z2G = 10

The pilot zone distance phase and ground reaches can be set either exactly or nearly equal to the Zone 2 phase and ground distance reach, which depends on the application. For this example, set it equal to Zone 2 reach, i.e.,

PLTP = 10 and PLTG = 10

NOTE: Z2P, Z2G, PLTP and PLTG can be set for different values or disabled if the application is required.

5.1.4 Zone 3 Distance Unit Settings

Generally, Zone-3 reach is set to underreach of the shortest Zone 2 reach of the adjacent line off the remote bus. A practical setting is set for 100% of the protected line plus 100% of the shortest adjacent line off the remote bus. For example, if the shortest Zone 2 reach off the remote bus is 25 ohms primary, and infeed effect may increase its impedance by 30%, then the Zone 3 reach setting should be:

Z3P = 6 + (25 x 1.3) x 240/600 = 19 and
Z3G = 19

NOTE: Z3P and Z3G can be set for different values if the application is required.

5.1.5 Overcurrent Unit Setting

a. The low set phase overcurrent unit is used for supervising the load-loss-trip and CIF functions. It should be set higher than the line charging current and below the minimum load current.

NOTE: It should be set above the maximum tapped load current if applicable.

Assume that the line charging current is negligible for this line section, and the minimum load current is 2.0 A secondary, then the low set phase overcurrent unit setting should be:

IL = 1

b. The medium set phase overcurrent unit is used for supervising the OSB function and all the phase distance units. this unit should be set not to limit the Zone 3 reach, but traditionally, its setting should be set higher than load current.

Assume that 4.5 amperes has no effect to the Zone 3 reach, and the maximum load current is 4.0 amperes, then the medium set phase overcurrent unit can be set to:

IM = 4.5

c. The low-set ground overcurrent unit is used for supervising the reverse directional overcurrent ground unit (RDOG) for transient block in pilot system and carrier SEND in Blocking system. It should be set as sensitive as possible. A setting of 0.5 amperes is recommended:

IOS = 0.5

d. The medium set ground overcurrent unit is used for supervising the trip of Zone 1, Zone 2 and Zone 3 ground distance units (Z1G, Z2G and Z3G), the forward directional overcurrent ground unit (FDOG). Generally, it is recommended to be set 2 times the IOS setting.

IOM = 2 x IOS = 1.0

e. The directional high set overcurrent phase and ground units (ITP and ITG) are used for direct trip function. The general setting criterion for the instantaneous direct trip unit is:

The unit should be set higher than 1.15 times the maximum fault on the remote bus, where the factor of 1.15 is to allow for the transient overreach. For this example, assume that the maximum load is not higher than the maximum forward end zone fault current, and the maximum phase and ground fault currents on the remote bus are 20 and 24 amperes, respectively, then the settings of the high-set phase (ITP) and the high-set ground (ITG) should be:

ITP = 20 x 1.15 = 23

ITG = 24 x 1.15 = 27.6

5.1.6 OSB Blinder Settings (RT and RU)

The requirements for setting the blinder units are:

- Inner blinder must be set to accommodate maximum fault resistance for internal 3-phase fault
- Inner blinder should not operate on severe stable swings
- Outer blinder must have adequate separation from inner blinder for fastest out-of-step swing to be acknowledged as an out-of-step condition
- Outer blinder must not operate on load

NOTE: For the setting of OSB = NO, the REL300 will not read the settings of OSOT and RU, however, RT is still used for load restriction.

a. Setting the Inner Blinder (21BI)

If the OSB is used to supervise tripping of the 3ϕ unit on heavy load current, the inner blinder 21BI must be set sufficiently far apart to accommodate the maximum fault arc resistance. A reasonable approximation of arc resistance at fault inception is 400 volts per foot. If a maximum ratio of “line voltage per spacing” is 10,000 volts/ft. for a high voltage transmission line, and if a minimum internal 3-phase fault current is calculated as:

$$I_{min.} = [E / 1.73(Z_A+Z_L)]$$

where Z_A is maximum equivalent source impedance, Z_L is line impedance and E is line-to-line voltage.

$$\text{then } R_{max} = 400 \times FT / I_{min.}$$

$$= 400 \times 1.73(Z_A+Z_L)/10000$$

$$= 0.0693\ (Z_A+Z_L)$$

Adding a 50% margin to cover the inaccuracies of this expression:

$$R_{max.} = 0.104(Z_A+Z_L) \text{ primary ohms}$$

$$R_S = 0.104(Z_A+Z_L)R_C/R_V \text{ secondary ohms}$$

Set inner blinder to:

$$R_T = R_S \times \cos(90° - PANG) \quad (1)$$

This is the minimum permissible inner blinder setting when it is used to provide a restricted trip area for a distance relay.

Another criterion that may be considered is based upon the rule of thumb that stable swings will not involve an angular separation between generator voltages in excess of 120°. This would give an approximate maximum of:

$$Z_{inner} = (Z_A+Z_L+Z_B)/ (2 \times 1.73) \quad (2)$$

$$= 0.288(Z_A+Z_L+Z_B) \text{ primary ohms}$$

$$Z_{inner} = 0.288(Z_A+Z_L+Z_B)R_C/R_V \text{ secondary ohm}$$

where Z_B is the equivalent maximum source impedance at the end of the line away from Z_A.

An inner blinder setting between the extremes of equations (1) and (2) may be used. This provides operation for any 3-phase fault with arc resistance, and restraint for any stable swing. Except in those cases where very fast out-of-step swings are expected, the larger setting can be used.

It will usually be possible to use the minimum inner blinder setting of 1.5 ohms.

b. Setting the Outer Blinder (21BO)

For slow out-of-step swings, a reasonably close placement of outer to inner blinder characteristic is possible. The separation must, however, be based on the fastest out-of-step swing expected. A 50 ms interval is inherent in the out-of-step sensing logic, and the outer blinder must operate 50 ms or more ahead of the inner blinder.

Since the rate of change of the ohmic value manifested to the blinder elements is dependent upon accelerating power and system WR^2, it is impossible to generalize. However, based on an inertia constant (H) equal to 3, and the severe assumption of full load rejection, a machine will experience (assuming a uniform acceleration) an angular change in position of no more than 20° per cycle on the first half slip cycle.

If the inner blinder were set for ($0.104Z_T$), and the very severe 20° per cycle swing rate were used, the outer blinder should be set for approximately:

$Z_{outer} = 0.5\ Z_T$ primary ohms (3)

where $Z_T = Z_A + Z_B + Z_L$

This is the minimum setting of the outer blinder for a 20° per cycle swing rate.

For example, if $Z_{inner} = 0.104\ Z_T$, $Z_{outer} = 0.5\ Z_T$, RT = 1.5

$$\frac{Z_{outer}}{Z_{inner}} = \frac{0.500}{0.104} = 4.8$$

$$\frac{Z_{outter}}{Z_{inner}} = \frac{R_U}{R_T} = 4.8$$

$$R_U = 4.8 \times 1.5 = 7.2$$

5.1.7 Overcurrent Ground Backup Unit (GB)

The overcurrent ground backup unit GB provides seven sets of curves, which are similar to the CO and MCO curves, for backing up the distance ground on high resistance ground faults. Four settings (GBCV, GBPU, GTC and GDIR) should be determined for applying this unit.

a. GBCV is the ground backup curve selection. Seven sets of familiar CO curves are provided (C02,5,6,7,8,9 and 11), and are shown in Figures 2-1 thru 2-7 (starting at page 16). The selection is based on the application and coordination time. A selection of “OUT” disables the ground backup function.

b. GBPU is the current level setting. Its range is 0.5 to 4.0 amperes in 0.5 steps. In general, the current level setting criterion is:

(I_{Fmin} /2) > Setting level > 2 x (Max. residual load, $3I_0$)

where I_{Fmin} = Minimum ground fault current for a fault two buses away

For better sensitivity, GBPU should be set at 0.5 amperes, this would be adequate for most of the application.

c. GTC is the time delay setting of the GB unit. As shown in Figures 2-1 thru 2-7 (starting at page 16), it has 63 setting selections, from 1 to 63 in 1.0 steps. In general, the time delay setting should be coordinated with any protective device downstream of the line section.

The following equation can be used to calculate the trip time for all CO curves from CO-2 thru CO-11 :

$$T\,(\text{sec}) = \left[T_0 + \frac{K}{(3I_0 - C)^P}\right] \times \frac{GTC}{24,000} \quad (\text{for } 3I_0 \geq 1.5) \qquad T(\text{sec}) = \frac{R}{(3I_0 - 1)} \times \frac{GTC}{24,000} \quad (\text{for } 1 < 3I_0 < 1.5)$$

Where $3I_0 = \dfrac{I_F}{GBPU}$

GBPU = Pickup current setting (0.5 to 4.0A).

GTC = Time curve dial setting (1 to 63).

T_0, K, C, P and R are constants, and are shown in Table 5-3 (page 120).

d. GDIR is the setting for directional control selection. The GB unit will become a directional torque control overcurrent ground unit if GDIR is set at YES.

e. DIRU controls the setting of the directional polarizing ground overcurrent unit. It has 3 selections:

ZSEQ — Zero sequence voltage polarization only.

DUAL — Both zero sequence voltage and current polarizations.

NSEQ — Negative sequence voltage and current operated.

Taking the CO-8 curve set as an example (see Figure 2-5, page 20), assuming that the maximum 3Io of unbalanced load is 0.2A, the minimum ground fault current for a fault two buses away is 10A, and 0.7 seconds is required for coordination with current of 20 times the GBPU setting, then the settings of the GB function should be as shown below:

10/2 > GB > 2 x 0.2 set GBPU = 0.5

Using the curve in Figure 2-1 (page 16), for 0.7 seconds at 20 times the GBPU setting, GTC should be set to 24.

- Set GBCV = C0-8 and
- Set GDIR = YES if directional control is required.
- Set DIRU = ZSEQ

5.1.8 Timer Settings

a. Zone-2 timer (T2) setting should be coordinated with the Zone-1 and other high-speed trip units on the adjacent line terminal. Coordination Time Interval (CTI) of 0.3 to 0.5 seconds is recommended. For example, if T2 of 0.4 seconds is used, then the phase and ground Zone-2 timers should be set as follows:

T2P = 0.4 and T2G = 0.4

NOTE: **T2P and T2G are separate timers; they can be set at different time settings.**

b. Zone-3 timer (T3) settings would be similar to the above. For example, if T3 of 0.8 seconds is required, then the phase and ground Zone-3 timer should be set as follows:

T3P = 0.8 and T3G = 0.8

NOTE: **T3P and T3G are separate timers; they can be set at a different time settings.**

c. For out-of-step block (OSB), if applied, the OSB override timer setting (OSOT) is determined by the power system operation. Its range is 400 to 4000 ms, in 16 ms steps. For example, set REL300 OSOT = 500 if OSB override time of 500 ms is required.

d. For single-pole trip application only, the single phasing limit timer setting (62T) is for preventing thermal damage to rotating machines, due to the I_2 component during single phasing. Its range is 300 to 5000 ms. in 50 ms steps. The setting should be based on the poorest $(I_2)^2{}_t$ constant of the machines in service. For example, set REL300 62T = 1550, if 3PT is required before 1.55 seconds and after one pole has been open and the breaker does not or cannot reclose.

e. For the blocking system only, the channel coordination timer setting (BLKT) is based on the following application criteria:

BLKT > (Slowest remote carrier start time + channel time + margin) - (the fastest local 21P/21NP pickup time)

Where channel time includes the transmitter and receiver times, and the times which occur between these devices, e.g., wave propagation, interfacing relays, etc.

For REL300:

fastest 21P/21NP pickup time	=	14 ms
slowest carrier start time	=	4 ms
suggested margin time	=	2 ms

For example, the REL300 channel coordination timer should be determined as shown below, if the channel time is 3 ms.

BLKT = (4 + 3 + 2) - 14= -5

i.e., set BLKT= 0

5.2 SELECTION OF REL300 SETTINGS

The following settings are determined by the application. They do not require calculation.

5.2.1 The OSC Setting

For selecting one of the 4 ways (TRIP/Z2TR/Z2Z3/ΔIΔV) to initiate the oscillographic data taken, where:

TRIP — start data taken only if trip action occurs.

Z2TR — start data taken if Zone 2 units pick up, or any trip action occurs.

Z2Z3 — start data taken if Zone 2 or Zone 3 units pick up, or any trip action occurs.

ΔIΔV — start data taken if ΔI, ΔV, Zone 2 or Zone 3 units pick up, or any trip action occurs.

NOTE: The setting of ΔI, ΔV, for OSC is not recommended.

5.2.2 The FDAT Setting

For selecting one of the 3 ways (TRIP/Z2TR/Z2Z3) to initiate the fault data taken, where:

TRIP — start to store fault data only if trip action occurs.

Z2TR — start to store fault data if Zone 2 units pick up or any trip action occurs.

Z2Z3 — start to store fault data if Zone 2 or Zone 3 units pick up or any trip action occurs.

5.2.3 The Current Transformer Ratio Setting (CTR)

Used for the load current monitoring, if it is selected to be displayed in primary amperes. It has no effect on the protective relaying system. For this example, set CTR = 240.

5.2.4 The Voltage Transformer Ratio Setting (VTR)

Used for the system voltage monitoring, if it is selected to be displayed in primary volts. It has no effect on the protective relaying system. For this example, set VTR = 600.

5.2.5 The Frequency Setting (FREQ)

FREQ should be selected to match the power system operating frequency. For example, select FREQ = 60 if the power system operating frequency is 60 Hertz.

5.2.6 The Current Transformer Type Setting (CTYP)

CTYP provides the flexibility for 5 Amp or 1 Amp rated current transformer selection. For example, select and set CTYP = 5 if a 5 Amp current transformer is used.

The setting of CTYP affects all the distance unit and overcurrent unit setting ranges. The ranges will be automatically changed as listed in Table 5-1(page 119).

5.2.7 THe Read Primary Setting (RP)

The RP should be set at YES if all the monitoring ac voltages and currents are selected to be displayed in primary KV and KA values, respectively.

5.2.8 Ohms Per Unit Distance Of The Line Primary Reactance Setting (XPUD)

XPUD is the multiplier for fault distance display. It has a range of 0.3 to 1.5 in 0.001 steps. In this example, the line primary reactance is 0.8 ohms/mile; set XPUD = 0.8.

The fault distance calculation is as follows:

$$DMI = \frac{VTR}{CTR} \times \frac{Z_S \times \sin\angle FAN}{XPUD}$$

Where Z_S is the secondary impedance magnitude, and FANG is the fault angle.

5.2.9 The Setting of DTYP

The setting of DTYP (distance type DKM &DMI) has a selection of MILE and KM. It should be selected to match with the setting of XPUD. For this example, select DTYP = MILE.

5.2.10 The Setting of TTYP

The setting of TTYP is for selecting the reclosing mode in single pole trip applications (if applicable). It has six selecting positions (OFF, 1PR, 2PR, 3PR, SPR, and SR3R). Refer to the guidelines for reclosing mode programming for the TTYP setting selection.

5.2.11 For An SPT Application

For an SPT application set the 62T single phasing limit timer from 300 to 5000 ms in 50 ms steps. The setting is based on the generator's $(I_2)^2t$ performance. LV should be set between 85% and 90% of the rated line-to-neutral voltage.

5.2.12 The Settings Of PTRI, Z1RI, Z2RI and Z3RI

The settings of PTRI, Z1RI, Z2RI and Z3RI, provide the selectivity for Pilot RI (reclosing initiation), Zone-1 RI, Zone 2-RI and Zone 3 RI, respectively. For the non-pilot system application, set Z1RI, Z2RI and/or Z3RI to YES, if RI is required when the particular distance zone operates. For the pilot reclosing, Z1RI should be set to "YES".

5.2.13 For A Pilot System

For a pilot system, set BFRB to YES if RB on the breaker failure squelch feature is required.

5.2.14 The Setting Of PLT

The setting of PLT (pilot) combines with the signal of Pilot Enable (on the backplane panel) and controls the operation of pilot and reclosing initiation. The absence of either signal will:

- disable the pilot system
- block the RI2 output, and
- allow an RI1 output for a non-pilot system.

The PLT can be set either locally from the front panel or, remotely, via the communication channel.

5.2.15 The STYP

The STYP (system type) selects the desired relaying system for the application. It has two selections: 3ZNP (3 zone non-pilot) and Z1E (Zone 1 extension) in the non-pilot REL300. There are five selections: 3ZNP, Z1E, POTT (permissive overreach transfer trip or unblocking), PUTT (permissive underreach transfer trip) and BLK (blocking) in the pilot REL300. It should be set to the desired selection.

5.2.16 Pilot REL300 Only

For the pilot REL300 only, the WFEN (weakfeed enable) selection should be set to YES for the weakfeed terminal, if applicable.

5.2.17 Permissive Pilot REL300 Only

For permissive pilot REL300 only, the 3TRM (3 terminals) setting should be selected to YES for all of the POTT/PUTT three terminals that apply, but for the BLK system the “YES” or “NO” makes no difference. Refer to section 3.21 (page 49) for the detailed information.

5.2.18 Application of POTT/BLK Systems

For application of POTT/BLK systems, the transient block logic is always in the POTT/BLK system, but it is initiated by the reverse looking units. The Z3FR setting should be set to “YES” and Z3P, Z3G should be set to 100% of the line impedance.

5.2.19 The FDGT (FDOG Trip Delay Timer)

The FDGT (FDOG trip delay timer) can be set from 0 to 15 cycles or block (BLK) as desired. It is recommended to set to 3 cycles or longer. Refer to Section 3.9 (page 47) for the detailed FDGT information.

5.2.20 Distance/overcurrent Units

Distance/overcurrent units can be disabled if required by the application. The following distance/overcurrent units can be disabled by setting the unit to OUT:

a. List of units which can be disabled:

   PLTP, PLTG, Z1P, Z2P, Z2G, Z3P, Z3G, ITP, ITG and GB.

b. Procedure to disable the unit:

5.2.20.1 **Switch REL300 to the setting mode, scrolling the function field to the proper function Then set the unit to OUT via the value field.**

5.2.20.2 **Set T1 up to 15 cycles** if Zone 1 delay trip is required.

5.2.20.3 **The T2P, T2G, T3P and/or T3G timer** functions can be disabled, if desired, by setting the timer to BLK.

5.2.20.4 **The Zone 3 distance units (Z3P and Z3G)** can be selected to reach forward-looking or reverse-looking by setting the Z3FR (Zone 3 forward or reverse) to FWD or REV. **For pilot application, Z3FR must be set to REV.**

5.2.20.5 **Set the positive sequence impedance angle** (PANG) value based on the positive sequence line impedance angle. This setting affects the performance of the distance units.

5.2.20.6 **Set the zero sequence impedance angle** (GANG) value based on the zero sequence line impedance angle. This setting affects the performance of the distance units.

5.2.20.7 **Set the ZR value** based on the absolute value of the ratio of the line impedances (Z_{OL}/Z_{1L}).

NOTE: **The settings of PANG and GANG have been expanded from 40-90 to 0-90 degrees and the ZR setting has been changed form 0.1-7.0 to 0.1-10.0 for underground cable appli-**

cation. The setting rule of PANG, GANG and ZR must be followed: if the setting difference of PANG and GANG is greater than 50 degrees OR the ZR setting is greater than 7.0, the operating range of the maximum fault current should be limited to 200 amperes; otherwise, the microcontroller may give an un-predicted result.

5.2.20.8 **The LV units** are used in CIFT, SPT and weakfeed logic in the REL300. They should normally be set to 40 volts unless a higher setting is required for more sensitive applications. Refer to Section 5.2.11 (page 116) for the SPT application.

5.2.20.9 **The polarizing approach** for the directional ground overcurrent unit is controlled by the setting of DIRU. It has 3 selections:

ZSEQ – Voltage polarization only.

DUAL – Both voltage and current polarization.

NSEQ – Negative sequence voltage and current polarization.

5.2.20.10 **Set GDIR** to YES if directional control is required for the GB function.

5.2.20.11 **Based on the requirements**, set Close-Into-Fault (CIF) and stub-bus protection functions, by selecting the value field (OUT/CT/CFT/STUB/SCF/SCFT) of CIF, where:

OUT – No CIFT or SBP selected

CF – Standard CIFT, without timer; No SBP

CFT – Modified CIFT, with timer; No SBP

STUB – SBP logic; No CIFT

SCF – SBP plus standard CIFT

SCFT – SBP plus modified CIFT

Refer to Section 3.4.7 (page 32) for the application of CIF with Timer (200/0).

5.2.20.12 **Set LLT (Load-Loss Trip) to YES, FDOG or NO** required by the system, where:

5.2.20.13 **YES–LLT trip with Z2 supervision.**

5.2.20.14 **FDOG–LLT trip with both Z2 and FDOG supervision.**

5.2.20.15 **NO–LT trip function is not used.**

5.2.20.16 **Refer to Section 3.4.9 for the LLT application.**

5.2.20.17 **Set LOPB to “DIST”**, if loss-of-potential block trip function on Z1, Z2, Z3 and Pilot is required, but the overcurrent units (ITP, ITG & GB) are still operative. Set LOPB to “ALL”: if loss-of-potential block all type of trip is required.

5.2.20.18 **Set LOIB to YES,** if loss-of-current block trip function is required.

5.2.20.19 **Set AL2S** to YES, if trip alarm seal-in is required. The Reset push-button can be used to reset the sealed AL2.

5.2.20.20 **Set the SETR to YES** if remote setting is required.

5.2.20.21 **Procedure** to set the real-time clock:

With REL300 in the “setting” mode, scroll the function field to TIME, and set the value to YES. Depress function push-button RAISE to display YEAR, MNTH (month, DAY, WDAY (week day), HOUR, and MIN (minute), and set the corresponding number via the value field. The REL300 clock will start at the time when the minute value is entered.

5.3 GUIDANCE FOR RECLOSING INITIATION MODE PROGRAMMING

5.3.1 For System Without SPT System:

a. Select TTYP = OFF or 1PR, or 2PR or 3PR, and

b. Select PLT = NO, and

c. Use the RI2 output contact for the reclosing circuit, and

d. Select one or all of the PTRI, Z1RI, Z2RI and Z3RI to YES, depending on the application.

5.3.2 For System With SPT System:

a. Select TTYP = OFF or 1PR, or 2PR, or 3PR, or SPR or SR3R and

b. Select one or all of the PTRI, Z1RI, Z2RI and Z3RI to YES, depending on the application.

c. Use the RI1 output contact for the SRI reclosing timing circuit, and the RI2 output contact for the 3RI timing circuit.

The Reclosing Initiation mode will be based on the TTYP setting, as shown in Table 5-2 (page 120).

5.4 SELECTION OF PROGRAMMABLE CONTACTS

Thirty signals have been pre-assigned as shown in Table 3-4 (page 78) and Figure 3-33 (page 75). The 4 heavy duty contacts (OC1 to OC4) connected to FT switches and 4 standard contacts (OC5 to OC8) can be selected from the 30 signals by ANDing or ORing them together. The selection can only be done from WRELCOM® Communication Channel. Contacts OC4 and OC8 provide timers for delay pickup and/or delay dropout. The ranges of timers are 0 to 5 seconds in 0.01 second steps.

5.5 BREAKER FAILURE CONTACTS

Refer to the information described in section 3-25 (page 50) for the BFI timing guide.

TABLE 5-1: CURRENT TRANSFORMER SETTINGS

REL300 UNITS	At CTYP = 5	At CTYP = 1
Z1P/Z1G/Z2P/Z2G Z3P/Z3G/PLTP/PLTG	0.01-50.00, in 0.01 Ω steps	0.05-250, in 0.05 Ω steps
ITP/ITG	2.0-150.00, in 0.5 A steps	0.4-30.0. in 0.1 A steps
IL/IOS/IOM/IM	0.5-10.0, in 0.1A steps	0.1-2.0, in 0.02 A steps

TABLE 5-2: RECLOSING INITIATION MODE PROGRAMMING

TTYP	TYPE OF FAULT	RECLOSING MODE
OFF	all	no reclosing
1PR	ϕG Other Faults	RI2 contact closes; no reclosing
2PR	ϕG, ϕϕ 3ϕ	RI2 contact closes; no reclosing
3PR	all	RI2 contact closes
SPR	Phase-to-ground Other Faults	RI1 contact closes; no reclosing
SR3R	Phase-to-ground Other Faults	RI1 contact closes; RI2 contact closes

TABLE 5-3: TRIP TIME CONSTANTS FOR CURVES

CURVE #	T0	K	C	P	R
C02	111.99	735.00	0.675	1	501
C05	8196.67	13768.94	1.13	1	22705
C06	784.52	671.01	1.19	1	1475
C07	524.84	3120.56	0.8	1	2491
C08	477.84	4122.08	1.27	1	9200
C09	310.01	2756.06	1.35	1	9342
C011	110	17640.00	0.5	2	8875

Section 6. FULL PERFORMANCE TESTS (V2.23)

The following kinds and quantities of test equipment are used for the REL300 Acceptance Tests:

- Voltmeter (1)
- Ammeter (1)
- Phase Angle Meter (1)
- Load Bank (2)
- Variac (3)
- Phase Shifter (1)
- Optional Double or Multi-Amp Test System

NOTE: **Before turning on the dc power supply, check jumper positions on the Interconnect and Microprocessor modules as shown in Table 4-4 (page 102). Also, refer to this table for relay system operation. Use Section 4.1 (page 79) as the guidelines when separating the inner and outer chassis.**

WARNING

Jumper #3 on the Microprocessor module is for the selection of phase sequence rotation ABC or ACB. Remove Jumper 3 for system ABC rotation for the following test. Refer to Section 1.8 (page 7) for ACB system.

Refer to the NOTE under Table 6-1 (page 141) for 1 amp ct application.

6.1 FULL PERFORMANCE TESTS

Full performance tests explore REL300 responses and characteristics for engineering evaluation. They are in two parts: Non-Pilot and Pilot Acceptance Tests.

NOTE: **Customers who are familiar with the REL300 performance and characteristics should disregard this section and proceed directly to Section 2 “Maintenance Tests”.**

6.1.1 Non-Pilot Performance Tests

To prepare the REL300 relay assembly for Non-Pilot Acceptance Tests, connect the REL300 per Figure 6-1 (page 143), Configuration 1.

6.1.1.1 Front Panel Check

Step 1. Turn on rated battery voltage. Check the FREQ setting to match the line frequency and ct type CTYP. Apply a balanced 3-phase voltage (70 Vac); the Alarm-1 relay should be energized. (Terminals TB4-7 and -8 should be zero ohms.)

Step 2. Check “RELAY-IN-SERVICE” LED; it should be “ON”.

Step 3. Press “RESET TARGETS” push-button; the green LED (Volts/Amps/Angle) should be “ON”.

Step 4. Press the DISPLAY SELECT push-button, and note that the mode LED cycles thru the five display modes. Release the push-button so that the SETTINGS mode LED is “ON”.

Step 5. Refer to the Installation Section, Table 4-1 (page 96 thru page 98, for all possible REL300 SETTINGS, and set the values in accordance with Table 6-1 (page 141). For Negative Sequence Directional Unit, change DIRU from ZSEQ to NSEQ. For dual polarizing directional ground unit, change DIRU to DUAL.

Step 6. Press the DISPLAY SELECT push-button to obtain the METERING mode (VOLTS/ AMPS/ANGLE). (Refer to Installation Section, Table 4-2, page 99.)

6.1.1.2 Angle Current and Voltage Input Check

Step 8. Using Figure 6-1 (page 143), Configuration 1, apply three ac voltages of 70 V_{LN} and an ac current of 1A. Adjust phase A current to lag phase A voltage (V_{AN}) by 75°.

Step 9. Press FUNCTION RAISE or FUNCTION LOWER push-button. Read input current (IA), input voltage (V_{AG}), and angle (ANG). All values within 5%.

NOTE: **Be sure that the RP setting is “NO”. If the RP setting is “YES”, the readings will be the primary side values.**

The angle measurement is for reference only. For I<0.5A, the display of angle will be blocked and show zero degrees.

6.1.1.3 Zone 1 Test/Single-Phase-To-Ground

Step 10. Using Figure 6-1 (page 143), Configuration 1, adjust:

V_{1N} = 30V

V_{2N} = 70V

V_{3N} = 70V

REL300 goes into fault mode processing only after the current detector is enabled. REL300 performs the test:

- Phase current (ΔI_A, ΔI_B, or ΔI_C) >1.0A peak and 12.5% change
- Voltage (ΔVan, ΔVbn, or ΔVcn) >7V and 12.5% change with a current change of ΔI>0.5 A

When one of the above is true, REL300 starts fault processing. In order to perform the above, apply a certain value of current *suddenly.* If REL300 does not trip, turn the current off, readjust to a higher value, and then *suddenly* reapply current.

The current required to trip can be calculated using the following:

$$I = \frac{V_{LN}}{Z_{1G} COS(PANG - X)\left[1 + \frac{(Z_R - 1)}{3}\right]}$$

From Table 6-1: (page 141)

- Z1G = 4.5 Ω
- PANG = 75°
- ZR = 3.0

using an X = 75° (lagging)

The current required to trip = 4.00A ±5 % for fault current lagging fault voltage by 75°. This is the maximum torque angle test. For other points on the MHO circle, change X to a value between 0° and 150°, and calculate the value of I.

See Table 4-3 (page 100) for a description of the following displayed fault data for:

- Fault Type (FTYP)
- Targets (BK1, Z1G)
- Fault Voltages (V_A, V_B, V_C, $3V_0$) and Currents (I_A, I_B, I_C, $3I_0$)

With the external jumper connected between TB1-13 and TB1-14, the BFIA-1, BFIA-2 should be closed. The GS contact will be ON for approximately 50 ms. when the fault is applied. Alarm 2 relay will be picked-up, which can be reset by the RESET button after the fault is removed. Change TTYP to 1PR; the RI2-1 and RI2-2 should be CLOSED. Change TTYP to 2PR (or 3PR). Repeat test; RI2-1 and RI2-2 should be closed. Change TTYP to “OFF”. Repeat test. RI2-1, RI2-2 should not be picked-up.

Repeat AG fault and measure the trip time, which should be < 2 cycles. Change the setting of T1 from 0 to 2. Repeat the test; the trip time should extend for an additional 2 cycles. Reset T1 to zero.

The following formula can be used when PANG ≠ GANG:

$$Vxg = (I_X + K_0 I_0) Zcg$$

or

$$Vxg = \left(I_x + \frac{K_0 I_x}{3}\right) Zcg$$

or $$I_X = \frac{V_{xg}}{Z_{cg}\left(1 + \frac{K_o}{3}\right)}$$

where

$$K_0 = \frac{(Z_{oL} - Z_{1L})}{Z_{1L}}$$

$$= |Z_R|\angle(GANG - PANG) \text{ -1}$$

$$I_X = \frac{V_{xg}}{|Z_{cg}|e^{jPANG}\left[1 + \frac{|Zr|e^{j(GANG - PANG)} - 1}{3}\right]}$$

or $$I_X = \frac{V_{xg}}{\frac{2}{3}|Z_{cg}|e^{jPANG} + \frac{1}{3}|Z_{cg}||Zr\ |e^{jGANG}}$$

Example:

Vag = 30 Z1g = 4.5 PANG = 85
GANG = 40 Zr = 3

$$Ia = \frac{30}{\frac{2}{3}(4.5)e^{j85} + \frac{1}{3}(4.5)(3)e^{j40}}$$

$$= \frac{30}{3\cos(85) + j\,3\sin(85) + 4.5\cos(40) + j4.5\sin(40)}$$

$$= 4.31\angle(-57.76)$$

This is the trip current (4.3A) at the maximum torque angle of -57.76° (current lags voltage by 57.76°).

The following equation should be used for the angle of x on the MHO circle:

$$Iax = \frac{30}{6.96\cos(57.76 - x)}$$

Step 11. Using Figure 6-1, Configurations 2 and 3, repeat (preceding) Step 10 for BG and CG faults. Note Targets**.**

6.1.1.4 Zone 1 Test/Three-Phase

Step 12. Using Figure 6-2 (page 144), connect current and voltage circuits and apply:

- V_{AN} = 30V ∠0° IA = 6.67 ∠–75°

- V_{BN} = 30V ∠–120° IB = 6.67 ∠–195°
- V_{CN} = 30V ∠120° IC = 6.67 ∠+45°

Using a value of x = 75° (lagging), the current required to trip is calculated as follows (Note Targets):

$$I = \frac{V_{LN}}{Z_{1P}\cos(PANG - X)} = 6.67A \pm 5\%$$

Since V2.22 uses $I_A + I_B + I_C$ to calculate $3I_0$, a balanced 3-phase current source is recommended to be used for this test ($3I_0 = 0$). Figure 6-2 (page 144) gives a concept of the test. If a Doble or Multi-Amp test set is used, be sure to synchronize the 3-phase currents. If possible, use a multi-trace storage scope to verify the waveforms of I_A, I_B and I_C.

In order to plot the MHO circle for different input angle (X), the setting of RT (and RU, if OSB option is included) should be at maximum (15 ohms). Refer to OSB test for detailed information. Set TTYP = 3PR. Repeat test; RI2-1 and RI2-2 should be closed. For TTYP = OFF, or 1PR, or 2PR repeat the test. RI2-1 and RI2-2 should be open.

NOTE: **For three-phase static fault test DO NOT apply voltage <7V. This affects memory and prefault requirements.**

6.1.1.5 Zone 1 Test/Phase-To-Phase

Step 13. Two methods can be used for this test.

a. Using T-connection (with Doble or Multi-Amp Test Unit; refer to Figure 6-3 (page 145) for external terminal connection and configuration 1.

- V_A = 1/2 V_F @ 0°
- V_B = 1/2 V_F @ 180°
- V_C = 3/2 (70) = 105V @ 90° lead

Using $V_F = V_A - V_B$ = 30V

- V_A = 15V @ 0°
- V_B = 15V @ 180°

NOTE: **Current (I_A) required to trip = 3.33A ± 5%, with an angle of -75 degrees.**

The following table is for BC and CA fault tests when the T-connection is used.

BC		CA	
V_{AN}	= 105 ∠90°	V_{AN}	= 15 ∠180°
V_{BN}	= 15 ∠0°	V_{BN}	= 105 ∠90°
V_{CN}	= 15 ∠180°	V_{CN}	= 15 ∠0°
I_F	= 3.33 ∠–75°	I_F	= 3.33 ∠–75°

b. Using Y-connection

NOTE: **This test is actually for ϕϕG testing (see Figure 6-3 (page 145), configuration 1).**

$$V_{AN} = \frac{1}{2} V_F \left(\frac{2}{\sqrt{3}} \angle 0°\right)$$

$$V_{BN} = \frac{1}{2} V_F \left(\frac{2}{\sqrt{3}} \angle -120°\right)$$

$$V_{CN} = \left(\frac{3}{2} \times 70 - \sqrt{|V_{AN}|^2 - \left|\frac{1}{2} V_F\right|^2}\right) \angle 120°$$

or

$$V_{AN} = 17.3 \angle 0°$$

$$V_{BN} = 17.3 \angle -120^c$$

$$V_{CN} = 96.4 \angle 120°$$

For either T or Y connection, using a value of x = 75° (lagging), current required to trip:

$$I = \frac{V_F}{2Z_{1P}\cos(\text{PANG} - X)}$$

From Table 6-1: (page 141)

- Z_{1P} = 4.5 Ω
- PANG = 75°

For Y-connection only, current (IA) required to trip = 3.33A ±5%, with an angle of -45°, because Ian has already lagged V_F (V_{ab}) by 30°. Review all targets.

NOTE: **The accuracy of the voltage reading in the metering mode is between 1 and 77 Vrms. The inaccurate reading on V_{CN} will not affect the results of the test.**

The reclose contacts (RI2-1 and RI2-2) should be closed for setting of TTYP = 2PR or 3PR, and should be open for TTYP = OFF or 1PR.

Step 14. Repeat Step 13 for both BC and CA faults. Use the following voltages for each fault type:

BC		CA	
V_{AN}	= 96.4 ∠120°	V_{AN}	= 17.3 ∠–120°
V_{BN}	= 17.3 ∠0°	V_{BN}	= 96.4 ∠120°
V_{CN}	= 17.3 ∠–120°	V_{CN}	= 17.3 ∠0°
I_F	= 3.33 ∠–45°	I_F	= 3.33 ∠–45°

6.1.1.6 Zone 2 Tests

Step 15. Press the DISPLAY SELECT push-button until the SETTINGS mode LED is displayed. Change the setting values to:

- Z1P = “OUT” (Zone 1 phase value)
- Z1G = “OUT” (Zone 1 ground distance)
- Z2P = 4.5 Ω (Zone 2 phase value)
- T2P = 1.0 sec (Zone 2 phase timer)
- Z2G = 4.5 Ω (Zone 2 ground value)
- T2G = 1.5 sec (Zone 2 ground timer)
- Z2RI = “YES” (Zone 2 reclosing)
- TTYP = “3PR” (Reclosing mode)

Step 16. Perform Steps 10 thru 14 (above) for Zone 2 only, using delayed trip times according to the zone 2 phase timer (T2P), and the Zone 2 ground timer (T2G). Tolerances for T2P and T2G are 5% for an input current that is 10% above the calculated value.

Repeat Step 10. The RI2 contacts 1 and 2 should be closed, and the RB contacts 1 and 2 should be open. Reset Z2RI to “NO”.

Repeat Step 10 again. The RI2 contacts 1 and 2 should be open and the RB contacts 1 and 2 should be closed.

Change the settings of T2G and T2P to BLK. Zone 2 should not be tripped for any type of fault.

6.1.1.7 Zone 3 Tests

Step 17. Press the DISPLAY SELECT push-button until the SETTINGS mode LED is displayed. Change the setting values to:

- Z2P = “OUT” (Zone 2 phase value)
- Z2G = “OUT” (Zone 2 ground distance)

- Z3P = 4.5 Ω (Zone 3 phase value)
- T3P = 2.0 sec (Zone 3 phase timer)
- Z3G = 4.5 Ω (Zone 3 ground value)
- T3G = 2.5 sec (Zone 3 ground timer)
- Z3FR = "FWD" (Zone 3 direction)
- Z3RI = "YES" (RI = Z3T)
- TTYP = "3PR" (Reclosing Mode)

Step 18. Perform preceding steps 10 thru 14 for Zone 3 only, using delayed trip times according to the Zone 3 phase timer (T3P), and the Zone 3 ground timer (T3G). Tolerances for T3P and T3G are ±5% for an input current that is 10% above the calculated value.

Repeat Step 10. The RI2 contacts 1 and 2 should be closed, and the RB contacts 1 and 2 should be open. Reset Z3RI to "NO".

Repeat Step 10 again. The RI2 contacts 1 and 2 should be open and the RB contacts 1 and 2 should be closed.

Step 19. Set Z3FR = REV, then repeat Step 10, except apply AG reversed fault (i.e., I_a leads Van by 105°). The relay should trip, at I_a = 4.2A, in 2.5 seconds. Reset Z3FR to "FWD".

NOTE: **For customers who use a computer to test the relays, or use their own settings for maintenance, refer to the following example to calculate and determine trip currents; set the relay as follows:**

Z1P	=	ZIG	=	4.5	T1	=	0			
Z2P	=	Z2G	=	6.0	T2P	=	T2G	=	0.2
Z3P	=	Z3G	=	9.0	T3P	=	T3G	=	0.3
PANG	=	GANG	=	75°	ZR	=	3		

a. Single-Phase-to-Ground Fault

Use the equation in Step 10, and the following input voltages:

$$V_{AN} = 45\angle 0° = V_{LN}$$

$$V_{BN} = 70\angle -120°$$

$$V_{CN} = 70\angle 120°$$

The single-phase trip currents for Zone 1, Zone 2, and Zone 3 at the maximum torque angle $(I_A\angle 75°)$ are 6.0A, 4.5A and 3.0A, respectively.

b. Phase-to-Phase Fault

Use the T-connection and the equation in step 13. Apply the following input voltages:

$$V_{AN} = 18\angle 0° = \frac{1}{2}V_F$$

$$V_{BN} = 18\angle -180° = \frac{1}{2}V_F$$

$$V_{CN} = 105\angle 90$$

The single-phase trip currents for Zone 1, Zone 2 and Zone 3 at the maximum torque angle $(I_{AB}\angle -75°)$ are 4A, 3A and 2A, respectively.

c. Three-Phase Fault

Use the equation in Step 12 with the following input voltages:

$$V_{AN} = 27\angle 0° = V_L$$

$$V_{BN} = 27\angle -120°$$

$$V_{CN} = 27\angle 120°$$

The three-phase trip currents for Zone 1, Zone 2 and Zone 3 at the maximum torque angles

$$(I_A\angle -75°, I_B\angle -195°, I_C\angle +45°)$$

should be 6.0A, 4.5A and 3.0A, respectively.

6.1.1.8 Instantaneous Overcurrent (High-Set Trip)

Step 20. Using the SETTINGS mode, change the following settings:

ITP	=	10A		Z1P	=	Z1G	=	OUT
ITG	=	5A		Z2P	=	Z2G	=	OUT
LOPB	=	NO		Z3P	=	Z3G	=	OUT

NOTE: **The High-Set ground overcurrent (ITG) and phase overcurrent (ITP) are supervised by Forward Directional Ground unit (FDOG) and Forward Directional Phase unit (FDOP), respectively. In order to test the High-Set trip, the 3ϕ voltages are necessary as directional reference. The ITG and ITP will automatically become non-directional over- current units if the setting of LOPB is DIST, DIRU is ZSEQ or NSEQ and the LOP condition exists.**

For the setting of DIRU = DUAL and Ip > 1 amp., the ITG's directionality will be maintained and the FDOG is determined by Ip and 3I0 even if the LOP condition exists.

Step 21. Using Figure 6-1 (page 143), configuration #1, to connect currents and voltages, apply AG fault as shown in Step 1.1.3. The REL300 should trip at I_a = 5 Amps ± 5 % with a target of ITG-AG. For reversed fault, apply 10A reversed fault current (i.e., I_a leads Van by 135° for Y-connection, or 105° for T-connection). The relay should not trip.

Step 22. Using Figure 6-3 (page 145), to connect currents and voltages, apply AB fault as shown in Step 1.1.5. The REL300 should trip at Iab = 10 Amps ±5%, with a target

of ITP - AB. Apply a 15A reversed fault current (i.e., I_a leads V_{ab} by 135° for Y-connection or 105° for T-connection). The relay should not trip.

6.1.1.9 Ground Backup (GB) Test

Step 23. Use the SETTINGS mode and change the following settings:

- ITP = "OUT"
- ITG = "OUT"
- GBCV = CO-8
- GBPU = .5
- GDIR = "NO"
- GTC = 24

NOTE: **The note in Step 20 applies to the GB test. The GB can be set to directional ground overcurrent. For loss-of-potential condition, GB will be converted to non-directional, automatically for the setting of DIRU = ZSEQ or NSEQ. If the setting of DIRU is DUAL with the input Ip > 1amp., the GB's directionality will be maintained and the FDOG is determined by IP and 3I0.**

Using Figure 6-1 (page 143), apply A-G fault of 4.1A to REL300. Trip time is determined as follows:

$$(T_{MSEC}) = \left[478 + \frac{4122}{3I_0 - 1.27}\right]\frac{GTC}{24}$$

where $3I_0 = \dfrac{3I_{OF}}{GBPU}$

($3I_{OF}$ is zero sequence fault current.)

$$(T_{MSEC}) = \left[478 + \frac{4122}{4.1/0.5\ -1.27}\right]\frac{24}{24}$$

T_{MSEC} = 1073 msec

= 1.073 sec $\pm 5\%$ to trip

For values of $3I_0$ between 1.0 and 1.5, the following equation would apply:

$$(T_{MSEC}) = \frac{(9200)}{3I_0 - 1} \times \frac{GTC}{24}(CO-8 \text{ only})$$

The following equation can be used to calculate the trip time for all CO curves from CO-2 to CO-11:

T(sec) $= \left[T_0 + \frac{K}{(3I_0 - C)^P}\right] \times \frac{GTC}{24,000} \quad (for \;\; 3I_0 \geq 1.5)$

T(sec) $= \frac{R}{(3I_0 - 1)} \times \frac{GTC}{24,000} \quad (for \;\; 1 < 3I_0 < 1.5)$

where $3I_0 = \frac{3I_{OF}}{GBPU}$

GBPU = Pickup current setting (0.5 to 4.0A).

GTC = Time curve dial setting (1 to 63).

T_o, K, C, P and R are constants, and are shown in Table 6-2 (page 141).

Step 24. For a Zero Sequence Directional unit (DIRU = ZSEQ), the tripping direction of REL300 is: the angle of $3I_0$ leads $3V_0$ between +30° and +210°. Change the setting of GDIR to "YES". Apply AG fault as shown in preceding Step 10, Figure 6-1 (page 143). The relay should trip at the following angles:

- +28°
- -60° (± 88°)
- -148°

The relay should *not* trip at the angles of:

- +32°
- +120° (± 88°)
- -152°

For a Negative Sequence Directional Unit (DIRU = NSEQ), the tripping direction of REL300 is: I_2 leads V_2 by a value between +8° and +188°. The relay should trip at the following angles:

- +3°
- -82° (± 85°)
- -167°

The relay should not trip at the angles of:

- +13°
- +98° (± 85°)
- +183°

Step 25. For a dual polarizing ground directional unit (DIRU = DUAL) test, connect the test circuit shown in Figure 6-4; (page 146) apply Ip = 1.5 A $\angle -90°$ to terminals 12 (+) and 11(-), and apply a balanced 3-phase voltage (70V) to V_a, V_b, V_c, and V_n. Apply Ia = 4A to terminals 6(+) and 5(-).

NOTE: **Ip has to be greater than 1.0 ampere for the current polarization; otherwise it will be converted to zero sequence voltage polarization automatically.**

NOTE: **In order to eliminate the voltage polarizing effect, make sure the voltages are finely balanced so that $3V_0$ is less than 1.0 volt.**

The relay should trip at the following angles:

- -3°
- -90° (±87°)
- -177°

The relay should not trip at the following angles:

- +3°
- +90° (±87°)
- +177°

6.1.1.10 CIF, STUB, IOM, IL and LV Tests

Step 26. Set the relay per Table 6-1 (page 141). Change the following settings: IOM = 3, IL = 2, CIF = CF, and connect a rated dc voltage to 52b, between TB5/3 (+) and TB5/4 (-). Apply an AG fault as shown in Step 10 (Figure 6-1, page 143). The relay should trip at I_a = 2A (IL) with CIF target. Change IL setting from 2 to 3.5A and repeat the test shown in Step 26. The relay should trip at I_a = 3A (IOM) with CIF target. Change the setting CIF = CFT and Ia = 3.2A. Repeat the test. The relay should trip with a display of CIF and a time delay of 200 ms. (Refer to Section 3.4.7 (page 32) for the application of CFT setting.) Reset CIF = CF.

Step 27. LV setting test. Set LV = 60 and with I_{AN} = 4A, apply AG fault as shown in Step 10. The CIF trip should be for V_{AN} <60 Vrms ± 5%.

Step 28. For STUB Bus Protection (SBP), check the blue jumpers on the Interconnect module. JMP7 and 9 should be IN; JMP13 should be at the rated voltage position. Select CIF = STUB. Disconnect the voltage from 52b and connect it to terminals TB5/13(+) and TB5/14(-).

NOTE: **Make sure the jumpers (JMP8 and JMP10) are not IN before applying the voltage to TB5/13(+) and TB5/14(-).**

Apply I_A = 4A. The STUB bus trips for any V_{AN} voltage with a target of CIF. Disconnect the voltage from SBP and reset IOM = I_L = 0.5 and CIF = NO.

6.1.1.11 Load-Loss-Trip (LLT) and Loss-of-Potential (LOP) Tests

Step 29. For Load Loss Trip (LLT), set:

LLT	= Yes
Z2P	= Z2G = 4.5 ohms
T2P	= T2G = 2.99 sec (or BLK)
ZIP	= ZIG = OUT

Apply:

Va = 30 $\angle 0°$

Vb = 70 $\angle -120°$

Vc = 70$\angle 120°$

Ia = 3.5$\angle -75°$

Ib = 1$\angle -120°$

Ic = 1$\angle +120°$

Suddenly increase Ia from 3.5 to 4.5A and then turn I_b OFF immediately. The relay should trip with LLT target. The trip is accelerated due to the pickup of Zone 2 and the setting of LLT = YES.

Change the setting of LLT = FDOG and the input current Ia from 1.5 to 2.5A; then turn I_b OFF immediately. The relay should trip with a target of LLT. The trip is due to the pickup of FDOG and setting of LLT = FDOG.

Reset: LLT = NO

Z2P = Z2G = OUT

T2P = T2G = BLK

Step 30. Disconnect all current inputs. Connect 3 balanced voltages of 70 Vac to V_{an}, V_{bn}, and V_{cn}. Using the SETTINGS mode, change the setting: LOPB = DIST.

NOTE: **The "RELAY IN SERVICE" LED will not be turned "OFF" for the condition of setting LOPB = DIST, but Zone 1, 2, 3 and pilot distance units will be blocked and all overcurrent units (GB, ITP, and ITG) will be converted to non-directional operation.**

LOPB will be set if the following logic is satisfied:

- one (or more) input voltages (V_{AN}, V_{BN} or V_{CN}) are detected (as <7 Vrms) without ΔI change, **or**
- a 3Vo (> 7Vrms) is detected with 3Io <Ios
- Apply V_{AN}, V_{BN} and V_{CN} rated voltage to REL300. Scroll the LED to metering mode; the display shows LOPB = NO. Reduce VAN to 62 Vrms (e.g., $3V_0$ = 8V). After approximately 0.5 seconds, the display shows LOPB = YES and the form C failure alarm (AL1) contact is also deenergized.

Step 31. Set the relay as follows:

Z1P	=	4.5	GBCV	=	CO-8
Z1G	=	4.5	GBPU	=	0.5

ITP	=	10	GDIR	=	YES
ITG	=	5	GTC	=	24

Repeat Step 10. AG Fault) with I_{AN} = 4.5A. While in the metering mode, be sure that LOPB = YES before the fault current is applied. The relay should be tripped with a target of GB. Apply 5.5A; the relay should be tripped with a target of ITG. Repeat the test with a reversed AG Fault; the relay will trip. Reset LOPB = NO; the relay should not trip for the reversed fault. Set LOPB = ALL. The relay “In Service” LED will be turned off for the fault voltages applied and the relay will not trip for the forward or reverse fault current (4.5A).

Step 32. Set LOPB = DIST. Apply a balanced three-phase voltage (70 Vrms) and current (3A). Turn off Va; the relay should not trip. Reset LOPB to NO.

6.1.1.12 Loss-Of-Current (LOI) Test

Step 33. Set LOIB to YES and I_{OM} = 1.0A. Apply a balanced three-phase voltage (70 Vrms). Connect the current inputs per Figure 6-1 (page 143), and apply a single phase current of 1.1A to I_A. After approximately 10 seconds, the “Relay In Service” LED will be turned off, and the Form C failure alarm (AL1) contact will be dropped out (deenergized) indicating a failure condition.

Step 34. Increase I_A to 1.5A. Depress the DISPLAY SELECT push-button and change to the metering (VOLTS/AMPS/ANGLE) mode. Press FUNCTION RAISE push-button until the LOI display is shown. The value should indicate “YES”. Suddenly turn OFF V_A voltage; the relay should not be tripped within 500 ms. It may operate after 500 ms if a delta I is detected by the relay. Change the setting of LOIB from YES to NO.

6.1.1.13 Output Contact Test

Step 35. The purpose of this test is to check the hardware connections and relay contacts. It is designed for a bench test only. Remove JMP12 (spare on the Microprocessor PC Board) and place it in the JMP5 position. Open the red-handled FT switch (Trip and Breaker Failure Initiate) in order to avoid the undesired trip.

NOTE: The red-handled FT switch (#13) controls the dc supply of BFI, RI2 and the optional RI1 relays. In order to test these relays in the system, the external wiring should be disconnected to avoid undesired reclosing or trip. For relays without FT switches, *do not* perform the Output Contact tests using the relay system.

Change the LED mode to “TEST” and select the tripping function field and the desired contact in the value field. Push the ENTER button; the ENTER LED should be “ON”. The corresponding relay should operate when the ENTER button is pressed. The following contacts can be tested:

- TRIP
- BFI
- RI1 (optional)

- RI2
- RB
- AL1 (with three balanced voltages applied)
- AL2
- GS
- SEND
- STOP
- OC 1 TO OC8 (optional)

Remove JMP5 and replace it on JMP12.

6.1.1.14 Opto-Input Check

Step 36. Before applying the input voltages, check the jumper positions on the Inter-connect module for the rated voltage selection and check JMP7 and JMP9 for the STUB (SBP) input test.

Change the LED mode to “TEST” and select the function field to OPTI. Apply a rated voltage to TB5 appropriate terminals and a non-zero HEX value should be shown on the right-hand side display as follows:

Term (TB5)	Function (OPTI)	Value (HEX)
7(+), 8	RCVR-1 *	01
11(+), 12	RCVR-2 *	02
9(+), 10	PLT-ENA *	04
13(+), 14	SBP	08
1(+), 2	52a *	10
3(+), 4	52b	20
5(+), 6	EXT-RST	40

* Optional

This Completes the Opto-Input Hardware Test.

Step 37. This completes the basic Acceptance Test for the REL300 Non-Pilot system. (See subsequent segment for optional Single Pole Trip and Out-of-Step Block tests.)

6.1.2 Pilot Performance Tests

To prepare the REL300 relay assembly for Pilot Acceptance Tests, connect the REL300 per Figure 6-1 (page 143), Configuration 1.

NOTE: For Power Supply module sub 13 or higher, three Reed relays are used to replace the mercury relays for GS, Carrier STOP and SEND. Check jumpers JMP1 (STOP) and JMP2 (SEND) for NO or NC output contact selection.

6.1.2.1 Front Panel Check

Step 1. Repeat steps 1 thru 6 in Non-Pilot Acceptance Tests.

Step 2. Change the value settings, in Table 6-1 (page 141), as follows:

- PLT YES
- Z3FR REV
- ZIP OUT
- ZIG OUT
- PLTG 6.0
- PLTP 6.0
- Z3P 6.0
- Z3G 6.0
- T3P BLK
- T3G BLK
- PTRI YES

NOTE: When the dc voltage is applied to TB5 terminals, check jumper position on Interconnect module for the appropriate selection.

Connect a rated dc voltage to PLT/ENA terminals TB5/9(+) and TB5/10(-).

6.1.2.2 Blocking (BLK) Scheme

Step 3. Change the STYP setting to BLK. Apply a rated dc voltage to RCVR #1 terminals TB5/7(+) and TB5/8(-). Check the metering mode for RX1 = YES. Apply an AG fault as shown in Step 10 of the Non-Pilot Acceptance Test (i.e., V_a = 30 volts and I_a = 4 Amps). The trip A contacts should not be closed. The CARRY SEND should be “open” and the CARRY STOP should be “closed”.

Step 4. Remove the dc voltage from RCVR #1 and apply AG fault. Trip A and RI2 (TB3/5 & 6 and TB3/7 & 8) contacts should be “closed” and the target should show “PLTG AG”. Set PTRI = NO. Repeat the test and the RI2 should not be closed.

Change the LED mode to “TEST” and select the “RS1” function. Push the ENTER button; the ENTER LED should be “ON”. Repeat Step 4 with the ENTER button depressed. The relay should not trip.

Step 5. Apply AG reversed fault (i.e., I_a leads V_a by 105 degrees). The CARRY SEND contacts should be “closed” and the CARRY STOP contacts should be “open”. (I_a should be > 3A for the Zone 3 setting of 6 ohms.)

Step 6. Change the LED mode to TEST and select the function “TK”. Push the ENTER button; the ENTER LED should be “ON” and the CARRY SEND contacts should be closed.

Step 7. In order to determine setting accuracy (6 ohms), the forward directional ground unit must be disabled. Set FDGT = BLK. Repeat preceding Step 4 of the Pilot Acceptance Test, with a trip input current (I_a) of 3 Amps (± 5%).

Step 8. Set the Forward Directional Ground Timer (FDGT) from 0 to 15 cycles. Repeat Step 4 with I_a = 1.5 A. The relay should be tripped after the delay time of FDGT.

NOTE: The FDOG trip is determined by the IOM **setting. It trips if $3I_0$ >**IOM **and the forward ground directional unit picks up.**

Step 9. In order to perform the Breaker Failure Reclose Block Test, change the setting of FDGT = 0 and BFRB = NO. Repeat test Step 4; RB contacts (TB3/1 and TB3/2) should not close. Change BFRB to YES and repeat the test. The RB contacts should be closed with a time delay between 150 ms and 200 ms.

NOTE: **For Va = Vb = Vc = 0, Ia = Ib = Ic = 0, the setting of OSB = YES, WFEN = NO, and the input of 52b = OV, the carrier SEND contacts will be closed. This is not desirable, but occurs only on the test bench. If tested with the relay system, V = 0 and I = 0 mean that the 52b input is at a rated voltage which will stop the SEND signal.**

6.1.2.3 PUTT or POTT Schemes

Step 10. Change the setting to STYP = PUTT (for underreach scheme) or STYP = POTT (for overreach scheme). In order to determine setting accuracy (6 ohms), the forward directional ground unit must be disabled. Set FDGT = BLK. Apply a rated voltage to RCVR #1 terminals TB5/7(+) and TB5/8(-), and apply an AG fault as shown in Step 10 of the Non-Pilot Acceptance Test. The trip contact A should be closed at the input I_a = 3A (± 5%); the target should show “PLTG AG”, and the CARRY SEND contact should be “closed” for POTT setting. The RI2 should be “closed” if PTRI is set to “YES”. Do not test carry STOP for POTT and PUTT schemes.

Step 11. Apply a reversed AG fault (I_a leads V_a by 105°). The relay should not trip, and the CARRY SEND contact should stay “open”.

Step 12. Remove the voltage on RCVR #1. Apply a forward AG fault as shown in Step 10. The trip contacts should remain “open” for I_a = 5A.

Step 13. Change the LED mode to TEST and select the function “RS1”. Push the ENTER button; the ENTER LED should be “ON”. Repeat Step 12 with the ENTER button depressed. The relay should trip.

Step 14. Repeat steps 8 and 9 for FDGT and BFRB tests, by using Step 10 with Ia = 1.5 A.

6.1.2.4 Weakfeed Scheme

Step 15. This function is for POTT only. In addition to the setting changes in Step 2, change the following settings:

- STYP POTT
- WFEN YES
- Z3G 4.5
- Z3P 4.5
- Z3FR REV

Apply a rated voltage to PLT/ENA terminals TB5/9(+) and TB5/10(-), also RCVR #1 terminals TB5/7(+) and TB5/8(-).

With $V_{an} = V_{bn} = V_{cn}$ = 70 Vrms applied (as shown in Figure 6-1, page 143), the relay should operate normally.

NOTE: **Do not apply fault current.**

Turn V_{an} "OFF"; the relay should trip with a target of WFT, and the Carrier Send contact (TB4-1 and TB4-2) should close momentarily.

Apply a balanced 3-phase 70 Vrms and apply a reverse AG fault current of 5A (i.e., I_a leads V_{an} by 105 degrees). Turn V_{an} "OFF"; the relay should not trip, and the Carrier Send contact (TB4-1 and TB4-2) should stay open.

Step 16. This completes the basic Acceptance Test for the REL300 Pilot System. (See subsequent segments for optional Single Pole Trip test.)

6.1.3 Single Pole Trip (Option) Acceptance Tests

Step 1. Set relay per Table 6-1 (page 141). Check the 62T setting; it should be 5.000. For a Pilot System, change the setting to PLT = YES, and apply a rated dc voltage to Pilot Enable terminals TB5/9(+) and TB5/10(-). Also apply a rated voltage to RCVR #1 terminals TB5/7(+) and TB5/8(-) if the STYP = POTT or PUTT; set TTYP = SPR.

Apply AG fault as shown in this Section 6.1.1.3, Step 10. The Trip A contacts (2FT-14/1-2 and 3-4) should be closed. Repeat BG fault (for Trip B contact closures) and repeat CG-Fault (for Trip C contact closures).

6.1.3.1 Sound Phase Fault (SPF) and 62T Trip

Step 2. Apply a rated dc voltage to 52a terminals TB5/1(+) and TB5/2(-) and to 52b terminals TB5/3(+) and TB5/4(-). Connect a Westinghouse Lockout (WL) switch to the trip circuit.

Step 3. Apply a phase-to-phase fault (as shown in this section 6.1.1.5, Step 13). Turn the fault current "ON" and "OFF". The WL switch trips with a target of SPF.

Step 4. Set the WL switch, immediately; it will trip again with a target of 62T. Remove the voltages from 52a and 52b.

6.1.3.2 Reclose (RI) Trip and Breaker Failure (BFI) Contacts

Step 5. Refer to the Non-Pilot Acceptance Test for the single-phase-to-ground faults (Steps 10 and 11), and to the three-phase fault (Step 12). The fault current should be 20% greater than the calculated values for the tests in these steps. The "fault types" applied to the REL300 relay are shown in Table 6-2 (column 2, page 141). TTYP settings are shown in column 1, whereas the results of RI, Trip, and BFI contacts are shown in columns 3, 4, and 5, respectively.

6.1.4 REL300 With Out-of-step Block Option

Refer to Figure 6-5 (page 147). The RT setting (21BI) is for the inner blinder and it is also used for three-phase fault load restriction. The RU setting (21BO) is for the outer blinder. If the setting of OSB is "YES", and the power swing stays inside the two parallel lines (RT and RU) for more than 50 ms, the three-phase fault trip will be blocked until the timer (OSOT) times out.

Connect the test circuit as shown in Figure 6-2 (page 144).

6.1.4.1 Condition OSB = NO

Step 1. Set the relay per Table 6-1 (page 141), except for the following settings:

- Z1P = 10
- Z1G = 10
- Z2P = 20
- Z2G = 20
- T2P = 0.1
- T2G = 0.1

(Check: PANG = GANG = 75; RT = RU = 15; OSOT = 4000)

Step 2. Adjust the inputs as follows:

$$V_a = 40\angle 0° \qquad I_a = I_F\angle -45°$$

$$V_b = 40\angle -120° \qquad I_b = I_F\angle -165°$$

$$V_c = 40\angle 120° \qquad I_c = I_F\angle 75°$$

Step 3. Apply current I_F of 2.35A ±5% suddenly. The relay should trip with a display of Z2P = ABC.

Step 4. Apply I_F of 4.7A ± 5% suddenly. The relay should trip with a display of Z1P = ABC.

Step 5. Change the RT setting from 15 to 4. Repeat Steps 3 and 4 (above). The relay should not trip because the RT restricts the 3-phase fault current.

NOTE: The trip current (I_F) can be obtained from the equation in test Step 12 (6.1.1.4, page 124 Zone 1 Test/Three-Phase), with the parameters:

VLN = 40 PANG = 75

Z1P = 10 (or Z2P = 20) X = 45

6.1.4.2 Condition OSB = YES

Change the OSB setting from NO to YES and RT = 4, RU = 8.

Step 1. Change the LED to metering mode with the display of OSB = NO.

Step 2. Apply a current I_F of 2.7A ± 5% suddenly. The display should show OSB = YES for 4 seconds. This means the input power swing is inside the outer blinder (2IBO). Repeat this test for I_F = 4A and 4.5A. The display should show OSB = YES because the power swing is within two blinders (2IBO and 2IBI).

Step 3. Apply a current of 4.5A and increase the I_F to 5.5A immediately. The relay should trip with a display of Z2P = ABC (or Z1P = ABC). This means the power swing stays inside the blinders for more than 50 ms and then crosses over 21BI. For the current of 4.5A, Z1P or Z2P may pick up, but the relay trips after the OSOT timer times out.

Step 4. Apply I_F of 5.25A suddenly (5% above the calculated value). The relay should trip with a display Z1P = ABC. The trip time should be <2 cycles.

TABLE 6-1: PRESENT REL300 SETTINGS (PILOT SYSTEM) - V2.2X

VERS	0		Z3P	OUT
OSC	TRIP		T3P	2.00
FDAT	TRIP		Z3G	OUT
CTR	1000		T3G	2.50
VTR	2000		Z3FR	FWD
FREQ	60		PANG	75
CTYP	5		GANG	75
RP	NO		ZR	3.0
XPUD	.5		LV	60
DTYP	KM		IL	0.5
TTYP	OFF		IM	1.0
62T	5.000*		IOS	0.5
PTRI	YES		IOM	1.0
Z1RI	YES		ITP	OUT
Z2RI	NO		ITG	OUT
Z3RI	NO		OSB	NO
BFRB	NO		OSOT	4000
PLT	NO		RT	15.00
STYP	3ZNP		RU	15.00
FDGT	0		DIRU	ZSEQ
WFEN	NO		GBCV	OUT
3TRM	NO		GBPU	0.5
BLKT	0		GTC	24
PLTP	OUT	* For Single Pole Trip option only.	GDIR	YES
PLTG	6.00		CIF	OUT
Z1P	4.5		LLT	NO
Z1G	4.5		LOPB	NO
T1	0		LOIB	NO
Z2P	OUT		AL2S	NO
T2P	1.00		SETR	YES
Z2G	OUT		TIME	NO
T2G	1.50			

NOTE: **This REL300 settings table is for 60 Hz and 5A ct systems. For 1A ct, change PLT, PLG, Z1P, Z1G, Z2P, Z2G, Z3P, Z3G, RT, RU by multiplying a factor of 5, and all current values mentioned in the text should be multiplied by a factor of 0.02.**

TABLE 6-2: TRIP TIME CONSTANTS FOR CO CURVES

curve #	T_0	K	C	P	R
CO2	111.99	735.00	0.675	1	501
CO5	8196.67	13768.94	1.13	1	22705
CO6	784.52	671.01	1.19	1	1475
CO7	524.84	3120.56	0.08	1	2491
CO8	477.84	4122.08	1.27	1	9200
CO9	310.01	2756.06	1.35	1	9342
CO11	110.	17640.00	0.5	2	8875

TABLE 6-3: FAULT TYPES APPLIED TO REL300

Setting TTYP	Fault Type Applied	Out Contacts RI	TRIP	BFI
OFF	AG	NO	A,B,C	A,B,C
	BG	NO	A,B,C	A,B,C
	CG	NO	A,B,C	A,B,C
	ABC	NO	A,B,C	A,B,C
1PR	AG	RI2	A,B,C	A,B,C
	AB	NO	A,B,C	A,B,C
	ABC	NO	A,B,C	A,B,C
2PR	AG	RI2	A,B,C	A,B,C
	AB	RI2	A,B,C	A,B,C
	ABC	NO	A,B,C	A,B,C
3PR	AG	RI2	A,B,C	A,B,C
	BG	RI2	A,B,C	A,B,C
	CG	RI2	A,B,C	A,B,C
	AB	RI2	A,B,C	A,B,C
	ABC	RI2	A,B,C	A,B,C
SPR	AG	RI1	A	A
	BG	RI1	B	B
	CG	RI1	C	C
	ABC	NO	A,B,C	A,B,C
SR3R	AG	RI1	A	A
	BG	RI1	B	B
	CG	RI1	C	C
	ABC	RI2	A,B,C	A,B,C

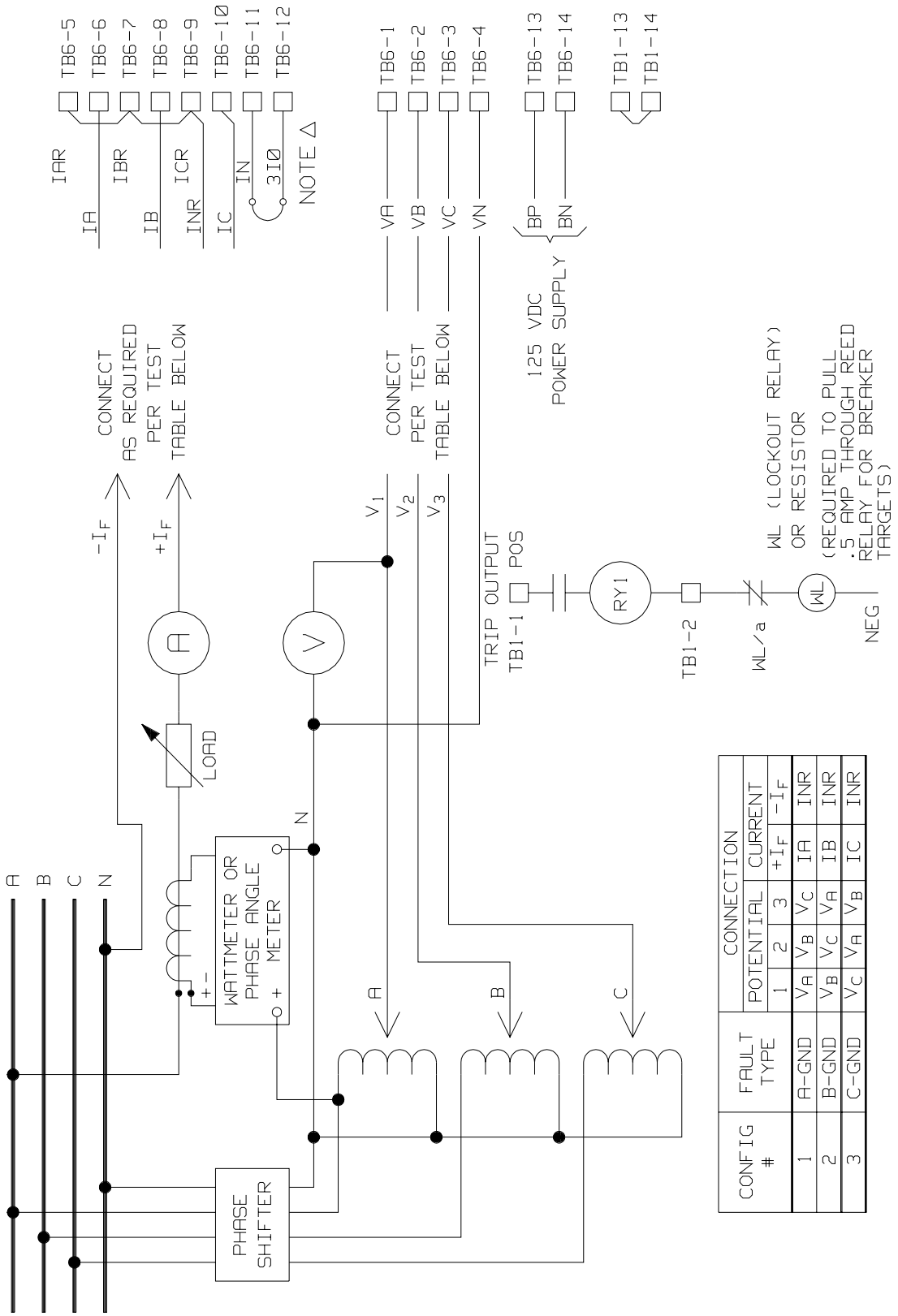

CONFIG #	FAULT TYPE	CONNECTION				
		POTENTIAL			CURRENT	
		1	2	3	$+I_F$	$-I_F$
1	A-GND	V_A	V_B	V_C	IA	INR
2	B-GND	V_B	V_C	V_A	IB	INR
3	C-GND	V_C	V_A	V_B	IC	INR

Sub 1
1502B51
(Sheet 1 of 4)

Figure 6-1 Test Connection for Single-Phase-to-Ground Faults

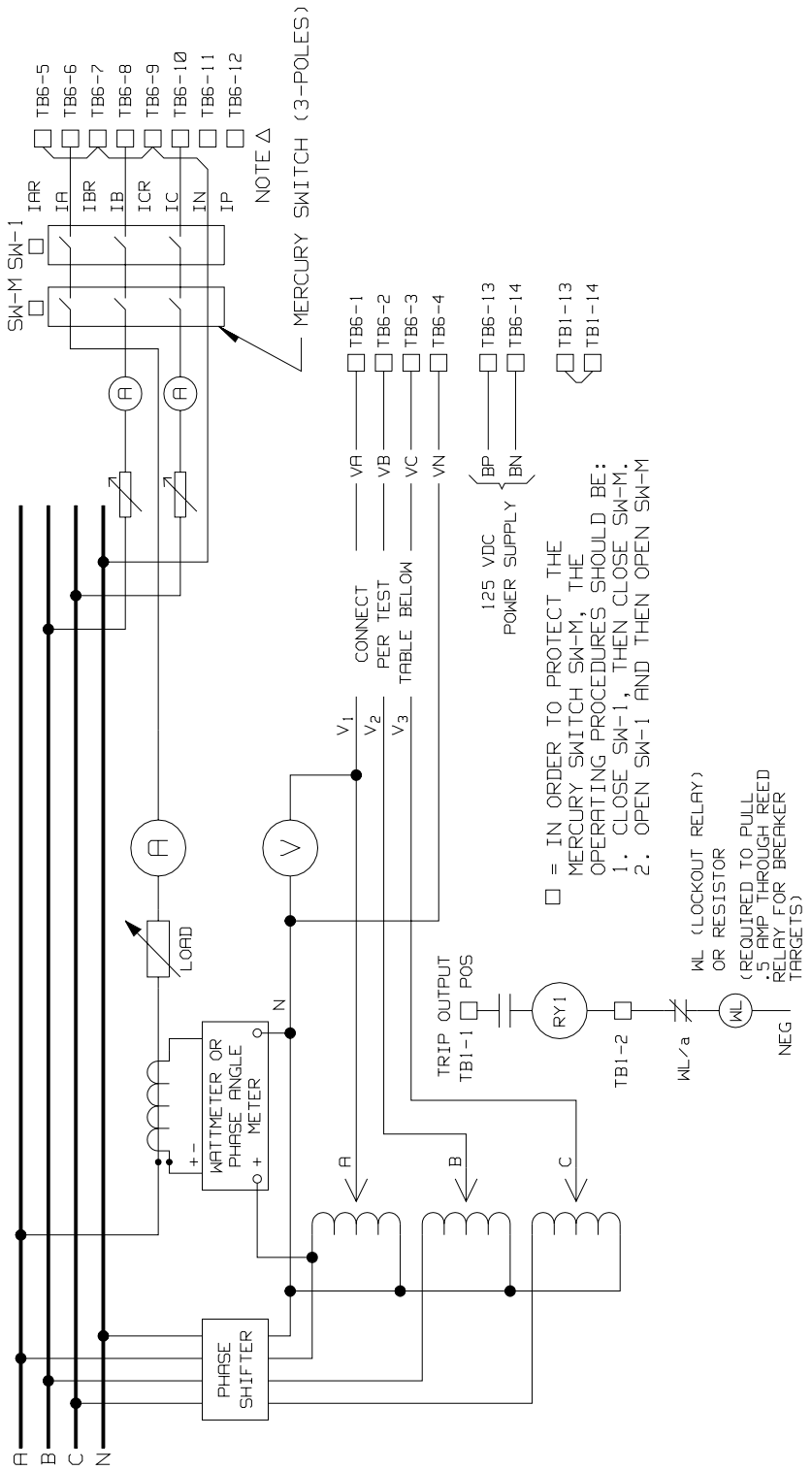

Sub 1
1502B51
(Sheet 2 of 4)

Figure 6-2 Test Connection for Three-Phase Faults

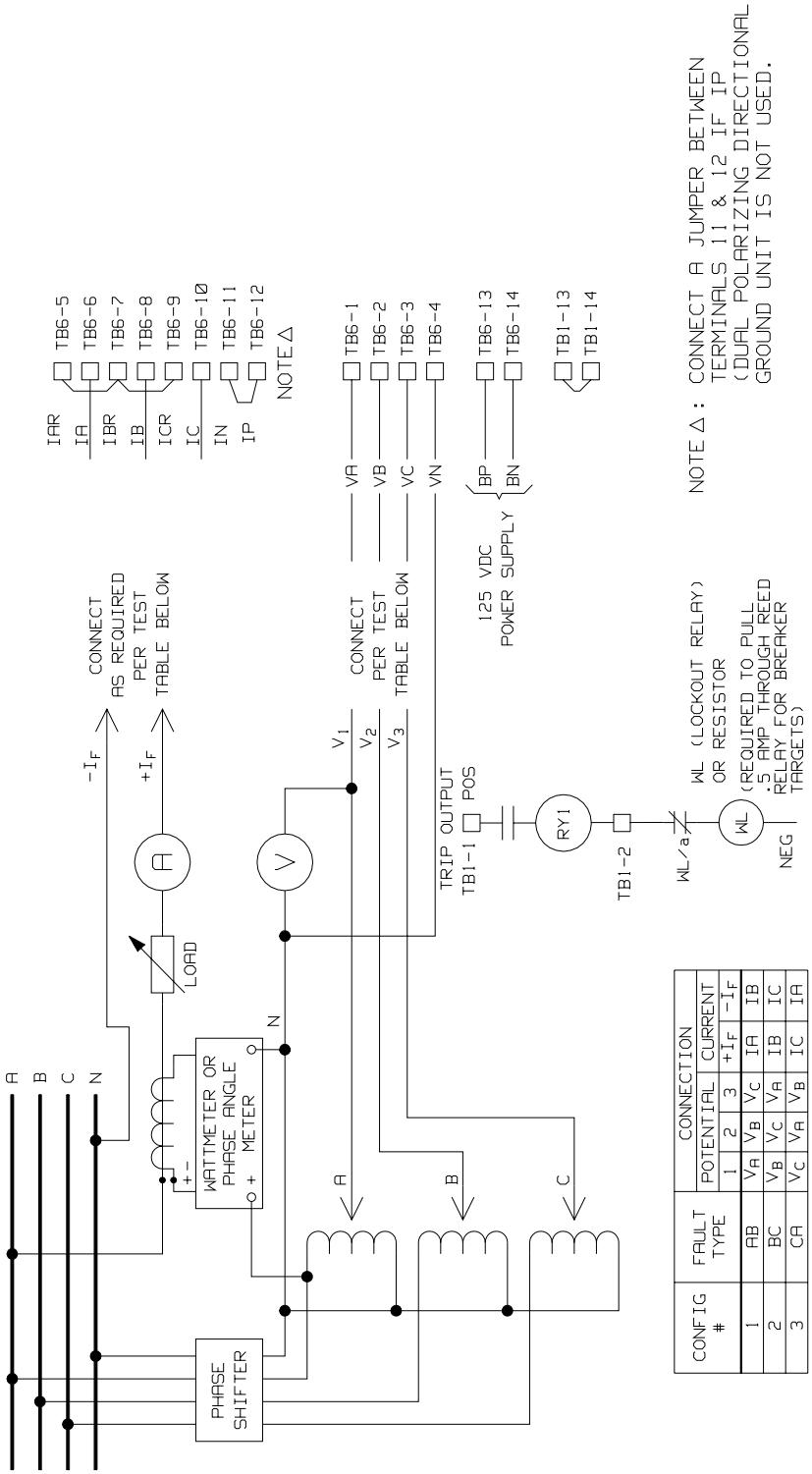

CONFIG #	FAULT TYPE	CONNECTION			
		POTENTIAL			CURRENT
		1	2	3	$+I_F$	$-I_F$
1	AB	V_A	V_B	V_C	IA	IB
2	BC	V_B	V_C	V_A	IB	IC
3	CA	V_C	V_A	V_B	IC	IA

Sub 1
1502B51
(Sheet 3 of 4)

Figure 6-3 Test Connection for Phase-to-Phase Faults

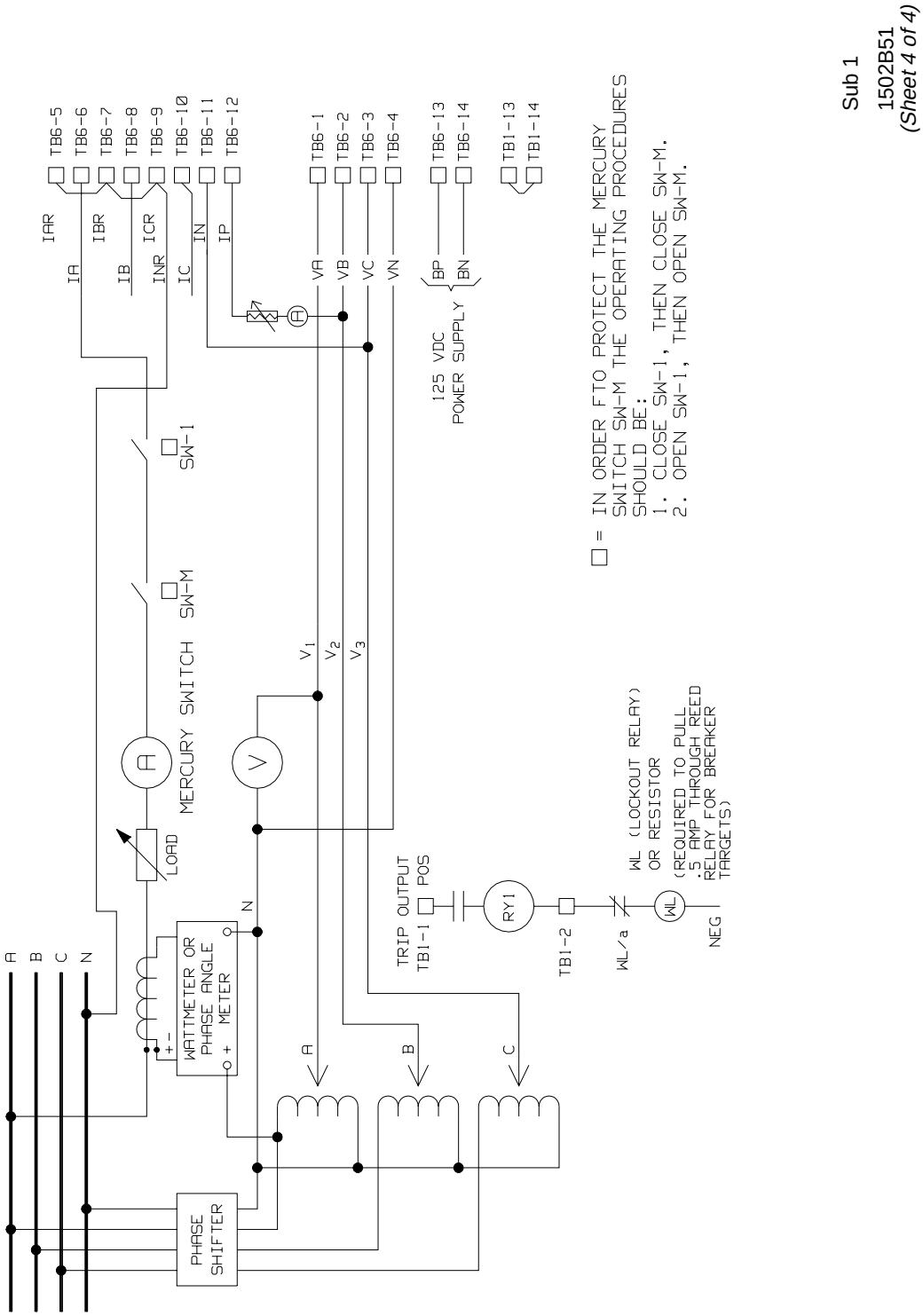

Figure 6-4 Test Connection for Dual Polarizing Ground Directional Unit

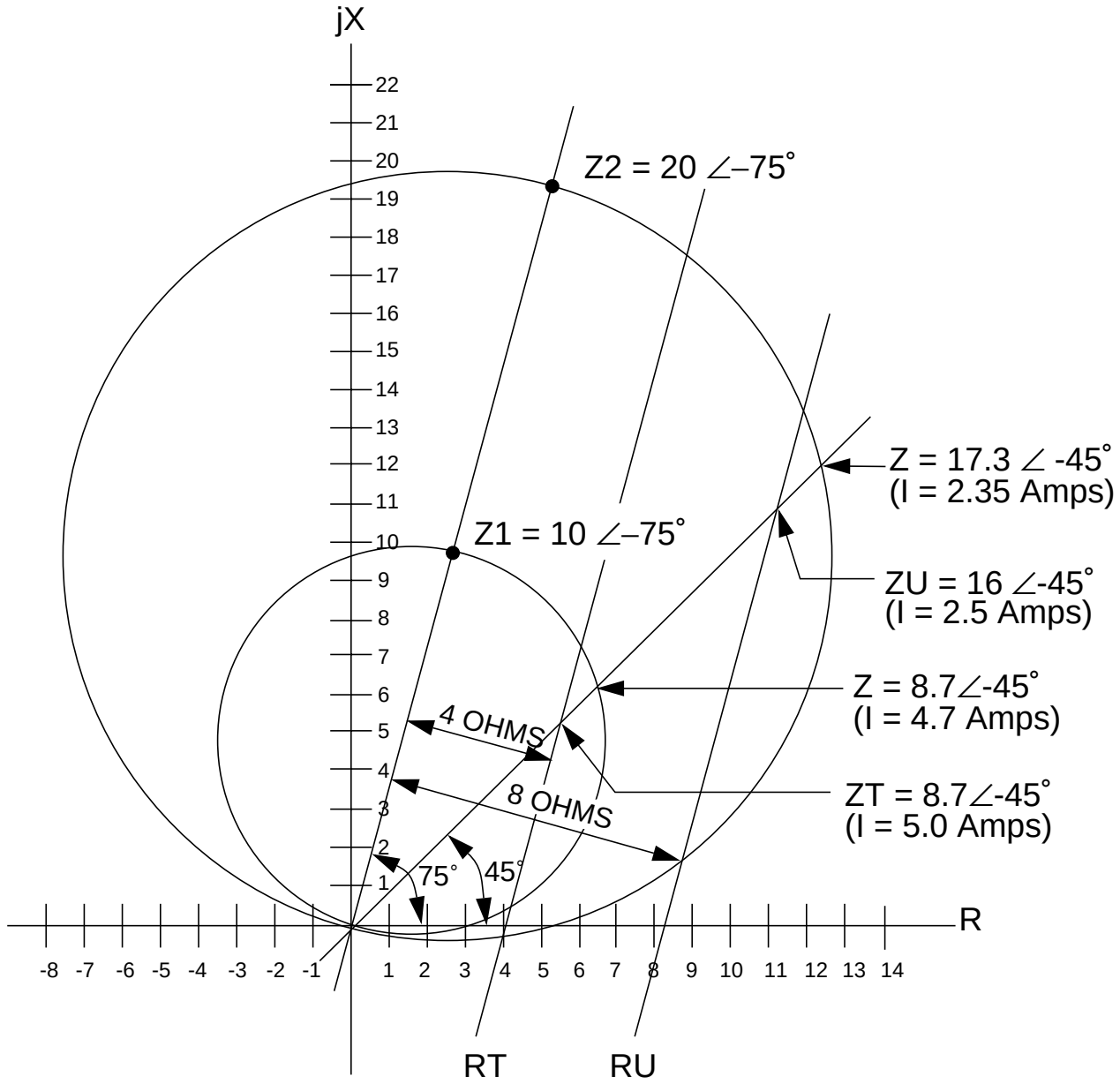

INPUTS: Va = 40 ∠0°, Vb = 40 ∠-120°, Vc = 40 ∠120°
SETTINGS: PANG = 75°, GANG = 75°, ZR = 3
ABC FAULT WITH FAULT ANGLE OF 45°

Sub 1
9651A71

Figure 6-5 REL300 with Out-of-Step Block Optior

THIS PAGE RESERVED FOR NOTES

Section 7. ACCEPTANCE/MAINTENANCE TESTS

Maintenance qualification tests will determine if a particular REL300 unit is working correctly. ***Refer to the WARNING note in Section 6.1 (page 119) before energizing the relay.***

7.1 NON-PILOT MAINTENANCE TESTS

It is recommended that either Doble or Multi-Amp test equipment should be used for this test. Refer to Figure 6-1, (page 141) for the input voltage and current terminal connection per configuration 1. Check all jumper positions on the Interconnect module for rated dc voltage.

7.1.1 Front Panel and Metering Check

Step 1. Turn on rated dc voltage. Check the FREQ setting; it should match the line frequency and ct type (CTYP). Apply a balanced 3-phase voltage (70 Vac); the Alarm 1 relay should be energized. (Terminal TB4/7 and TB4/8 should be zero ohms.) The “Relay-in-Service” LED should be “ON”.

Step 2. Press RESET push-button; the green LED (Volts/Amps/Angle) should be “ON”. Press the FUNCTION RAISE or FUNCTION LOWER push-button. Read the input voltages and their angles:

V_{AG} = 70 ∠0°
V_{BG} = 70 ∠–120°
V_{CG} = 70 ∠120°

with an error of ± 1 volt and ± 2°.

Step 3. Press the DISPLAY SELECT push-button, and note that the mode LED cycles thru the five display modes. Release the push-button so that the SETTINGS mode LED is “ON”. Press the RAISE button to scroll thru the FUNCTION FIELD to check the settings per Table 6-1 (page 139). Change the setting, if necessary, by depressing the RAISE button in the VALUE FIELD to the desired value and then pressing the ENTER button. The Value Excepted LED should be lit to confirm the new data entry.

Step 4. Press the RESET push-button (LED jumps to Metering mode). Apply 3.0 A to I_A with an angle of -75°. Read I_A from the front display; it should be 3.0 ∠–75° with an error of 5% and ± 2°. Move the input current from IA to IB or IC terminal. Read I_B or I_C to verify the transformer’s accuracy.

7.1.2 Impedance Accuracy Check

Step 5. Apply voltages to REL300 as follows:

V_A = 30 ∠0°
V_B = 70 ∠-120°
V_C = 70 ∠120°

Apply forward fault current I_A ∠-75° suddenly. The relay should trip for I_A = 4A ± 5%. The display should show “Z1G AG”.

Repeat for B and C phases per the following table:

Phase B			Phase C		
V_A	=	70 ∠120°	V_A	=	70 ∠-120°
V_B	=	30 ∠0°	V_B	=	70 ∠120°
V_C	=	70 ∠-120°	V_C	=	30 ∠0°
I_B	=	4 ∠-75°	I_C	=	4 ∠-75°

7.1.3 Input Transformer (I_P) Check

Step 6. Change the settings from Table 6-1, page 139 (or Table 6-3, page 140) as follows:

ZIP	=	OUT
ZIG	=	OUT
DIRU	=	DUAL
GBCV	=	CO-8
GBPU	=	0.5
GDIR	=	YES
GTC	=	24

For a dual polarizing ground directional unit (DIRU = DUAL) test, connect the test circuit shown in Figure 6-4 (page 144). Apply I_P = 1.5 A ∠–90° to terminals 12(+) and 11(-), and apply a balanced 3-phase voltage (70 Vac) to Va, Vb, Vc, and Vn. Apply Ia = 4A to terminals 6 (+) and 5 (-). The relay should trip at the following angles:

- -3°
- -90° (± 87°)
- -177°

The relay should *not* trip at the following angles:

- +3°
- +90° (± 87°)
- +177°

Change the settings back to Table 6-1, page 139.

7.1.4 OPTO-Input Check

Step 7. Before applying the input voltages, check the jumper positions on the Inter-connect module for the rated voltage selections and check JMP7 and JMP9 for the STUB (SBP) input test. On the Microprocessor module, remove JMP12 (spare) and place it in the JMP5 position.

Change the LED mode to “TEST” and select the function field to OPTI. Apply a rated voltage to TB5 appropriate terminals and a non-zero HEX value should be shown on the right-hand side display as follows:

Term (TB5)	Function (OPTI)	Value (HEX)
7(+), 8 *	RCVR-1	01
11(+), 12 *	RCVR-2	02
9(+), 10 *	PLT-ENA	04
13(+), 14	SBP	08
1(+), 2 *	52a	10
3(+), 4	52b	20
5(+), 6	EXT-RST	40
* Optional		

THIS COMPLETES THE OPTO INPUT HARDWARE CHECK.

7.1.5 Output Contact Test

Step 8. The purpose of this test is to check the hardware connections and relay contacts. It is designed for a bench test only. Remove JMP12 (spare on the Microprocessor PC Board) and place it in the JMP 5 position.

Change the LED mode to “TEST” and select the tripping function field and the desired contact in the value field. Push the ENTER button; the ENTER LED should be “ON”. The corresponding relay should operate when the ENTER button is pressed. The following contacts can be tested:

- TRIP
- BFI
- RI1 (optional)
- RI2
- RB
- AL1 (with 3 balanced voltages)
- AL2
- GS
- SEND (optional)
- STOP (optional)
- OC 1 to OC8 (Optional)

Remove JMP 5 and place it in JMP12.

7.2 PILOT MAINTENANCE TEST

Connect the REL300 per Figure 6-1 (page 141), Configuration 1.

7.2.1 Basic Function Test

Step 1. Repeat Step 1 thru 8 in the Non-Pilot Maintenance Test (7.1.1 thru 7.1.5).

7.2.2 Input Opto-Coupler Check

The following test steps 2 and 3 are optional since the OPTO inputs PLT-ENA, RCVR-1 and RCVR-2 have been checked in Section 7.1.4.

Step 2. PLT ENA Terminals
Change the following settings from Table 6-1 (page 139):

- PLTYES
- Z1P0UT
- Z1GOUT
- PLTPOUT
- PLTG6.0
- Z3POUT
- Z3G6.0
- T3PBLK
- T3GBLK
- Z3FR1REV

a. Block Systems Only
Change the STYP setting to BLK. Apply a forward fault, as shown in the Non-Pilot Maintenance Test, step 5. The relay should not trip.

Apply a rated dc voltage to PLT ENA terminals TB 5/9(+) and TB 5/10(-). Repeat the test. The relay should trip.

b. POTT/PUTT Systems Only
Change the STYP setting to POTT. Change the LED mode to TEST and select the function “RS1”. Push the ENTER button; the LED should be “ON”. Apply a forward fault as shown in Non-Pilot Maintenance test, Step 5. With the ENTER button depressed, the relay should not trip. Apply a rated dc voltage to terminals TB 5/9(+) and TB 5/10(-). Repeat the test. The relay should trip.

Step 3. Receivers 1 and 2
Apply a dc voltage to PLT ENA terminals TB 5/9(+) and TB5/10(-).

a. Block Systems Only
Change the STYP setting to BLK. Apply a forward fault as shown in the Non-Pilot Maintenance test, Step 5. The relay should trip.

Apply a rated dc voltage to RCVR #1 terminals TB 5/7 (+) and TB 5/8(-). Repeat the test. The relay should not trip. Move the dc voltage from RCVR #1 to RCVR #2 terminals TB 5/11(+) and TB 5/12(-), and repeat this test for RCVR #2.

b. POTT/PUTT Systems Only
Change the STYP setting to POTT. Apply a forward fault as shown in the Non-Pilot Maintenance test, Step 5. The relay should not trip. Apply a rated dc voltage to RCVR #1 terminals TB 5/7(+) and TB 5/8(-). Repeat the test. The relay should trip.

Move the dc voltage from RCVR #1 to RCVR #2 terminals TB 5/11(+) and TB 5/12(-), and repeat this test for RCVR #2.

7.3 SINGLE-POLE TRIP TEST

7.3.1 Output Contact Test

Step 1. Set relay according to Table 6-1 (page 139). Check the 62T setting; it should be 5.000.

For a Pilot system, change the PLT setting to YES, and apply rated dc voltage to Pilot enable terminals TB 5/9(+) and TB 5/10(-). Also, apply a rated voltage to RCVR #1 terminals TB 5/7(+) and TB 5/8(-) if the STYP = POTT or PUTT; set TTYP = SPR.

Step 2. Repeat Non-Pilot Maintenance test, step 5 for trip and BFI. Check the contact closures for Trip A, Trip B, Trip C and BFIA, BFIB, BFIC.

7.3.2 Input Opto-Coupler Check

The following test step 3 is optional since the OPTO input 52a has been checked in Section 7.1.4.

Step 3. 52a Terminals
Apply a rated voltage to 52b terminals TB 5/3(+) and TB 5/4(-) and then apply a rated voltage to 52a terminals TB 5/1(+) and TB 5/2(-). The relay should trip in 5 seconds with a display of 62T.

THIS PAGE RESERVED FOR NOTES

INDEX TO NOMENCLATURE

Numerics — Page Number

1PR 3-Pole Trip, Reclosing On Single-phase-to-ground Faults 16, 38, 79, 120, 123, 125
21BI Inner Blinder For Out-of-step Application 39, 40, 80, 115
21BO Outer Blinder For Out-of-step Application 39, 40, 116, 145
21NP Pilot Ground Distance Relay 118
21P Pilot Distance Relay 118
2PR 3-Pole Trip, Reclosing On All Faults Except 3ϕ Faults 16, 79, 120, 123, 125
3PR 3-Pole Trip, Reclosing On All Faults 16, 79,120, 123, 125
3PRN 3-Pole Reclose Enable For TTYP setting of 1PR or 2PR or 3PR or SR3R 38
3PT 3-Pole Trip. 16, 79, 123
3RI 3-Pole Reclose Supervision Caused By Any Type Of Tripping 100, 123
3TRM Three Terminal Application 121, 147
3ZNP 3 Zone Non-pilot System. 29, 31, 120
52a Normally-open Circuit Breaker, Auxiliary Contact Input 2, 3, 29, 84, 90
52b Normally-closed Circuit Breaker, Auxiliary Contact Input 2, 3, 35, 84, 90
62T Single Phasing Limit Timer Setting For SPT Application 16, 41, 118, 120

A

AG Phase A-to-Ground Fault 80
AL1 Alarm 1 for internal failure check or LOP/LOI 33, 84, 89
AL2 Alarm 2 (trip alarm) 84, 89, 90
AL2S Trip Alarm Seal-In 123

B

BFI Breaker Failure Initiate 1, 3, 29, 84, 89, 90
BFIB Breaker Failure Initiate for Phase B for SPT option 153
BFRB Breaker Failure Reclose Block for local and remote RB 120
BG Phase B-to-Ground Fault 80
BLK Blocking system type 46, 47, 50, 80, 120, 121
BLKT Channel coordination timer setting in blocking system (in ms) 46, 118

C

CF Setting for CIF without Timer 34
CFT Setting for CIF with Timer 34, 35
CG Phase C-to-Ground Fault 80
CIF Close-Into-Fault 2, 25, 31, 34, 35, 113, 122
CIFT Close-Into-Fault with Timer 35, 80, 122
CR Carrier Receiver. 44, 50
CT Current Transformer. 33, 37, 122
CTR Current Transformer Ratio setting. 111,119,
CTYP Current Transformer type setting (1A or 5A ct) 119, 122

D

DIRU Directional control type (ZSEQ/NSEQ/DUAL) for FDOG & RDOG . . .32, 117, 122
DTYP Distance unit selected for XPUD setting (KM or MI) 15, 120
DUAL Dual (V or I) Zero Sequence Polarizing Unit for FDOG or RDOG . . .32, 117, 122
ΔVΔI Delta V and Delta I - Line Disturbance 94

E

EEPROM Electrically Erasable Programmable Read Only Memory 3, 89, 90
EPROM Erasable Programmable Read Only Memory 3, 6

F

FANG Fault angle 120
FDAT Fault Data Initiation 87, 94, 119
FDGT Forward Directional Ground Timer 15, 16, 80, 121
FDOG Forward Directional Overcurrent Ground Unit determined by setting of DIR. 6, 30, 31, 34, 35, 114, 123
FDOP Forward Directional Overcurrent Phase Unit. 30
FREQ Frequency Setting Selected (50Hz or 60Hz). 119
FTYP REL300 fault type 102, 103

G

GANG Zero sequence line impedance angle setting 99, 107, 108, 117, 118, 123, 128, 139, 141, 147
GB Ground backup trip target 32, 80, 116, 116, 121, 122, 123
GBCV Ground backup curve selection 32, 116, 117
GBPU Ground backup pickup multiplier setting 32, 116, 117
GS General Start for External Record 3, 89
GTC Ground backup time dial setting 32, 116, 117

H

HST High Speed Trip (Zone 1, PLT, ITP & ITG) 29, 30, 31, 32, 34

I

I_F Fault current 126, 127, 139,140
I_L Low-level phase current pickup value setting (Amp). 14, 113, 122
I_M Median set phase current 15, 114, 122
INCOM INtegrated COMmunication Network providing 2-way serial 84
I_{OM} Median set ground current (3I0) pickup value setting (Amp). 14, 15, 30, 31, 33, 34, 35, 37, 80, 114, 122
IOS Low set ground current (3I0) pickup value setting (Amp) 14, 15, 114
ITG Instantaneous ground (3I0) trip setting or trip target 14, 33, 34, 80, 114
ITP Instantaneous phase trip setting or trip target 14, 33, 34, 80, 114, 121, 122, 123

L

LLT Load Loss Trip 2, 80, 123
LOI Loss of Current - 3I0 and not 3V0 . . . . . 14, 33
LOIB Loss of Current Block of tripping 33, 123
LOP Loss of Potential - 3V0 and not 3I0 . . . . . 14, 32, 33, 34, 80
LOPB Loss of Potential Block of tripping 32, 33, 34, 35, 123
LP Pre-fault load angle 102
LV Low voltage pickup setting for CIF and weakfeed application 14, 34, 120, 122

N

NOVRAM Non-volatile read-write memory . . . . . .
NSEQ Negative Sequence Quantity (V2 & I2) 32, 117, 122

O

OFF	3-Pole trip, no reclosing	38
OS	Out-of-Step	40
OPTI	Opto Input for Input Test	135, 151
OSB	Enable/Disable out-of-step blocking	16, 17, 29, 40, 80, 114, 115, 118
OSC	Oscillographic data	94, 119
OSOT	Out-of-step block override timer (ms)	118

P

PANG	Positive sequence line impedance angle setting	39, 40, 99, 107, 108, 111, 117, 118, 123, 124, 126, 128, 139, 141, 147
PFAIL	Power Supply Failure	
PFLC	Pre-fault load current	
PFLV	Pre-fault load voltage	
PLT/ENA	Pilot enable (external switch)	
PLTG	Pilot ground distance setting (ohms)	34, 35, 80, 113, 121, 122
PLTP	Pilot phase distance setting (ohms)	34, 80, 113, 121, 122
PONI	Product Operated Network Interface	2, 17
POTT	Permissive Overreaching Transfer Trip	80, 120, 121
PROM	Programmable Read Only Memory	3
PSME	Power Supply Monitor Enable	
PT	Potential Transformer	
PTRI	Pilot Reclose Initiate for 3-pole Reclose RI2	120, 123
PUTT	Permissive Underreaching Transfer Trip	120, 121

R

RAM	Random Access Memory	6, 7, 89, 90
RB	Reclose Block	3, 16, 35, 38, 39, 84, 89, 120
RCVR	Receiver (external voltage or switch)	80
RDOG	Reverse Direction Overcurrent Ground determined by the setting of DIRU (ZSEQ/NSEQ/DUAL)[	30, 31, 34
REED B-1	Reed relay B-1 for trip seal-in	
REM	Remote	
RI	Reclose Initiate	3, 16, 84, 120
RI1	Reclose Initiate-1 for Single-Pole Reclose	16, 38, 79, 89, 123, 125
RI2	Reclose Initiate-2 for 3-Pole Reclose	16, 38, 79, 89, 123, 125
ROM	Read-Only-Memory	
RP	Enable readouts in primary values	87, 119
RS1	Test function for simulating receipt of receiver 1 input	89
RS2	Test function for simulating receipt of receiver 2 input	
RT	Inner blinder setting (ohms) for 3-phase load restriction	16, 40, 114
RU	Outer blinder setting (ohms) for out-of-step option	17, 40, 114
RX1	Pilot channel receiver #1 input, same as RCVR#1	90
RX2	Pilot channel receiver #2 input, same as RCVR#2	90

S

SBP	Stub bus protection (89b)	1, 3, 34, 84, 90, 122
SCF	Stub Bus with standard Close-into-fault	34, 122
SCFT	Stub Bus with CIF and Timer	34, 122

SEND Carrier send output 80, 84
SET Enable/Disable Remote/Local Setting . . . . . .
SETR Enable INCOM remote setting capability. 123
SPF Sound phase fault trip . . . . . .
SPR Single-pole and 3-pole trip, single-pole reclosing only 16, 79, 120, 123
SPT Single-Pole Trip for single-pole application 16, 40, 41, 79, 120, 122, 123
SR3R Single-pole and 3-pole trip, reclosing for all faults 79, 123, 125
SRI Single-phase Reclose Initiate, Same as RI-1 123
STOP Carrier Stop Signal . . . . . .
STUB Stub Bus Protection same as SBP (89b). 34
STYP System type setting (3ZNP, Z1E, POTT, PUTT, BLK) 29, 31

T

T1 Zone 1 delay trip timer . . . . . .
T2G Zone 2 ground timer delay setting (seconds) 30, 117, 118, 121
T2P Zone 2 phase timer delay setting (seconds) 30, 117, 118, 121
T3G Zone 3 Ground Timer 31, 118, 121
T3P Zone 3 Phase Timer 31, 118, 121
TBM Transient Block Memory 80
TK Transmitter Keying . . . . . .
TRIP Trip Action 89, 118, 119
TRSL Trip Seal-in Trip signal and seal-in if trip current presented 29, 31, 38, 80
TTYP Trip Type, and reclose selection (1PR, 2PR, 3PR, etc.) 16, 120, 123

U

UBLK Unblock . . . . . .
VBFI Power Supply voltage to Breaker Failure Initiate. . . . . .

V

VLN Line-to-neutral voltage 13
VTR Voltage Transformer Ratio 111, 119

W

WFEN Weakfeed Enable 3.8.3, 3.20
WFT Weakfeed Trip 80

X

XPUD Primary Reactance ohms per unit distance 119, 120

Z

Z1E Zone 1 Extension 31, 32, 120
Z1G Zone 1 Ground 30, 31, 112, 114, 122
Z1P Zone 1 Phase 28, 29, 30, 31, 32, 33, 80, 112, 121, 122
Z2G Zone 2 Ground 30, 34, 80, 113, 121, 122
Z2P Zone 2 Phase 28, 30, 33, 80, 113, 121, 122
Z2RI Zone 2 Reclose Initiate. 120, 123
Z2T Zone 2 Timer 21, 32
Z2TR Zone 2 pickup or trip for OSC and target data 87, 94, 118, 119
Z2Z3 Zone 2 or Zone 3 Pickup or trip for OSC and target data 118, 119
Z3FR Zone 3 Forward/Reverse Setting. 21, 32, 121

Z3G	Zone 3 Ground	31, 34, 80, 113, 114, 121
Z3P	Zone 3 Phase	28, 31, 33, 80, 113, 121, 122
Z3RI	Zone 3 Reclose Initiate	120, 123
Z3T	Zone 3 Timer	31
ZR	Ratio of zero and positive sequence impedances	121
ZSEQ	Zero Sequence Quantity (3V0 & 3I0)	32, 117, 122

THIS PAGE RESERVED FOR NOTES

System Diagrams

Drawing Title		Page No.
Figure SD-1:	REL300 Block Diagram V2.23	161
Figure SD-2a:	REL300 System Logic Diagram (Sheet 1 of 3) V2.23	162
Figure SD-2b:	REL300 System Logic Diagram (Sheet 2 of 3) V2.23	163
Figure SD-2c:	REL300 System Logic Diagram (Sheet 3 of 3) V2.23	164

THIS PAGE RESERVED FOR NOTES

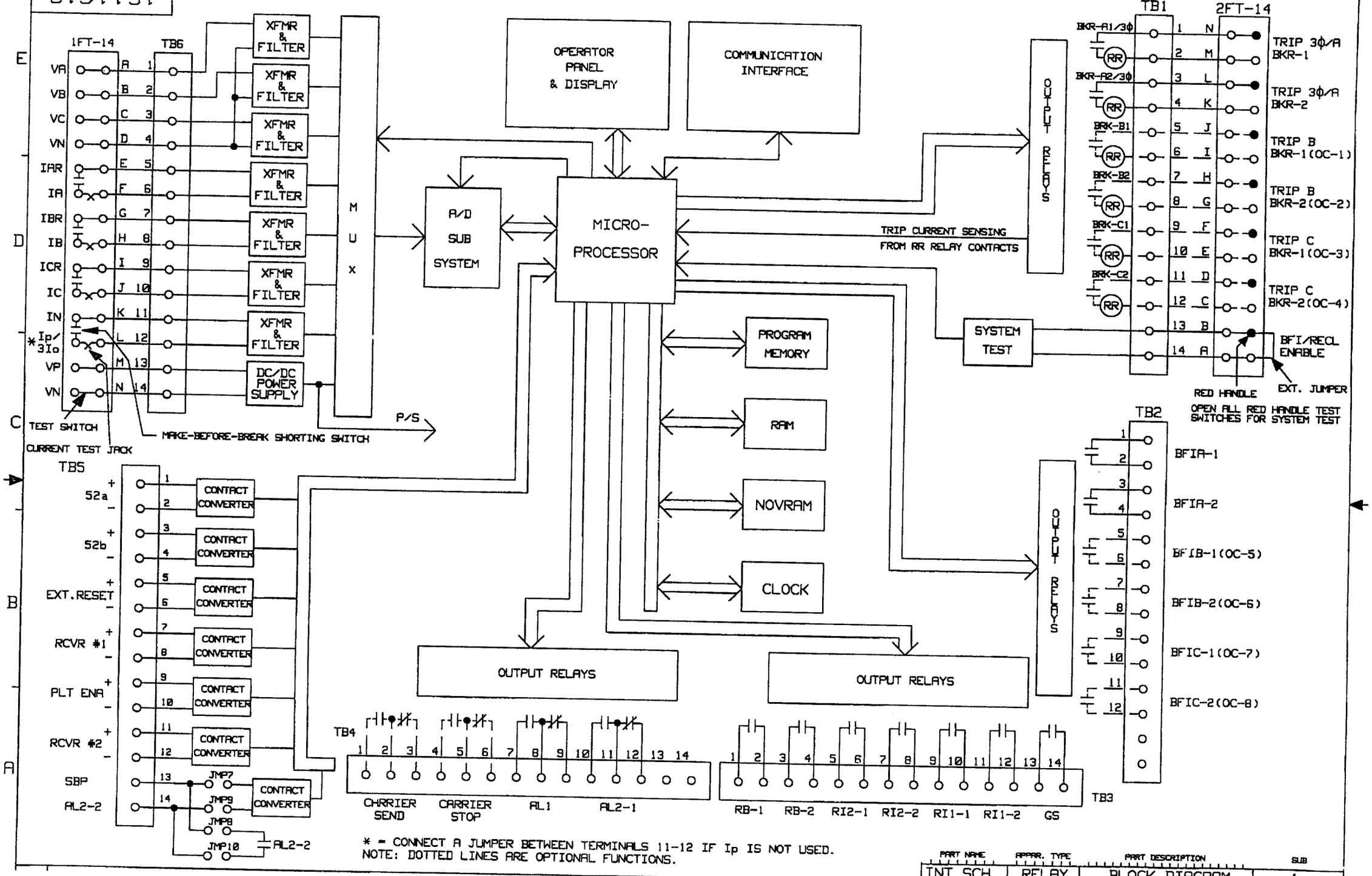
1FT-14
TB6
VA
VB
VC
VN
IAR
IA
IBR
IB
ICR
IC
IN
*Ip/3Io
VP
VN
TEST SWITCH
CURRENT TEST JACK
MAKE-BEFORE-BREAK SHORTING SWITCH
XFMR & FILTER
DC/DC POWER SUPPLY
P/S
MUX
A/D SUB SYSTEM
OPERATOR PANEL & DISPLAY
COMMUNICATION INTERFACE
MICRO-PROCESSOR
PROGRAM MEMORY
RAM
NOVRAM
CLOCK
OUTPUT RELAYS
TRIP CURRENT SENSING FROM RR RELAY CONTACTS
SYSTEM TEST
TB1
2FT-14
BKR-A1/3Φ
BKR-A2/3Φ
BRK-B1
BRK-B2
BRK-C1
BRK-C2
RR
TRIP 3Φ/A BKR-1
TRIP 3Φ/A BKR-2
TRIP B BKR-1(OC-1)
TRIP B BKR-2(OC-2)
TRIP C BKR-1(OC-3)
TRIP C BKR-2(OC-4)
BFI/RECL ENABLE
RED HANDLE
EXT. JUMPER
OPEN ALL RED HANDLE TEST SWITCHES FOR SYSTEM TEST
TB2
BFIA-1
BFIA-2
BFIB-1(OC-5)
BFIB-2(OC-6)
BFIC-1(OC-7)
BFIC-2(OC-8)
TB5
52a
52b
EXT.RESET
RCVR #1
PLT ENA
RCVR #2
SBP
AL2-2
CONTACT CONVERTER
JMP7
JMP9
JMP8
JMP10
TB4
CARRIER SEND
CARRIER STOP
AL1
AL2-1
TB3
RB-1
RB-2
RI2-1
RI2-2
RI1-1
RI1-2
GS
* = CONNECT A JUMPER BETWEEN TERMINALS 11-12 IF Ip IS NOT USED.
NOTE: DOTTED LINES ARE OPTIONAL FUNCTIONS.
PART NAME
APPAR. TYPE
PART DESCRIPTION
SUB
INT SCH
RELAY
BLOCK DIAGRAM
1

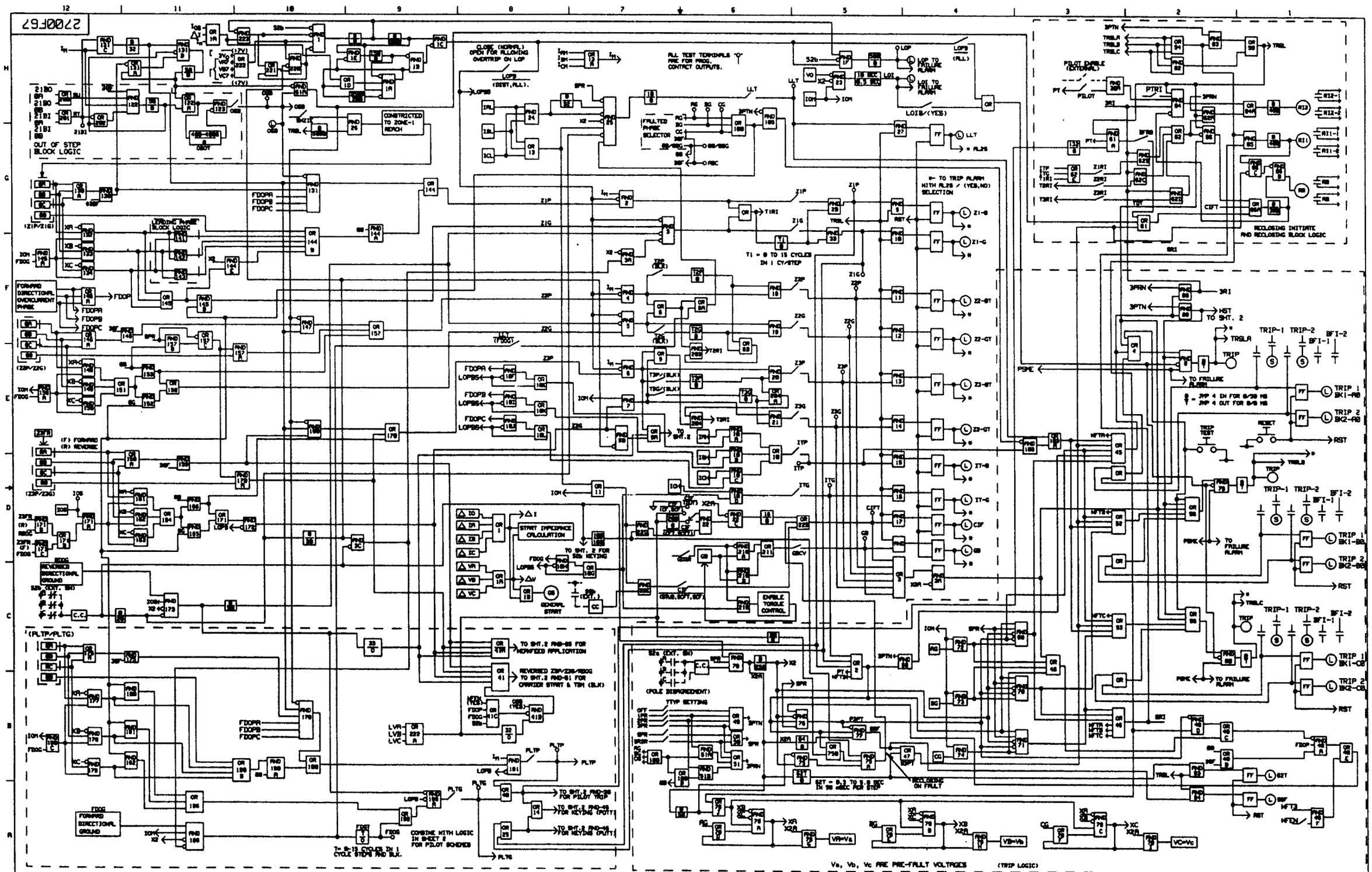
OUT OF STEP BLOCK LOGIC
CLOSE (NORMAL) OPEN FOR ALLOWING OVERTRIP ON LOP
ALL TEST TERMINALS "Y" ARE FOR PROG. CONTACT OUTPUTS.
CONSTRICTED TO ZONE-1 REACH
FORWARD DIRECTIONAL OVERCURRENT PHASE
REVERSED DIRECTIONAL GROUND
FDOG FORWARD DIRECTIONAL GROUND
START IMPEDANCE CALCULATION
ENABLE TORQUE CONTROL
TO TRIP ALARM WITH ALRS / (YES,NO) SELECTION
PILOT ENABLE (OPTIONAL)
RECLOSING INITIATE AND RECLOSING BLOCK LOGIC
TRIP-1 TRIP-2 BFI-1 BFI-2
TO FAILURE ALARM
RECLOSING ON FAULT
COMBINE WITH LOGIC IN SHEET 2 FOR PILOT SCHEMES
Va, Vb, Vc ARE PRE-FAULT VOLTAGES (TRIP LOGIC)

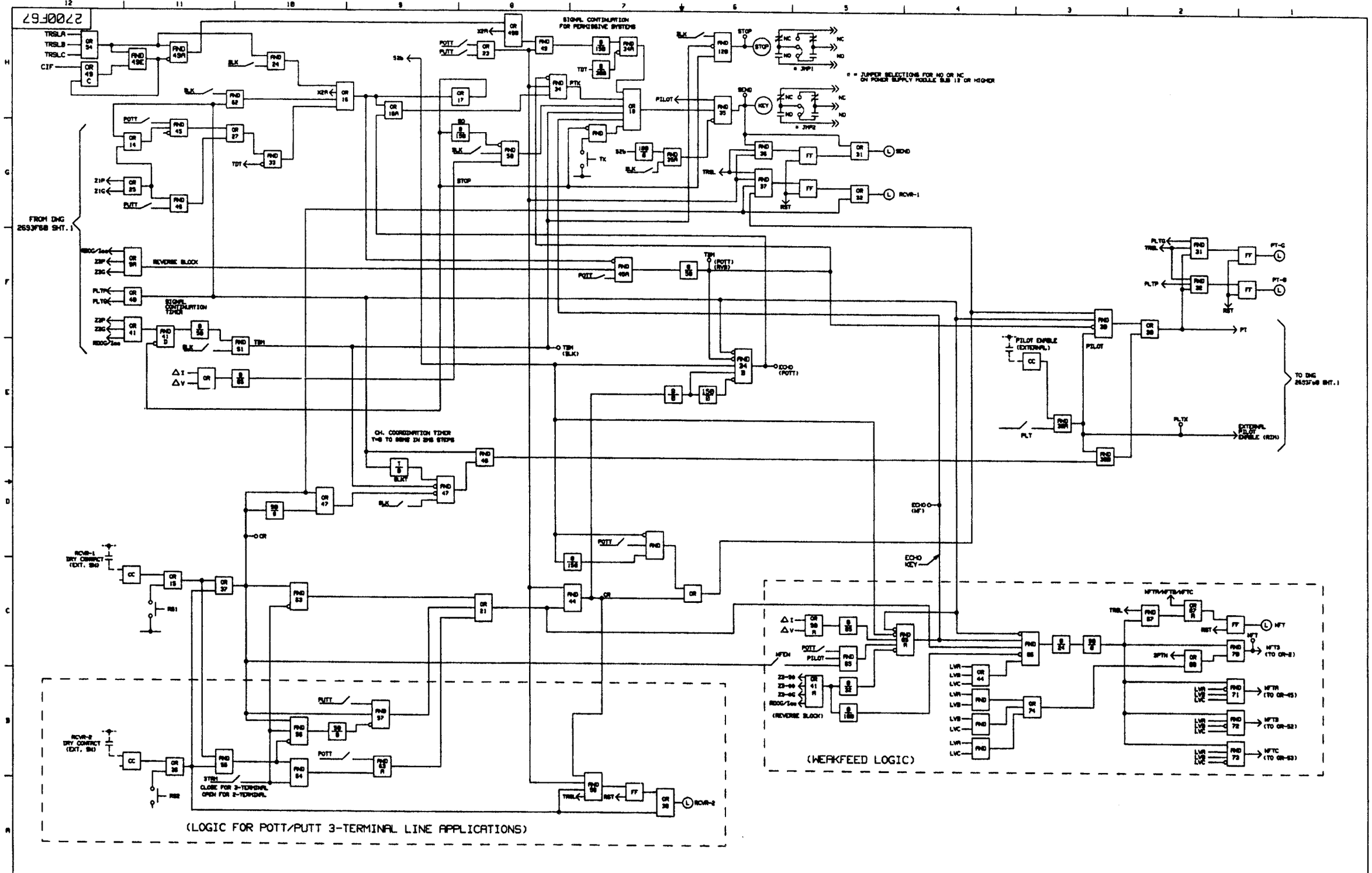
2700F67
TRSLA
TRSLB
TRSLC
CIF
FROM DWG 2693F68 SHT.1
SIGNAL CONTINUATION FOR PERMISSIVE SYSTEMS
* = JUMPER SELECTIONS FOR NO OR NC ON POWER SUPPLY MODULE SUB 12 OR HIGHER
REVERSE BLOCK
SIGNAL CONTINUATION TIMER
CH. COORDINATION TIMER T=0 TO 80MS IN 2MS STEPS
PILOT ENABLE (EXTERNAL)
TO DWG 2693F68 SHT.1
EXTERNAL PILOT ENABLE (RIN)
RCVR-1 DRY CONTACT (EXT. SW)
RCVR-2 DRY CONTACT (EXT. SW)
CLOSE FOR 3-TERMINAL OPEN FOR 2-TERMINAL
(LOGIC FOR POTT/PUTT 3-TERMINAL LINE APPLICATIONS)
(WEAKFEED LOGIC)

2700F67

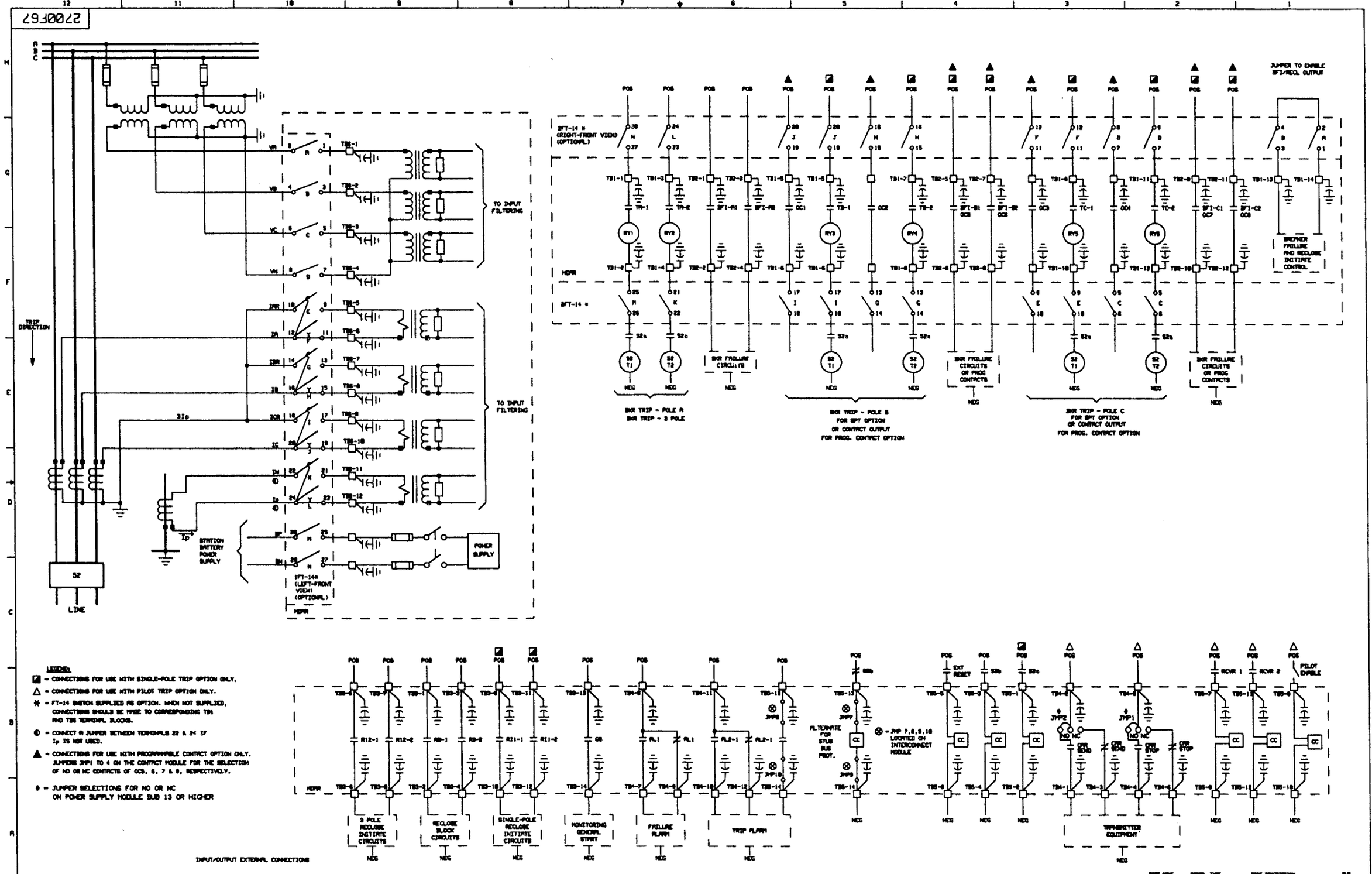

LEGEND:

- ◪ = CONNECTIONS FOR USE WITH SINGLE-POLE TRIP OPTION ONLY.
- △ = CONNECTIONS FOR USE WITH PILOT TRIP OPTION ONLY.
- ✳ = FT-14 SWITCH SUPPLIED AS OPTION. WHEN NOT SUPPLIED, CONNECTIONS SHOULD BE MADE TO CORRESPONDING TB1 AND TB2 TERMINAL BLOCKS.
- ⊗ = CONNECT A JUMPER BETWEEN TERMINALS 22 & 24 IF Ip IS NOT USED.
- ▲ = CONNECTIONS FOR USE WITH PROGRAMMABLE CONTACT OPTION ONLY. JUMPERS JMP1 TO 4 ON THE CONTACT MODULE FOR THE SELECTION OF NO OR NC CONTACTS OF OC5, 6, 7 & 8, RESPECTIVELY.
- ϕ = JUMPER SELECTIONS FOR NO OR NC ON POWER SUPPLY MODULE SUB 13 OR HIGHER