UPS INSTALLATION DRAWINGS

MegaFlex

1000 to 1600 kW UL S1

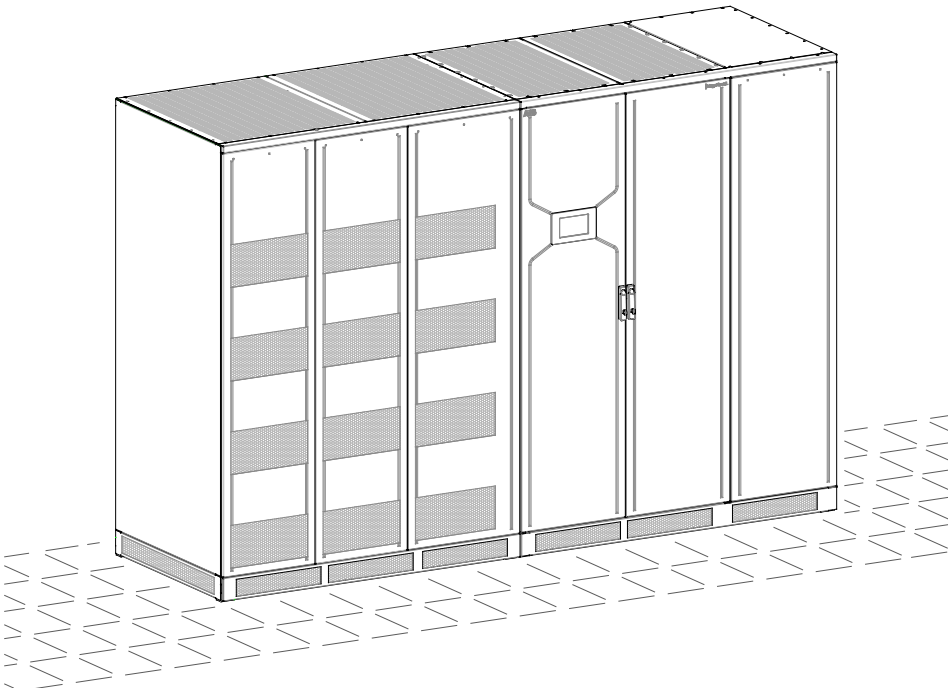

Model	**MegaFlex 1000 – 1100 – 1200 – 1500 – 1600 kW UL S1**
Issued by	ABB Product Document Department – Quartino - CH
Approved by	ABB R&D Department – Riazzino - CH
Date of issue	07/15/2020
File name	ABB_UPS_IDW_ MGF_SUL_1M0_1M6_1US_REV-A
Revision	REV-A
Document number	4NWD005512
Article number	4NWP106816R0001

Up-dating

Revision	Concern	Date

Copyright © 2020 by ABB Power Protection SA

All rights reserved.

The information contained in this publication is intended solely for the purposes indicated.

The present publication and any other documentation supplied with the UPS system is not to be reproduced, either in part or in its entirety, without the prior written consent of ABB.

The illustrations and plans describing the equipment are intended as general reference only and are not necessarily complete in every detail.

The content of this publication may be subject to modification without prior notice.

UPS Installation Drawings

Drawing title	**Drawing number**		
Dimensions Sheet	DEH0036280	page	1/7
Dimensions Sheet	DEH0036280	page	2/7
Dimensions Sheet	DEH0036280	page	3/7
Connection details	DEH0036280	page	4/7
Dimensions Sheet	DEH0036280	page	5/7
Mounting proposal	DEH0036280	page	6/7
Ventilation	DEH0036280	page	7/7

FRONT VIEW

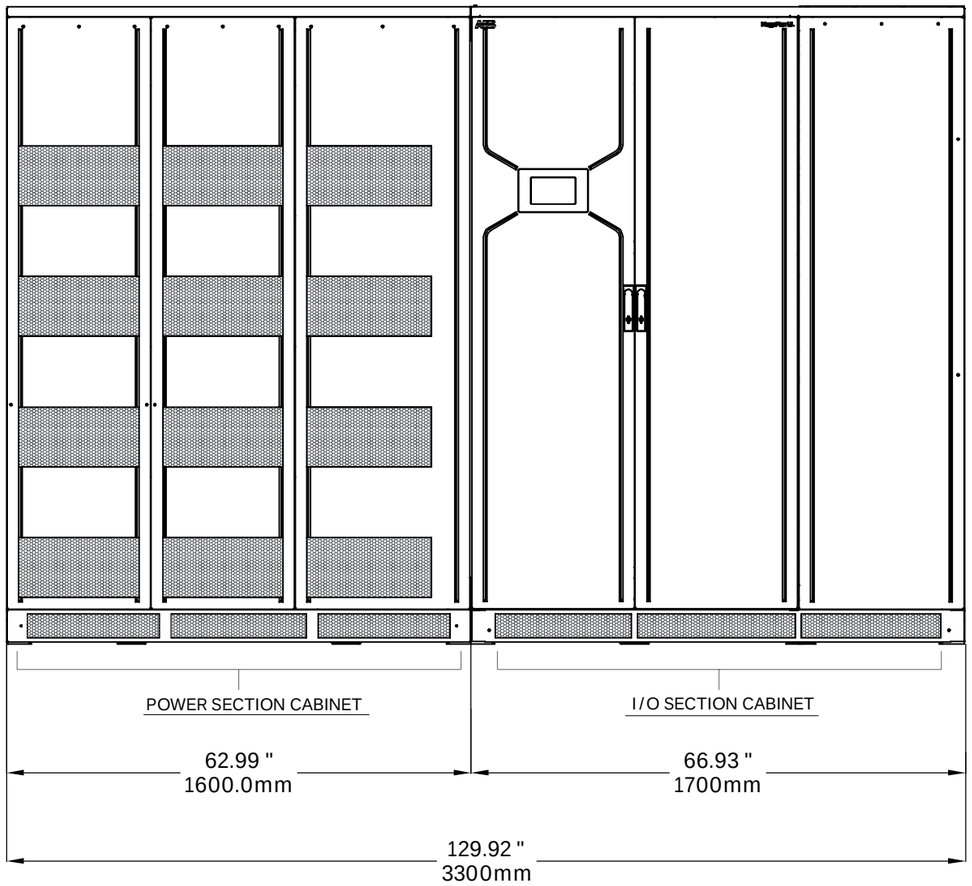

LEFT SIDE VIEW

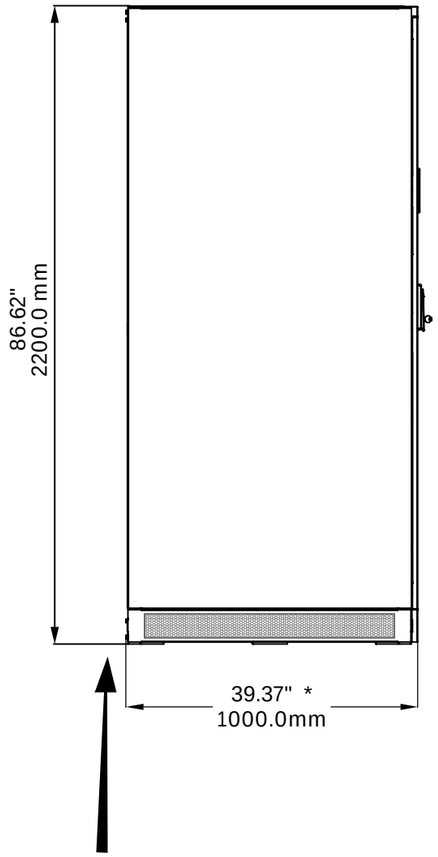

* For Seismic installation allow additional 3" (76mm) spacing at rear of the UPS to accomodate anchoring when placing against the wall.

TOP VIEW

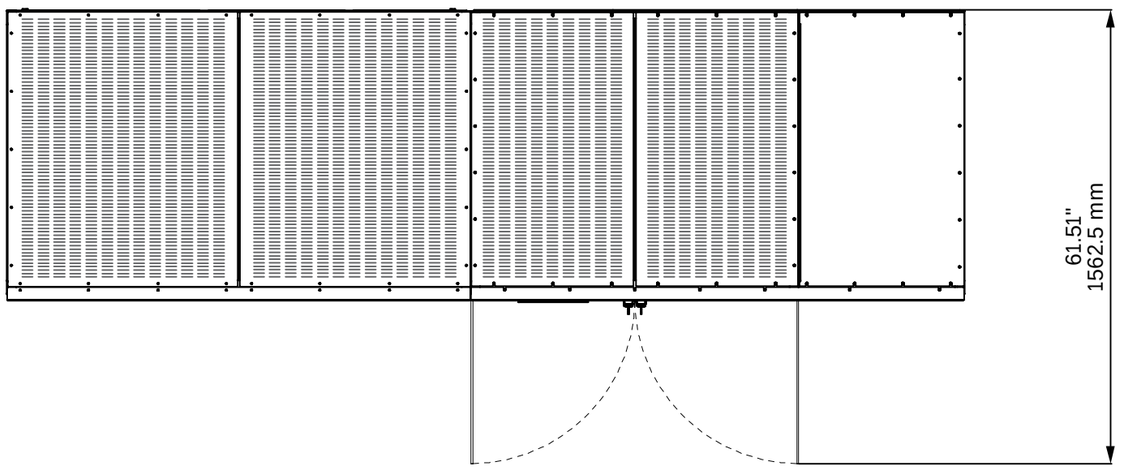

				Date	04-06-2020
				Des.	Barbarani R.
				Date	
Condit.	Revision	Date	Name	Contr.	

DIMENSION-SHEET
MASSBLATT
DIMENSIONI D'INGOMBRO
DIMENSIONS-ENCOMBREMENT

ABB
Electrification Products Industrial Solution

MegaFlex UL
1000 to 1600 kW

REPLACE

SERIES S1

DEH0036280

Pag. 1
7 Pag.

COMMON UTILITY CONNECTION

Power Connection with Common Input Utility

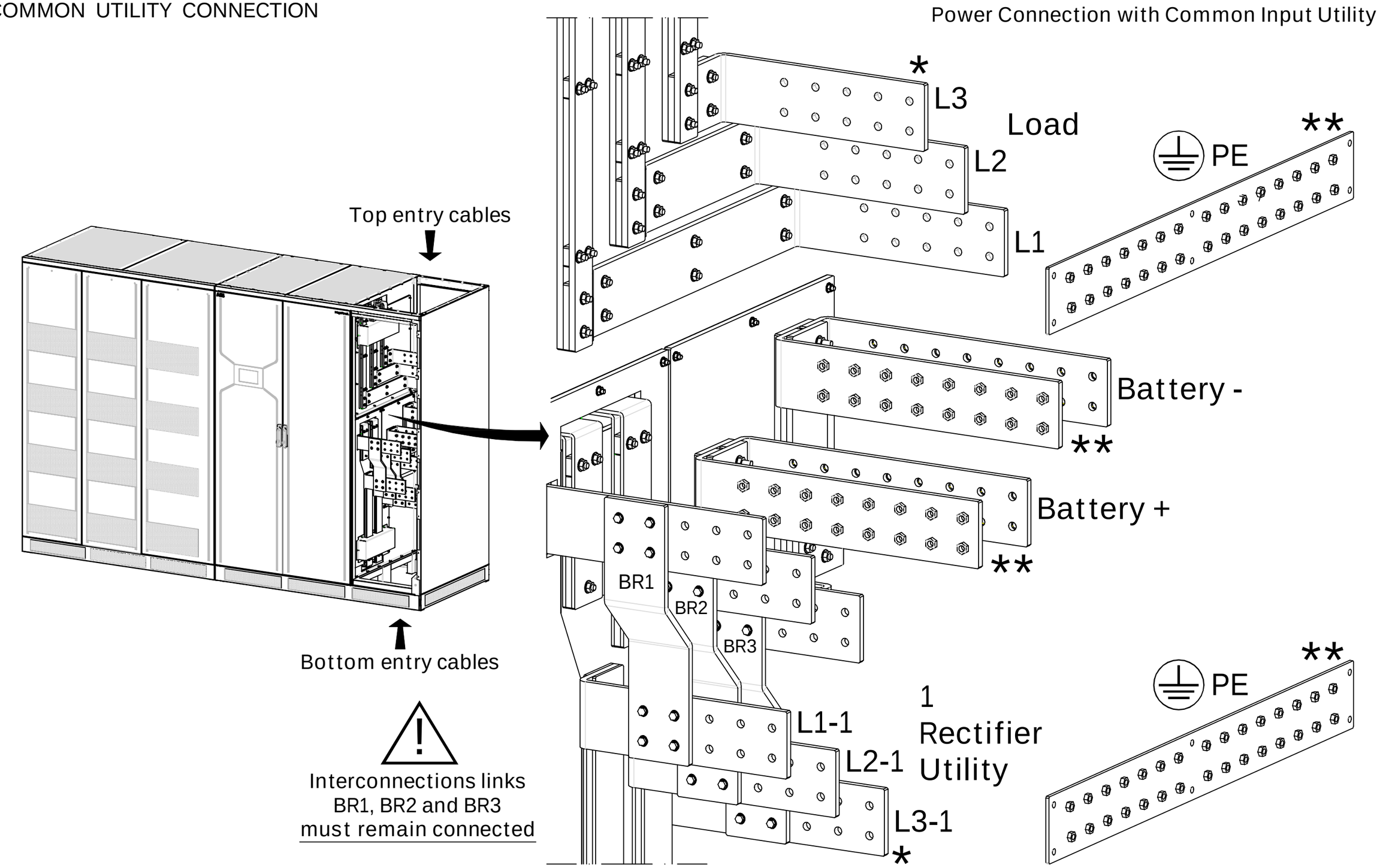

Interconnections links
BR1, BR2 and BR3
must remain connected

*/** See details on pag. 4/7

				Date	04-06-2020	DIMENSION-SHEET MASSBLATT DIMENSIONI D'INGOMBRO DIMENSIONS-ENCOMBREMENT	ABB Electrification Products Industrial Solution	MegaFlex UL 1000 to 1600 kW	REPLACE		
				Des.	Barbarani R.				SERIES S1	DEH0036280	Pag. 2
				Date							7 Pag.
Condit.	Revision	Date	Name	Contr.							

DUAL INPUT UTILITY CONNECTION

Power Connection with Dual Input Utility

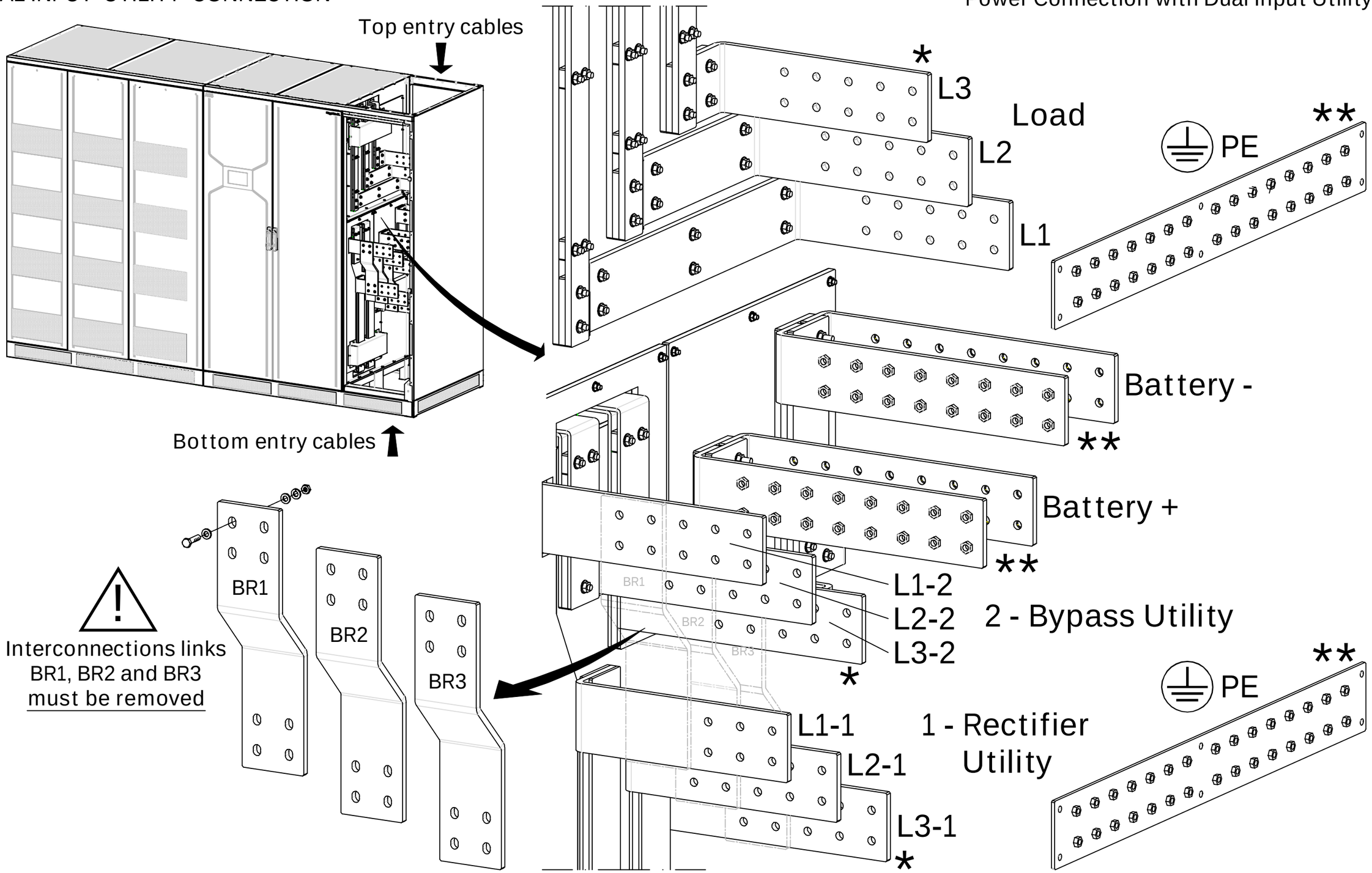

Interconnections links BR1, BR2 and BR3 must be removed

*/** See details on pag. 4/7

				Date	04-06-2020
				Des.	Barbarani R.
				Date	
Condit.	Revision	Date	Name	Contr.	

DIMENSION-SHEET
MASSBLATT
DIMENSIONI D'INGOMBRO
DIMENSIONS-ENCOMBREMENT

ABB
Electrification Products Industrial Solution

MegaFlex UL
1000 to 1600 kW

REPLACE

SERIES S1

DEH0036280

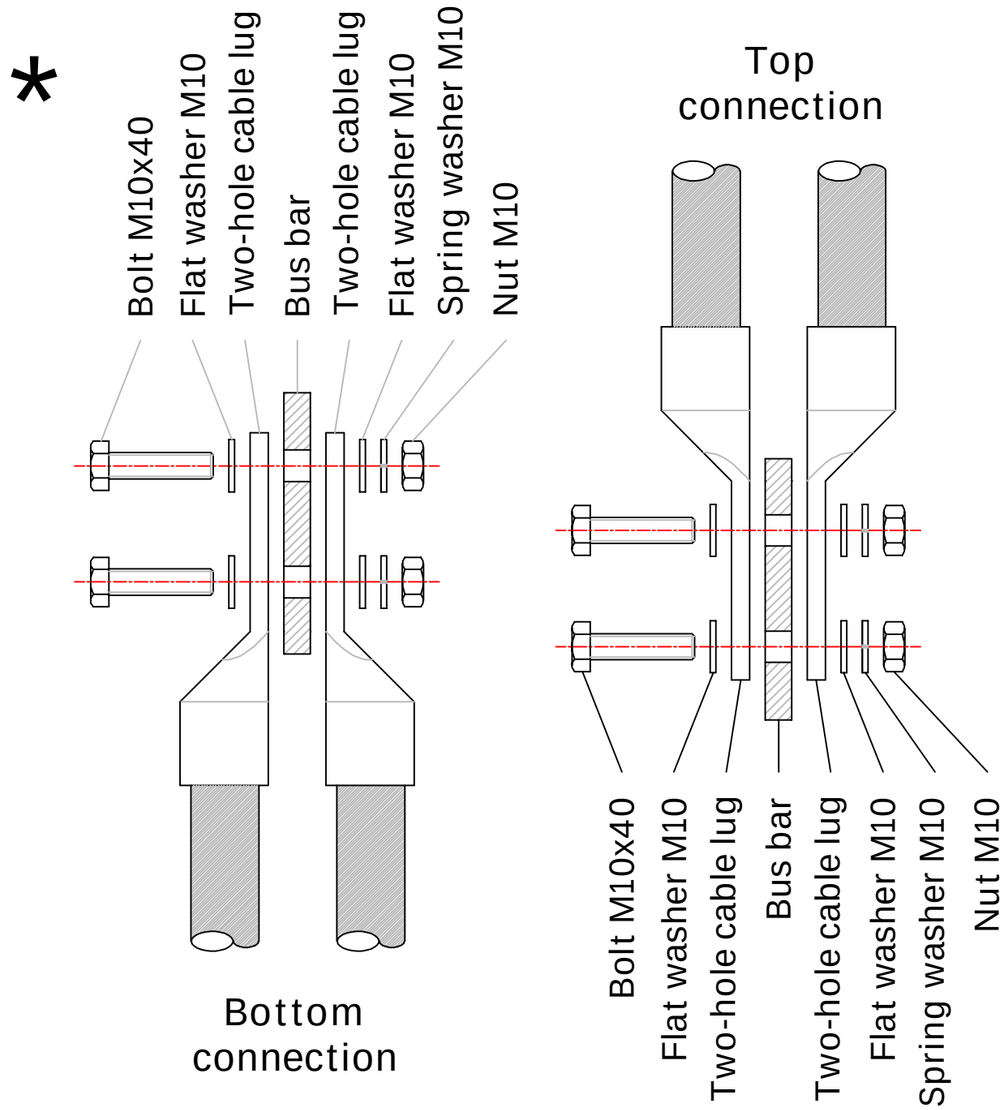

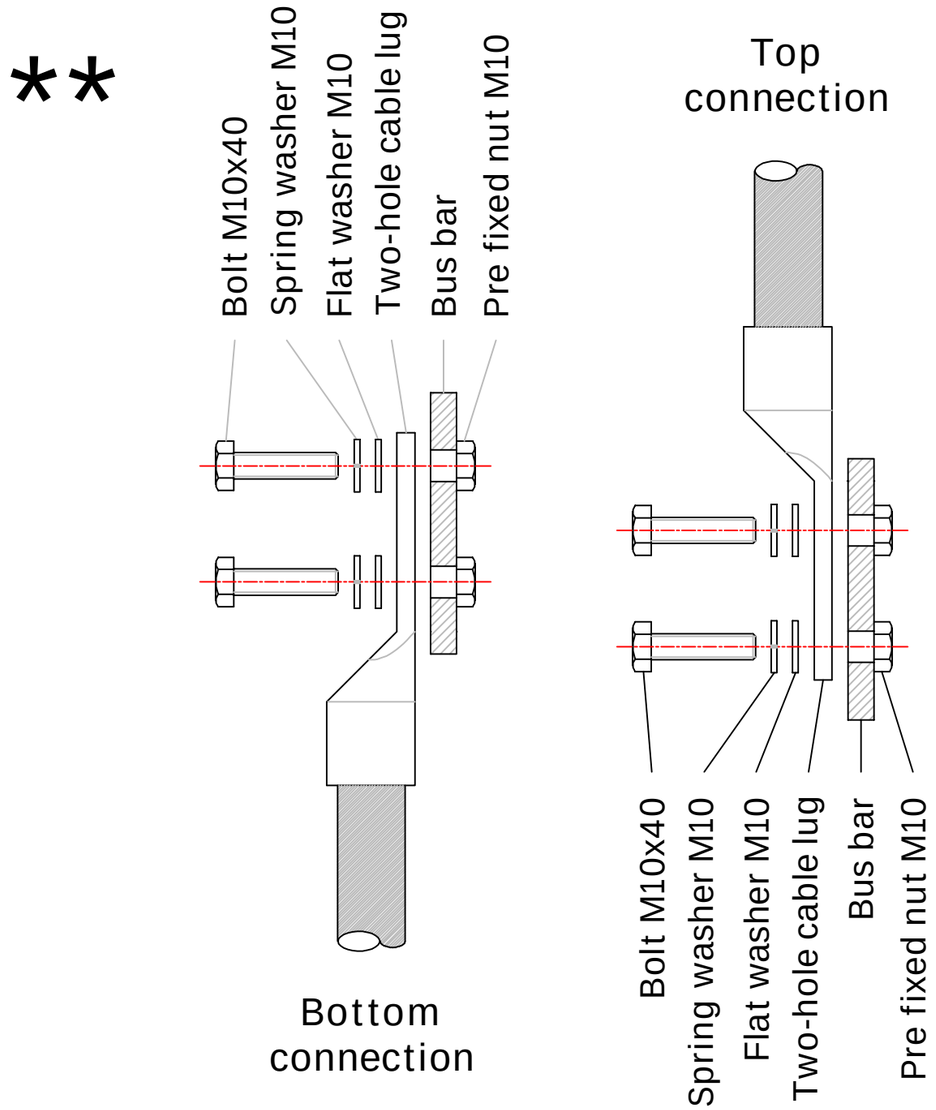

Typical installation using common NEMA two hole lugs

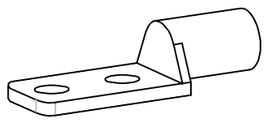

CABLE SIZE	T&B Copper / Two holes	T&B Aluminium / Two holes
500 kcmil	TnB 54223	-
750 kcmil	-	TnB 60278NT

				Date	04-06-2020
				Des.	Barbarani R.
				Date	
Condit.	Revision	Date	Name	Contr.	

CONNECTION DETAILS
MASSBLATT
DETTAGLIO CONNESSIONI
DIMENSIONS-ENCOMBREMENT

ABB
Electrification Products Industrial Solution

MegaFlex UL
1000 to 1600 kW

REPLACE

SERIES S1

DEH0036280

Pag. 4
7 Pag.

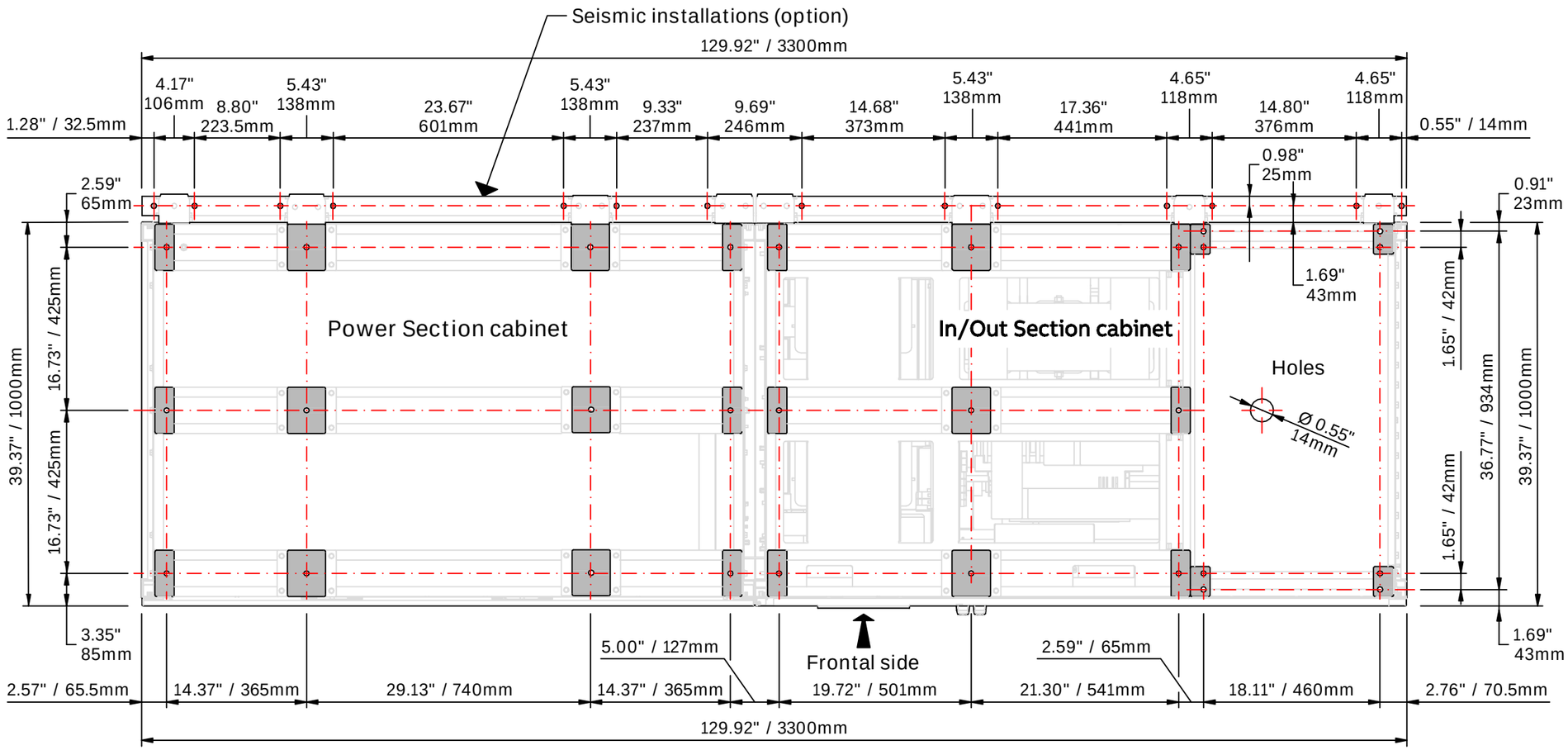

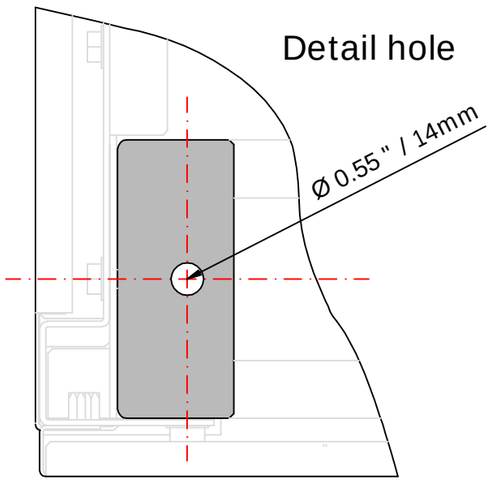

				Date	04-06-2020
				Des.	Barbarani R.
				Date	
Condit.	Revision	Date	Name	Contr.	

DIMENSION-SHEET
MASSBLATT
DIMENSIONI D' INGOMBRO
DIMENSIONS-ENCOMBREMENT

ABB
Electrification Products Industrial Solution

MegaFlex UL
1000 to 1600 kW

REPLACE

SERIES S1

DEH0036280

Pag. 5
7 Pag.

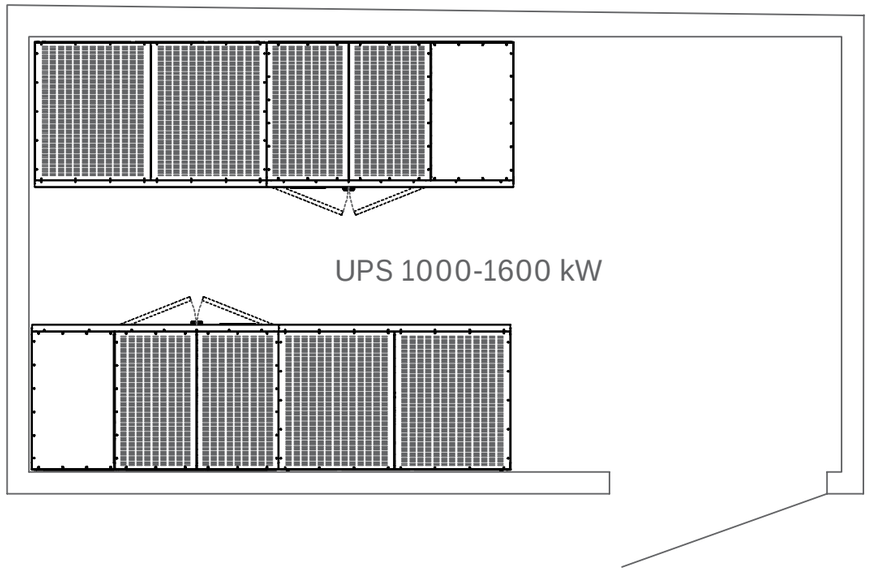

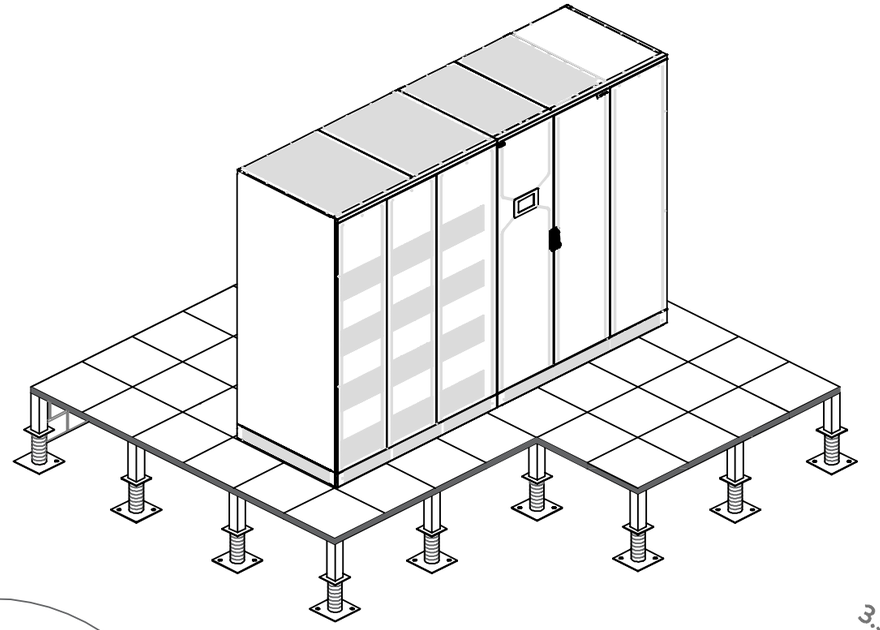

MINIMUM CLEARANCE:

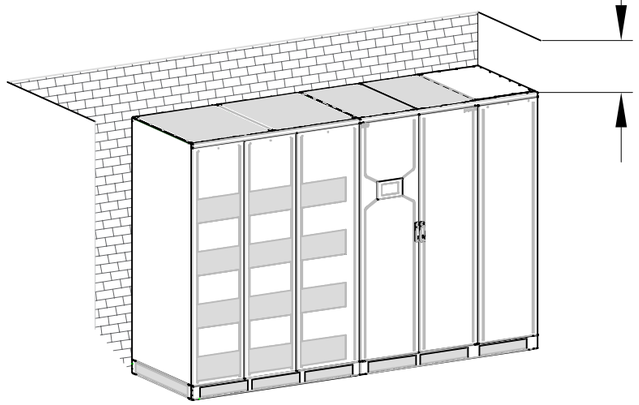

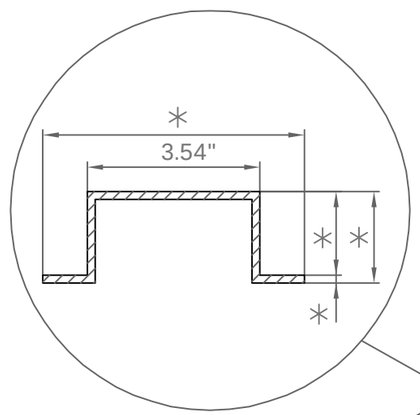

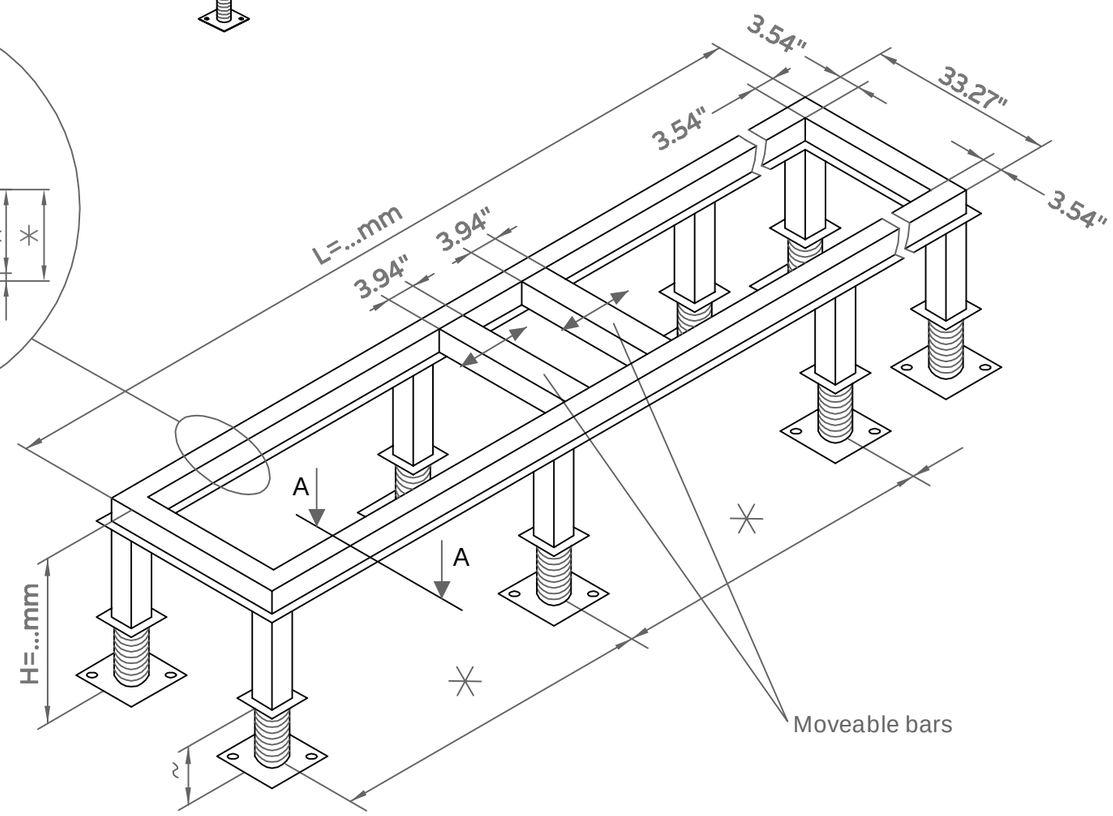

NB: OBSERVE LOCAL PRESCRIPTIONS.

BASEMENT AND FEET NUMBERS / DISTANCES SHALL BE DESIGNED ACCORDING TO EFFECTIVE FLOOR LOADING.

				Date	04-06-2020
				Des.	Barbarani R.
				Date	
Condit.	Revision	Date	Name	Contr.	

MOUNTING PROPOSAL
AUSSTELLUNGS-VORSCHLAG
PROPOSTA DI POSA
PROPOSITION DE DISPOSITION

ABB
Electrification Products Industrial Solution

MegaFlex UL
1000 to 1600 kW

REPLACE

SERIES S1

DEH0036280

Pag. 6
7 Pag.

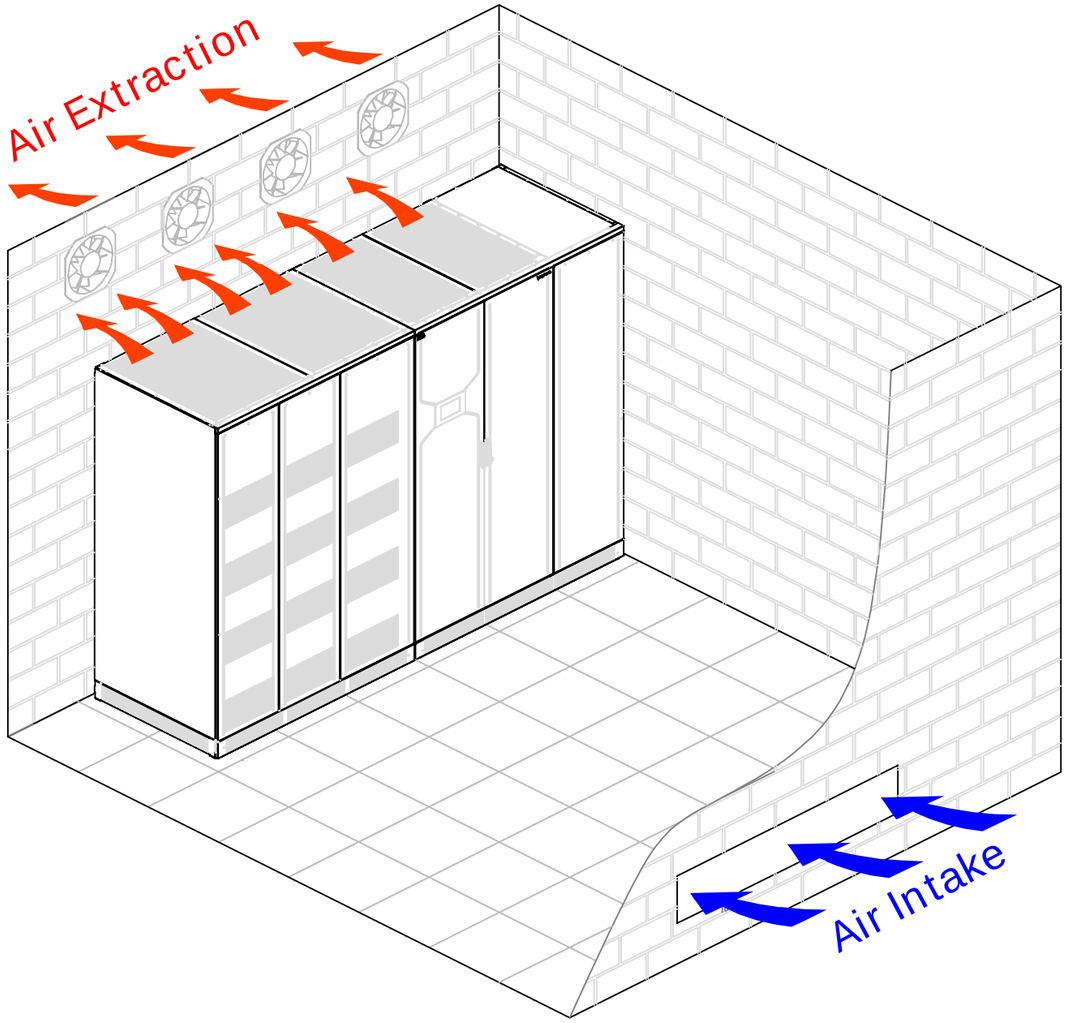

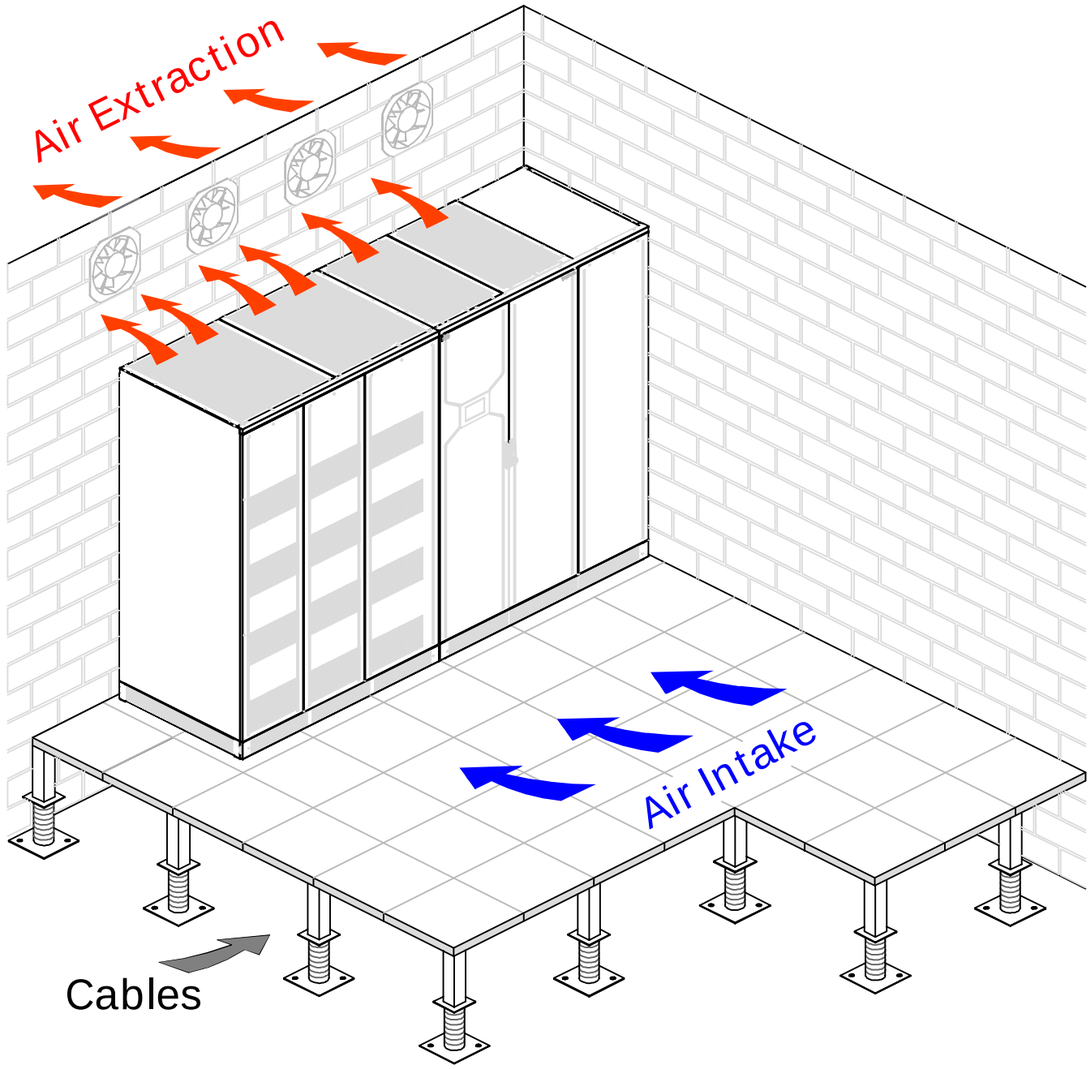

For more information see Technical Data Sheets.

				Date	04-06-2020
				Des.	Barbarani R.
				Date	
Condit.	Revision	Date	Name	Contr.	

VENTILATION
LUEFTUNG
VENTILAZIONE
VENTILATION

ABB
Electrification Products Industrial Solution

MegaFlex UL
1000 to 1600 kW

REPLACE

SERIES S1

DEH0036280

Pag. 7
7 Pag.

https://library.abb.com

—
ABB Power Protection SA
Via Luserte Sud 9
6572 Quartino
Switzerland

abb.com/ups

© Copyright 2020 ABB. All rights reserved
Specifications subject to change without notice