ASEA

Info-No. YT 220-109 E

TYRAK® 73

Tyristor convertors YGFD, YHFD, YGBD och YHBD 1–13 kW

Electronics Division, ASEA, S-721 83 Västerås Sweden

Manual

TYRAK® 73

System for d.c. motor drives
Thyristor convertors types YGFD, YHFD, YGBD and YHBD
Power range 1-13 kW

CONTENTS

8

TYRAK® 73
System for DC motor drives
Thyristor convertors types YGFD, YHFD, YGBD and YHBD
Power range 1-13 kW

CONTENTS

Electronics Division, ASEA, S-721 83 Västerås Sweden

1 TRANSPORT, UNPACKING AND STORAGE

On receipt check the delivery against the packing list. Any observations should immediately be notified to ASEA so that faults can be rectified and delays in erection can be avoided.

If the cubicle (convertors) cannot be erected in the control room immediately upon arrival they must be stored in other dry and dust-protected premises.

The cubicle, which is delivered mounted on pallets, should be transported erect on a fork-lift truck, transport car or similar. If there is an overhead crane at site the cubicle's eye bolts may be used. The angle between the lifting slings must not be greater than 60°. If necessary, the slings should be braced in a suitable manner.

2 INSTALLATION

It is important that the surface on which the cubicle is to be aligned is flat and well-levelled (±2 mm/meter).

Attachment to the foundation should be made after alignment and any bolting together of the cubicles.

The cubicle can be set on a floor with the cable duct beneath the cubicle, with the cable duct below and in front of, or behind the cubicle, on a cantilevered floor or on beams. For cable ducts a depth of at least 400 mm is recommended.

The cubicle should be placed 100 mm from the wall. Above th cubicle the free space should be at least 400 mm. (The height of the cubicle is 2270 mm).

When bolting together cubicles use four bolts (M6) in each of the front and back columns.

The convertors are intended for erection indoors in dry room The ventilation openings must unconditionally be kept free in consideration of cooling.

Electronics Division, ASEA, S-721 83 Västerås Sweden

3 MAIN CONNECTIONS

The convertors are normally designed for direct connection to the mains.

Check that the convertor is designed for the correct mains voltage.

Type designation: YGBD U_{dN} - I_{dmN}, where U_{dN} is the continuous rated d.c. voltage of the convertor and I_{dmN} is the continuous rated direct current of the convertor.

Rated d.c. voltage of the convertors at various supply voltages

Supply voltage	Rated d.c. voltage U_{dN}	
U_{vN}	YGFD, YGBD, YMBD	YHFD
220 V	175 V	160 V
380 V	300 V	280 V
415 V	325 V	305 V

4 EARTHING

Connect a wire to the earthing clamp in the cubicle.

5 LAYING OF CABLES

Control cables should be placed as far as possible from cables which may cause interference. Minimum distance 10-30 cm.

If the control cables run for long distances (more than 50 m) in parallel with interfering cables or the interfering cables have a high voltage, the distance between them and the control cables must be increased. The control cables must also be screened by means of sheets or be placed in steel conduits.

If the control cables must cross cables causing interference they must cross at right-angles.

Control cables should be screened and one end of the screen should be connected to the neutral terminal of the convertor

Control cables are considered to be all cables which are connected to reference inputs and feedbacks (see point 7.4 Instructions for Connection).

6
CONNECTION AND TERMINATION OF EXTERNAL APPARATUS

6.1
Fusing and isolation (does not apply to convertors in enclosures)

The convertors are not provided with isolating switches. In order to be able to de-energise the convertor in a simpl and fast manner for servicing and maintenance an isolating switch should be placed in front of the convertor. The isolating switch may, if required, be common for several convertors, but in this case must be dimensioned appropriat

Cables between isolating switches and the convertor must be fused in accordance with safety regulations.

N.B. A convertor in a box enclosure (GKB) has an isolating switch but no fuses.

6.2
Reference potentiometer

Connections to the reference potentiometer should be made by means of a screened 3-conductor cable and one end of the screen should be earthed at the neutral terminal of the convertor, while the other end should be insulated.

6.3
Tacho-generator

The output voltage of the tacho-generator at maximum speed should be at least 10 V and may be a maximum of 350 V.

Note that for a double convertor a tacho-generator of the polarised type (DC design) is required.

Connect the tacho-generator to the convertor by means of a screened 2-conductor cable. One end of the screen should be connected to the neutral terminal of the convertor, and the other end should be insulated.

7.4
Instructions for connection

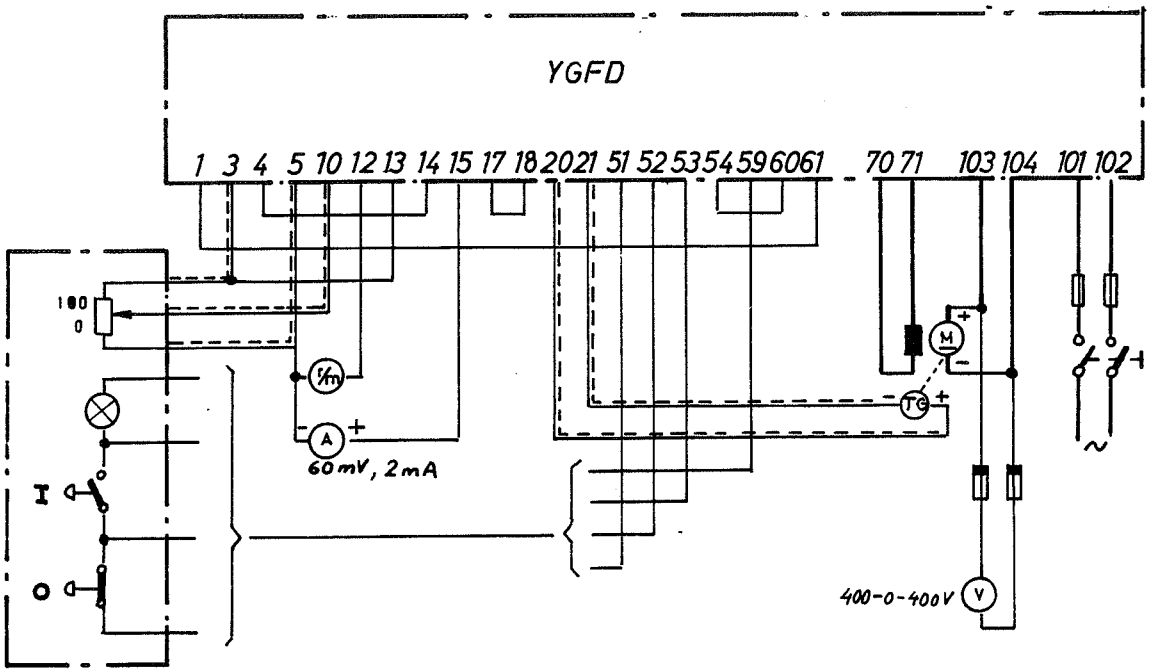

Control box

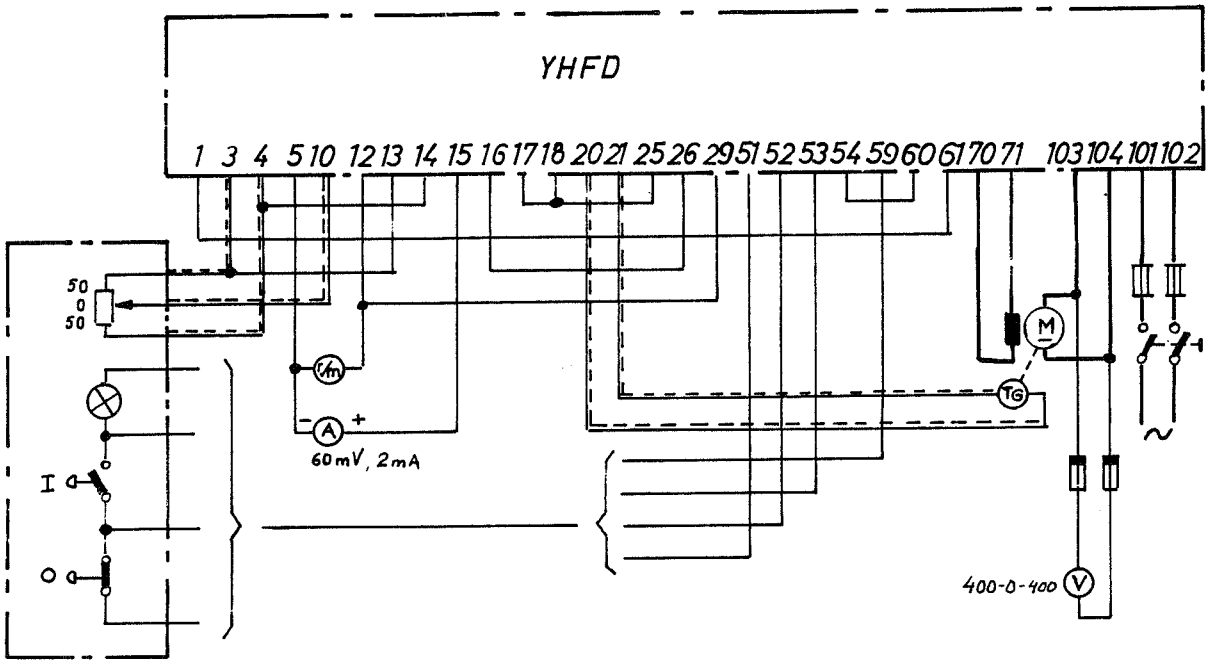

Control box

Control cables are shown in dashed lines.

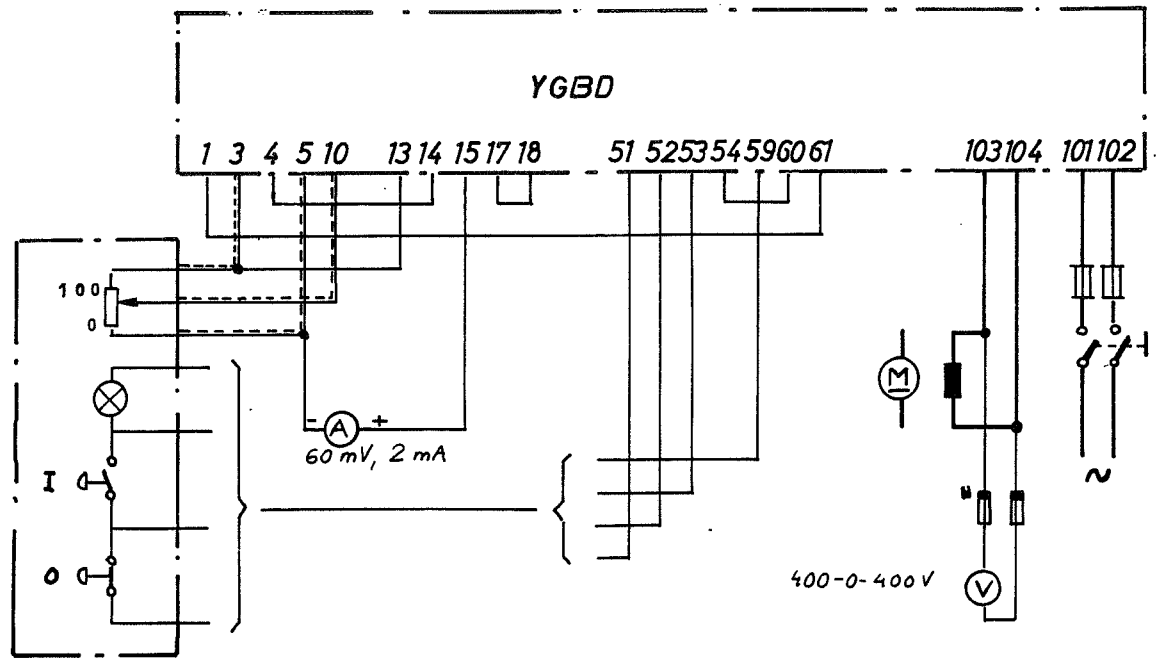

Control box

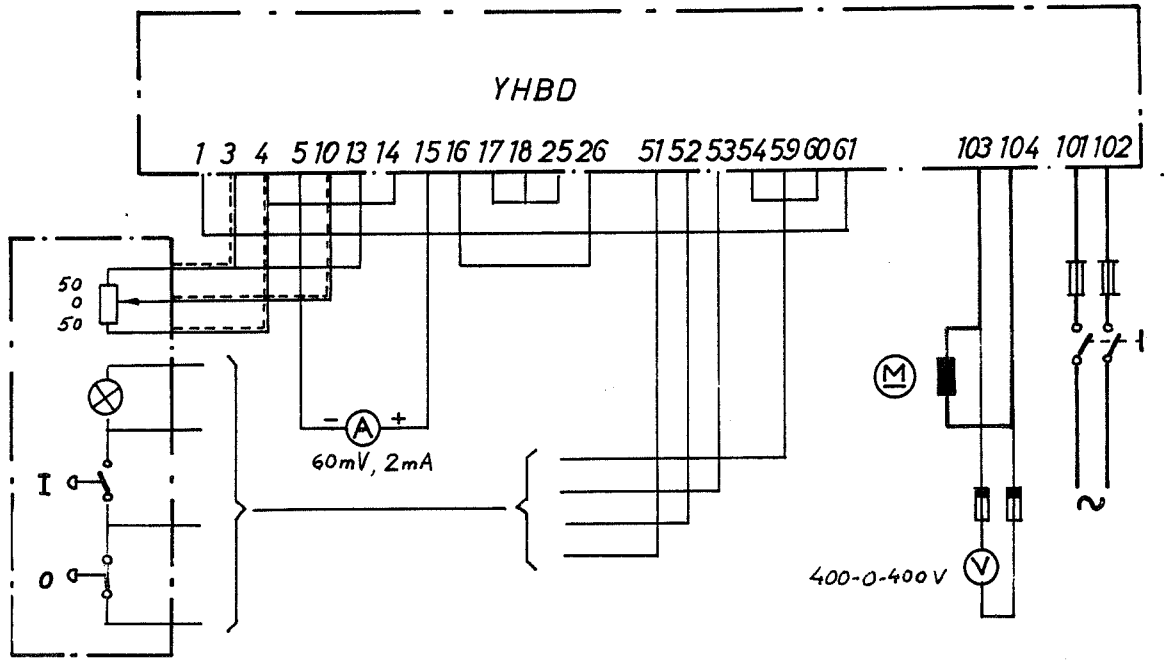

Control box

Control cables are shown in dashed lines

7
DIMENSION PRINT

Convertor

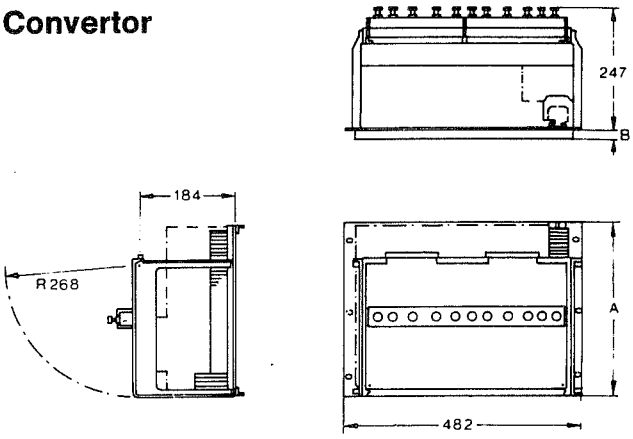

Type	Dim. in mm A	Dim. in mm B	Weight kg
YGBD, YGFD	355(8 S)	18	17
YHBD, YHFD	444(10 S)	50	25

VSG cubicle

Weight approx. 100 kg (basic version, i.e. excluding convertor and accessories).

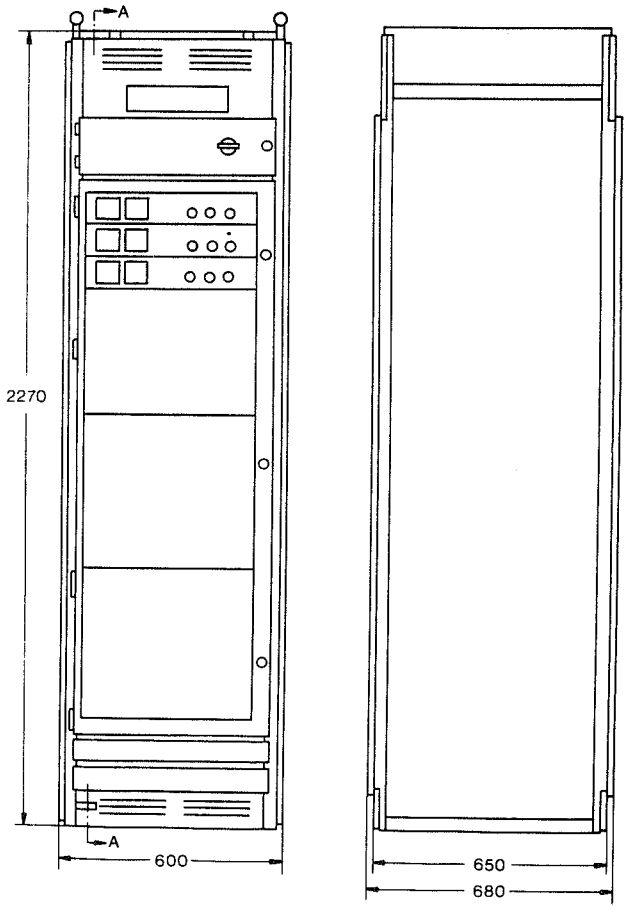

GKB cabinet

Weight approx. 32 kg (basic version, i.e. excluding convertor and accessories).

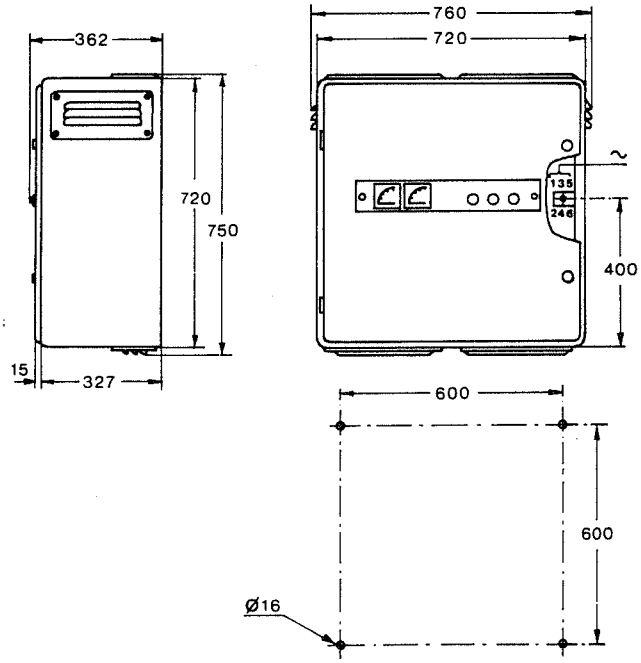

8

TYRAK® 73
System for DC Motor Drive
Thyristor convertors typeYGFD and YHFD
Power range 1-13 kW

CONTENTS

8

1
TEST EQUIPMENT

1 - Universal instrument, 0-500 V DC and AC, ≥ 10 kohms/V DC (e.g. AVO-meter or UNIGOR). The commissioning of YHFD is facilitated if an additional instrument is used.

2 - Instrument leads with banana plugs and crocodile clamps.

1 - Capacitor ≥ 10 μF, ≥ 15 V

1 - ON pushbutton with a make contact for 220 V, 1 A

1 - OFF pushbutton with a break contact for 220 V, 1 A

1 - Reference potentiometer of good quality, 5 kohms, ≥ 0.5 W, linear (e.g. 5248 2051-450).

Circuit diagrams:

	$I_{dmN} \leq 20$ A	$I_{dmN} \geq 32$ A
YGFD:	4893 0661-M 4890 024-T	4893 0661-GU 4893 024-T
YHFD:	4893 0661-V 4890 024-T 4890 024-F	4893 0661-FP 4890 024- T 4890 024-F

WARNING!

The convertor is connected to a dangerous voltage and all work should be carried out with great care. Where such work entails risks of touching live parts the supply to the convertor should be broken (load switch, etc.).

2 CONNECTION OF EXTERNAL APPARATUS

Connections to the convertor type YGFD should be made in accordance with Fig. 2.1 and for type YHFD in accordance with Fig. 2.2. The figures show only the terminal blocks which are of interest for commissioning. Note that the field of the motor and the armature are not connected to the convertor (isolatable terminal blocks).

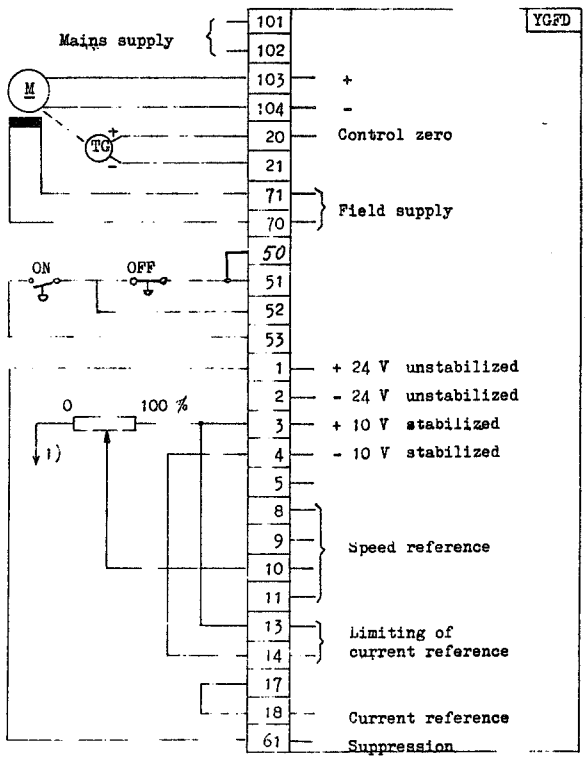

1) During commissioning connections should be made to terminal block 4. After commissioning is completed the connection should be moved from terminal block 4 to terminal block 5.

Fig. 2.1

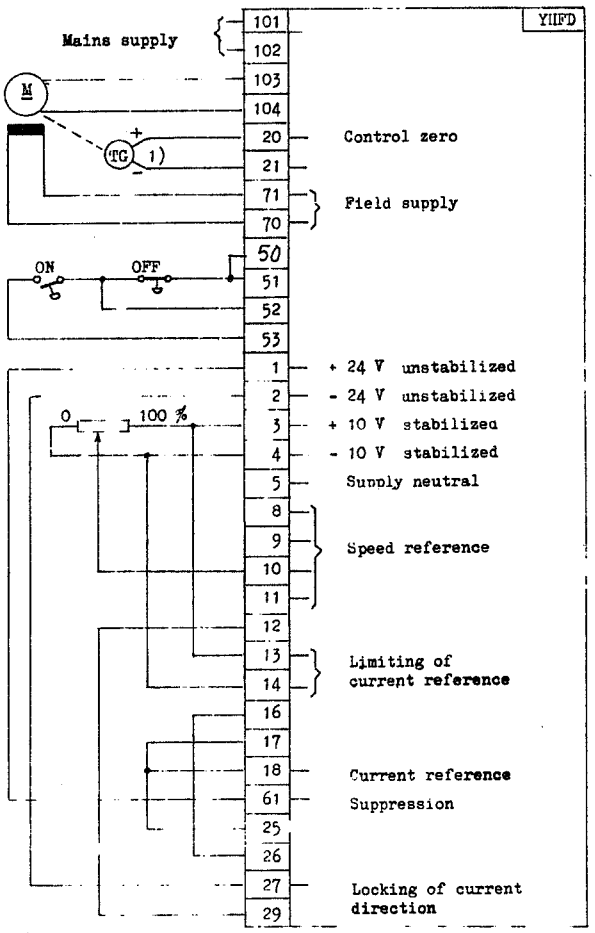

1) Tacho-generator should be polarised and connected in such a manner that the polarity is as given in the Fig. when the speed reference is positive.

Fig. 2.2

Electronics Division, ASEA, S-721 83 Västerås Sweden

3
SETTING OF PROTECTION AND INDICATION

3.1
Current feedback

On delivery the current feedback is set so that 10 V curren reference corresponds to a load current I_d which is equal t the maximum current limit I_{dm} in accordance with the orderi table in Catalogue YT 22-30 part B. Normally this setting must not be changed. Setting of the current limit is described under Point 5.d.

3.2
Instrument for current

(applies to convertor with indicating unit in enclosure)
On delivery the trimming potentiometer (Item R 170) in the steering module is set so that 60 mV/2 mA instrument (e.g. CeWe type RC 62) has a fullscale deflection for a load current I_d equal to the maximum current limit I_{dm}. If an additional instrument is required it should be of the 60 mV type connected to the current measurement, a recalibration of potentiometer (Item R 170) in the steering module must be made. Re-adjustment is suitably done after the convertor is taken into service. Note that a maximum o two instruments may be connected simultaneously to the current measurement.

Re-adjustment takes place as follows. Let only one instrum be connected to the current measurement and run the convert so that readable deflection is obtained on it. Connect the other instrument without changing the current. The deflecti on the two instruments should then be equal, but lower than that on the single instrument. Now adjust by means of the trimming potentiometer (Item R 170) so that the deflection on the instruments increases to the same value as that show previously for the single instrument for the same current.

3.3
Thermal overload protection

The thermal overload protection in the convertor should be set to the rated current of the motor (R.M.S. value, i. e. form factor x mean value, see catalogue YT 22-30 E, part A), if that is lower than the continuous rated current I_{dmN} of the convertor. The protection is designed so that a choice between manual and automatic resetting can be made.

4 CURRENT CONTROL SYSTEM

The following section describes one method of taking the convertor into service with the use of only a universal instrument. The result is adequate for most cases but if an optimisation of the regulating system is necessary commissioning should be carried out by personnel familiar with regulating circuits and with access to a recorder or oscillo scope.

a. Set the "GAIN" switch of the speed regulator to position 1, "TIME/GAIN" switch to position 0, "Phase Lead" to position 0 and "LIMIT 1" to position 0.

Set the "GAIN" switch of the current regulator to position 1 and "LIMIT 2" to position 1.1.

Set the "LIMIT 2" of the speed regulator in accordance with the equation:

$$\frac{\text{Rated current of motor (A)}}{\text{Max. current limit } I_{dm} \text{ (A) of convertor}} \text{ scale divisions}$$

Example

The rated current of the motor is 6 A and the maximum current limit I_{dm} of the convertor according to the ordering table is 10 A. The setting of "LIMIT 2" will then be

$$\frac{6}{10} = 0.6 \text{ scale divisions}$$

The direct current is now limited to the rated current o the motor and a condition for the current trimming of th current control system is that this current lies above t limit for continuous current, which is probably the case with ASEA LAT and LAK motors with series inductance. If it is suspected that the limit for continuous current li above the rated current of the motor a check must be mad with an oscilloscope (continuous current entails that th current is always greater than 0) and "LIMIT 2" must possibly be increased.

Connect the DC motor to the convertor (The field must not be connected as yet). Set the reference potentiometer to 0 and push the ON pushbutton. Turn up the reference towards 100% for a short instant and check that the armature of the DC motor does not rotate. If the armature rotates the armature must be locked in a suitable manner. (The torque must be low as the field supply is not yet connected).

N.B. The armature must not be loaded in this manner for more than 10 seconds at a time, after which cooling for at least 30 seconds is required.

b. Connect an instrument to test terminals T6-T27 (steering voltage) via a capacitor of 10 μF, ≥ 15 V (placed in series with one measuring lead), and connect the instrument for measuring AC voltage (3 V range).

The "GAIN" switch of the current regulator should remain in position 1. Turn up the reference to 100% for a few seconds and observe the instrument's deflection. The instrument should make a small deflection in the order of a few tens of millivolts. Change the "GAIN" of the current regulator to position 2 and turn the reference to 100% again (remember cooling between each current pulse!). The instrument deflection should now increase by a factor of 1.5-2.5. In thi manner "GAIN" should be increased one step at a time until the increase between two steps is considerably greater than 2.5 (the gain has then become so high that the current regulation oscillates when the current becomes continuous). Now turn the "GAIN" two steps backwards.

Example

"GAIN"	1	2	3	4	5
Instrument deflection mV	20	50	90	200	≫ 500

The final position for "GAIN" will be 5-2 = 3

N.B.! If the current regulation cannot be made to oscillate, which is probably the case with ASEA's LAT and LAK motors with smoothing inductors, the "GAIN" should be set to position 5. The missing oscillations may also be due to the limit for continuous current lying above the rated current of the motor, (check this with an oscilloscope). In such a case the current limit should be increased and a new trimming procedure carried out.

Push the "OFF" pushbutton.

5
SPEED CONTROL SYSTEM

a. Before trimming the speed control system the speed feedback should be adapted to a suitable level. Adaptation is made by removing some of the jumper connections L to S on the steering module (see circuit diagram 4890 024-T). Calculate the maximum output voltage of the tacho-generator, (voltage measuring unit). Read from Table 1 below which jumper connections should be removed for this output voltage.

Table 1

Tacho-generator (Voltage measuring unit) Max. output voltage V	Jumper connection which should be removed
12	-
12-15	S
15-22	S, R
22-38	S, R, P
37-75	S, R, P, O
70-155	S, R, P, O, N
130-290	S, R, P, O, N, M
190-430	S, R, P, O, N, M, L

If two alternatives are possible according to Table 1, selec the alternative which will give the best steady state contrc accuracy, that is the highest voltage range.

8 N.B. On account of the special properties of YHFD during inversion the maximum motor voltage must be limited.

Table 2

Mains voltage U_{vN} V	Rated direct voltage[1] U_{dN} V
220	160
380	280
415	305

[1] Applies only as a rule to YHFD. See Catalogue YT 22-30 part A.

b. Connect the field of the motor to the convertor. Note the possibility of adjustment of the maximum operating speed of the motor by changing the field voltage. This can be reduce in three steps, each of approximately 10% of the rated field voltage, by changing the taps on the auxiliary transformer (see circuit diagram). Any adjustment of the maximum workir speed should be made before trimming of the speed control system is started.

Set "LIMIT 2" of the speed regulator to position 0.2, the reference potentiometer to 50% (i.e. 0 V) and push the "ON" pushbutton. Turn up the reference to approximately 55% and check that the motor starts to rotate smoothly. If the motor runs away, i.e. accelerates to full speed with this low reference the tacho-generator feedback or field supply has incorrect polarity. If the motor runs away with the correct direction of rotation change the polarity of the tacho-generator but if the motor runs away with the wrong direction of rotation change the polarity of the field suppl If it is possible to control the motor by means of the reference potentiometer but the motor rotates in the wrong direction the polarity of both the tacho-generator and the field supply should be changed. Set the "TIME/GAIN" switch of the speed regulator to position 1. Stop the convertor by means of the "OFF" pushbutton.

c. Connect the instrument to terminals 21 (+) and 20 for measuring the tacho-generator feedback. (Select a suitable measuring range!) Push the "ON" pushbutton and turn the reference to 100%. Adjust by means of "SIGN. ADJ." potentiometer so that the instrument shows the desired speed at full reference.

N.B. For YHFD check also the maximum motor voltage in accordance with Table 2. Set the reference to 50% and push the "OFF" pushbutton.

d. Disconnect the load (isolatable terminal blocks 103, 104). Connect the instrument (measuring range 10 V DC) to the test terminal T 13 (-) and T 27 for measurement of the current reference.

Calculate the magnitude of the current reference at the desired maximum current limit as follows:

$$I_{ref} = \frac{\text{Desired max. current limit (A)}}{\text{Max. current limit } I_{dm} \text{ (A)}} \cdot 10 \text{ (V)}$$

<u>Example</u>

For a YGFD 300-10 a maximum current limit of 15 A is desired

$$I_{ref} = \frac{15}{20} \times 10 = 7.5 \text{ V}$$

Start the convertor with the "ON" pushbutton and turn the reference to 100% (the motor should be at standstill). Adjust "LIMIT 2" of the speed regulator so that the instrument shows the calculated value of I_{ref} at current limit. If the convertor is of type YHFD the reference should also be turned to 0% and "LIMIT 1" of the speed regulator should be adjusted to the same I_{ref} (however with the opposite polarity). For YGFD "LIMIT 1" of the speed regulator should be set to 0.2.

Turn the reference back to 50% and stop the convertor. Set "GAIN 1" on the speed regulator to 1 and "TIME/GAIN" to 0 and connect the load.

e. Interchange the instrument leads on the instrument. Measuring range still 10 V DC. Start the convertor and set the reference to 90%. Note that the motor should be unloaded during trimming of the speed control system. The instrument should now have a small deflection in the wrong direction, of the order ≤ 1 V. Make a "step" in the reference by increasing it for a short time to 100% - and back to 90% again. The instrument should then first have a deflection in the wrong direction (during the increase of the motor speed) and then have a deflection in the correct direction when the motor speed drops. (This deflection is, expressed in volts ≤ 10 times the set value of "LIMIT 1" of the speed regulator). When the speed drops to the value which corresponds to 90% reference the instrument deflection should return to the original position, i.e., a small deflection in the wrong direction, without oscillating around the zero position. Now increase the "GAIN" switch of the speed regulator one step at a time and make steps in the reference in the same manner as above until the instrument needle starts to oscillate around 0. (The speed control system has now started to hunt on account of the gain being too high). Now adjust the "GAIN" on the speed regulator <u>two steps backwards.</u>

<u>Example</u>

If the speed control system starts to oscillate at a "GAIN" position of 10, the final position of the "GAIN" switch should be 8.

f. Maintain the same reference as under e. Adjust the "TIME/GAIN" in the same manner as used for adjusting "GAIN" above. When the "TIME/GAIN" switch reaches a position which gives oscillations in the speed control system turn the "TIME/GAIN" switch <u>two steps backwards.</u>

Example

If the "TIME/GAIN" position 0.05 results in oscillation in the speed control system the final position for the "TIME/GAIN" switch should be 0.2.

If it is desired to know the time constant which has been set in the feedback across the speed regulator this can be obtained by multiplying the position of the "GAIN" switch with the position of the "TIME/GAIN" switch and the result will be obtained in seconds.

Example

"GAIN" = 10, "TIME/GAIN" = 0.1 seconds gives
10 • 0.1 seconds = 1 second.

Note that the "TIME/GAIN" switch must not be set to positior 0 when commissioning of the convertor is finished (this woul give a poor steady-state accuracy). Stop the convertor by means of the "OFF" pushbutton.

6
REVERSING, YHFD

a. Remove the jumper connection between terminals 2 and 27. On account of this jumper connection YHFD has been blocked in one direction and has therefore worked only as a single convertor.

b. Set the reference potentiometer to 50%. Start the convertor the motor should be unloaded, and turn the reference forward and backwards around the 50% position. The motor should the change its direction of rotation.

c. Turn the reference to 100%. Interchange the instrument lead on the instrument (measuring range 3 V DC). The instrument needle should now make a small deflection in the "correct direction" of the order of 1 V or less.

d. If the instrument needle starts to oscillate the speed regulator is hunting on account of the gain being too high. In such a case adjust the "GAIN" and "TIME/GAIN" switches of the speed regulator alternately one step at a time backwards

8

Example

If the speed control system starts to oscillate with the "GAIN" set to 5 and the "TIME/GAIN" set to 0.05 the final position of the "GAIN" switch should be 2 and the final position of the "TIME/GAIN" switch should be 0.1.

e. This simplified procedure for trimming the armature reversal system is not sufficient if the speed of response of the convertor is to be utilised optimally. For such a trimming it is necessary that commissioning is carried out by personnel who are well familiar with the functions of the convertor.

7 FINAL CHECK

a. If the convertor is to be steered direct by an external reference potentiometer (according to Figs. 2.1 and 2.2) the potentiometer connection for YGFD which has been connected to terminal 4 (-10 V) during commissioning should be moved to terminal 5 (0 V). This results in the motor starting to rotate for a small reference and not as before at 50%. On YHFD the potentiometer should be connected as during trimming.

b. Before commissioning of the convertor can be considered to be complete, the terminals in the terminal blocks should be tightened. Check also that the control printed circuit board is properly mounted.

TYRAK® 73
System for DC motor drives
Thyristor convertors type YGFD, YHFD, YGBD and YHBD
Power range 1-13 kW

CONTENTS

8

1 GENERAL

The ON and OFF operation of the convertor takes place by means of external spring-return pushbuttons connected to the convertor. On receipt of the ON operation the field supply contactor picks up. This contactor latches and thereafter the main contactor is closed by an auxiliary contactor. Thereby the suppression of the regulating system is cancelled and the convertor is ready for operation

For a normal OFF operation and for a thermal tripping in the mains circuit the field supply contactor drops and suppression of the regulating system occurs. After a time delay of approximately 0.5 seconds the main contactor drops. The time delay results in the main contactor breaking in the currentless condition.

The convertor can be interlocked so that it does not generate an output voltage until the interlocking is cancelled. A small remanent voltage is however present when the convertor is only suppressed. Interlocking is achieved by connecting a make contact between terminal blocks 1 and 6

Fig. 1 shows an example where a motor must be running befo: the convertor is allowed to give an output voltage. Note that the main contactor is <u>not</u> operated by an interlock in this circuit.

If it is desired that the convertor should be started with the ON pushbutton after an interlocking sequence,the interlocking contact (contacts) should suitably be placed between the OFF pushbutton and terminal block 51.

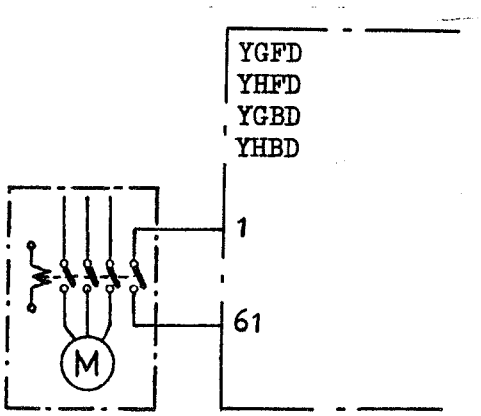

Fig. 1

8

In Fig. 2 a pump actuates the make contact and the pump must be running before the convertor can be started.

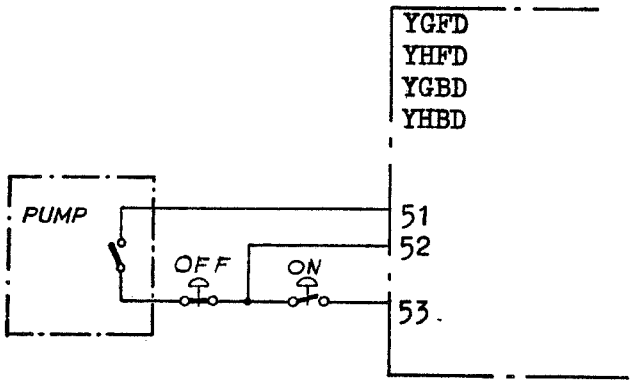

Fig. 2

2
START

Connect the mains supply to the convertor . Ensure that any starting or operating conditions are fulfilled (e.g. lubrication, ventilation, etc.). Push the ON pushbutton.

3
OPERATION

Set the desired motor speed by means of the reference potentiometer which is connected to the convertor.

For drives with a double convertor the desired direction of rotation must also be selected by giving the speed reference of appropriate polarity.

4
STOP

Push the OFF pushbutton or cancel the operating conditions.

5
THERMAL OVERLOAD TRIPPING

On thermal overload tripping the convertor can be restarted after 1-2 mins. Restarting takes place automatically if the protection is set for AUTO-reset and manually if the protect is set for HAND-reset.

8

N.B. In the event of any interruption in service the cause of the fault should be investigated. See the FAULT TRACING Instruction.

TYRAK ® 73
System for DC Motor Drive
Thyristor Converters types YGFD, YHFD, YGBD and YHBD
Power Range 1-13 kW

CONTENTS

8

1
TEST EQUIPMENT

2 - Universal instruments, 0-500 V DC and AC, ≥ 10 kohms/V DC (e.g., AVOmeter or UNIGOR)

1 - Oscilloscope of simple design with facilities for synchronizing of horizontal trace with mains frequency ("Line" triggering).
NOTE: the oscilloscope must be fed via an isolating transformer (two-winding transformer)

1 - Potentiometer of good quality, 5 kohms ≥ 0.5 W, linear. (If the reference potentiometer is placed in the vicinity of the convertor an extra potentiometer is unnecessary).

Measuring leads, some crocodile clamps

Banana plug reducers ∅ = 2.3 mm (for measurement of outer terminal blocks)

Relevant circuit diagrams

Commissioning instruction

2
INVESTIGATION OF TRIGGERING UNITS YXT 101 AND YXT 102

2.1
Speed regulator, voltage regulator

If a fault is suspected in the speed regulator the following simple steadystate test will decide whether this is the case.

Disconnect the load from the convertors (NOTE: isolatable terminal blocks 103, 104).

Set the "Gain" on the speed regulator to position 1 and "Time/Gain" to position 0 (note their original positions).

Connect the external connections to a 5 kohm potentiometer to +10 V and -10 V respectively (test terminals T25 and T26) and the centre tap to 100 kohms reference input (test termina T3). If the normal reference potentiometer is located near the convertor it may used instead in a corresponding manner. If an extra potentiometer is used the normal potentiometer should be disconnected.

Start the convertor.

Check the supply voltages ±24 V, ±15 V, ±10 V and 0 V to the triggering unit.

Connect an instrument to the test terminal T13 (output of speed regulator) and T27 (0 V) and turn the potentiometer from one end position to the other and observe the instrument deflection. This should follow the turning of the potentiometer so that for a given input voltage (e.g., +4 V) the same output voltage should be obtained with the opposite polarity (i.e., -4 V) until the limit of the output voltage is attained. The limit of the output voltage is determined by the value set on the "Lim. 1" and "Lim. 2" settings on the speed regulator in accordance with the following:

Limit (voltage limit) of output voltage in V x set value in scd. (scale divisions).

Check that the limit is correct.

Allow the potentiometer to remain fully turned to one directi and switch off the convertor. The output voltage should now be limited to approx. 0 V by phase-back.

If the test now carried out on supply voltages, controlabilit and phase-back have given the correct results the regulator is in all probability fault-free. Restore the connections an settings to their original positions.

2.2 Current Regulator

If a fault is suspected in the current regulator the followin checks may be carried out:

Disconnect the load from the convertor (NOTE! isolatable terminals 103, 104). If the convertor is of type YHFD or YHBD it should be blocked in one direction. Link terminal block 2 and terminal block 27.

Make the same connections and settings as under 2.1 Checking of Speed Regulator.

Connect a resistor of 82 kohms between the output (test terminal T6) of the current regulator and the 22 kohm input (test terminal T15) on the current regulator and start the convertor.

Check the supply voltages ±24 V, ±15 V, ±10 V and 0 V to the triggering unit. Thereafter connect the instrument to the output of the current regulator (steering voltage - test terminal T6) and 0 V (test terminal T27) and turn the potentiometer between the end positions and observe the instrument deflection. This should follow the turning of the potentiometer so that a given potentiometer voltage (e.g., +5 V) should give the same output voltage without sign reversal (i.e. +5 V) until the limit of the output voltage is attained. The output voltage of the current regulator is limited in the "positive direction" to approximately 10 times the set value in scd (V) by "Lim. 1" of the current regulator and in the "negative direction" to approximately -10 V. Check that this is so!

Allow the potentiometer to remain fully turned in the "positiv direction" (i.e. approximately +10 V output voltage from the regulator) and switch off the convertor. The output voltage should now change to approximately -10 V on account of the phase-back in conjunction with switching off.

If the tests on the supply voltages, controlability and phase-back have given the correct results the regulator may be considered to be fault-free.

Restore the connections and settings to their original positio

2.3 Trigger Pulse Generator

The following simple test of the function of the trigger pulse generator can be made using a universal instrument (a more thorough check requires the use of an oscilloscope):

Apply the mains voltage, the convertor need not be started.

If the convertor is of type YHFD or YHBD the convertor should be blocked in one direction. Link terminal blocks 2 and 27.

Carefully measure the voltage across test terminal T19 (+) an 0 V (test terminal T27) and note the result. Term the measured voltage U2. Move the instrument connection from test terminal T19 to test terminal T7 (and T8). The followin voltage should now be obtained

$$= \frac{U2 + 9.2}{2} \text{ V } \pm 5\%.$$

If the test gives the correct result the trigger pulse generator may be considered to be fault-free.

Restore the connections to their original positions.

2.4 Blocking Unit

The static function of the blocking unit can be checked in th following manner:

Disconnect the load (NOTE! isolatable terminal blocks 103, 104) from the convertor.

Make the same connections and settings as under 2.1 Checking of Speed Regulator.

Start the convertor.

Check the supply voltages ±24 V, ±15 V and 0 V to the blockin unit.

Connect one instrument (A) between test terminal T19 (output of blocking unit) and test terminal T27 (0 V). Connect the second instrument (B) between test terminal T20 (output of blocking unit) and test terminal T27 (0 V). Turn the potentiometer so that the input voltage is +2 V. The instrument A should now show approximately +24 V and instrument B should show approximately 0 V.

Turn the potentiometer so that the input voltage becomes - The instrument A should now show approximately 0 V and instrument B should now show approximately +24 V.

Link +10 V (test terminal T25) with terminal 28 (simulation of current). Turn the potentiometer from +2 V to -2 backwards and forwards. The instrument deflection should remain unaltered. Remove the links.

Connect an instrument (+) to the output (test terminal T6) of the current regulator and 0 V (test terminal T27). Measuring range: 10 V.

Turn the potentiometer forwards and backwards around 0 V. The output voltage of the current regulator should be positiv (see point 2.2 10 times the set value on "Lim. 1"). At the zero crossing of the input voltage the output voltage should "duck" a little on account of the blocking unit generating a phase retard signal (duration approximately 10 ms) to the current regulator.

If the blocking unit functions correctly according to the above test it may be considered to be fault-free.

Restore the connections and settings to their original positions.

NOTE! The above function presupposes that a normal external connections between terminals 16-26 and 17-18-25 are present.

3
CHECK OF THYRISTORS

The correct functioning of a thyristor can be checked in the following manner:

Undo the connections to the gate and cathode (see Fig. 3-1 ar Fig. 3-2). The thyristor may be allowed to remain in the heat sink until it has been determined that it must be replaced. For thyristors with the appearance as shown in Fig. 3-1 the gate lead must be determined by means of resistive measurement on the two thin leads. (This does not apply to thyristors of ASEA's manufacture. These have always a white gate connection and a red auxiliary cathode connection)

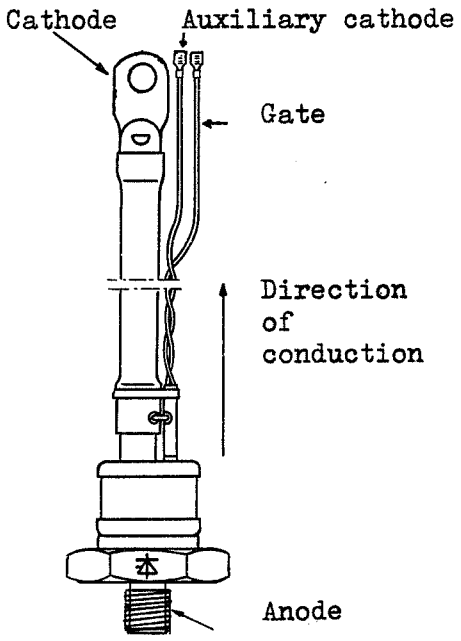

Fig. 3-1

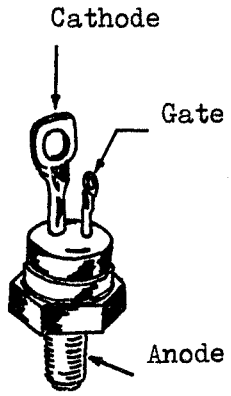

Fig. 3-2

Use a range for measurement of low resistance and connect one instrument lead to the cathode of the thyristor (larger lead) and the other to one of the thin leads. If the instrument shows 0 V the measurement is being made on the auxiliary cathode lead. If the instrument makes a certain deflection (from a few 10s of ohms to 100-200 ohms) we are measuring on the gate lead. If the instrument shows 0 V on both leads, the instrument should be checked by measuring on a resistor

(e.g. 120 ohms). If the instrument shows the correct value there is a short circuit between the gate and cathode and the thyristor must be replaced. (Use a torque spanner). See also point 3. Always check both thin leads. If there is an open circuit on the auxiliary cathode lead this can be remedied by connecting an extra lead between the cathode and the auxiliary cathode.

Now connect the anode of the thyristor via a 24 V lamp (≥ 5 W) to terminal 1 (+24 V) of the convertor, the gate of the thyristor via a make contact (B) and a resistor (120 ohms, 5 W) to terminal 1 and the cathode of the thyrist to terminal 5 (0 V). See Fig. 3-3. Note that the mains voltage should be connected to the convertor, <u>but do not start the convertor by means of the "ON" pushbutton</u>.

If the lamp lights up as soon as the cathode is connected to terminal 5 the thyristor is short-circuited and must be replaced. If the lamp does not light up, close contact B momentarily. The thyristor should now "trigger" and the lamp should light up. If this is not the case the thyristor must be replaced. This check reveals most defective thyrist (the most common fault is a short circuit on the anode-cathode), but if a faulty thyristor is still suspected test equipment as shown in Fig. 3-4 must be used. It may however be difficult to obtain the variable direct voltage which is required and therefore it is perhaps simpler to replace the thyristor as soon as a thyristor fault is suspected. On replacing a thyristor it can be determined whether the thyristor replaced has been defective or not. If the test equipment as shown in Fig. 3-4 can be obtained, the test should be carried out as follows:

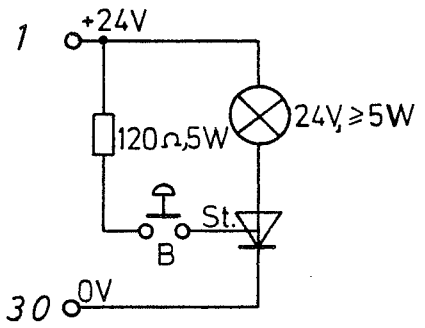

Fig. 3-3

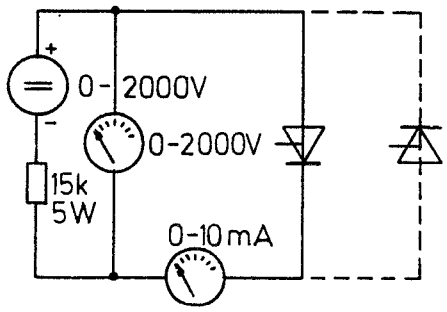

Fig. 3-4 A 3-4 B

Connect the thyristor (which may be allowed to remain in the heat sink) to the test equipment in accordance with Fig. 3-4 Start with direct voltage = 0 V. Slowly increase the voltage towards 2000 V while observing the mA meter. At a certain level of direct voltage the current should start to flow through the resistor. Increase the voltage until 5 mA flows through the thyristor. Now read the voltage on the voltmeter This ("off-state voltage") should be ≥ 1000-1200 V for convertors intended for 380, 415 V mains connection, and for 220 V mains connection ≥ 500-700 V. If the off-state voltage withstand is too low there is a risk that the thyrist will fire incorrectly with a fuse failure as the probable result.

If the thyristor shows satisfactory off-state voltage the reverse voltage should be checked also. Connect the thyristo in the manner shown in Fig. 3-4 B (polarity reversed) and follow the same procedure as before until the current through the thyristor is 5 mA. Read the voltage (= reverse voltage) on the voltmeter. The same limits of reverse voltage apply as for off-state voltage.

NOTE! A torque spanner must be used for tightening all semi-conductors when they are replaced.

Recommended torque for thyristors according to Fig. 3-1 is 11 Nm and for thyristors according to Fig. 3-2 is 2 Nm.

4
USE OF FAULT TRACING DIAGRAMS

4.1
Procedure

In the following it is presupposed that the fault has arisen in a convertor which has already been commissioned, i.e. faulty connections and similar faults may be eliminated.

When a fault occurs in the convertor equipment the first symptom must be established, e.g. does the motor run away? Do high speed fuses blow on starting? Does the motor start? etc. When the fault has been determined find the fault tracing diagram which suits the symptoms in question.

Start in the "start box" with the text which agrees with the main fault symptom and proceed in the direction of the arrow to the next block. This may either be a "measuring block" or a "symptom block". If it is a measuring block carry out the measurements given. If the result of the measurement agrees with that given in the block proceed in the direction of the "RIGHT" arrow to the next block. If the result is incorrect proceed in the direction of the "WRONG" arrow. In this manner follow the diagram until you end in a block where a possible cause of the fault is stated.

The procedure is the same even in a case where the first block is a symptom block. If the symptom given agrees with the actual symptom, proceed in the direction of the "RIGHT" arrow, otherwise in the direction of the "WRONG" arrow.

Certain boxes have headings "ON" or "OFF". This means that the convertor is on or off. Note that the latter <u>does not</u> mean that the convertor is dead.

It should be pointed out that the fault tracing diagrams do not cover all faults which may occur, but should be considered as an aid when looking for "normal" faults.

4.2 Fault Symptoms

Fault symptom	Fault Tracing Diagram No.
Convertor does not start. Main contactor does not close.	1
No load current Main contactor closed	2
High speed fuses blown	3
Motor does not start[1)]	4
Not possible to reverse the current[2)]	5

[1)] Applies only to convertors type YGFD, YHFD

[2)] Applies only to convertors type YHFD, YHBD

4.3
Abbreviations used in Fault Tracing Diagrams

acc.	=	acceleration
AC sup.	=	AC supply
aux. cont.	=	auxiliary contact
aux. trafo.	=	auxiliary transformer
block un.	=	blocking unit
btw	=	between
conn.	=	connection
Cont. un.	=	control unit
Conv.	=	convertor
field cont.	=	field contactor
I-feedb.	=	current feedback
I-lim.	=	current limit
I-reg.	=	current regulator
main cont.	=	main contactor
op.	=	operating
ph. back	=	phase back
ph. forw.	=	phase forward
Power. sup.	=	power supply
Rep.	=	replace
short	=	short circuit
n-reg.	=	speed regulator
term.	=	termination
TPG	=	trigger pulse generator
TP trafo	=	trigger pulse transformer
Uout	=	output voltage
volt	=	voltage

5
FAULT TRACING DIAGRAMS Fault Tracing Diagram No. 1. Applies to YGFD, YHFD, YGBD and YHBD.

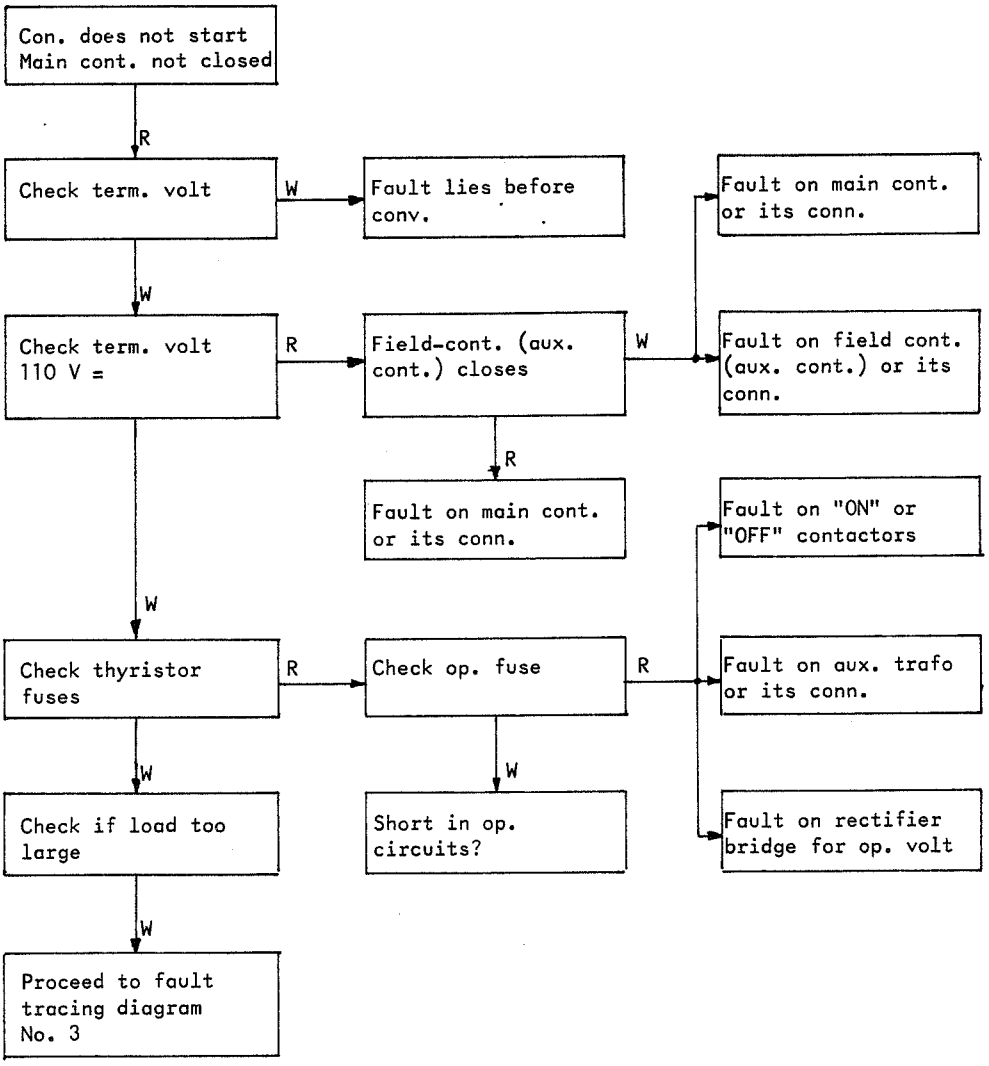

Fault Tracing Diagram No. 2. Applies to YGFD, YHFD, YGBD and YHBD.

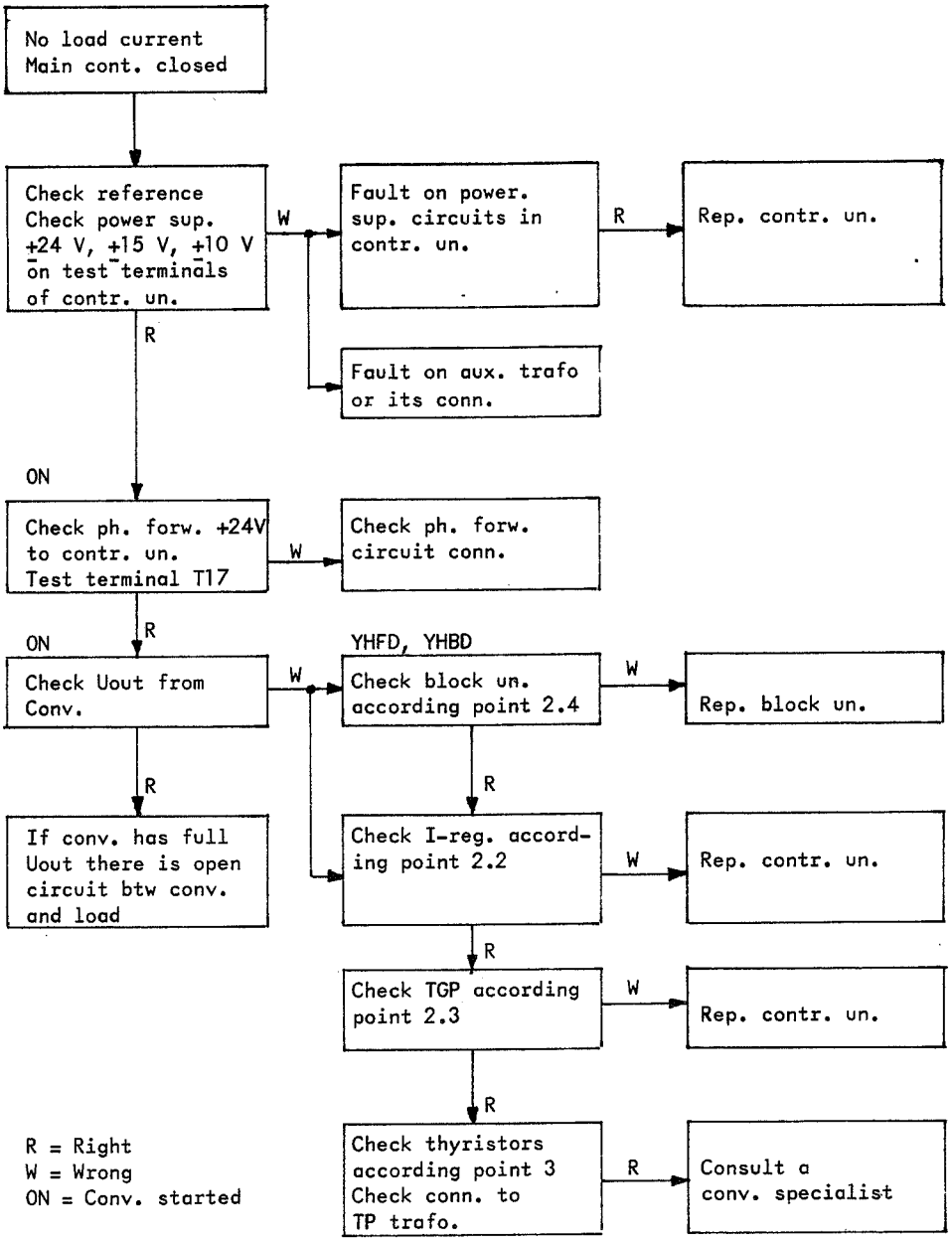

Fault Tracing Diagram No. 3. Applies to YGFD, YHFD, YGBD and YHBD.

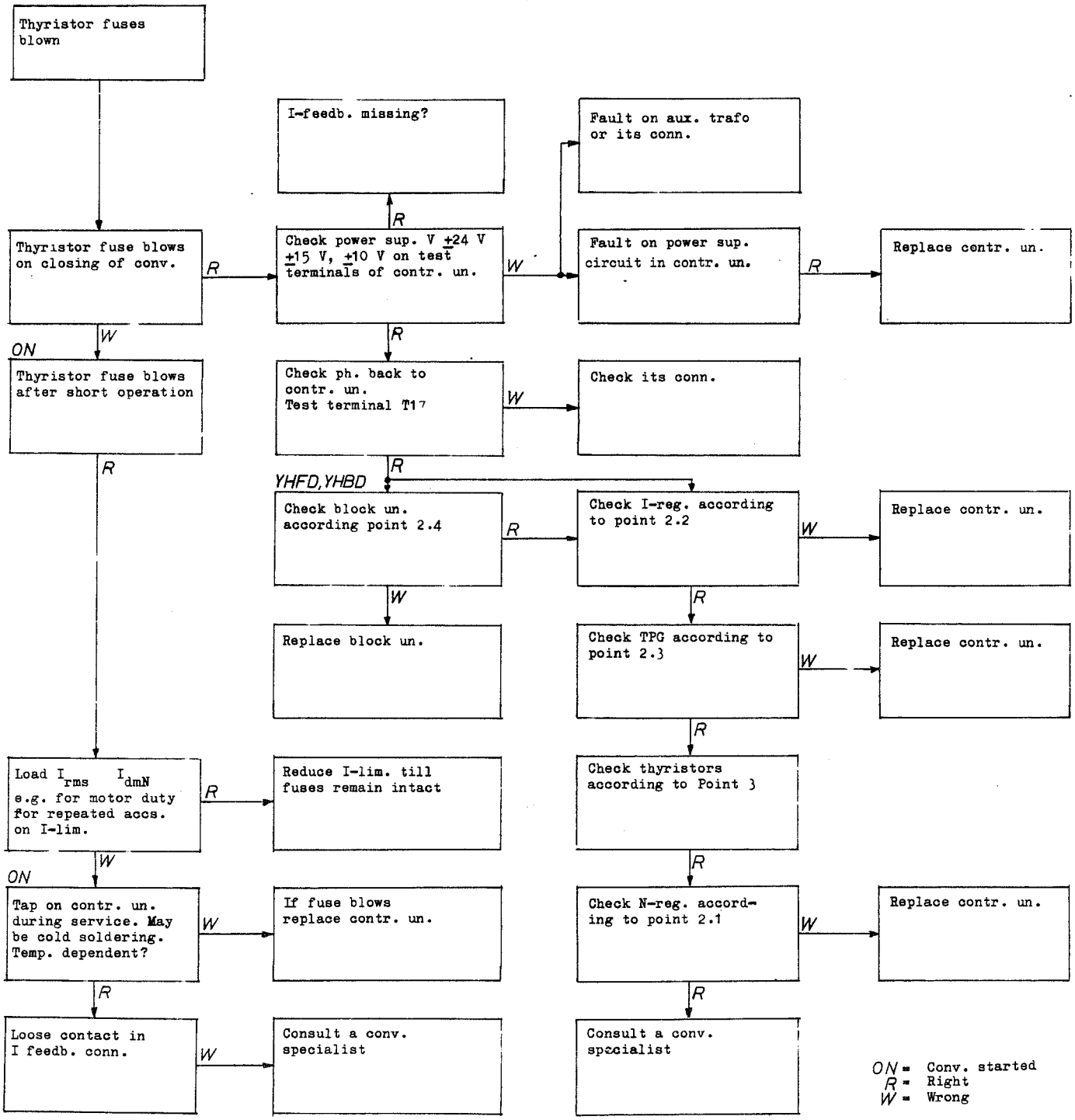

Fault Tracing Diagram No. 4. Applies to YGFD and YHFD.

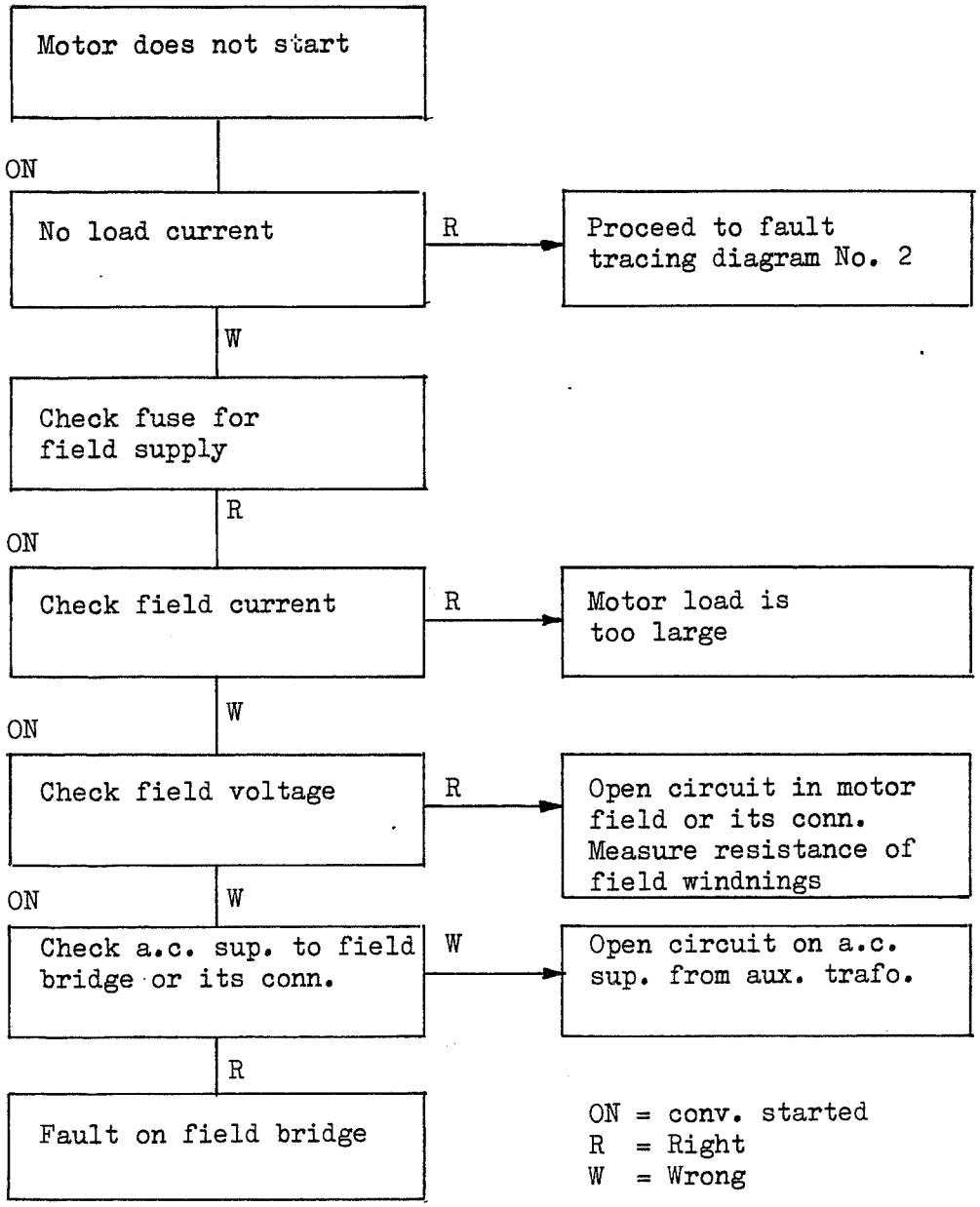

Fault Tracing Diagram No. 5. Applies to YGFD and YHFD.

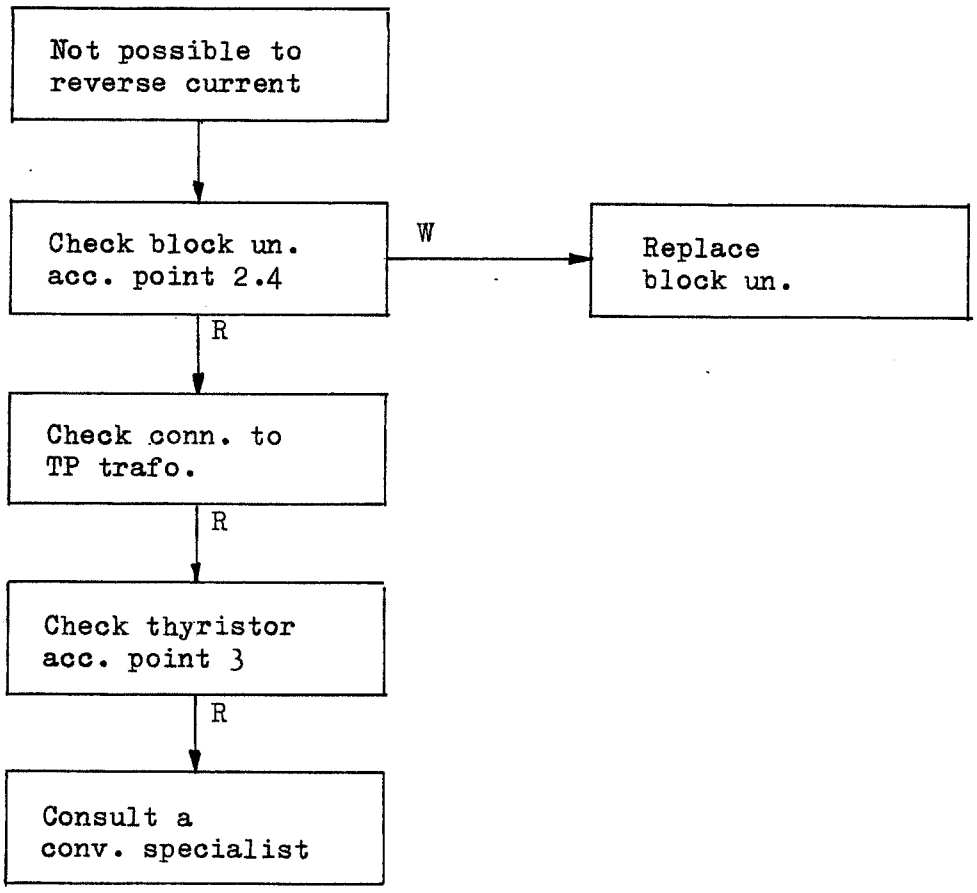

R = Right
W = Wrong

TYRAK® 73
System for DC Motor Drive
Thyristor convertors type YGFD, YGBD and YHBD
Power range 1-13 kW

CONTENTS

8

1 GENERAL

The convertor contains no components which are subjected to what is normally termed wear. Maintenance therefore consist mainly of preventive maintenance.

In addition to the check points given below, the convertor requires general maintenance in order that disturbances in operation do not occur. This part of maintenance can be considered to be common to all electrical equipment used in industry and it is therefore sufficiently well established in the maintenance routine.

2 CHECK POINTS

At certain intervals the convertor should be inspected and the function of some circuits should be checked. The frequency of this maintenance should be determined with regard to the type of operation and to the environment, (occurrence of vibrations, moisture, dust, etc.) at the site of the convertor. Under conditions favourable for the convertor an interval up to one year between inspections may be used.

The following points should be checked:

1 - Contamination

2 - Terminal block connections

3 - Cable connections in the main circuit

4 - Other screwed connections

5 - The various protective functions

6 - Tacho-generator

N.B. Note danger to personnel!

When checking points 1-4 the AC supply to the convertor should be broken.

2.1
Contamination

If the cubicle is contaminated, the cubicle and if necessary the control box, should be cleaned. It is safest to use a vacuum cleaner, but in an emergency compressed air may also be used. If compressed air is used it must be ensured that it does not contain condensed water. During cleaning the convertor must unconditionally be dead! If the convertor is fitted with a dust filter, this should be replaced as required.

After cleaning a visual inspection of the convertor should be made to detect mechanical damage, overheated components, etc.

2.2
Terminal block connections

Tighten all screws in the terminal block and thereafter check that cables are secure by pulling them.

2.3
Cable connections in the main circuit

Tighten all large cable connections on the thyristor module, contactor and overload protection. Tighten also the flexible leads on the thyristors in the thyristor bridge.

2.4
Other screwed connections

Tighten with a screwdriver the other screwed connections (contactors, transformers, etc.).

Check that no cables or leads rub against any sharp object.

Check that there are no loose nuts or screws.

3
PROTECTIVE FUNCTIONS

3.1
Thermal relay, main circuit

Make the convertor dead. Undo the plastic cover on the thermal overload relay.

8

In the left-hand part of every relay there is a bakelite plate (1) in Fig. 3-1 which moves from right to left in the event of an overload tripping. The relay can be reset by pushing in the white arm (2) shown in the Fig.

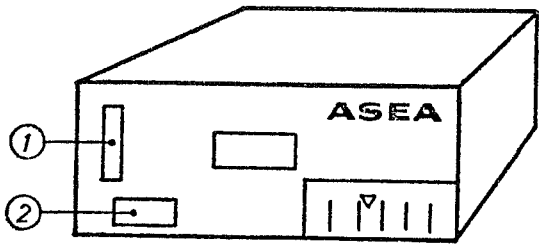

Fig. 3-1

The function of the relays should be checked as follows:

Start the convertor. Note danger to personnel!

By means of a completely isolated object (e.g. a dry wooden pin) push the bakelite plate to the left. The relay should then trip and the output voltage of the convertor will be zero.

Reset the relay.

3.2 Interlocks for closing

If interlocks are used for switching on the convertor their function should be checked by opening the interlocking contact.

4 TACHO-GENERATOR

4.1 Maintenance

The tacho-generator must be maintained in accordance with the instructions of the manufacturer.

Electronics Division, ASEA, S-721 83 Västerås Sweden

4.2
Check of Alignment

The tacho-generator should be mounted without a gearbox and with a bellows coupling coupled direct to the motor shaft.

Tolerances of alignment:

radial	0.5 mm
axial	± 2.0 mm
angular error	0.5°

8