CONNECTION AND SETTING GUIDE

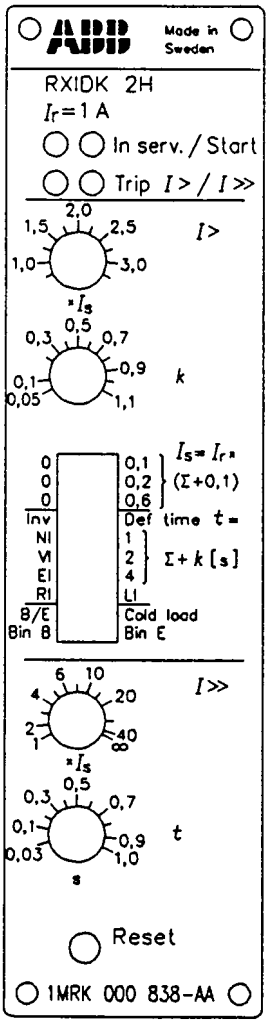

1MRK 000 117-36

Fig. 1 Front layout

Rated current of the relay, I_r (available variants: 0,2 A, 1 A or 5 A)

LED indicators:
In serv. (green): indicates relay in service.
Start (yellow): indicates operation of I> (no time delay).
Trip I> (red): indicates operation of I> after the set time delay.
I>> (red): indicates operation of I>> after the set time delay.

I> (Low set stage):
Potentiometer (P1) for setting of the operate value for the function I>.

Potentiometer (P2) for setting of the inverse time factor k or definite time delay t for the function I>.

10-pole programming switch (S1) for setting of the scale-constant I_S, time-delay characteristic and the binary input function.

I>> (High set stage):

Potentiometer (P3) for setting of the operate value for the function I>>.

Potentiometer (P4) for setting of the definite time-delay t for the function I>>. *)

Reset push-button.

*) The setting ranges are different for the different variants of the relay

All variants except 16Hz :	30 ms - 1,0 s
16Hz :	60 ms - 1,0 s
16Hz alternative version :	60 ms - 5,0 s

CONNECTION:

The RXIDK 2H relay requires a dc-dc converter type RXTUG for the auxiliary voltage supply ±24 V. Connection of voltage RL shall be made only if the binary input is used.

The relay is delivered with a short-circuiting connector RTXK for mounting on the rear of the terminal base. This connector will automatically short-circuit the current input when the relay is removed from its terminal base.

NOTE! The auxiliary voltage supply should be disconnected or the output circuits should be blocked to avoid the risk of unwanted alarm or tripping, before the relay is plugged into or withdrawn from its terminal base.

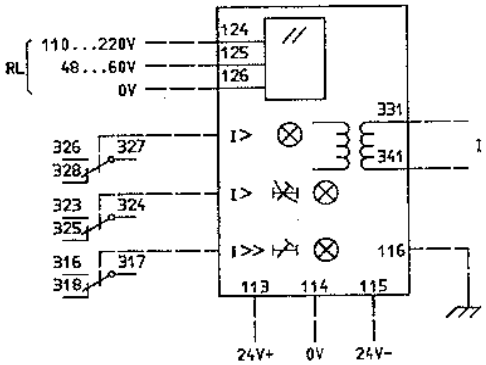

Fig.2 Terminal diagram

SETTING

All settings can be changed while the relay is in normal service.

1. Setting of the scale-constant I_S.
I_S is common for both the low set stage I> and the high set stage I>>.
It is set with the programming switches S1:1, S1:2 and S1:3, from 0,1 to 1,0 times the rated current I_r.
2 Setting of the low set stage operate value I>.
The operate value is set with potentiometer P1 according to I> = P1 x I_s.

3. The low set stage time delay.
The low set stage has six time characteristics, which are programmed on the programming switches S1:4 to S1:8.
Definite-time delay.
Set the programming switch S1:4 to position "Def. time t=", where t=Σ+k. Switches S1:5 to S1:7 are used for the main adjustment, Σ = 0 - 7 s, and potentiometer P2 is used for the fine adjustment k = 0,05 - 1,1 s. The minimum time delay is 50 ms and the maximum time delay is 8,1 s.
When selecting this characteristic, the position of switch S1:8 ("RI" or "LI") has no influence.
Inverse-time delay.
Set switch S1:4 in position "Inv". The inverse-time characteristic is selected with the switches S1:5 to S1:8 (NI = Normal Inverse, VI = Very Inverse, EI = Extremely Inverse, RI = ASEA RI-relay Inverse, LI = Long-time Inverse).
By setting the selector switch S1 a precedence order is applied, from top (S1:5) to bottom (S1:8). That is, if the "NI" characteristic is selected (the switch in the left hand side position), it overrides the settings of switches S1:6 to S1:8. Another example; if the "LI" characteristic shall be used, the switches S1:5 to S1:8 must be in the right hand side position.
After setting the inverse-time characteristic, the time delay is determined by the inverse-time factor k, which is adjusted with potentiometer P2.

4. Setting of the high set stage I>> operate value.
The operate value is set with potentiometer P3 according to I>> = P3 x I_s.
This function can be blocked by setting potentiometer P3 to ”∞".

5. The high set stage time delay.
The time delay for the high set stage (I>>) has a definite-time characteristic. The setting is done with potentiometer P4. *)

6. The binary input.
The binary input is programmable for enabling the relay, blocking the relay or to increase the operate value of the low set stage I> by 40% ("Cold load"). The function is activated when a voltage RL is applied to the binary input.
The settings are done on programming switches S1:9 and S1:10 as follows:
Enable function;
S1:9 in position "B/E" and S1:10 in position "Bin E".
Block function;
S1:9 in position "B/E" and S1:10 in position "Bin B".
Cold load;
S1:9 in position "Cold load". (S1:10 has no influence)
Note! The setting shall be in ”B/E” and "Bin B" positions, if the binary input is not used.

INDICATION

There are four LED indicators. The trip indicators seal-in and are reset manually by the ”Reset” push-button, while the start indicator resets automatically when the relay resets.
When the ”Reset” pushbutton is depressed during normal operating conditions, all LEDs except "In serv." will light up.
When connecting RXIDK 2H to the auxiliary voltage, the relay performs a self test. The ”In serv.” LED is alight, after performing the self test and when the relay is ready for operation. In case of a fault, the LEDs will start flashing .

TRIPPING AND START OUTPUTS

The RXIDK 2H relay has one start and one tripping output for the low set stage, and one trip output for the high set stage. Each output is provided with one change-over contact. All outputs reset automatically when the current decreases to a value below the resetting value of the relay.

ESD

The relay contains electronic circuits which can be damaged if exposed to static electricity. Always avoid to touch the circuit board when the relay cover is removed during the setting procedure.