Relion® 670 series

Phasor measurement unit RES670 Pre-configured Product Guide

Power and productivity
for a better world™

Contents

1. Application

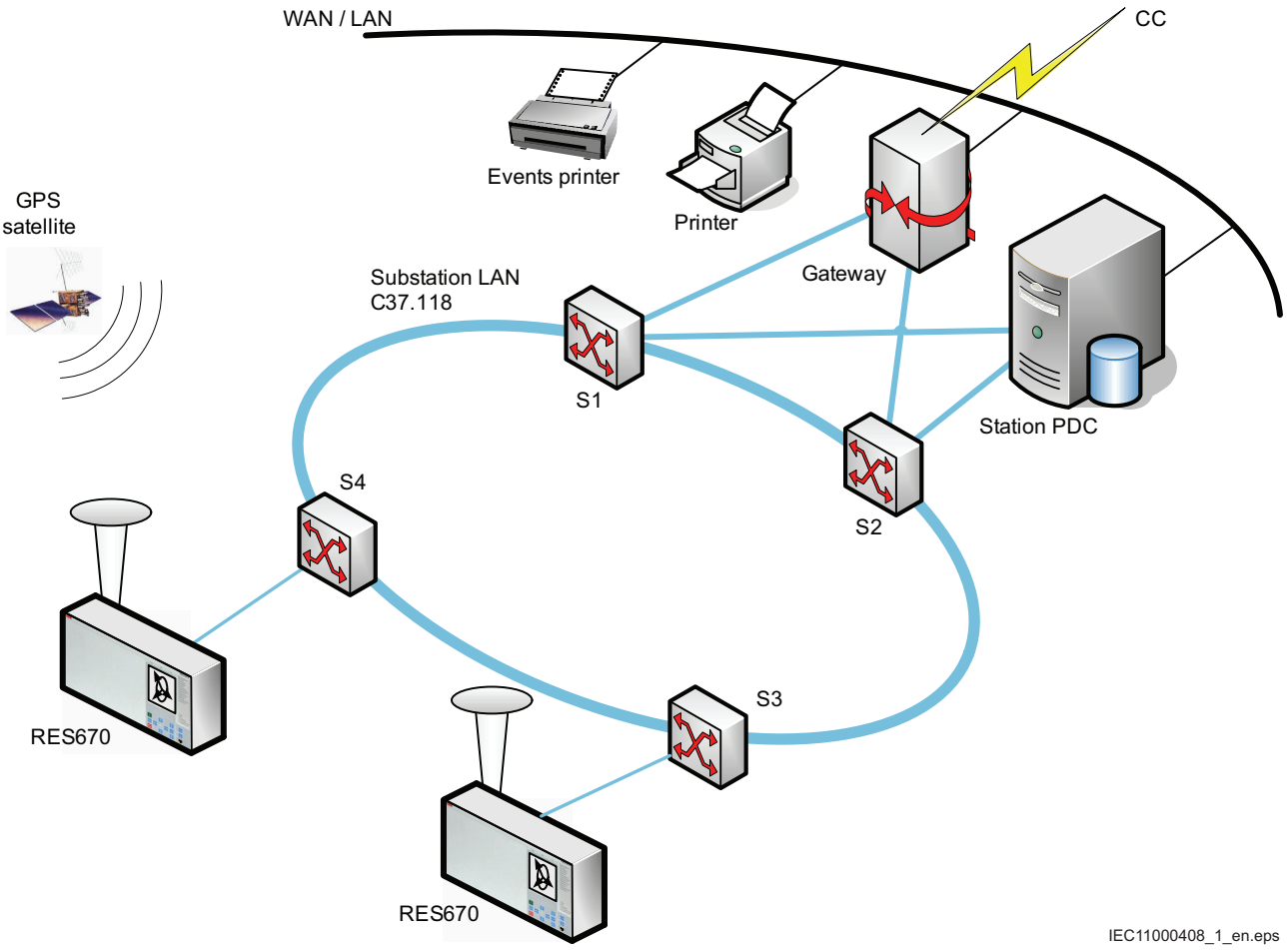

Figure 1. PMUs in a substation

RES 670 is a Phasor Measurement Unit that provides power system AC voltages and currents as phasors, that is as real and imaginary parts or as magnitude and phase angle. The reference for the phase angle is the NavStar Global Positioning System – GPS that also supplies highly accurate time and date. The accurate time tagging of measurements taken at different geographical locations make it possible to derive the phasor quantities. Based on phasors a number of power system applications are available.

Phasor Measurement Units (PMUs) have so far been mainly used for recording and on-line supervision of Wide Area Measurement System (WAMS) applications. In a typical setup, 10-20 PMUs at different locations in a synchronized power network, streams phasor data together with power flow data and frequency, to a data concentrator.

The data concentrator is usually a mass storage with capacity for about one week of data in a FIFO buffer. In case of any disturbance it should be very easy to access the data recorded to support the disturbance analysis process. The phasor data is normally sent from the PMU to the data concentrator at a speed of 25/30 or 50/60 samples per channel and second. The number of sampled channels is typically 10-20. Phasor data is normally understood as the magnitude and phase angle of the positive sequence voltage or current. The common reference for the angle measurement is the GPS system, which provides precise time reference. Since every measurement sent to the data concentrator is time tagged, any angle difference between power system AC quantities can be derived.

Description of A20 configuration

RES670 A20 configuration is applicable for a typical single busbar single breaker arrangement monitoring up to three bays on the busbar. RES670 A20 is delivered in 1/1 and 1/2 of 19" case size. Thus only 12 analog inputs are available. As shown in figure 2, RES670 A20 configuration as a PMU is capable of reporting 4 synchronized phasors; that is, one 3-phase voltage of the busbar and three 3-phase currents of bays 1 to 3. In addition, there are Binary Inputs and

protection function triggers which are reported through PMU. This configuration also includes general back-up protection functions which are mainly intended for alarm purposes. Available functions on A20 are Over Voltage, Under Voltage, Over Frequency, Under Frequency, and Rate of Change of Frequency.

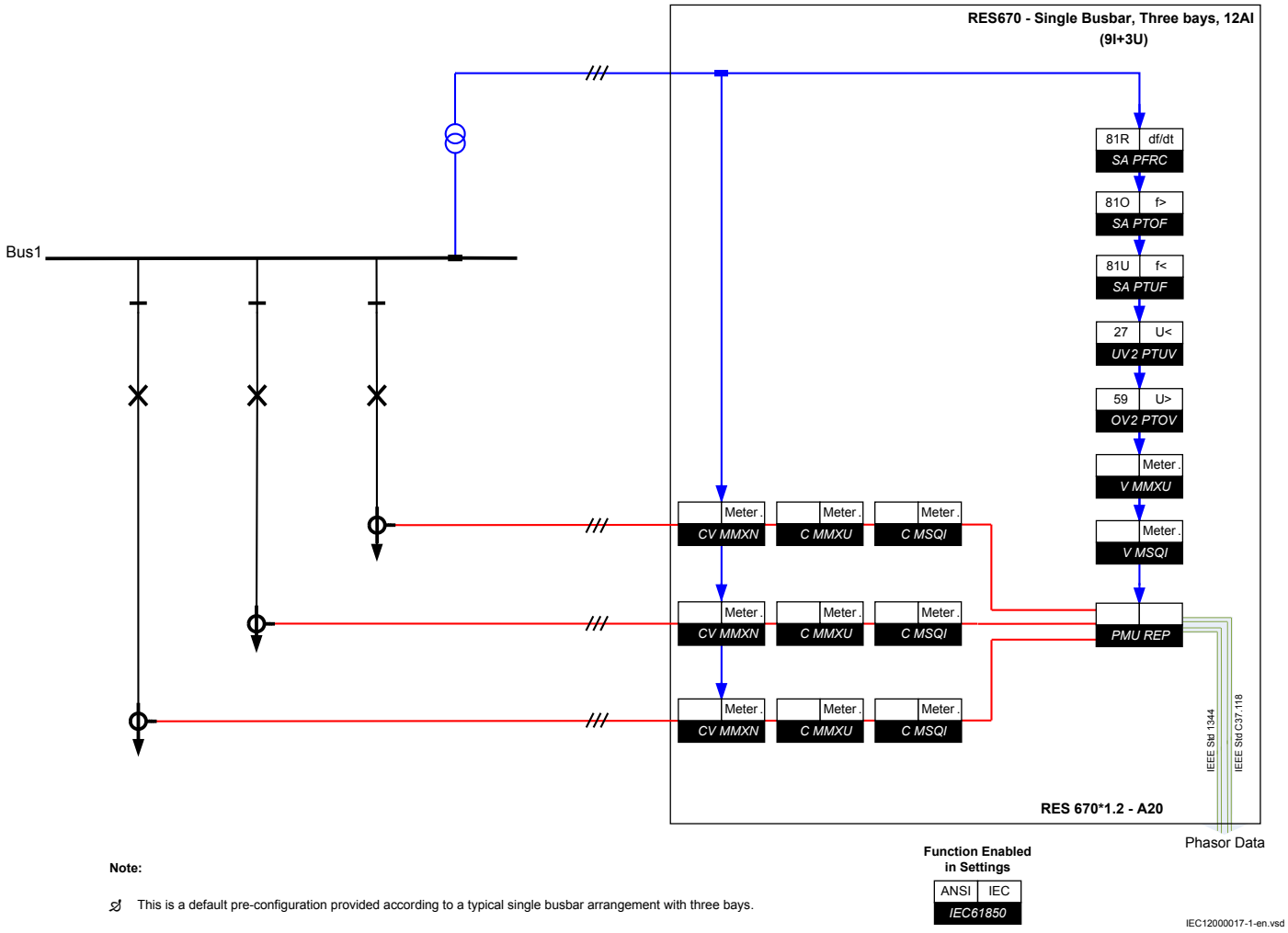

Figure 2. Typical PMU application for single busbar single breaker arrangement monitoring up to three bays, including synchronized phasor reporting and back-up protection, using 12 analog input transformers in full 19" case size.

RES670 A20 function library includes additional functions, which are not configured, such as additional Overcurrent protection functions, additional Multipurpose protection function, and so on. Note that RES670 A20 must be re-configured if any additional functions are used.

Description of configuration B20

RES670 B20 configuration is applicable for a typical double busbar single breaker arrangement monitoring up to six bays on the busbar. RES670 B20 is always delivered in 1/1 of 19" case size. Thus 24 analog inputs are available. As shown in figure 3, RES670 B20 configuration as a PMU is capable of reporting 8 synchronized phasors; that is, two 3-phase voltages from busbar 1 and 2 as well as six 3-phase currents from bays 1 to 6. In addition, there are Binary Inputs and protection function triggers which are reported through PMU. This configuration also includes general back-up protection functions which are mainly intended for alarm purposes. Available functions on B20 are Over Voltage, Under Voltage, Over Frequency, Under Frequency, and Rate of Change of Frequency.

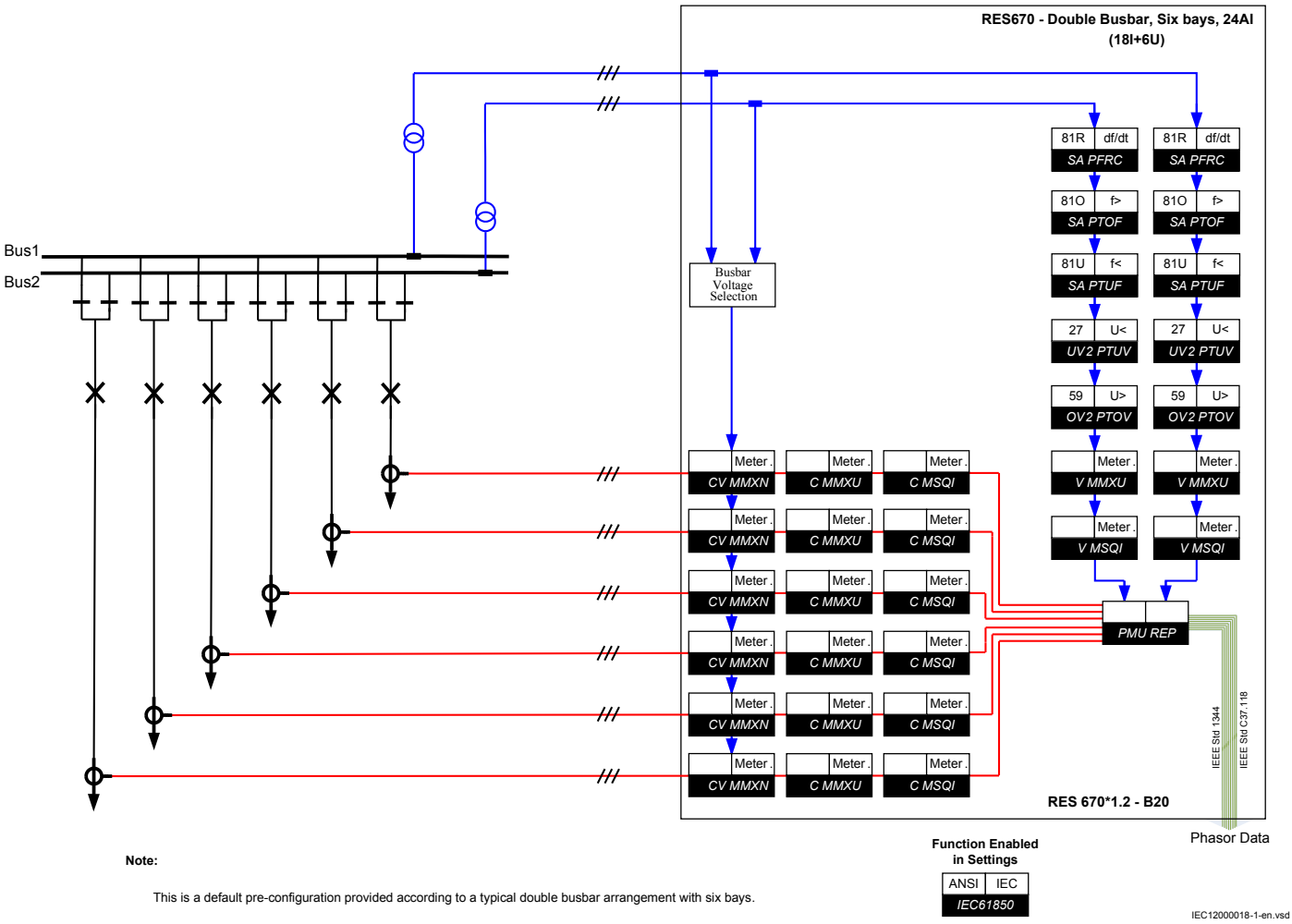

Figure 3. Typical PMU application for double busbar single breaker arrangement monitoring up to 6 bays, including synchronized phasor reporting and back-up protection, using 24 Analog Input transformers in full 19" case size.

As shown in figure 3, in order to provide proper busbar voltage for ServiceValues (CV MMXN Blocks), the Busbar Voltage Selection logic has been implemented in RES670 B20.

RES670 B20 function library includes additional functions, which are not configured, such as additional Overcurrent protection functions, additional Multipurpose protection function, and so on. Note that RES670 B20 must be re-configured if any additional functions are used.

2. Available functions

Wide area measurement functions

IEC 61850	ANSI	Function description	Phasor measurement unit	
			RES670 (A20)	RES670 (B20)
PMUCONF		Configuration parameters for IEEE1344 and C37.118 protocol	1	1
PMUREPORT		Protocol reporting via IEEE1344 and C37.118	'1	1

Back-up protection functions

IEC 61850	ANSI	Function description	Phasor measurement unit	
			RES670 (A20)	RES670 (B20)
Current protection				
OC4PTOC	51_67	Four step phase overcurrent protection	2	2
EF4PTOC	51N_67N	Four step residual overcurrent protection	2–C25	2–C25
NS4PTOC	46I2	Four step directional negative phase sequence overcurrent protection	1–C25	1–C25
SDEPSDE	67N	Sensitive directional residual overcurrent and power protection	1–C25	1–C25
LPPTR	26	Thermal overload protection, one time constant	1–C25	1–C25
Voltage protection				
UV2PTUV	27	Two step undervoltage protection	1	2
OV2PTOV	59	Two step overvoltage protection	1	2
Frequency protection				
SAPTUF	81	Underfrequency protection	1	2
SAPTOF	81	Overfrequency protection	1	2
SAPFRC	81	Rate-of-change frequency protection	1	2
Multipurpose protection				
CVGAPC		General current and voltage protection	8–F03	8–F03

Control and monitoring functions

IEC 61850	ANSI	Function description	Phasor measurement unit	
			RES670 (A20)	RES670 (B20)
Control				
QCBAY		Apparatus control	1	1
LOCREM		Handling of LRswitch positions	1	1
LOCREMCTRL		LHMI control of PSTO	1	1
SLGGIO		Logic rotating switch for function selection and LHMI presentation	15	15
VSGGIO		Selector mini switch	20	20
DPGGIO		IEC61850 generic communication I/O functions	16	16
SPC8GGIO		Single pole generic control 8 signals	5	5
AutomationBits		AutomationBits, command function for DNP3.0	3	3
SingleCommand16Signals		Single command, 16 signals		
Secondary system supervision				
CCSRDIF	87	Current circuit supervision	3–G01	5–G02
SDDRFUF		Fuse failure supervision	1–G01	2–G02
Logic				
SMPPTRC	94	Tripping logic	1	1
TMAGGIO		Trip matrix logic	12	12
		Configuration logic blocks	40–280	40–280
B16I		Boolean 16 to Integer conversion	16	16
B16IFCVI		Boolean 16 to Integer conversion with Logic Node representation	16	16
IB16		Integer to Boolean 16 conversion	16	16
Monitoring				
CVMMXN		Measurements	6	6
EVENT		Event function	20	20
DRPRDRE		Disturbance report	1	1
SPGGIO		IEC61850 generic communication I/O functions	64	64
SP16GGIO		IEC61850 generic communication I/O functions 16 inputs	16	16
MVGGIO		IEC61850 generic communication I/O functions	24	24
BSStatReport		Logical signal status report	3	3
RANGE_XP		Measured value expander block	66	66

IEC 61850	ANSI	Function description	Phasor measurement unit	
			RES670 (A20)	RES670 (B20)
Metering				
PCGGIO		Pulse-counter logic	16	16
ETPMMTR		Function for energy calculation and demand handling	6	6

Designed to communicate

IEC 61850	ANSI	Function description	Phasor meausement unit	
			RES670 (A20)	RES670 (B20)
Station communication				
		SPA communication protocol		
		LON communication protocol		
		IEC60870-5-103 communication protocol		
		Operation selection between SPA and IEC60870-5-103 for SLM		
		DNP3.0 for TCP/IP and EIA-485 communication protocol	1	1
		DNP3.0 fault records for TCP/IP and EIA-485 communication protocol	1	1
		Parameter setting function for IEC61850	1	1
		Goose binary receive	10	10
		Multiple command and transmit	60/10	60/10
		Ethernet configuration of links	1	1
DUODRV		Duo driver configuration		
		IEC 62439-3 Edition 2 parallel redundancy protocol		

Basic IED functions

IEC 61850	Function description	
Basic functions included in all products		
IntErrorSig	Self supervision with internal event list	1
TIME	Time and synchronization error	1
TimeSynch	Time synchronization	1
ActiveGroup	Parameter setting groups	1
Test	Test mode functionality	1
ChangeLock	Change lock function	1
TerminalID	IED identifiers	1
Productinfo	Product information	1
MiscBaseCommon	Misc Base Common	1
IEDRuntimeComp	IED Runtime Comp	1
RatedFreq	Rated system frequency	1
SMBI	Signal Matrix for binary inputs	40
SMBO	Signal Matrix for binary outputs	40
SMMI	Signal Matrix for mA inputs	4
SMAI	Signal Matrix for analog inputs	36
Sum3Ph	Summation block 3 phase	18
LocalHMI	Parameter setting function for HMI in PCM600	1
LocalHMI	Local HMI signals	1
AuthStatus	Authority status	1
AuthorityCheck	Authority check	1
AccessFTP	FTP access with password	1
SPACommMap	SPA communication mapping	1
DOSFRNT	Denial of service, frame rate control for front port	1
DOSOEMAB	Denial of service, frame rate control for OEM port AB	1
DOSOEMCD	Denial of service, frame rate control for OEM port CD	1

3. Wide area measurement system

Configuration parameters for IEEE1344 and C37.118 protocol PMUCONF

The Configuration parameters for IEEE 1344 and C37.118 protocol PMUCONF protocol contains:

- Data about the particular RES670 IED in the PMU synchrophasor streaming network. For example, IP address, id, communication port.
- Format of the data streamed through the protocol. For example, polar, rectangular, float or integer.

Protocol reporting via IEEE 1344 and C37.118 PMUREPORT

The phasor measurement reporting block moves the phasor calculations into a C37.118 frame which contains data about PMU configuration, analog values, binary signal indications and information about time synchronization quality.

The message generated by the PMUREPORT function block is set in accordance with the standard IEEE 1344 protocol for further process.

The phasor measurement reporting block has settings that allows the user to use one phasor to report the voltage or a

current phasor. There are also settings for positive or negative sequence phasors, reporting rate and phasor representation (polar or rectangular).

Phasor data can be reported to up to 8 phasor data concentrators over TCP. It is also possible to use UDP for multicast transmission of phasor data.

4. Current protection

Four step phase overcurrent protection OC4PTOC

The four step phase overcurrent protection function OC4PTOC has an inverse or definite time delay independent for step 1 and 4 separately. Step 2 and 3 are always definite time delayed.

All IEC and ANSI inverse time characteristics are available together with an optional user defined time characteristic.

The directional function is voltage polarized with memory. The function can be set to be directional or non-directional independently for each of the steps.

Second harmonic blocking level can be set for the function and can be used to block each step individually

Four step residual overcurrent protection, zero sequence and negative sequence direction EF4PTOC

The four step residual overcurrent protection EF4PTOC has an inverse or definite time delay independent for each step separately.

All IEC and ANSI time-delayed characteristics are available together with an optional user defined characteristic.

EF4PTOC can be set directional or non-directional independently for each of the steps.

IDir, UPol and IPol can be independently selected to be either zero sequence or negative sequence.

Second harmonic blocking can be set individually for each step.

EF4PTOC can be used as main protection for phase-to-earth faults.

EF4PTOC can also be used to provide a system back-up for example, in the case of the primary protection being out of service due to communication or voltage transformer circuit failure.

Directional operation can be combined together with corresponding communication logic in permissive or blocking teleprotection scheme. Current reversal and weak-end infeed functionality are available as well.

EF4PTOC can be configured to measure the residual current from the three-phase current inputs or the current from a separate current input.

Four step negative sequence overcurrent protection NS4PTOC

Four step negative sequence overcurrent protection (NS4PTOC) has an inverse or definite time delay independent for each step separately.

All IEC and ANSI time delayed characteristics are available together with an optional user defined characteristic.

The directional function is voltage polarized or dual polarized.

NS4PTOC can be set directional or non-directional independently for each of the steps.

NS4PTOC can be used as main protection for unsymmetrical fault; phase-phase short circuits, phase-phase-earth short circuits and single phase earth faults.

NS4PTOC can also be used to provide a system back-up for example, in the case of the primary protection being out of service due to communication or voltage transformer circuit failure.

Directional operation can be combined together with corresponding communication logic in permissive or blocking teleprotection scheme. The same logic as for directional zero sequence current can be used. Current reversal and weak-end infeed functionality are available.

Sensitive directional residual overcurrent and power protection SDEPSDE

In isolated networks or in networks with high impedance earthing, the earth fault current is significantly smaller than the short circuit currents. In addition to this, the magnitude of the fault current is almost independent on the fault location in the network. The protection can be selected to use either the residual current or residual power component 3U0·3I0·cos φ, for operating quantity with maintained short circuit capacity. There is also available one nondirectional 3I0 step and one 3U0 overvoltage tripping step.

No specific sensitive current input is needed.SDEPSDE can be set as low 0.25% of IBase.

Thermal overload protection, one time constant LPTTR

The increasing utilizing of the power system closer to the thermal limits has generated a need of a thermal overload protection also for power lines.

A thermal overload will often not be detected by other protection functions and the introduction of the thermal overload protection can allow the protected circuit to operate closer to the thermal limits.

The three-phase current measuring protection has an I^2t characteristic with settable time constant and a thermal memory..

An alarm level gives early warning to allow operators to take action well before the line is tripped.

5. Voltage protection

Two step undervoltage protection UV2PTUV

Undervoltages can occur in the power system during faults or abnormal conditions. Two step undervoltage protection (UV2PTUV) function can be used to open circuit breakers to prepare for system restoration at power outages or as long-time delayed back-up to primary protection.

UV2PTUV has two voltage steps, each with inverse or definite time delay.

Two step overvoltage protection OV2PTOV

Overvoltages may occur in the power system during abnormal conditions such as sudden power loss, tap changer regulating failures, open line ends on long lines etc.

OV2PTOV has two voltage steps, each of them with inverse or definite time delayed.

OV2PTOV has an extremely high reset ratio to allow settings close to system service voltage.

6. Frequency protection

Underfrequency protection SAPTUF

Underfrequency occurs as a result of a lack of generation in the network.

Underfrequency protection SAPTUF is used for load shedding systems, remedial action schemes, gas turbine startup and so on.

SAPTUF is also provided with undervoltage blocking.

The operation is based on positive sequence voltage measurement and requires two phase-phase or three phase-neutral voltages to be connected. For information about how to connect analog inputs, refer to Application manual/IED application/Analog inputs/Setting guidelines

Overfrequency protection SAPTOF

Overfrequency protection function SAPTOF is applicable in all situations, where reliable detection of high fundamental power system frequency is needed.

Overfrequency occurs because of sudden load drops or shunt faults in the power network. Close to the generating plant, generator governor problems can also cause over frequency.

SAPTOF is used mainly for generation shedding and remedial action schemes. It is also used as a frequency stage initiating load restoring.

SAPTOF is provided with an undervoltage blocking.

The operation is based on positive sequence voltage measurement and requires two phase-phase or three phase-neutral voltages to be connected. For information about how to connect analog inputs, refer to Application manual/IED application/Analog inputs/Setting guidelines

Rate-of-change frequency protection SAPFRC

Rate-of-change frequency protection function (SAPFRC) gives an early indication of a main disturbance in the system. SAPFRC can be used for generation shedding, load shedding and remedial action schemes. SAPFRC can discriminate between positive or negative change of frequency.

SAPFRC is provided with an undervoltage blocking. The operation is based on positive sequence voltage measurement and requires two phase-phase or three phase-neutral voltages to be connected. For information about how to connect analog inputs, refer to Application manual/IED application/Analog inputs/Setting guidelines.

7. Multipurpose protection

General current and voltage protection CVGAPC

The General current and voltage protection (CVGAPC) can be utilized as a negative sequence current protection detecting unsymmetrical conditions such as open phase or unsymmetrical faults.

CVGAPC can also be used to improve phase selection for high resistive earth faults, outside the distance protection reach, for the transmission line. Three functions are used, which measures the neutral current and each of the three phase voltages. This will give an independence from load currents and this phase selection will be used in conjunction with the detection of the earth fault from the directional earth fault protection function.

8. Secondary system supervision

Current circuit supervision CCSRDIF

Open or short circuited current transformer cores can cause unwanted operation of many protection functions such as differential, earth-fault current and negative-sequence current functions.

It must be remembered that a blocking of protection functions at an occurrence of open CT circuit will mean that the situation will remain and extremely high voltages will stress the secondary circuit.

Current circuit supervision (CCSRDIF) compares the residual current from a three phase set of current transformer cores with the neutral point current on a separate input taken from another set of cores on the current transformer.

A detection of a difference indicates a fault in the circuit and is used as alarm or to block protection functions expected to give unwanted tripping.

Fuse failure supervision SDDRFUF

The aim of the fuse failure supervision function (SDDRFUF) is to block voltage measuring functions at failures in the secondary circuits between the voltage transformer and the IED in order to avoid unwanted operations that otherwise might occur.

The fuse failure supervision function basically has three different algorithms, negative sequence and zero sequence based algorithms and an additional delta voltage and delta current algorithm.

The negative sequence detection algorithm is recommended for IEDs used in isolated or high-impedance earthed networks. It is based on the negative-sequence measuring quantities, a high value of voltage $3U_2$ without the presence of the negative-sequence current $3I_2$.

The zero sequence detection algorithm is recommended for IEDs used in directly or low impedance earthed networks. It is based on the zero sequence measuring quantities, a high value of voltage $3U_0$ without the presence of the residual current $3I_0$.

For better adaptation to system requirements, an operation mode setting has been introduced which makes it possible to select the operating conditions for negative sequence and zero sequence based function. The selection of different operation modes makes it possible to choose different interaction possibilities between the negative sequence and zero sequence based algorithm.

A criterion based on delta current and delta voltage measurements can be added to the fuse failure supervision function in order to detect a three phase fuse failure, which in practice is more associated with voltage transformer switching during station operations.

9. Control

Logic rotating switch for function selection and LHMI presentation SLGGIO

The logic rotating switch for function selection and LHMI presentation (SLGGIO) (or the selector switch function block) is used to get a selector switch functionality similar to the one provided by a hardware selector switch. Hardware selector switches are used extensively by utilities, in order to have different functions operating on pre-set values. Hardware switches are however sources for maintenance issues, lower system reliability and an extended purchase portfolio. The logic selector switches eliminate all these problems.

Selector mini switch VSGGIO

The Selector mini switch VSGGIO function block is a multipurpose function used for a variety of applications, as a general purpose switch.

VSGGIO can be controlled from the menu or from a symbol on the single line diagram (SLD) on the local HMI.

IEC 61850 generic communication I/O functions DPGGIO

The IEC 61850 generic communication I/O functions (DPGGIO) function block is used to send double indications to other systems or equipment in the substation. It is especially used in the interlocking and reservation station-wide logics.

Single point generic control 8 signals SPC8GGIO

The Single point generic control 8 signals (SPC8GGIO) function block is a collection of 8 single point commands, designed to bring in commands from REMOTE (SCADA) to those parts of the logic configuration that do not need extensive command receiving functionality (for example, SCSWI). In this way, simple commands can be sent directly to the IED outputs, without confirmation. Confirmation (status) of the result of the commands is supposed to be achieved by other means, such as binary inputs and SPGGIO function blocks. The commands can be pulsed or steady.

AutomationBits, command function for DNP3.0 AUTOBITS

AutomationBits function for DNP3 (AUTOBITS) is used within PCM600 to get into the configuration of the commands coming through the DNP3 protocol. The AUTOBITS function plays the same role as functions GOOSEBINRCV (for IEC 61850) and MULTICMDRCV (for LON).

Single command, 16 signals

The IEDs can receive commands either from a substation automation system or from the local HMI. The command function block has outputs that can be used, for example, to control high voltage apparatuses or for other user defined functionality.

10. Logic

Tripping logic SMPPTRC

A function block for protection tripping is provided for each circuit breaker involved in the tripping of the fault. It provides a settable pulse prolongation to ensure a trip pulse of sufficient length, as well as all functionality necessary for correct co-operation with autoreclosing functions.

The trip function block also includes a settable latch functionality for evolving faults and breaker lock-out.

Trip matrix logic TMAGGIO

Trip matrix logic TMAGGIO function is used to route trip signals and other logical output signals to different output contacts on the IED.

TMAGGIO output signals and the physical outputs allows the user to adapt the signals to the physical tripping outputs according to the specific application needs.

Configurable logic blocks

A number of logic blocks and timers are available for the user to adapt the configuration to the specific application needs.

- OR function block.
- INVERTER function blocks that inverts the input signal.
- PULSETIMER function block can be used, for example, for pulse extensions or limiting of operation of outputs, settable pulse time.
- GATE function block is used for whether or not a signal should be able to pass from the input to the output.
- XOR function block.
- LOOPDELAY function block used to delay the output signal one execution cycle.
- TIMERSET function has pick-up and drop-out delayed outputs related to the input signal. The timer has a settable time delay.
- AND function block.
- SRMEMORY function block is a flip-flop that can set or reset an output from two inputs respectively. Each block has two outputs where one is inverted. The memory setting controls if the block's output should reset or return to the state it was, after a power interruption. Set input has priority.
- RSMEMORY function block is a flip-flop that can reset or set an output from two inputs respectively. Each block has two outputs where one is inverted. The memory setting controls if the block's output should reset or return to the state it was, after a power interruption. RESET input has priority.

Fixed signal function block

The Fixed signals function (FXDSIGN) generates a number of pre-set (fixed) signals that can be used in the configuration of an IED, either for forcing the unused inputs in other function blocks to a certain level/value, or for creating certain logic.

11. Monitoring

Measurements CVMMXN, CMMXU, VNMMXU, VMMXU, CMSQI, VMSQI

The measurement functions are used to get on-line information from the IED. These service values make it possible to display on-line information on the local HMI and on the Substation automation system about:

- measured voltages, currents, frequency, active, reactive and apparent power and power factor
- primary and secondary phasors
- positive, negative and zero sequence currents and voltages
- mA, input currents
- pulse counters

Supervision of mA input signals

The main purpose of the function is to measure and process signals from different measuring transducers. Many devices used in process control represent various parameters such as frequency, temperature and DC battery voltage as low current values, usually in the range 4-20 mA or 0-20 mA.

Alarm limits can be set and used as triggers, e.g. to generate trip or alarm signals.

The function requires that the IED is equipped with the mA input module.

Event counter CNTGGIO

Event counter (CNTGGIO) has six counters which are used for storing the number of times each counter input has been activated.

Disturbance report DRPRDRE

Complete and reliable information about disturbances in the primary and/or in the secondary system together with continuous event-logging is accomplished by the disturbance report functionality.

Disturbance report , always included in the IED, acquires sampled data of all selected analog input and binary signals connected to the function block with a, maximum of 40 analog and 96 binary signals.

The Disturbance report functionality is a common name for several functions:

- Event list
- Indications
- Event recorder
- Trip value recorder
- Disturbance recorder

The Disturbance report function is characterized by great flexibility regarding configuration, starting conditions, recording times, and large storage capacity.

A disturbance is defined as an activation of an input to the AxRADR or BxRBDR function blocks, which are set to trigger the disturbance recorder. All signals from start of pre-fault time to the end of post-fault time will be included in the recording.

Every disturbance report recording is saved in the IED in the standard Comtrade format. The same applies to all events, which are continuously saved in a ring-buffer. The local HMI is

used to get information about the recordings. The disturbance report files may be uploaded to PCM600 for further analysis using the disturbance handling tool.

Event list DRPRDRE

Continuous event-logging is useful for monitoring the system from an overview perspective and is a complement to specific disturbance recorder functions.

The event list logs all binary input signals connected to the Disturbance report function. The list may contain up to 1000 time-tagged events stored in a ring-buffer.

Indications DRPRDRE

To get fast, condensed and reliable information about disturbances in the primary and/or in the secondary system it is important to know, for example binary signals that have changed status during a disturbance. This information is used in the short perspective to get information via the local HMI in a straightforward way.

There are three LEDs on the local HMI (green, yellow and red), which will display status information about the IED and the Disturbance report function (triggered).

The Indication list function shows all selected binary input signals connected to the Disturbance report function that have changed status during a disturbance.

Event recorder DRPRDRE

Quick, complete and reliable information about disturbances in the primary and/or in the secondary system is vital, for example, time-tagged events logged during disturbances. This information is used for different purposes in the short term (for example corrective actions) and in the long term (for example functional analysis).

The event recorder logs all selected binary input signals connected to the Disturbance report function. Each recording can contain up to 150 time-tagged events.

The event recorder information is available for the disturbances locally in the IED.

The event recording information is an integrated part of the disturbance record (Comtrade file).

Trip value recorder DRPRDRE

Information about the pre-fault and fault values for currents and voltages are vital for the disturbance evaluation.

The Trip value recorder calculates the values of all selected analog input signals connected to the Disturbance report function. The result is magnitude and phase angle before and during the fault for each analog input signal.

The trip value recorder information is available for the disturbances locally in the IED.

The trip value recorder information is an integrated part of the disturbance record (Comtrade file).

Disturbance recorder DRPRDRE

The Disturbance recorder function supplies fast, complete and reliable information about disturbances in the power system. It facilitates understanding system behavior and related primary and secondary equipment during and after a disturbance. Recorded information is used for different purposes in the short perspective (for example corrective actions) and long perspective (for example functional analysis).

The Disturbance recorder acquires sampled data from selected analog- and binary signals connected to the Disturbance report function (maximum 40 analog and 96 binary signals). The binary signals available are the same as for the event recorder function.

The function is characterized by great flexibility and is not dependent on the operation of protection functions. It can record disturbances not detected by protection functions. Up to ten seconds of data before the trigger instant can be saved in the disturbance file.

The disturbance recorder information for up to 100 disturbances are saved in the IED and the local HMI is used to view the list of recordings.

Event function

When using a Substation Automation system with LON or SPA communication, time-tagged events can be sent at change or cyclically from the IED to the station level. These events are created from any available signal in the IED that is connected to the Event function (EVENT). The event function block is used for LON and SPA communication.

Analog and double indication values are also transferred through EVENT function.

IEC61850 generic communication I/O function SPGGIO

IEC61850 generic communication I/O functions (SPGGIO) is used to send one single logical signal to other systems or equipment in the substation.

IEC61850 generic communication I/O functions MVGGIO

IEC61850 generic communication I/O functions (MVGGIO) function is used to send the instantaneous value of an analog signal to other systems or equipment in the substation. It can also be used inside the same IED, to attach a RANGE aspect to an analog value and to permit measurement supervision on that value.

Measured value expander block RANGE_XP

The current and voltage measurements functions (CVMMXN, CMMXU, VMMXU and VNMMXU), current and voltage sequence measurement functions (CMSQI and VMSQI) and IEC 61850 generic communication I/O functions (MVGGIO) are provided with measurement supervision functionality. All measured values can be supervised with four settable limits:

low-low limit, low limit, high limit and high-high limit. The measure value expander block (RANGE_XP) has been introduced to enable translating the integer output signal from the measuring functions to 5 binary signals: below low-low limit, below low limit, normal, above high-high limit or above high limit. The output signals can be used as conditions in the configurable logic or for alarming purpose.

12. Metering

Pulse counter logic PCGGIO

Pulse counter (PCGGIO) function counts externally generated binary pulses, for instance pulses coming from an external energy meter, for calculation of energy consumption values. The pulses are captured by the binary input module and then read by the function. A scaled service value is available over the station bus. The special Binary input module with enhanced pulse counting capabilities must be ordered to achieve this functionality.

Function for energy calculation and demand handling ETPMMTR

Outputs from the Measurements (CVMMXN) function can be used to calculate energy consumption. Active as well as reactive values are calculated in import and export direction. Values can be read or generated as pulses. Maximum demand power values are also calculated by the function.

13. Basic IED functions

Time synchronization

The time synchronization source selector is used to select a common source of absolute time for the IED when it is a part of a protection system. This makes it possible to compare event and disturbance data between all IEDs in a station automation system.

Only GPS and IRIG-B time synchronization sources are acceptable for phasor measurement from the accuracy point of view, and RES670 supports both.

14. Human machine interface

Human machine interface

The local human machine interface is available in a medium sized model. Up to 12 single line diagram pages can be defined, depending on the product capability.

The local HMI is divided into zones with different functionality.

- Status indication LEDs.
- Alarm indication LEDs, which consist of 15 LEDs (6 red and 9 yellow) with user printable label. All LEDs are configurable from PCM600.
- Liquid crystal display (LCD).
- Keypad with push buttons for control and navigation purposes, switch for selection between local and remote control and reset.
- Isolated RJ45 communication port.

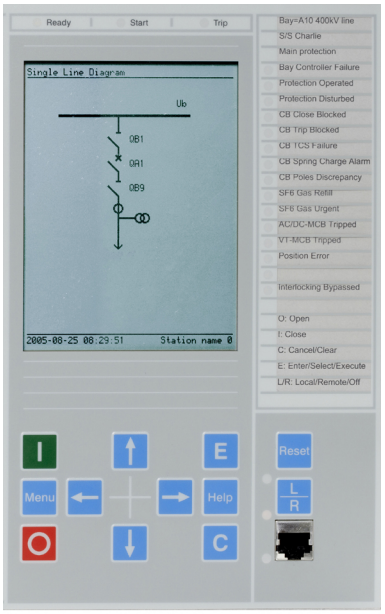

en05000056.jpg

Figure 4. Example of medium graphic HMI

15. Station communication

IEC 61850-8-1 communication protocol

The IED is equipped with double optical Ethernet rear ports for IEC 61850-8-1 station bus communication. IEC 61850-8-1 protocol allows intelligent electrical devices (IEDs) from different vendors to exchange information and simplifies system engineering. Peer-to-peer communication according to GOOSE is part of the standard. Disturbance files uploading is provided.

DNP3.0 communication protocol

An electrical RS485 and an optical Ethernet port is available for the DNP3.0 communication. DNP3.0 Level 2 communication with unsolicited events, time synchronizing and disturbance reporting is provided for communication to RTUs, Gateways or HMI systems.

Multiple command and transmit

When 670 IED's are used in Substation Automation systems with LON, SPA or IEC60870-5-103 communication protocols the Event and Multiple Command function blocks are used as

the communication interface for vertical communication to station HMI and gateway and as interface for horizontal peer-to-peer communication (over LON only).

IEC 62439-3 Parallel Redundant Protocol

Redundant station bus communication according to IEC 62439-3 Edition 1 and IEC 62439-3 Edition 2 are available as options in 670 series IEDs. IEC 62439-3 parallel redundant protocol is an optional quantity and the selection is made at ordering. Redundant station bus communication according to IEC 62439-3 uses both port AB and port CD on the OEM module.

16. Hardware description

Hardware modules

Power supply module PSM

The power supply module is used to provide the correct internal voltages and full isolation between the terminal and the battery system. An internal fail alarm output is available.

Binary input module BIM

The binary input module has 16 optically isolated inputs and is available in two versions, one standard and one with enhanced pulse counting capabilities on the inputs to be used with the pulse counter function. The binary inputs are freely programmable and can be used for the input of logical signals to any of the functions. They can also be included in the disturbance recording and event-recording functions. This enables extensive monitoring and evaluation of operation of the IED and for all associated electrical circuits.

Binary output module BOM

The binary output module has 24 independent output relays and is used for trip output or any signaling purpose.

Static binary output module SOM

The static binary output module has six fast static outputs and six change over output relays for use in applications with high speed requirements.

mA input module MIM

The milli-ampere input module is used to interface transducer signals in the –20 to +20 mA range from for example OLTC position, temperature or pressure transducers. The module has six independent, galvanically separated channels.

Optical ethernet module OEM

The optical fast-ethernet module is used to connect an IED to the communication buses (like the station bus) that use the IEC 61850-8-1 protocol (port A, B). The module has two optical ports with ST connectors.

Galvanic RS485 serial communication module

The Galvanic RS485 communication module (RS485) is used for DNP3.0 communication. The module has one RS485 communication port. The RS485 is a balanced serial communication that can be used either in 2-wire or 4-wire connections. A 2-wire connection uses the same signal for RX and TX and is a multidrop communication with no dedicated Master or slave. This variant requires however a control of the output. The 4-wire connection has separated signals for RX and TX multidrop communication with a dedicated Master and the rest are slaves. No special control signal is needed in this case.

GPS time synchronization module GTM

This module includes a GPS receiver used for time synchronization. The GPS has one SMA contact for connection to an antenna. It also includes an optical PPS ST-connector output.

IRIG-B Time synchronizing module

The IRIG-B time synchronizing module is used for accurate time synchronizing of the IED from a station clock.

Electrical (BNC) and optical connection (ST) for 0XX and 12X IRIG-B support.

Transformer input module TRM

The transformer input module is used to galvanically separate and transform the secondary currents and voltages generated by the measuring transformers. The module has twelve inputs in different combinations of currents and voltage inputs.

Alternative connectors of Ring lug or Compression type can be ordered.

Layout and dimensions

Dimensions

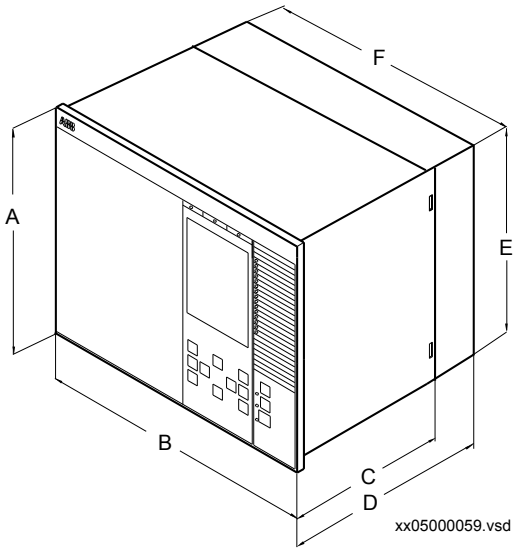

Figure 5. 1/1 x 19” case with rear cover

Case size	A	B	C	D	E	F
6U, 1/1 x 19”	265.9	448.1	201.1	242.1	252.9	430.3
						(mm)

Mounting alternatives

- 19” rack mounting kit
- Flush mounting kit with cut-out dimensions:
  - 1/2 case size (h) 254.3 mm (w) 210.1 mm
  - 1/1 case size (h) 254.3 mm (w) 434.7 mm
- Wall mounting kit

See ordering for details about available mounting alternatives.

17. Connection diagrams

Table 1. Designations for 1/1 x 19” casing with 2 TRM slots

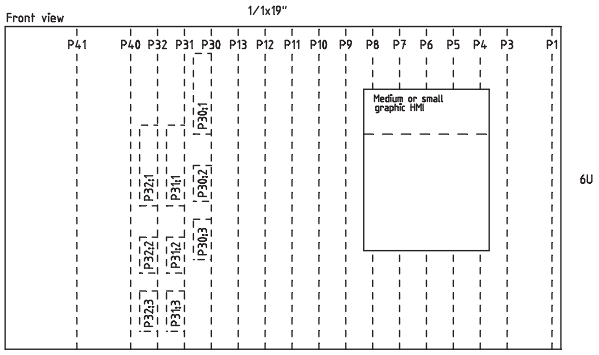

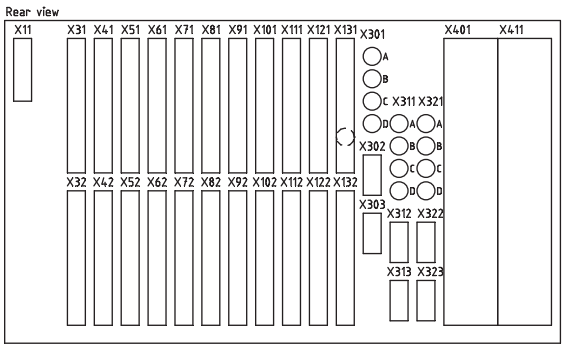

Module	Rear Positions
PSM	X11
BIM, BOM, SOM, IOM or MIM	X31 and X32 etc. to X131 and X132
SLM	X301:A, B, C, D
LDCM, IRIG-B or RS485	X302
LDCM or RS485	X303
OEM	X311:A, B, C, D
LDCM, RS485 or GTM	X312, X313, X322, X323
TRM 1	X401
TRM 2	X411

SLM and LDCM ports shall not be used in RES670.

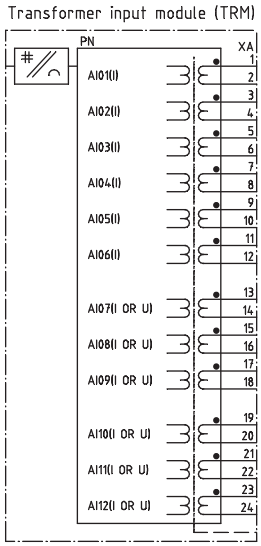

Figure 6. Transformer input module (TRM)

■ Indicates high polarity

	CT/VT-input designation according to figure 6											
Current/voltage configuration (50/60 Hz)	AI01	AI02	AI03	AI04	AI05	AI06	AI07	AI08	AI09	AI10	AI11	AI12
9I+3U, 1A	1A	1A	1A	1A	1A	1A	1A	1A	1A	110-220V	110-220V	110-220V
9I+3U, 5A	5A	5A	5A	5A	5A	5A	5A	5A	5A	110-220V	110-220V	110-220V
5I, 1A+4I, 5A+3U	1A	1A	1A	1A	1A	5A	5A	5A	5A	110-220V	110-220V	110-220V

Note that internal polarity can be adjusted by setting of analog input CT neutral direction and/or on SMAI pre-processing function blocks.

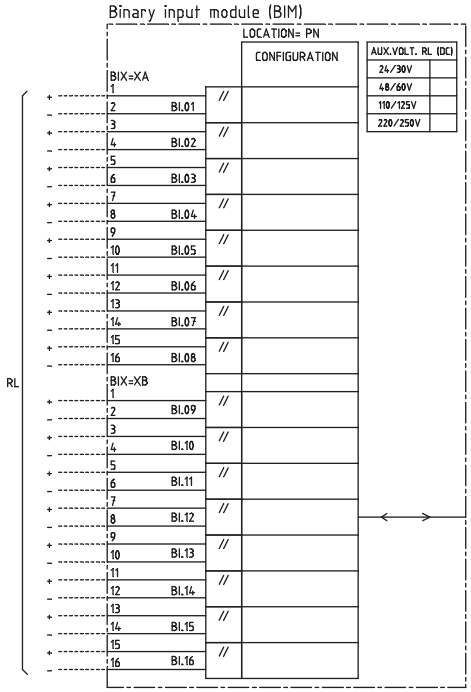

Figure 7. Binary input module (BIM). Input contacts named XA corresponds to rear position X31, X41, and so on, and input contacts named XB to rear position X32, X42, and so on.

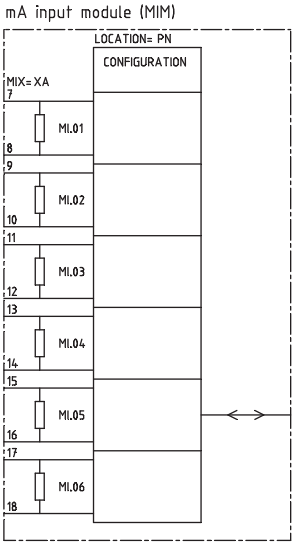

Figure 8. mA input module (MIM)

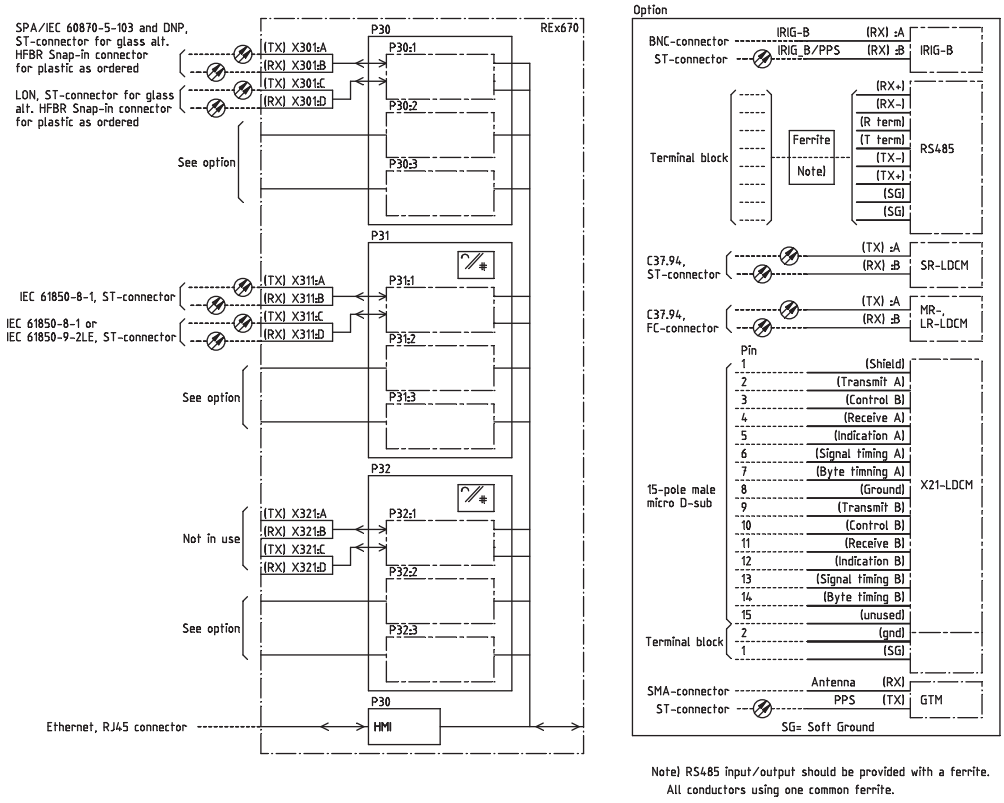

Designation corresponding to module		
Slot	Module	Terminal
P30	NUM	-
P30:1	SLM	X301
P30:2	LDCM	X302
	IRIG-B	
	RS485	
P30:3	LDCM	X303
	RS485	
P31	ADM1	-
P31:1	OEM	X311
P31:2	LDCM	X312
	RS485	
	GTM	
P31:3	LDCM	X313
	RS485	
	GTM	
P32	ADM2	-
P32:1	Not in use	Not in use
P32:2	LDCM	X322
	RS485	
	GTM	
P32:3	LDCM	X323
	RS485	
	GTM	

Figure 9. IED with basic functionality and communication interfaces

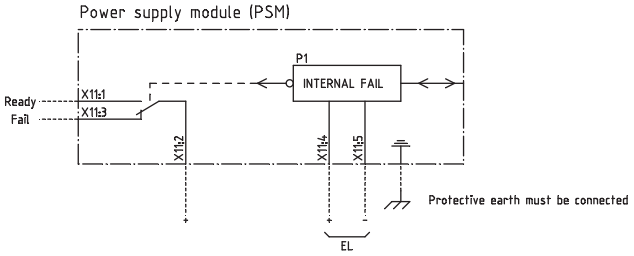

Figure 10. Power supply module (PSM)

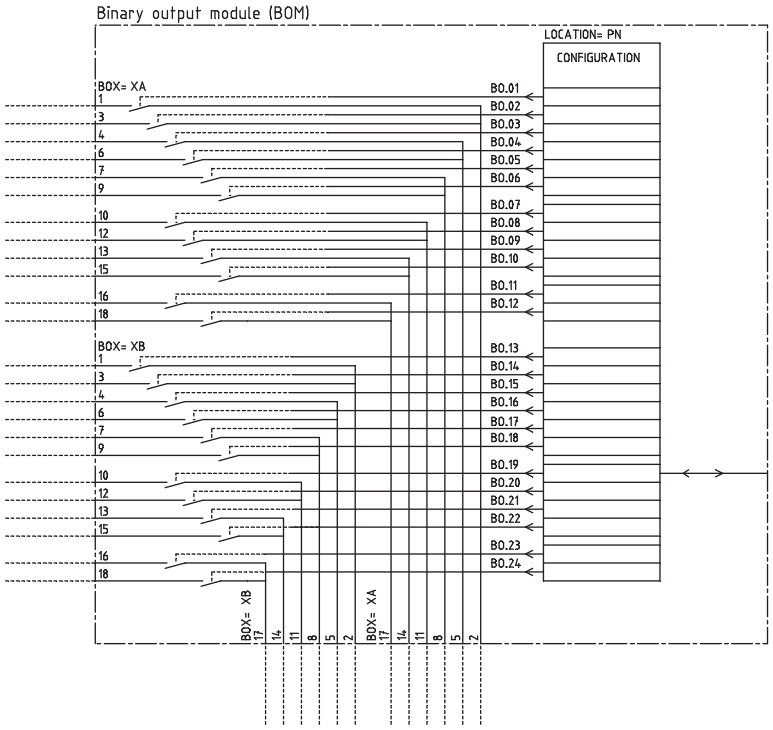

Figure 11. Binary output module (BOM). Output contacts named XA corresponds to rear position X31, X41, and so on, and output contacts named XB to rear position X32, X42, and so on.

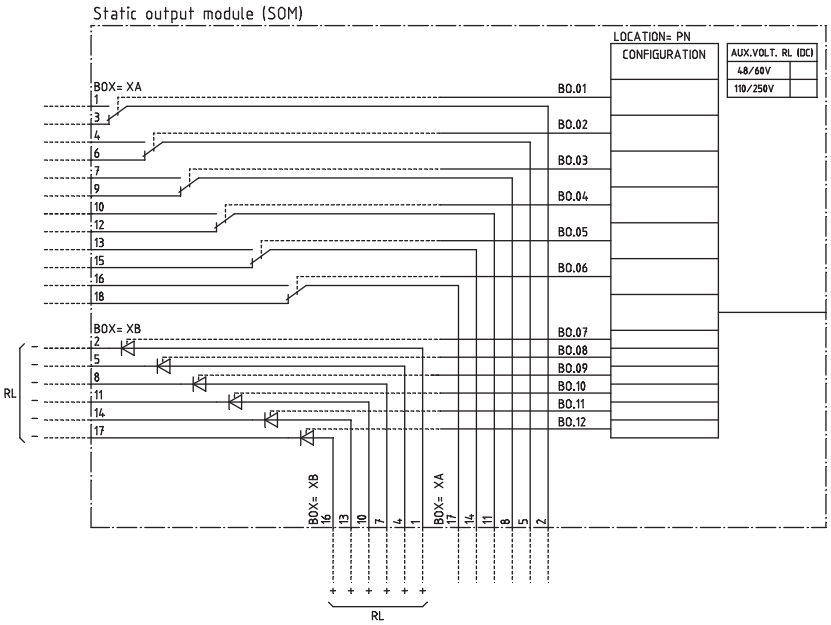

Figure 12. Static output module (SOM)

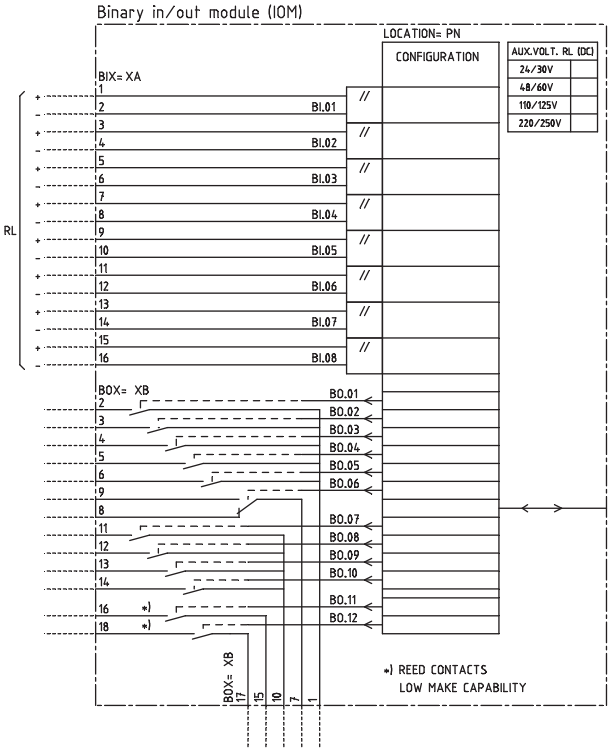

Figure 13. Binary in/out module (IOM). Input contacts named XA corresponds to rear position X31, X41, and so on, and output contacts named XB to rear position X32, X42, and so on.

18. Technical data

General

Definitions	
Reference value	The specified value of an influencing factor to which are referred the characteristics of the equipment
Nominal range	The range of values of an influencing quantity (factor) within which, under specified conditions, the equipment meets the specified requirements
Operative range	The range of values of a given energizing quantity for which the equipment, under specified conditions, is able to perform its intended functions according to the specified requirements

Energizing quantities, rated values and limits
Analog inputs

Table 2. TRM - Energizing quantities, rated values and limits for protection transformer modules

Quantity	Rated value	Nominal range
Current	I_r = 1 or 5 A	(0.2-40) × I_r
Operative range	(0-100) x I_r	
Permissive overload	4 × I_r cont. 100 × I_r for 1 s *)	
Burden	< 150 mVA at I_r = 5 A < 20 mVA at I_r = 1 A	
Ac voltage	U_r = 110 V	0.5–288 V
Operative range	(0–340) V	
Permissive overload	420 V cont. 450 V 10 s	
Burden	< 20 mVA at 110 V	
Frequency	f_r = 50/60 Hz	± 5%

*) max. 350 A for 1 s when COMBITEST test switch is included.

Table 3. TRM - Energizing quantities, rated values and limits for measuring transformer modules

Quantity	Rated value	Nominal range
Current	I_r = 1 or 5 A	(0-1.8) × $I_r$at I_r = 1 A (0-1.6) × $I_r$at I_r = 5 A
Permissive overload	1.1 × I_r cont. 1.8 × I_r for 30 min at I_r = 1 A 1.6 × I_r for 30 min at I_r = 5 A	
Burden	< 350 mVA at I_r = 5 A < 200 mVA at I_r = 1 A	
Ac voltage	U_r = 110 V	0.5–288 V
Operative range	(0–340) V	
Permissive overload	420 V cont. 450 V 10 s	
Burden	< 20 mVA at 110 V	
Frequency	f_r = 50/60 Hz	± 5%

Table 4. MIM - mA input module

Quantity:	Rated value:	Nominal range:
Input resistance	R_{in} = 194 Ohm	-
Input range	± 5, ± 10, ± 20mA 0-5, 0-10, 0-20, 4-20mA	-
Power consumption each mA-board each mA input	 ≤ 2 W ≤ 0.1 W	-

Table 5. OEM - Optical ethernet module

Quantity	Rated value
Number of channels	2
Standard	IEEE 802.3u 100BASE-FX
Type of fiber	62.5/125 μm multimode fibre
Wave length	1300 nm
Optical connector	Type ST
Communication speed	Fast Ethernet 100 MB

Auxiliary DC voltage

Table 6. PSM - Power supply module

Quantity	Rated value	Nominal range
Auxiliary dc voltage, EL (input)	EL = (24 - 60) V EL = (90 - 250) V	EL ± 20% EL ± 20%
Power consumption	50 W typically	-
Auxiliary DC power in-rush	< 5 A during 0.1 s	-

Binary inputs and outputs

Table 7. BIM - Binary input module

Quantity	Rated value	Nominal range
Binary inputs	16	-
DC voltage, RL	24/30 V 48/60 V 110/125 V 220/250 V	RL ± 20% RL ± 20% RL ± 20% RL ± 20%
Power consumption 24/30 V, 50mA 48/60 V, 50mA 110/125 V, 50mA 220/250 V, 50mA 220/250 V, 110mA	 max. 0.05 W/input max. 0.1 W/input max. 0.2 W/input max. 0.4 W/input max. 0.5 W/input	-
Counter input frequency	10 pulses/s max	-
Oscillating signal discriminator	Blocking settable 1–40 Hz Release settable 1–30 Hz	
Debounce filter	Settable 1–20ms	

Maximum 176 binary input channels may be activated simultaneously with influencing factors within nominal range.

Table 8. BIM - Binary input module with enhanced pulse counting capabilities

Quantity	Rated value	Nominal range
Binary inputs	16	-
DC voltage, RL	24/30 V 48/60 V 110/125 V 220/250 V	RL ± 20% RL ± 20% RL ± 20% RL ± 20%
Power consumption 24/30 V 48/60 V 110/125 V 220/250 V	 max. 0.05 W/input max. 0.1 W/input max. 0.2 W/input max. 0.4 W/input	-
Counter input frequency	10 pulses/s max	-
Balanced counter input frequency	40 pulses/s max	-
Oscillating signal discriminator	Blocking settable 1–40 Hz Release settable 1–30 Hz	

Maximum 176 binary input channels may be activated simultaneously with influencing factors within nominal range.

Table 9. SOM - Static Output Module (reference standard: IEC 61810-2): Static binary outputs

Function of quantity	Static binary output trip	
Rated voltage	48 - 60 VDC	110 - 250 VDC
Number of outputs	6	6
Impedance open state	~300 kΩ	~810 kΩ
Test voltage across open contact, 1 min	No galvanic separation	No galvanic separation
Current carrying capacity:		
Continuous	5A	5A
1.0s	10A	10A
Making capacity at capacitive load with the maximum capacitance of 0.2 μF :		
0.2s	30A	30A
1.0s	10A	10A
Breaking capacity for DC with L/R ≤ 40ms	48V / 1A 60V / 0.75A	110V / 0.4A 125V / 0.35A 220V / 0.2A 250V / 0.15A
Operating time	<1ms	<1ms

Table 10. SOM - Static Output module data (reference standard: IEC 61810-2): Electromechanical relay outputs

Function of quantity	Trip and signal relays
Max system voltage	250V AC/DC
Number of outputs	6
Test voltage across open contact, 1 min	1000V rms
Current carrying capacity:	
Continuous	8A
1.0s	10A
Making capacity at capacitive load with the maximum capacitance of 0.2 μF:	
0.2s	30A
1.0s	10A
Breaking capacity for DC with L/R ≤ 40ms	48V / 1A 110V / 0.4A 125V / 0.35A 220V / 0.2A 250V / 0.15A

Table 11. BOM - Binary output module contact data (reference standard: IEC 61810-2)

Function or quantity	Trip and Signal relays
Binary outputs	24
Max system voltage	250 V AC, DC
Test voltage across open contact, 1 min	1000 V rms
Current carrying capacity Per relay, continuous Per relay, 1 s Per process connector pin, continuous	 8 A 10 A 12 A
Making capacity at inductive load with L/R>10 ms 0.2 s 1.0 s	 30 A 10 A
Breaking capacity for AC, cos φ>0.4	250 V/8.0 A
Breaking capacity for DC with L/R < 40 ms	48 V/1 A 110 V/0.4 A 125 V/0.35 A 220 V/0.2 A 250 V/0.15 A

Influencing factors

Table 12. Temperature and humidity influence

Parameter	Reference value	Nominal range	Influence
Ambient temperature, operate value	+20 °C	-10 °C to +55 °C	0.02% /°C
Relative humidity Operative range	10%-90% 0%-95%	10%-90%	-
Storage temperature	-40 °C to +70 °C	-	-

Table 13. Auxiliary DC supply voltage influence on functionality during operation

Dependence on	Reference value	Within nominal range	Influence
Ripple, in DC auxiliary voltage Operative range	max. 2% Full wave rectified	15% of EL	0.01% /%
Auxiliary voltage dependence, operate value		± 20% of EL	0.01% /%
Interrupted auxiliary DC voltage		24-60 V DC ± 20%	
		90-250 V DC ± 20%	
Interruption interval 0–50 ms			No restart
0–∞ s			Correct behaviour at power down
Restart time			<300 s

Table 14. Frequency influence (reference standard: IEC 60255–1)

Dependence on	Within nominal range	Influence
Frequency dependence, operate value	f_r ± 2.5 Hz for 50 Hz f_r ± 3.0 Hz for 60 Hz	± 1.0% / Hz
Harmonic frequency dependence (20% content)	2nd, 3rd and 5th harmonic of f_r	± 1.0%

Type tests according to standards

Table 15. Electromagnetic compatibility

Test	Type test values	Reference standards
1 MHz burst disturbance	2.5 kV	IEC 60255-22-1
100 kHz slow damped oscillatory wave immunity test	2.5 kV	IEC 61000-4-18, Class III
Ring wave immunity test, 100 kHz	2-4 kV	IEC 61000-4-12, Class IV
Surge withstand capability test	2.5 kV, oscillatory 4.0 kV, fast transient	IEEE/ANSI C37.90.1
Electrostatic discharge Direct application Indirect application	15 kV air discharge 8 kV contact discharge 8 kV contact discharge	IEC 60255-22-2, Class IV IEC 61000-4-2, Class IV
Electrostatic discharge Direct application Indirect application	15 kV air discharge 8 kV contact discharge 8 kV contact discharge	IEEE/ANSI C37.90.1
Fast transient disturbance	4 kV	IEC 60255-22-4, Class A
Surge immunity test	1-2 kV, 1.2/50 µs high energy	IEC 60255-22-5
Power frequency immunity test	150-300 V, 50 Hz	IEC 60255-22-7, Class A
Conducted common mode immunity test	15 Hz-150 kHz	IEC 61000-4-16, Class IV
Power frequency magnetic field test	1000 A/m, 3 s 100 A/m, cont.	IEC 61000-4-8, Class V
Damped oscillatory magnetic field test	100 A/m	IEC 61000-4-10, Class V
Radiated electromagnetic field disturbance	20 V/m, 80-1000 MHz 1.4-2.7 GHz	IEC 60255-22-3
Radiated electromagnetic field disturbance	35 V/m 26-1000 MHz	IEEE/ANSI C37.90.2
Conducted electromagnetic field disturbance	10 V, 0.15-80 MHz	IEC 60255-22-6
Radiated emission	30-1000 MHz	IEC 60255-25
Conducted emission	0.15-30 MHz	IEC 60255-25

Table 16. Insulation

Test	Type test values	Reference standard
Dielectric test	2.0 kV AC, 1 min.	IEC 60255-5
Impulse voltage test	5 kV, 1.2/50 µs, 0.5 J	
Insulation resistance	>100 MΩ at 500 VDC	

Table 17. Environmental tests

Test	Type test value	Reference standard
Cold test	Test Ad for 16 h at -25°C	IEC 60068-2-1
Storage test	Test Ad for 16 h at -40°C	IEC 60068-2-1
Dry heat test	Test Bd for 16 h at +70°C	IEC 60068-2-2
Damp heat test, steady state	Test Ca for 4 days at +40 °C and humidity 93%	IEC 60068-2-78
Damp heat test, cyclic	Test Db for 6 cycles at +25 to +55 °C and humidity 93 to 95% (1 cycle = 24 hours)	IEC 60068-2-30

Table 18. CE compliance

Test	According to
Immunity	EN 50263
Emissivity	EN 50263
Low voltage directive	EN 50178

Table 19. Mechanical tests

Test	Type test values	Reference standards
Vibration response test	Class II	IEC 60255-21-1
Vibration endurance test	Class I	IEC 60255-21-1
Shock response test	Class II	IEC 60255-21-2
Shock withstand test	Class I	IEC 60255-21-2
Bump test	Class I	IEC 60255-21-2
Seismic test	Class II	IEC 60255-21-3

Wide area measurement system

Table 20. Protocol reporting via IEEE 1344 and C37.118 PMUREPORT

Influencing quantity	Range	Accuracy
Signal frequency	± 0.1 x f_r	≤ 1.0% TVE
Signal magnitude: Voltage phasor Current phasor	 (0.1–1.2) x U_r (0.5–2.0) x I_r	
Phase angle	± 180°	
Harmonic distortion	10% from 2nd – 50th	
Interfering signal: Magnitude Minimum frequency Maximum frequency	 10% of fundamental signal 0.1 x f_r 1000 Hz	

Current protection

Table 21. OC4PTOC

Function	Setting range	Accuracy
Operate current		± 1.0% of I_r at I ≤ I_r ± 1.0% of I at I > I_r
Reset ratio		-
Min. operating current	(1-10000)% of *IBase*	± 1.0% of I_r at I ≤ I_r ±1.0% of I at I > I_r
Relay characteristic angle (RCA)		± 2.0 degrees
2nd harmonic blocking	(5–100)% of fundamental	± 2.0% of I_r
Independent time delay at 0 to 2 x I_{set}	(0.000-60.000) s	
Minimum operate time	(0.000-60.000) s	
Inverse characteristics, see table 64, table 65 and table 66	curve types	
Operate time, start non-directional at 0 to 2 x I_{set}	Min. = 15 ms Max. = 30 ms	
Reset time, start non-directional at 2 to 0 x I_{set}	Min. = 15 ms Max. = 30 ms	
Critical impulse time	10 ms typically at 0 to 2 x I_{set}	-
Impulse margin time	15 ms typically	-

Table 22. Four step residual overcurrent protection EF4PTOC

Function	Range or value	Accuracy
Operate current	(1-2500)% of *IBase*	± 1.0% of I_r at I < I_r ± 1.0% of I at I > I_r
Reset ratio	> 95%	-
Operate current for directional comparison	(1–100)% of *IBase*	± 1.0% of I_r
Timers	(0.000-60.000) s	± 0.5% ± ms
Inverse characteristics, see table 64, table 65 and table 66	18 curve types	See table 64, table 65 and table 66
Minimum polarizing voltage	(1–100)% of *UBase*	± 0.5% of U_r
Minimum polarizing current	(1-30)% of *IBase*	±0.25 % of I_r
Real part of source Z used for current polarization	(0.50-1000.00) Ω/phase	-
Imaginary part of source Z used for current polarization	(0.50–3000.00) Ω/phase	-
Operate time, start function	25 ms typically at 0 to 2 x I_{set}	-
Reset time, start function	25 ms typically at 2 to 0 x I_{set}	-

Table 23. Four step negative sequence overcurrent protection NS4PTOC

Function	Range or value	Accuracy
Operate value, negative sequence current, step 1-4	(1-2500)% of *IBase*	± 1.0% of I_r at $I \leq I_r$ ± 1.0% of I at $I > I_r$
Reset ratio	> 95%	-
Timers	(0.000-60.000) s	± 0.5% ± 10 ms
Inverse characteristics, see table 64, table 65 and table 66	18 curve types	See table 64, table 65 and table 66
Minimum operate current for step 1 - 4	(1.00 - 10000.00)% of *IBase*	± 1.0% of I_r at $I < I_r$ ± 1.0% of I at $I > I_r$
Operate value, negative current for directional release	(1–100)% of *IBase*	± 1.0% of I_r
Relay characteristic angle	(-180 to 180) degrees	± 2.0 degrees
Minimum polarizing voltage	(1–100)% of *UBase*	± 0.5% of U_r
Minimum polarizing current	(2-100)% of *IBase*	±1.0% of I_r
Real part of negative sequence source impedance used for current polarization	(0.50-1000.00) Ω/phase	-
Imaginary part of negative sequence source impedance used for current polarization	(0.50–3000.00) Ω/phase	-
Operate time, start function	25 ms typically at 0.5 to 2 x I_{set}	-
Reset time, start function	25 ms typically at 2 to 0.5 x I_{set}	-
Critical impulse time, start function	10 ms typically at 0 to 2 x I_{set}	-
Impulse margin time, start function	15 ms typically	-
Transient overreach	<10% at τ = 100 ms	-

Table 24. Sensitive directional residual overcurrent and power protection SDEPSDE

Function	Range or value	Accuracy
Operate level for $3I_0 \cdot \cos\varphi$ directional residual overcurrent	(0.25-200.00)% of *IBase*	± 1.0% of I_r at $I \le I_r$ ± 1.0% of I at $I > I_r$ At low setting: (0.25-1.00)% of I_r: ±0.05% of I_r (1.00-5.00)% of I_r: ±0.1% of I_r
Operate level for $3I_0 \cdot 3U_0 \cdot \cos\varphi$ directional residual power	(0.25-200.00)% of *SBase*	± 1.0% of S_r at $S \le S_r$ ± 1.0% of S at $S > S_r$ At low setting: (0.25-5.00)% of *SBase* ± 10% of set value
Operate level for $3I_0$ and φ residual overcurrent	(0.25-200.00)% of *IBase*	± 1.0% of I_r at $\le I_r$ ± 1.0% of I at $I > I_r$ At low setting: (0.25-1.00)% of I_r: ±0.05% of I_r (1.00-5.00)% of I_r: ±0.1% of I_r
Operate level for non-directional overcurrent	(1.00-400.00)% of *IBase*	± 1.0% of I_r at $I \le I_r$ ± 1.0% of I at $I > I_r$ At low setting <5% of I_r: ±0.1% of I_r
Operate level for non-directional residual overvoltage	(1.00-200.00)% of *UBase*	± 0.5% of U_r at $U \le U_r$ ± 0.5% of U at $U > U_r$
Residual release current for all directional modes	(0.25-200.00)% of *IBase*	± 1.0% of I_r at $I \le I_r$ ± 1.0% of I at $I > I_r$ At low setting: (0.25-1.00)% of I_r: ±0.05% of I_r (1.00-5.00)% of I_r: ±0.1% of I_r
Residual release voltage for all directional modes	(0.01-200.00)% of *UBase*	± 0.5% of U_r at $U \le U_r$ ± 0.5% of U at $U > U_r$
Reset ratio	> 95%	-
Timers	(0.000-60.000) s	± 0.5% ± ms
Inverse characteristics, see table 64, table 65 and table 66	19 curve types	See table 64, table 65 and table 66
Relay characteristic angle RCA	(-179 to 180) degrees	± 2.0 degrees
Relay open angle ROA	(0-90) degrees	± 2.0 degrees
Operate time, non-directional residual over current	60 ms typically at 0 to 2 x I_{set}	-

Table 24. Sensitive directional residual overcurrent and power protection SDEPSDE, continued

Function	Range or value	Accuracy
Reset time, non-directional residual over current	60 ms typically at 2 to 0 x I_{set}	-
Operate time, start function	ms typically at 0 to 2 x I_{set}	-
Reset time, start function	50 ms typically at 2 to 0 x I_{set}	-

Table 25. Thermal overload protection, one time constant LCPTTR/LFPTTR

Function	Range or value	Accuracy
Reference current	(0-400)% of *IBase*	± 1.0% of I_r
Reference temperature	(0-	± 1.0°C, ±2°F
Operate time: $$t = \tau \ln \left[\frac{I^2 - I_p^2}{I^2 - I_p^2 - \frac{T_{Trip} - T_{Amb}}{T_{ref}} \cdot I_{ref}^2} \right]$$ (Equation 1) T_{Trip}= set operate temperature T_{Amb} = ambient temperature T_{ref} = temperature rise above ambient at I_{ref} I_{ref} = reference load current I = actual measured current I_p = load current before overload occurs		IEC 60255-8, ±5.0% or ±200 ms whichever is greater
Alarm temperature	(0-200)°C, (0-400)°F	± 2.0% of heat content trip
Trip temperature	(0-400)°C, (0-600)°F	± 2.0% of heat content trip
Reset level temperature	(0-400)°C, (0-600)°F	± 2.0% of heat content trip

Voltage protection

Table 26. Two step undervoltage protection UV2PTUV

Function	Range or value	Accuracy
Operate voltage, low and high step	(1–100)% of *UBase*	± 0.5% of U_r
Absolute hysteresis	(0–100)% of *UBase*	± 0.5% of U_r
Internal blocking level, step 1 and step 2	(1–100)% of *UBase*	± 0.5% of U_r
Inverse time characteristics for step 1 and step 2, see table 68	-	See table 68
Definite time delay, step 1	(0.00 - 6000.00) s	± 0.5% ± ms
Definite time delays	(0.000-60.000) s	± 0.5% ± ms
Minimum operate time, inverse characteristics	(0.000–60.000) s	± 0.5% ± ms
Operate time, start function	25 ms typically at 2 x U_{set} to 0	-
Reset time, start function	25 ms typically at 0 to 2 x U_{set}	-
Critical impulse time	10 ms typically at 2 x U_{set} to 0	-
Impulse margin time	15 ms typically	-

Table 27. Two step overvoltage protection OV2PTOV

Function	Range or value	Accuracy
Operate voltage, step 1 and 2	(1-200)% of *UBase*	± 0.5% of U_r at U < U_r ± 0.5% of U at U > U_r
Absolute hysteresis	(0–100)% of *UBase*	± 0.5% of U_r at U < U_r ± 0.5% of U at U > U_r
Inverse time characteristics for steps 1 and 2, see table 67	-	See table 67
Definite time delay, step 1	(0.00 - 6000.00) s	± 0.5% ± ms
Definite time delays	(0.000-60.000) s	± 0.5% ± ms
Minimum operate time, Inverse characteristics	(0.000-60.000) s	± 0.5% ± ms
Operate time, start function	25 ms typically at 0 to 2 x U_{set}	-
Reset time, start function	ms typically at 2 to 0 x U_{set}	-
Critical impulse time	10 ms typically at 0 to 2 x U_{set}	-
Impulse margin time	15 ms typically	-

Frequency protection

Table 28. Underfrequency protection SAPTUF

Function	Range or value	Accuracy
Operate value, start function	(35.00-75.00) Hz	± 2.0 mHz
Operate time, start function	100 ms typically	-
Reset time, start function	100 ms typically	-
Operate time, definite time function	(0.000-60.000)s	± 0.5% ± 10 ms
Reset time, definite time function	(0.000-60.000)s	± 0.5% ± 10 ms
Voltage dependent time delay $t = \left[\frac{U - UMin}{UNom - UMin}\right]^{Exponent} \cdot (tMax - tMin) + tMin$ (Equation 2) $U = U_{measured}$	Settings: UNom=(50-150)% of U_{base} UMin=(50-150)% of U_{base} Exponent=0.0-5.0 tMax=(0.000-60.000)s tMin=(0.000-60.000)s	5% + 200 ms

Table 29. Overfrequency protection SAPTOF

Function	Range or value	Accuracy
Operate value, start function	(35.00-75.00) Hz	± 2.0 mHz at symmetrical three-phase voltage
Operate time, start function	100 ms typically at f_{set} -0.5 Hz to f_{set} +0.5 Hz	-
Reset time, start function	100 ms typically	-
Operate time, definite time function	(0.000-60.000)s	ms
Reset time, definite time function	(0.000-60.000)s	

Table 30. Rate-of-change frequency protection SAPFRC

Function	Range or value	Accuracy
Operate value, start function	(-10.00-10.00) Hz/s	± 10.0 mHz/s
Operate value, internal blocking level	(0-100)% of UBase	± 0.5% of U_r
Operate time, start function	100 ms typically	-

Multipurpose protection

Table 31. General current and voltage protection CVGAPC

Function	Range or value	Accuracy
Measuring current input	phase1, phase2, phase3, PosSeq, NegSeq, 3*ZeroSeq, MaxPh, MinPh, UnbalancePh, phase1-phase2, phase2-phase3, phase3-phase1, MaxPh-Ph, MinPh-Ph, UnbalancePh-Ph	-
Base current	(1 - 99999) A	-
Measuring voltage input	phase1, phase2, phase3, PosSeq, -NegSeq, -3*ZeroSeq, MaxPh, MinPh, UnbalancePh, phase1-phase2, phase2-phase3, phase3-phase1, MaxPh-Ph, MinPh-Ph, UnbalancePh-Ph	-
Base voltage	(0.05 - 2000.00) kV	-
Start overcurrent, step 1 and 2	(2 - 5000)% of IBase	± 1.0% of I_r for $I<I_r$ ± 1.0% of I for $I>I_r$
Start undercurrent, step 1 and 2	(2 - 150)% of IBase	± 1.0% of I_r for $I<I_r$ ± 1.0% of I for $I>I_r$
Definite time delay	(0.00 - 6000.00) s	± 0.5% ± 10 ms
Operate time start overcurrent	25 ms typically at 0 to 2 x I_{set}	-
Reset time start overcurrent	25 ms typically at 2 to 0 x I_{set}	-
Operate time start undercurrent	25 ms typically at 2 to 0 x I_{set}	-
Reset time start undercurrent	25 ms typically at 0 to 2 x I_{set}	-
See table 64 and table 65	Parameter ranges for customer defined characteristic no 17: k: 0.05 - 999.00 A: 0.0000 - 999.0000 B: 0.0000 - 99.0000 C: 0.0000 - 1.0000 P: 0.0001 - 10.0000 PR: 0.005 - 3.000 TR: 0.005 - 600.000 CR: 0.1 - 10.0	See table 64 and table 65
Voltage level where voltage memory takes over	(0.0 - 5.0)% of UBase	± 0.5% of U_r
Start overvoltage, step 1 and 2	(2.0 - 200.0)% of UBase	± 0.5% of U_r for $U<U_r$ ± 0.5% of U for $U>U_r$
Start undervoltage, step 1 and 2	(2.0 - 150.0)% of UBase	± 0.5% of U_r for $U<U_r$ ± 0.5% of U for $U>U_r$
Operate time, start overvoltage	25 ms typically at 0 to 2 x U_{set}	-
Reset time, start overvoltage	25 ms typically at 2 to 0 x U_{set}	-
Operate time start undervoltage	25 ms typically 2 to 0 x U_{set}	-
Reset time start undervoltage	25 ms typically at 0 to 2 x U_{set}	-
High and low voltage limit, voltage dependent operation	(1.0 - 200.0)% of UBase	± 1.0% of U_r for $U<U_r$ ± 1.0% of U for $U>U_r$
Directional function	Settable: NonDir, forward and reverse	-

Table 31. General current and voltage protection CVGAPC , continued

Function	Range or value	Accuracy
Relay characteristic angle	(-180 to +180) degrees	± 2.0 degrees
Relay operate angle	(1 to 90) degrees	± 2.0 degrees
Reset ratio, overcurrent	> 95%	-
Reset ratio, undercurrent	< 105%	-
Reset ratio, overvoltage	> 95%	-
Reset ratio, undervoltage	< 105%	-
Overcurrent:		
Critical impulse time	10 ms typically at 0 to 2 x I_{set}	-
Impulse margin time	15 ms typically	-
Undercurrent:		
Critical impulse time	10 ms typically at 2 to 0 x I_{set}	-
Impulse margin time	15 ms typically	-
Overvoltage:		
Critical impulse time	10 ms typically at 0 to 2 x U_{set}	-
Impulse margin time	15 ms typically	-
Undervoltage:		
Critical impulse time	10 ms typically at 2 to 0 x U_{set}	-
Impulse margin time	15 ms typically	-

Secondary system supervision

Table 32. Current circuit supervision CCSRDIF

Function	Range or value	Accuracy
Operate current	(5-200)% of I_r	± 10.0% of I_r at $I \leq I_r$ ± 10.0% of I at $I > I_r$
Block current	(5-500)% of I_r	± 5.0% of I_r at $I \leq I_r$ ± 5.0% of I at $I > I_r$

Table 33. Fuse failure supervision SDDRFUF

Function	Range or value	Accuracy
Operate voltage, zero sequence	(1-100)% of UBase	± 1.0% of U_r
Operate current, zero sequence	(1–100)% of IBase	± 1.0% of I_r
Operate voltage, negative sequence	(1–100)% of UBase	± 0.5% of U_r
Operate current, negative sequence	(1–100)% of IBase	± 1.0% of I_r
Operate voltage change level	(1–100)% of UBase	± 5.0% of U_r
Operate current change level	(1–100)% of IBase	± 5.0% of I_r
Operate phase voltage	(1-100)% of UBase	± 0.5% of U_r
Operate phase current	(1-100)% of IBase	± 1.0% of I_r
Operate phase dead line voltage	(1-100)% of UBase	± 0.5% of U_r
Operate phase dead line current	(1-100)% of IBase	± 1.0% of I_r

Logic

Table 34. Tripping logic SMPPTRC

Function	Range or value	Accuracy
Trip action	3-ph, 1/3-ph, 1/2/3-ph	-
Timers	(0.000-60.000) s	± 0.5% ± 10 ms

Table 35. Configurable logic blocks

Logic block	Quantity with cycle time			Range or value	Accuracy
	fast	medium	normal		
LogicAND	60	60	160	-	-
LogicOR	60	60	160	-	-
LogicXOR	10	10	20	-	-
LogicInverter	30	30	80	-	-
LogicSRMemory	10	10	20	-	-
LogicRSMemory	10	10	20	-	-
LogicGate	10	10	20	-	-
LogicTimer	10	10	20	(0.000–90000.000) s	± 0.5% ± 10 ms
LogicPulseTimer	10	10	20	(0.000–90000.000) s	± 0.5% ± 10 ms
LogicTimerSet	10	10	20	(0.000–90000.000) s	± 0.5% ± 10 ms
LogicLoopDelay	10	10	20	(0.000–90000.000) s	± 0.5% ± 10 ms
Trip Matrix Logic	6	6	-	-	-
Boolean 16 to Integer	4	4	8	-	-
Boolean 16 to integer with Logic Node	4	4	8	-	-
Integer to Boolean 16	4	4	8	-	-
Integer to Boolean 16 with Logic Node	4	4	8	-	-

Monitoring

Table 36. Phase current measurement CMMXU

Function	Range or value	Accuracy
Current	(0.1-4.0) × I_r	± 0.2% of I_r at I ≤ 0.5 × I_r ± 0.2% of I at I > 0.5 × I_r
Phase angle	(0.1–4.0) x I_r	± 0.5° at 0.2 × I_r < I < 0.5 × I_r ± 0.2° at 0.5 × I_r ≤ I < 4.0 × I_r

Table 37. Phase-phase voltage measurement VMMXU

Function	Range or value	Accuracy
Voltage	(10 to 300) V	± 0.3% of U at U ≤ 50 V ± 0.2% of U at U > 50 V
Phase angle	(10 to 300) V	± 0.3° at U ≤ 50 V ± 0.2° at U > 50 V

Table 38. Phase-neutral voltage measurement VNMMXU

Function	Range or value	Accuracy
Voltage	(10 to 300) V	± 0.3% of U at U ≤ 50 V ± 0.2% of U at U > 50 V
Phase angle	(10 to 300) V	± 0.3° at U ≤ 50 V ± 0.2° at U > 50 V

Table 39. Current sequence component measurement CMSQI

Function	Range or value	Accuracy
Current positive sequence, I1 Three phase settings	(0.1–4.0) × I_r	± 0.2% of I_r at I ≤ 0.5 × I_r ± 0.2% of I at I > 0.5 × I_r
Current zero sequence, 3I0 Three phase settings	(0.1–1.0) × I_r	± 0.2% of I_r at I ≤ 0.5 × I_r ± 0.2% of I at I > 0.5 × I_r
Current negative sequence, I2 Three phase settings	(0.1–1.0) × I_r	± 0.2% of I_r at I ≤ 0.5 × I_r ± 0.2% of I at I > 0.5 × I_r
Phase angle	(0.1–4.0) × I_r	± 0.5° at 0.2 × I_r < I < 0.5 × I_r ± 0.2° at 0.5 × I_r ≤ I < 4.0 × I_r

Table 40. Voltage sequence measurement VMSQI

Function	Range or value	Accuracy
Voltage positive sequence, U1	(10 to 300) V	± 0.3% of U at U ≤ 50 V ± 0.2% of U at U > 50 V
Voltage zero sequence, 3U0	(10 to 300) V	± 0.3% of U at U ≤ 50 V ± 0.2% of U at U > 50 V
Voltage negative sequence, U2	(10 to 300) V	± 0.3% of U at U ≤ 50 V ± 0.2% of U at U > 50 V
Phase angle	(10 to 300) V	± 0.3° at U ≤ 50 V ± 0.2° at U > 50 V

Table 41. Supervision of mA input signals

Function	Range or value	Accuracy
mA measuring function	± 5, ± 10, ± 20 mA 0-5, 0-10, 0-20, 4-20 mA	± 0.1 % of set value ± 0.005 mA
Max current of transducer to input	(-20.00 to +20.00) mA	
Min current of transducer to input	(-20.00 to +20.00) mA	
Alarm level for input	(-20.00 to +20.00) mA	
Warning level for input	(-20.00 to +20.00) mA	
Alarm hysteresis for input	(0.0-20.0) mA	

Table 42. Event counter CNTGGIO

Function	Range or value	Accuracy
Counter value	0-100000	-
Max. count up speed	10 pulses/s (50% duty cycle)	-

Table 43. Disturbance report

Function	Range or value	Accuracy
Pre-fault time	(0.05–9.90) s	-
Post-fault time	(0.1–10.0) s	-
Limit time	(0.5–10.0) s	-
Maximum number of recordings	100, first in - first out	-
Time tagging resolution	1 ms	See table 60
Maximum number of analog inputs	30 + 10 (external + internally derived)	-
Maximum number of binary inputs	96	-
Maximum number of phasors in the Trip Value recorder per recording	30	-
Maximum number of indications in a disturbance report	96	-
Maximum number of events in the Event recording per recording	150	-
Maximum number of events in the Event list	1000, first in - first out	-
Maximum total recording time (3.4 s recording time and maximum number of channels, typical value)	340 seconds (100 recordings) at 50 Hz, 280 seconds (80 recordings) at 60 Hz	-
Sampling rate	1 kHz at 50 Hz 1.2 kHz at 60 Hz	-
Recording bandwidth	(5-300) Hz	-

Table 44. Event list

Function		Value
Buffer capacity	Maximum number of events in the list	1000
Resolution		1 ms
Accuracy		Depending on time synchronizing

Table 45. Indications

Function		Value
Buffer capacity	Maximum number of indications presented for single disturbance	96
	Maximum number of recorded disturbances	100

Table 46. Event recorder

Function		Value
Buffer capacity	Maximum number of events in disturbance report	150
	Maximum number of disturbance reports	100
Resolution		1 ms
Accuracy		Depending on time synchronizing

Table 47. Trip value recorder

Function		Value
Buffer capacity	Maximum number of analog inputs	30
	Maximum number of disturbance reports	100

Table 48. Disturbance recorder

Function		Value
Buffer capacity	Maximum number of analog inputs	40
	Maximum number of binary inputs	96
	Maximum number of disturbance reports	100
Maximum total recording time (3.4 s recording time and maximum number of channels, typical value)		340 seconds (100 recordings) at 50 Hz 280 seconds (80 recordings) at 60 Hz

Metering

Table 49. Pulse counter PCGGIO

Function	Setting range	Accuracy
Input frequency	See Binary Input Module (BIM)	-
Cycle time for report of counter value	(1–3600) s	-

Table 50. Energy metering ETPMMTR

Function	Range or value	Accuracy
Energy metering		Input from MMXU. No extra error at steady load

Station communication

Table 51. IEC 61850-8-1 communication protocol

Function	Value
Protocol	IEC 61850-8-1
Communication speed for the IEDs	100BASE-FX
Protocol	IEC 608–5–103
Communication speed for the IEDs	9600 or 19200 Bd
Protocol	DNP3.0
Communication speed for the IEDs	300–19200 Bd
Protocol	TCP/IP, Ethernet
Communication speed for the IEDs	100 Mbit/s

Table 52. Galvanic RS485 communication module

Quantity	Range or value
Communication speed	2400–19200 bauds
External connectors	RS-485 6-pole connector Soft ground 2-pole connector

Table 53. IEC 62439-3 Edition 1 and Edition 2 parallel redundancy protocol

Function	Value
Protocol	IEC 61850-8-1
Communication speed	100 Base-FX

Hardware

IED

Table 54. Case

Material	Steel sheet
Front plate	Steel sheet profile with cut-out for HMI
Surface treatment	Aluzink preplated steel
Finish	Light grey (RAL 7035)

Table 55. Water and dust protection level according to IEC 60529

Front	IP40 (IP54 with sealing strip)
Sides, top and bottom	IP20
Rear side	IP20 with screw compression type IP10 with ring lug terminals

Table 56. Weight

Case size	Weight
6U, 1/1 x 19”	≤ 18 kg

Connection system

Table 57. CT and VT circuit connectors

Connector type	Rated voltage and current	Maximum conductor area
Screw compression type	250 V AC, 20 A	4 mm^2 (AWG12) 2 x 2.5 mm^2 (2 x AWG14)
Terminal blocks suitable for ring lug terminals	250 V AC, 20 A	4 mm^2 (AWG12)

Table 58. Binary I/O connection system

Connector type	Rated voltage	Maximum conductor area
Screw compression type	250 V AC	2.5 mm^2 (AWG14) 2 × 1 mm^2 (2 x AWG18)
Terminal blocks suitable for ring lug terminals	300 V AC	3 mm^2 (AWG14)

Basic IED functions

Table 59. Self supervision with internal event list

Data	Value
Recording manner	Continuous, event controlled
List size	40 events, first in-first out

Table 60. Time synchronization, time tagging

Function	Value
Time tagging resolution, events and sampled measurement values	1 ms
Time tagging error with synchronization once/min (minute pulse synchronization), events and sampled measurement values	± 1.0 ms typically
Time tagging error with SNTP synchronization, sampled measurement values	± 1.0 ms typically

Table 61. GPS time synchronization module (GTM)

Function	Range or value	Accuracy
Receiver	–	±1µs relative UTC
Time to reliable time reference with antenna in new position or after power loss longer than 1 month	<30 minutes	–
Time to reliable time reference after a power loss longer than 48 hours	<15 minutes	–
Time to reliable time reference after a power loss shorter than 48 hours	<5 minutes	–

Table 62. GPS – Antenna and cable

Function	Value
Max antenna cable attenuation	26 db @ 1.6 GHz
Antenna cable impedance	50 ohm
Lightning protection	Must be provided externally
Antenna cable connector	SMA in receiver end TNC in antenna end
Accuracy	+/-2µs

Table 63. IRIG-B

Quantity	Rated value
Number of channels IRIG-B	1
Number of channels PPS	1
Electrical connector:	
Electrical connector IRIG-B	BNC
Pulse-width modulated	5 Vpp
Amplitude modulated – low level – high level	 1-3 Vpp 3 x low level, max 9 Vpp
Supported formats	IRIG-B 00x, IRIG-B 12x
Accuracy	+/-10µs for IRIG-B 00x and +/-100µs for IRIG-B 12x
Input impedance	100 k ohm
Optical connector:	
Optical connector PPS and IRIG-B	Type ST
Type of fibre	62.5/125 µm multimode fibre
Supported formats	IRIG-B 00x, PPS
Accuracy	+/- 2µs

Inverse characteristic

Table 64. ANSI Inverse time characteristics

Function	Range or value	Accuracy
Operating characteristic: $t = \left(\frac{A}{\left(I^P - 1\right)} + B \right) \cdot k$ Reset characteristic: $t = \frac{t_r}{\left(I^2 - 1\right)} \cdot k$ $I = I_{measured}/I_{set}$	k = (0.05-999) in steps of 0.01	-
ANSI Extremely Inverse	A=28.2, B=0.1217, P=2.0 , tr=29.1	ANSI/IEEE C37.112, 5% + 40 ms
ANSI Very inverse	A=19.61, B=0.491, P=2.0 , tr=21.6	
ANSI Normal Inverse	A=0.0086, B=0.0185, P=0.02, tr=0.46	
ANSI Moderately Inverse	A=0.0515, B=0.1140, P=0.02, tr=4.85	
ANSI Long Time Extremely Inverse	A=64.07, B=0.250, P=2.0, tr=30	
ANSI Long Time Very Inverse	A=28.55, B=0.712, P=2.0, tr=13.46	
ANSI Long Time Inverse	A=0.086, B=0.185, P=0.02, tr=4.6	

Table 65. IEC Inverse time characteristics

Function	Range or value	Accuracy
Operating characteristic: $t = \left(\frac{A}{\left(I^P - 1\right)}\right) \cdot k$ $I = I_{measured}/I_{set}$	k = (0.05-999) in steps of 0.01	-
Time delay to reset, IEC inverse time	(0.000-60.000) s	± 0.5% of set time ± 10 ms
IEC Normal Inverse	A=0.14, P=0.02	IEC 60255-151, 5% + 40 ms
IEC Very inverse	A=13.5, P=1.0	
IEC Inverse	A=0.14, P=0.02	
IEC Extremely inverse	A=80.0, P=2.0	
IEC Short time inverse	A=0.05, P=0.04	
IEC Long time inverse	A=120, P=1.0	
Programmable characteristic Operate characteristic: $t = \left(\frac{A}{\left(I^P - C\right)} + B\right) \cdot k$ Reset characteristic: $t = \frac{TR}{\left(I^{PR} - CR\right)} \cdot k$ $I = I_{measured}/I_{set}$	k = (0.05-999) in steps of 0.01 A=(0.005-200.000) in steps of 0.001 B=(0.00-20.00) in steps of 0.01 C=(0.1-10.0) in steps of 0.1 P=(0.005-3.000) in steps of 0.001 TR=(0.005-100.000) in steps of 0.001 CR=(0.1-10.0) in steps of 0.1 PR=(0.005-3.000) in steps of 0.001	

Table 66. RI and RD type inverse time characteristics

Function	Range or value	Accuracy
RI type inverse characteristic $t = \frac{1}{0.339 - \frac{0.236}{I}} \cdot k$ $I = I_{measured}/I_{set}$	k = (0.05-999) in steps of 0.01	IEC 60255-151, 5% + 40 ms
RD type logarithmic inverse characteristic $t = 5.8 - \left(1.35 \cdot In \frac{I}{k}\right)$ $I = I_{measured}/I_{set}$	k = (0.05-999) in steps of 0.01	

Table 67. Inverse time characteristics for overvoltage protection

Function	Range or value	Accuracy
Type A curve: $t = \frac{k}{\left(\frac{U - U>}{U>}\right)}$ U> = U_{set} U = $U_{measured}$	k = (0.05-1.10) in steps of 0.01	5% +40 ms
Type B curve: $t = \frac{k \cdot 480}{\left(32 \cdot \frac{U - U>}{U>} - 0.5\right)^{2.0} - 0.035}$	k = (0.05-1.10) in steps of 0.01	
Type C curve: $t = \frac{k \cdot 480}{\left(32 \cdot \frac{U - U>}{U>} - 0.5\right)^{3.0} - 0.035}$	k = (0.05-1.10) in steps of 0.01	
Programmable curve: $t = \frac{k \cdot A}{\left(B \cdot \frac{U - U>}{U>} - C\right)^{P}} + D$	k = (0.05-1.10) in steps of 0.01 A = (0.005-200.000) in steps of 0.001 B = (0.50-100.00) in steps of 0.01 C = (0.0-1.0) in steps of 0.1 D = (0.000-60.000) in steps of 0.001 P = (0.000-3.000) in steps of 0.001	

Table 68. Inverse time characteristics for undervoltage protection

Function	Range or value	Accuracy
Type A curve: $t = \frac{k}{\left(\frac{U < -U}{U <}\right)}$ U< = U_{set} U = $UV_{measured}$	k = (0.05-1.10) in steps of 0.01	5% +40 ms
Type B curve: $t = \frac{k \cdot 480}{\left(32 \cdot \frac{U < -U}{U <} - 0.5\right)^{2.0}} + 0.055$ U< = U_{set} U = $U_{measured}$	k = (0.05-1.10) in steps of 0.01	
Programmable curve: $t = \left[\frac{k \cdot A}{\left(B \cdot \frac{U < -U}{U <} - C\right)^{P}}\right] + D$ U< = U_{set} U = $U_{measured}$	k = (0.05-1.10) in steps of 0.01 A = (0.005-200.000) in steps of 0.001 B = (0.50-100.00) in steps of 0.01 C = (0.0-1.0) in steps of 0.1 D = (0.000-60.000) in steps of 0.001 P = (0.000-3.000) in steps of 0.001	

19. Ordering

Guidelines
Carefully read and follow the set of rules to ensure problem-free order management.
Please refer to the available functions table for included application functions.
PCM600 can be used to make changes and/or additions to the delivered factory configuration of the pre-configured.

To obtain the complete ordering code, please combine code from the tables, as given in the example below.

Example code: RES670*1.2-A20-A01A02B12C05D01D03E01F02H09-B1-X0-C-B-KA-B3X0-A-ABC-X-XD. Using the code of each position #1-12 specified as RES670*1-2 2-3 3 3 3 3-4-5-6-7 7-8-9 9 9-10 10 10 10 10 10 10 10 10 10 10-11 11 11 11 11 11-12

#	1	-	2		-	3					-	4	-	5	6	-	7		-	8	-
RES670*		-			-						-		-			-			.		-

9			-	10											-	11						-	12
			-												-							-	

	Position	
SOFTWARE	**#1**	**Notes and Rules**
Version number		
Version no	1.2	
Selection for position #1.		

Configuration alternatives	#2		Notes and Rules
3Ix1U phasors	A20		
6Ix2U phasors	B20		
ACT configuration			
ABB standard configuration		X00	
Selection for position #2.			

Software options	#3					Notes and Rules
No option	X00					All fields in the ordering form do not need to be filled in
Current protection - PMU	C25					
General current and voltage protection - PMU		F03				
Second system supervision, single busbar			G01			Note: Not in B20
Second system supervision, double busbar				G02		Note: Not in A20
IEC 62439-3 Edition 2 parallel redundancy protocol					P02	
Selection for position #3						

First local HMI user dialogue language	#4	Notes and Rules
HMI language, English IEC	B1	
HMI language, English US	B2	
Selection for position #4.		

Casing	#5	Notes and Rules
1/1 x 19" case 2 TRM slots	E	
Selection for position #5.	E	

Mounting details with IP40 of protection from the front	#6	Notes and Rules
No mounting kit included	X	
19" rack mounting kit for 1/1 x 19" case	C	
Wall mounting kit	D	Note: Wall mounting not recommended with communication modules with fibre connection (OEM)
Flush mounting kit	E	
Flush mounting kit + IP54 mounting seal	F	
Selection for position #6.		

Connection type for Power supply, Input/output and Communication modules	#7		Notes and Rules
Compression terminals	K		
Auxiliary power supply			
24-60 VDC		A	
90-250 VDC		B	
Selection for position #7.	K		

Human machine hardware interface	#8	Notes and Rules
Medium size - graphic display, IEC keypad symbols	B	
Medium size - graphic display, ANSI keypad symbols	C	
Selection for position #8.		

Connection type for Analog modules	#9			Notes and Rules
Compression terminals	A			
Ringlug terminals	B			
Analog system				
First TRM, 9I+3U 1A, 110/220V		3		
First TRM, 9I+3U 5A, 110/220V		4		
First TRM, 5I, 1A+4I, 5A+3U, 110/220V		5		
No second TRM included			X0	Note: B20 must include a second TRM
Second TRM, 9I+3U 1A, 110/220V			3	Note: Not in A20
Second TRM, 9I+3U 5A, 110/220V			4	Note: Not in A20
Second TRM, 5I, 1A+4I, 5A+3U, 110/220V			5	Note: Not in A20
Selection for position #9.				

Binary input/output module, mA and time synchronization boards. Note: 1BIM and 1 BOM included.	#10											Notes and Rules
For pulse counting, for example kWh metering, the BIM with enhanced pulse counting capabilities must be used.												
Slot position (rear view)	X31	X41	X51	X61	X71	X81	X91	X101	X111	X121	X131	Note: Max 11 positions in 1/1 rack with 2 TRM
1/1 Case with 2 TRM	▮	▮	▮	▮	▮	▮	▮	▮	▮	▮	▮	
No board in slot			X	X	X	X	X	X	X	X	X	
Binary output module 24 output relays (BOM)		A	A	A	A	A	A	A	A	A	A	Note: Maximum 4 (BOM+SOM +MIM) boards.
BIM 16 inputs, RL24-30 VDC, 50 mA	B 1		B 1	B 1	B 1	B 1	B 1	B 1	B 1	B 1	B 1	
BIM 16 inputs, RL48-60 VDC, 50 mA	C 1		C 1	C 1	C 1	C 1	C 1	C 1	C 1	C 1	C 1	
BIM 16 inputs, RL110-125 VDC, 50 mA	D 1		D 1	D 1	D 1	D 1	D 1	D 1	D 1	D 1	D 1	
BIM 16 inputs, RL220-250 VDC, 50 mA	E 1		E 1	E 1	E 1	E 1	E 1	E 1	E 1	E 1	E 1	
BIM 16 inputs, RL24-30 VDC for pulse counting			F	F	F	F	F	F	F	F	F	
BIM 16 inputs, RL48-60 VDC for pulse counting			G	G	G	G	G	G	G	G	G	
BIM 16 inputs, RL110-125 VDC for pulse counting			H	H	H	H	H	H	H	H	H	
BIM 16 inputs, RL220-250 VDC for pulse counting			K	K	K	K	K	K	K	K	K	
mA input module MIM 6 channels			R	R	R	R	R	R	R	R	R	Note: Max 4 (BOM+SOM+MIM) board in 1/1 case.
SOM Static output module, 12 outputs, 48-60 VDC			T1	T1	T1	T1	T1	T1	T1	T1	T1	
SOM static outputs module, 12 outputs, 110-250 VDC			T2	T2	T2	T2	T2	T2	T2	T2	T2	
Selection for position #10.												

Remote end communication, DNP serial comm. and time synchronization modules	#11						Notes and Rules
Slot position (rear view)	X312	X313	X302	X303	X322	X323	
Available slots in 1/1 case with 2 TRM	▮	▮	▮	▮	▮	▮	
No remote communication board included	X	X	X	X	X	X	
GPS time module GTM	S						Rule: One, and only one, Time synchronization must be ordered.
IRIG-B Time synchronization module			F				
Galvanic RS485 communication module	G	G	G	G	G	G	
Selection for position #11.							

Serial communication unit for station communication	#12	Notes and Rules
Slot position (rear view)	X311	
Optical ethernet module, 2 channel glass	E	
Selection for position #12.	E	

Guidelines

Carefully read and follow the set of rules to ensure problem-free order management. Be aware that certain functions can only be ordered in combination with other functions and that some functions require specific hardware selections.

Please refer to the available functions table for included application functions.

Accessories

GPS antenna and mounting details

GPS antenna, including mounting kits	Quantity:	☐	1MRK 001 640-AA
Cable for antenna, 20 m	Quantity:	☐	1MRK 001 665-AA
Cable for antenna, 40 m	Quantity:	☐	1MRK 001 665-BA

Test switch

The test system COMBITEST intended for use with the IED 670 products is described in 1MRK 512 001-BEN and 1MRK 001024-CA. Please refer to the website: www.abb.com/substationautomation for detailed information.

1 TRM Single busbar/2 TRMs Double busbar with 6 bays with internal neutral on currents circuits (ordering number RK926 315–AN).

1 TRM Single busbar/2 TRMs Double busbar with 6 bays with external neutral on currents circuits (ordering number RK926 315–DB).

1 TRM/2 TRM with internal neutral on currents circuits (ordering number RK926 315–AM).

1 TRM/2 TRM with external neutral on currents circuits (ordering number RK926 315–DC).

Test switches type RTXP 24 is ordered separately. Please refer to Section "Related documents" for reference to corresponding documents.

RHGS 6 Case or RHGS 12 Case with mounted RTXP 24 and the on/off switch for dc-supply are ordered separately. Please refer to Section "Related documents" for reference to corresponding documents.

Protection cover

Protective cover for rear side of terminal, 6U, 1/1 x 19”	Quantity:	☐	1MRK 002 420-AA

Combiflex

Key switch for settings

Key switch for lock-out of settings via LCD-HMI	Quantity:		1MRK 000 611-A

Note: To connect the key switch, leads with 10 A Combiflex socket on one end must be used.

Configuration and monitoring tools

Front connection cable between LCD-HMI and PC	Quantity:		1MRK 001 665-CA
LED Label special paper A4, 1 pc	Quantity:		1MRK 002 038-CA
LED Label special paper Letter, 1 pc	Quantity:		1MRK 002 038-DA

Manuals

Note: One (1) IED Connect CD containing user documentation (Operator's manual, Technical reference manual, Installation and commissioning manual, Application manual and Getting started guide), Connectivity packages and LED label template is always included for each IED.

Rule: Specify additional quantity of IED Connect CD requested.	Quantity:		1MRK 002 290-AB

User documentation

Rule: Specify the number of printed manuals requested

Operator's manual	IEC	Quantity:		1MRK 511 251–UEN
	ANSI	Quantity:		1MRK 511 251–UUS
Technical reference manual	IEC	Quantity:		1MRK 511 250–UEN
	ANSI	Quantity:		1MRK 511 250–UUS
Installation and commissioning manual	IEC	Quantity:		1MRK 511 252–UEN
	ANSI	Quantity:		1MRK 511 252–UUS
Application manual	IEC	Quantity:		1MRK 511 253–UEN
	ANSI	Quantity:		1MRK 511 253–UUS
Engineering manual, 670 series		Quantity:		1MRK 511 240-UEN

Reference information

For our reference and statistics we would be pleased to be provided with the following application data:

Country: End user:

Station name: Voltage level: kV

Related documents

Documents related to RES670	Identity number
Operator's manual	1MRK 511 251-UEN
Installation and commissioning manual	1MRK 511 252-UEN
Technical reference manual	1MRK 511 250-UEN
Application manual	1MRK 511 253-UEN
Product guide pre-configured	1MRK 511 266-BEN
Connection and Installation components	1MRK 513 003-BEN
Test system, COMBITEST	1MRK 512 001-BEN
Accessories for 670 series IEDs	1MRK 514 012-BEN
670 series SPA and signal list	1MRK 500 092-WEN
IEC 61850 Data objects list for 670 series	1MRK 500 091-WEN
Engineering manual 670 series	1MRK 511 240-UEN
Communication set-up for Relion 670 series	1MRK 505 260-UEN

More information can be found on www.abb.com/substationautomation.

Contact us

ABB AB
Substation Automation Products
SE-721 59 Västerås, Sweden
Phone +46 (0) 21 32 50 00
Fax +46 (0) 21 14 69 18

www.abb.com/substationautomation

Power and productivity
for a better world™