MEDIUM VOLTAGE INSTRUMENT TRANSFORMERS AND SENSORS

Instrument transformer reference guide

Metering and relaying applications for the electric power industry

General index

600 volt current transformers		
Primary current	**Type**	**Page**
50–1000	IMC	10–11
100–800	CBT-S, CBT/1	12–13
100–800	CBT-H	14–15
200–600	CSF	16–17
200–800	CSH	18
200–300	CMS	19
50–1200	CMF-S, CMF	20–23
100–4000	CMV-S, CMV	24–25
200–4000	CMV-Hi Temp	26–27
600–4000	CLC-S, CLC	28–37
50–4000	DEH-705	38–39
1000–6000	CLE	40–41
100–6000	CEH-636	42–43
600–4000	RLC	44–47
50–6000	SCT-983	48–49
200–4000	RMB-644, RMB-644A	50–51
400–2000	RMBX-644A	52–53

600 volt voltage transformers		
Primary voltage	**Type**	**Page**
240–600	PPW, PPD	54–55
120–600	PPM	56–57

5 kV–34.5 kV current transformers		
Class	**Type**	**Page**
5 kV indoor	KIR-60	58–59
5 kV indoor	RMB-631, RMBX-631	60–63
5 kV indoor	KIT-60	64–65
5 kV outdoor	KOR-60	66–67
5 kV outdoor	KOT-60	68–69
8.7 kV indoor	STBB-991R	70–71
8.7 kV indoor	KIR-75	72–73
8.7 kV indoor	KIT-75	74–75
8.7 kV outdoor	KOR-75	76–77
8.7 kV outdoor	KOT-75	78–79
15 kV indoor	KIR-11	80–81
15 kV indoor	KIR-11ES	82–83
15 kV indoor	KIT-11	84–85
15 kV outdoor	KON-11ER, KON-11	86–87
15 kV outdoor	KOR-11	88–89
15 kV outdoor	KOR-11E	90–91
15 kV outdoor	KOT-11	92–93

5 kV–34.5 kV current transformers (cont'd)		
Class	**Type**	**Page**
15 kV outdoor	LG-15-585	94–95
15 kV outdoor	LGX-15-585	96–97
15 kV outdoor	LG-15-683	98–99
15 kV outdoor	LGX-15-683	100–101
15 kV outdoor	LG-15-879	102–103
15 kV outdoor	LG-15-6513	104–105
15 kV outdoor	LGX-15-6513	106–107
15 kV outdoor	KOTD-110	108–111
25 kV indoor	KON-12ER, KON-12	112–113
25 kV indoor	KOR-12	114–115
25 kV indoor	KIT-15	116–117
25 kV outdoor	KOT-15	118–119
25 kV outdoor	KOR-15CER	120–121
25 kV outdoor	KOR-15C	122–123
25 kV outdoor	KOR-15CE	124–125
25 kV outdoor	KOTD-150	126–129
25 kV outdoor	LG-25-585	130–131
25 kV outdoor	LGX-25-585	132–133
25 kV outdoor	LG-25-879	134–135
25 kV outdoor	LG-25-6513	136–137
25 kV outdoor	LGX-25-6513	138–139
34.5 kV outdoor	KOR-20ER	140–141
34.5 kV outdoor	KOR-20	142–143
34.5 kV outdoor	KOR-20E	144–145
34.5 kV outdoor	LG-34-879	146–147
34.5 kV outdoor	LGX-34-879	148–149
34.5 kV outdoor	KOTD-200	150–153

5 kV–34.5 kV voltage transformers		
Class	**Type**	**Page**
5 kV indoor	VIY-60	154–155
5 kV outdoor	VOY-60	156–157
8.7 kV indoor	VIZ-75	158–159
8.7 kV indoor	VIZ-75E	160–161
8.7 kV outdoor	VOZ-75B, 75BE	162–163
15 kV indoor	VIL-95, 95S	164–165
15 kV indoor	VIZ-11	166–169
15 kV indoor	VIZ-11E	170–171
15 kV outdoor	VOG-11, VOY-11B	172–173
15 kV outdoor	VOZ-11B, 11BE	174–175
15 kV outdoor	VOZ-11G	176–177
25 kV indoor	VIL-12, 12S	178–179
25 kV indoor	VIZ-12, 12G	180–181
25 kV indoor	VIZ-15, 15G	182–183
25 kV indoor	VIZZ-15, 15G	184–185
25 kV outdoor	VOG-15R, 15B	186–187
25 kV outdoor	VRO-150G	188–189
25 kV outdoor	VOY-15, VOZ-15, 15E	190–191
25 kV outdoor	VOZZ-15, 15G	192–193
34.5 kV indoor	VIZ-20, 20G	194–195
34.5 kV indoor	VOG-20B, 20BR	196-197
34.5 kV outdoor	VOY-20, VOZ-20	198–199
34.5 kV outdoor	VOZZ-20, 20G	200–201

15 kV–34.5 kV combined current and voltage transformers		
Class	**Type**	**Page**
15 kV outdoor	CVC-110BER, CVC-110BRER	202–203
25 kV outdoor	CVC-150, -200	204–205

Custom engineered designs		
Class	**Type**	**Page**
600 volt	Auxiliary CT/VT	206–207
600 volt	ACT-633, ACT-645	208–209
600 volt	APT-646, APT-733	210–211
600 volt	ACT-983	212
600 volt	Type A current balancing	213
600 volt	CO-9740	214–215
600 volt	SP-061	216–217
600 volt	SCADA-BEH	218–219
600 volt	SCADA-DEH	220–221
600 volt	SCADA-CEH	220–221
600 volt	FSR-983	222
600 volt	BYZ-863, BYZ-865	223
600 volt	PSZ-981	224–225
600 volt	PSH-993	226–227
600 volt	PS-981	228–229
600 volt	PH-982	230
600 volt	PSG-981	231
600 volt	GCT-848	232–233

Sensors		
Class	**Type**	**Page**
15 kV current/voltage	VCS-110	234–235
15 kV current	VKS-110	236–237
15, 25, 35 kV voltage	VLS-110, -150, -200	238–239
Submersible current	RSS-1	240–241
Indoor current	KECA 80 C85	242–243
Indoor current split-core	KECA 80 D85	244–245
Indoor current	KECA 80 C184	246–247
Indoor voltage	KEVA 17.5 B21	248–249

Application data	250–253
Accuracy standards	254–255
Instrument transformer and sensor type designations	256–259
Competitor cross-reference	260

General information

The styles listed in this guide represent those most commonly built for electric utilities, but are a small sample of what is offered. **For more information or requests for special designs or units not listed in this guide, please contact your ABB representative**.

VT voltage designations
Voltage class designations may vary slightly by application. For example, units listed as 36 kV in this catalog may have a nominal system voltage rating of 34.5 kV and maximum system voltage rating of 36.5 kV, as per IEEE C57.13, and may be rated for 38 kV if used in switchgear applications.

14400/24940Y
This unit is rated for 14400 operating volts. It can be connected at 14400 volts line-to-ground on a 24940 volt system (line-to-line volts are 24940 V) OR it can be connected line-to-line on a system with 14400 V line-to-line. This unit is not suitable for operation at 24940 volts. The “Y” indicates it has two fully insulated bushings, suitable for line-to-line connection.

14400/24940GY
This unit is rated for 14400 operating volts. It can be connected at 14400 volts line-to-ground on a 24940 V system (line-to-line volts are 24940 V). It CANNOT be connected line-to-line. The “GY” indicates it only has one fully insulated bushing, making it suitable for line-to-ground connection only.

14400/14400Y
This unit is rated for 14400 operating volts. It can be connected at 14400 V line-to-line. This unit can also be connect line-to-ground where the primary and secondary voltage are both divided by 1.73 (√3).

14400/14400GY
This unit is rated for 14400 operating volts; however, it can only be connected line-to-ground. Therefore, the actual operating voltage of the unit is 14400/1.73. The accuracy and thermal ratings of this unit are based on 14400 V. This is typical where there is a relay connected to the unit that should operate when there is a single line-to-ground fault. In this condition, the line-to-ground voltage becomes equal to the line-to-line voltage. The “GY” indicates it only has one fully insulated bushing, making it suitable for line-to-ground connection only.

CT rating factor and VT rated voltage factor
The rating factors (RF) and rated voltage factors (RVF) given in this catalog are listed per the IEEE standard. RF is based on 30 °C ambient temperature unless specified otherwise.

Transformers in this booklet conform to the following standards, where applicable:

- IEEE Standard Requirements for Instrument Transformers, C57.13–1993, C57.13-2008, or C57.13-2016, depending on the particular design.
- IEEE Standard for Instrument Transformers for Metering Purposes, C12.11 (current revision), where applicable.
- IEEE Standard for High Accuracy Instrument Transformers, C57.13.6–2005.
- Compliance with other standards may be available.

Frequencies
Instrument transformers are frequency-dependent devices. **Metering and relaying accuracies for styles listed in this reference guide are based on 60 Hz operation, unless otherwise noted.** Products offered in this catalog may be designed for other frequencies such as 50 Hz.

General information

AccuRange® current transformers
AccuRange current transformers offer low and medium voltage high accuracy, extended range transformers for revenue metering applications. AccuRange products are ONLY for metering applications and not for relaying applications. AccuRange 600 volt current transformers for secondary revenue metering deliver high accuracy and stable performance over a wide load range. Accuracy is guaranteed to exceed the IEEE 0.15S accuracy class and obtain 0.15% accuracy from 1% of nominal current through rating factor.

Medium voltage outdoor insulation material
Outdoor medium voltage instrument transformers and sensors are encapsulated in polyurethane or hydrophobic cycloaliphatic epoxy (HCEP). HCEP is preferred for longer service life in most outdoor applications due to its superior arc track, ozone and ultraviolet-resistive properties.
The hydrophobic surface properties of HCEP also provide excellent performance in wet, humid or polluted environments.

Sensors are vacuum cast in HCEP, while instrument transformers are cast using the automatic pressure gelation (APG) process. APG shortens manufacturing cycle times and ensures product consistency, quality and reliability in outdoor performance.

Medium voltage sensors
Electronic instrument transformers (sensors) offer an alternative way of making the current and voltage measurements. Sensors based on alternative principles have been introduced as successors to conventional instrument transformers in order to significantly reduce size, increase safety and provide greater rating standardization and a wider functionality range. These well known principles can only be fully utilized in combination with versatile electronic relays.

ABB ResiVolt™ technology
Units with ABB ResiVolt technology are designed to withstand challenging environments where very fast transient (VFT) over-voltages are present. Ever changing grid configurations and focus on reliability, efficiency, sustainability and capacity have led to a significant increase of reclosers, switching devices and capacitors that can introduce VFT events.

IMC

600 volt
Indoor/outdoor
10 kV BIL

UL Recognized component

Primary amps	Style number	IEEE metering accuracy B-0.1	B-0.2	B-0.5
50	7524A98G11	2.4	—	—
100	7524A98G01	1.2	—	—
150	7524A98G02	1.2	1.2	—
200	7524A98G03	0.6	1.2	2.4
250	7524A98G04	0.6	1.2	2.4
300	7524A98G05	0.6	0.6	0.6
400	7524A98G06	0.6	0.6	0.6
500	7524A98G07	0.3	0.3	0.6
600	7524A98G08	0.3	0.3	0.6
800	7524A98G09	0.3	0.3	0.3
1000	7524A98G10	0.3	0.3	0.3

Optional accessories:
Mounting feet (set of 2): 9628A05G01

Window diam. (in.)	Rating factor 30 °C	Rating factor 55 °C	Height (in.)	Width (in.)	Length (in.)	Weight (lbs.)
2.5	2.0	1.5	5.47	4.72	2.0	3.5
2.5	2.0	1.5	5.47	4.72	2.0	3.5
2.5	2.0	1.5	5.47	4.72	2.0	3.5
2.5	2.0	1.5	5.47	4.72	2.0	3.5
2.5	2.0	1.5	5.47	4.72	2.0	3.5
2.5	2.0	1.5	5.47	4.72	2.0	3.5
2.5	2.0	1.5	5.47	4.72	2.0	3.5
2.5	2.0	1.5	5.47	4.72	2.0	3.5
2.5	1.5	1.2	5.47	4.72	2.0	3.5
2.5	1.33	1.0	5.47	4.72	2.0	3.5
2.5	1.0	0.75	5.47	4.72	2.0	3.5

CBT-S and CBT/1

600 volt
Indoor/outdoor
10 kV BIL

The CBT-S is part of ABB's AccuRange® current transformer portfolio of products with 0.15% accuracy from 1% of nominal current through rating factor.

	Primary amps	Style number	IEEE metering accuracy	Base type
CBT-S	600	923A496G01	0.15SB-0.2	None
	600	923A496G02	0.15SB-0.2	Flat
	600	923A496G03	0.15SB-0.2	High
	600	923A516G01	0.15SB-0.2	None
	600	923A516G02	0.15SB-0.2	Flat
	600	923A516G03	0.15SB-0.2	High

	Primary amps	Style number	IEEE metering accuracy B-0.1	B-0.2	B-0.5
CBT/1	100	7882A77G01	0.3	—	—
	200	7882A77G04	0.3	0.3	—
	300	7882A77G07	0.3	0.3	—
	400	7882A77G10	0.3	0.3	—
	500	7882A77G13	0.3	0.3	—
	600	7882A77G16	0.3	0.3	—
No base	800	7882A77G19	0.3	0.3	—

	100	7882A77G02	0.3	—	—
	200	7882A77G05	0.3	0.3	—
	300	7882A77G08	0.3	0.3	—
	400	7882A77G11	0.3	0.3	—
	500	7882A77G14	0.3	0.3	—
	600	7882A77G17	0.3	0.3	—
Flat base	800	7882A77G20	0.3	0.3	—

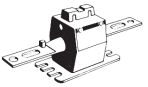

	100	7882A77G03	0.3	—	—
	200	7882A77G06	0.3	0.3	—
	300	7882A77G09	0.3	0.3	—
	400	7882A77G12	0.3	0.3	—
	500	7882A77G15	0.3	0.3	—
	600	7882A77G18	0.3	0.3	—
High base	800	7882A77G21	0.3	0.3	—

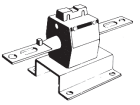

Product bulletins:
CBT-S: 1VAP428112-DB
CBT/1: 1VAP428111-DB

Note: Bar dimensions are dependent upon rating. Refer to the product bulletin or contact your ABB representative for more information.

Window diam. (in.)	Rating factor 30 °C	Rating factor 55 °C	Height (in.)	Width (in.)	Length (in.)	Weight (lbs.)
With bar	2.0	1.5	4.51	3.31	12.12	6.5
With bar	2.0	1.5	4.60	3.37	12.12	6.5
With bar	2.0	1.5	6.50	5.25	12.12	.7
1.64	2.0	1.5	4.51	3.31	4.63	4.0
1.64	2.0	1.5	4.60	3.37	4.63	4.0
1.64	2.0	1.5	6.50	5.25	4.63	4.2

Window diam. (in.)	Rating factor 30 °C	Rating factor 55 °C	Height (in.)	Width (in.)	Length (in.)	Weight (lbs.)
—	4.0	3.0	4.51	3.31	11.87	2.8
—	2.0	1.5	4.51	3.31	11.87	2.8
—	2.0	1.5	4.51	3.31	11.87	3.1
—	2.0	1.5	4.51	3.31	11.87	3.1
—	2.0	1.5	4.51	3.31	12.12	3.8
—	2.0	1.5	4.51	3.31	12.12	4.0
—	1.5	1.2	4.51	3.31	12.12	4.0
—	4.0	3.0	4.60	3.37	11.87	2.8
—	2.0	1.5	4.60	3.37	11.87	2.8
—	2.0	1.5	4.60	3.37	11.87	3.1
—	2.0	1.5	4.60	3.37	11.87	3.1
—	2.0	1.5	4.60	3.37	12.12	3.8
—	2.0	1.5	4.60	3.37	12.12	4.0
—	1.5	1.2	4.60	3.37	12.12	4.0
—	4.0	3.0	6.50	5.25	11.87	3.0
—	2.0	1.5	6.50	5.25	11.87	3.0
—	2.0	1.5	6.50	5.25	11.87	3.3
—	2.0	1.5	6.50	5.25	11.87	3.3
—	2.0	1.5	6.50	5.25	12.12	4.0
—	2.0	1.5	6.50	5.25	12.12	4.2
—	1.5	1.2	6.50	5.25	12.12	4.2

CBT-H

600 volts
Indoor/outdoor
10 kV BIL

	Primary amps	Style number	IEEE metering accuracy B-0.1	B-0.2	B-0.5
	200	7882A78G04	0.3	0.3	0.3
	300	7882A78G07	0.3	0.3	0.3
	400	7882A78G10	0.3	0.3	0.3
	500	7882A78G13	0.3	0.3	0.3
	600	7882A78G16	0.3	0.3	0.3
No base	800	7882A78G19	0.3	0.3	0.3

	200	7882A78G05	0.3	0.3	0.3
	300	7882A78G08	0.3	0.3	0.3
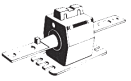	400	7882A78G11	0.3	0.3	0.3
	500	7882A78G14	0.3	0.3	0.3
	600	7882A78G17	0.3	0.3	0.3
Flat base	800	7882A78G20	0.3	0.3	0.3

	200	7882A78G06	0.3	0.3	0.3
	300	7882A78G09	0.3	0.3	0.3
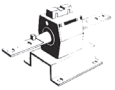	400	7882A78G12	0.3	0.3	0.3
	500	7882A78G15	0.3	0.3	0.3
	600	7882A78G18	0.3	0.3	0.3
High base	800	7882A78G21	0.3	0.3	0.3

Note: Bar dimensions are dependent upon rating. Refer to the product bulletin or contact your ABB representative for more information.

Window diam. (in.)	Rating factor 30 °C	Rating factor 55 °C	Height (in.)	Width (in.)	Length (in.)	Weight (lbs.)
—	2.0	1.5	4.62	3.37	11.87	4.2
—	2.0	1.5	4.62	3.37	11.87	3.4
—	2.0	1.5	4.62	3.37	11.87	3.4
—	2.0	1.5	4.62	3.37	12.12	4.3
—	2.0	1.5	4.62	3.37	12.12	4.4
—	1.5	1.2	4.62	3.37	12.12	4.4

—	2.0	1.5	4.62	3.37	11.87	4.2
—	2.0	1.5	4.62	3.37	11.87	3.4
—	2.0	1.5	4.62	3.37	11.87	3.4
—	2.0	1.5	4.62	3.37	12.12	4.3
—	2.0	1.5	4.62	3.37	12.12	4.4
—	1.5	1.2	4.62	3.37	12.12	4.4

—	2.0	1.5	6.63	5.25	11.87	4.3
—	2.0	1.5	6.63	5.25	11.87	3.5
—	2.0	1.5	6.63	5.25	11.87	3.5
—	2.0	1.5	6.63	5.25	12.12	4.4
—	2.0	1.5	6.63	5.25	12.12	4.5
—	1.5	1.2	6.63	5.25	12.12	4.5

CSF

600 volts
Indoor/outdoor
10 kV BIL

	Primary amps	Style number	IEEE metering accuracy B-0.1	B-0.2	B-0.5
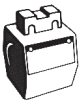 No base	200	7524A85G01	0.3	0.3	—
	300	7524A85G02	0.3	0.3	—
	400	7524A83G02	0.3	0.3	—
	600	7524A83G03	0.3	0.3	—

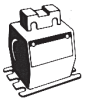 Flat base	200	7524A85G03	0.3	0.3	—
	300	7524A85G04	0.3	0.3	—
	400	7524A83G05	0.3	0.3	—
	600	7524A83G06	0.3	0.3	—

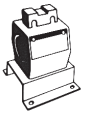 High base	200	7524A85G05	0.3	0.3	—
	300	7524A85G06	0.3	0.3	—
	400	7524A83G08	0.3	0.3	—
	600	7524A83G09	0.3	0.3	—

Optional accessories:

Primary bar for 1.5" window	9628A05G09
Primary bar for 2.0" window	9628A05G10

Window diam. (in.)	Rating factor 30 °C	Rating factor 55 °C	Height (in.)	Width (in.)	Length (in.)	Weight (lbs.)
1.5	3.0	2.0	4.85	3.5	3.32	3.75
1.5	2.0	1.5	4.85	3.5	3.32	3.75
2.0	2.0	1.5	4.85	3.5	3.32	2.25
2.0	1.5	1.2	4.85	3.5	3.32	2.25

1.5	3.0	2.0	4.94	3.5	5.25	4.0
1.5	2.0	1.5	4.94	3.5	5.25	4.0
2.0	2.0	1.5	4.94	3.5	5.25	2.5
2.0	1.5	1.2	4.94	3.5	5.25	2.5

1.5	3.0	2.0	6.54	5.25	4.50	4.0
1.5	2.0	1.5	6.54	5.25	4.50	4.0
2.0	2.0	1.5	6.54	5.25	4.50	2.5
2.0	1.5	1.2	6.54	5.25	4.50	2.5

Product bulletin:
1VAP428141-DB

CSH

600 volts
Indoor/outdoor
10 kV BIL

	Primary amps	Style number	IEEE metering accuracy B-0.1	B-0.2	B-0.5
CSH	200	7526A90G01	0.3	0.3	0.3
	300	7526A90G02	0.3	0.3	0.3
	400	7526A90G03	0.3	0.3	0.3
	500	7526A90G04	0.3	0.3	0.3
	600	7526A90G05	0.3	0.3	0.3
No base	800	7526A90G06	0.3	0.3	0.3

	200	7526A90G11	0.3	0.3	0.3
	300	7526A90G12	0.3	0.3	0.3
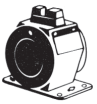	400	7526A90G13	0.3	0.3	0.3
	500	7526A90G14	0.3	0.3	0.3
	600	7526A90G15	0.3	0.3	0.3
Flat base	800	7526A90G16	0.3	0.3	0.3

	200	7526A90G21	0.3	0.3	0.3
	300	7526A90G22	0.3	0.3	0.3
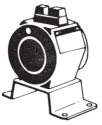	400	7526A90G23	0.3	0.3	0.3
	500	7526A90G24	0.3	0.3	0.3
	600	7526A90G25	0.3	0.3	0.3
High base	800	7526A90G26	0.3	0.3	0.3

	Primary amps	Style number	IEEE metering accuracy B-0.1	B-0.2	B-0.5
CMS	200	7524A79G01	0.3	0.3	—
No base	300	7524A79G02	0.3	0.3	0.3

	200	7524A79G03	0.3	0.3	—
Flat base	300	7524A79G04	0.3	0.3	0.3

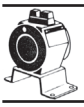	200	7524A79G05	0.3	0.3	—
High base	300	7524A79G06	0.3	0.3	0.3

Product bulletin:
1VAP428151-DB

CMS

600 volts
Indoor/outdoor
10 kV BIL

Window diam. (in.)	Rating factor 30 °C	Rating factor 55 °C	Height (in.)	Width (in.)	Length (in.)	Weight (lbs.)
1.5	3.0	2.2	5.41	4.0	3.87	7.25
1.5	2.0	1.5	5.41	4.0	3.87	7.25
2.0	2.0	1.5	5.41	4.0	3.87	6.0
2.0	2.0	1.5	5.41	4.0	3.87	5.5
2.0	2.0	1.5	5.41	4.0	3.87	5.2
2.0	1.5	1.2	5.41	4.0	3.87	5.0

1.5	3.0	2.2	5.53	5.62	3.87	7.50
1.5	2.0	1.5	5.53	5.62	3.87	7.50
2.0	2.0	1.5	5.53	5.62	3.87	6.25
2.0	2.0	1.5	5.53	5.62	3.87	5.75
2.0	2.0	1.5	5.53	5.62	3.87	5.45
2.0	1.5	1.2	5.53	5.62	3.87	5.25

1.5	3.0	2.2	7.09	5.25	4.50	7.50
1.5	2.0	1.5	7.09	5.25	4.50	7.50
2.0	2.0	1.5	7.09	5.25	4.50	6.25
2.0	2.0	1.5	7.09	5.25	4.50	5.75
2.0	2.0	1.5	7.09	5.25	4.50	5.45
2.0	1.5	1.2	7.09	5.25	4.50	5.25

Window diam. (in.)	Rating factor 30 °C	Rating factor 55 °C	Height (in.)	Width (in.)	Length (in.)	Weight (lbs.)
2.0	3.0	2.00	5.50	4.00	3.87	5.50
2.0	2.0	1.50	5.50	4.00	3.87	5.50

2.0	3.0	2.00	5.59	5.25	3.87	5.75
2.0	2.0	1.50	5.59	5.25	3.87	5.75

2.0	3.0	2.00	7.09	5.25	4.50	5.75
2.0	2.0	1.50	7.09	5.25	4.50	5.75

CMF-S and CMF

600 volts
Indoor/outdoor
10 kV BIL

The CMF-S is part of ABB's AccuRange® current transformer portfolio of products with 0.15% accuracy from 1% of nominal current through rating factor.

	Primary amps	Style number with flat base	Style number with high base	IEEE metering accuracy
CMF-S	300	923A497G12	923A497G13	0.15SB-0.1
	600	923A497G01	923A497G02	0.15SB-0.5
	600	923A497G03	923A497G04	0.15SB-0.2
	800	923A497G10	923A497G11	0.15SB-0.5
	1000	923A497G05	923A497G06	0.15SB-0.5

	Primary amps	Style number	IEEE metering accuracy			
			B-0.1	B-0.2	B-0.5	B-1.8
CMF	50	4460A30G25	1.2	—	—	—
	100	4460A30G23	0.3	—	—	—
	200	4460A30G01	0.3	0.3	0.3	—
	400	4460A30G03	0.3	0.3	0.3	—
	500	4460A30G05	0.3	0.3	0.3	—
	600	4460A30G07	0.3	0.3	0.3	—
	800	4460A30G09	0.3	0.3	0.3	—
	1000	4460A30G21	0.3	0.3	0.3	—
	1200	4460A30G19	0.3	0.3	0.3	0.3
	200/400	4460A30G11	0.3/0.3	0.3/0.3	0.3/0.3	—
	300/600	4460A30G13	0.3/0.3	0.3/0.3	0.3/0.3	—
	400/800	4460A30G15	0.3/0.3	0.3/0.3	0.3/0.3	—

With window and flat base

	50	4460A30G26	1.2	—	—	—
	100	4460A30G24	0.3	—	—	—
	200	4460A30G02	0.3	0.3	0.3	—
	400	4460A30G04	0.3	0.3	0.3	—
	500	4460A30G06	0.3	0.3	0.3	—
	600	4460A30G08	0.3	0.3	0.3	—
	800	4460A30G10	0.3	0.3	0.3	—
	1000	4460A30G22	0.3	0.3	0.3	—
	1200	4460A30G20	0.3	0.3	0.3	0.3
	200/400	4460A30G12	0.3/0.3	0.3/0.3	0.3/0.3	—
	300/600	4460A30G14	0.3/0.3	0.3/0.3	0.3/0.3	—
	400/800	4460A30G16	0.3/0.3	0.3/0.3	0.3/0.3	—

With window and high base

Bar assemblies:
One-hole, one-slot bar assembly (2.5" window): 9628A05G35
One-hole, one-slot bar assembly (3.06" window): 9628A05G36

Note: Conduit box available for CMF. Contact your ABB representative.

Window diam. (in.)	Rating factor 30 °C	Rating factor 55 °C	Height: flat base (in.)	Height: high base (in.)	Width (in.)	Length (in.)	Weight (lbs.)
3.06	3.0	2.2	7.12	7.91	5.25	4.50	8.5
3.06	2.0	1.5	7.12	7.91	5.25	4.50	8.5
3.06	3.0	2.0	7.12	7.91	5.25	4.50	8.5
3.06	2.0	1.5	7.12	7.91	5.25	4.50	8.5
3.06	2.0	1.5	7.12	7.91	5.25	4.50	8.5

Window diam. (in.)	Rating factor 30 °C	Rating factor 55 °C	Height (in.)	Width (in.)	Length (in.)	Weight (lbs.)
2.50	4.0	3.0	7.12	5.25	4.50	12.3
2.50	4.0	3.0	7.12	5.25	4.50	12.3
2.50	4.0	3.0	7.12	5.25	4.50	12.3
3.06	4.0	3.0	7.12	5.25	4.50	8.5
3.06	3.0	2.2	7.12	5.25	4.50	8.5
3.06	2.0	1.5	7.12	5.25	4.50	8.5
3.06	2.0	1.5	7.12	5.25	4.50	8.3
3.06	2.0	1.5	7.12	5.25	4.50	8.3
3.06	1.5	1.2	7.12	5.25	4.50	8.3
2.50	4.0/2.0	3.0/1.5	7.12	5.25	4.50	12.4
3.06	3.0/2.0	2.2/1.5	7.12	5.25	4.50	9.7
3.06	2.0/2.0	1.5/1.5	7.12	5.25	4.50	8.7
2.50	4.0	3.0	7.91	5.25	4.50	12.3
2.50	4.0	3.0	7.91	5.25	4.50	12.3
2.50	4.0	3.0	7.91	5.25	4.50	12.3
3.06	4.0	3.0	7.91	5.25	4.50	8.5
3.06	3.0	2.2	7.91	5.25	4.50	8.5
3.06	2.0	1.5	7.91	5.25	4.50	8.5
3.06	2.0	1.5	7.91	5.25	4.50	8.3
3.06	2.0	1.5	7.91	5.25	4.50	8.3
3.06	1.5	1.2	7.91	5.25	4.50	8.3
2.50	4.0/2.0	3.0/1.5	7.91	5.25	4.50	12.4
3.06	3.0/2.0	2.2/1.5	7.91	5.25	4.50	9.7
3.06	2.0/2.0	1.5/1.5	7.91	5.25	4.50	8.7

CMF-S and CMF

600 volts
Indoor/outdoor
10 kV BIL
With primary bar

The CMF-S is part of ABB's AccuRange® current transformer portfolio of products with 0.15% accuracy from 1% of nominal current through rating factor.

	Primary amps	Style number with flat base	Style number with high base	IEEE metering accuracy
CMF–S	600	923A517G01	923A517G02	0.15SB-0.5
	600	923A517G03	923A517G04	0.15SB-0.2
	1000	923A517G05	923A517G06	0.15SB-0.5

With primary bar and flat base

	Primary amps	Style number	IEEE metering accuracy B-0.1	B-0.2	B-0.5	B-1.8
CMF	100	7525A01G25	0.3	—	—	—
	200	7525A01G01	0.3	0.3	0.3	—
	400	7525A01G03	0.3	0.3	0.3	—
	500	7525A01G05	0.3	0.3	0.3	—
	600	7525A01G07	0.3	0.3	0.3	—
	800	7525A01G09	0.3	0.3	0.3	—
	1000	7525A01G23	0.3	0.3	0.3	—
	1200	7525A01G19	0.3	0.3	0.3	0.3
	200/400	7525A01G11	0.3/0.3	0.3/0.3	0.3/0.3	—
	300/600	7525A01G13	0.3/0.3	0.3/0.3	0.3/0.3	—
	400/800	7525A01G15	0.3/0.3	0.3/0.3	0.3/0.3	—

With primary bar and high base

	100	7525A01G26	0.3	—	—	—
	200	7525A01G02	0.3	0.3	0.3	—
	400	7525A01G04	0.3	0.3	0.3	—
	500	7525A01G06	0.3	0.3	0.3	—
	600	7525A01G08	0.3	0.3	0.3	—
	800	7525A01G10	0.3	0.3	0.3	—
	1000	7525A01G24	0.3	0.3	0.3	—
	1200	7525A01G20	0.3	0.3	0.3	0.3
	200/400	7525A01G12	0.3/0.3	0.3/0.3	0.3/0.3	—
	300/600	7525A01G14	0.3/0.3	0.3/0.3	0.3/0.3	—
	400/800	7525A01G16	0.3/0.3	0.3/0.3	0.3/0.3	—

Additional styles available with 4-hole NEMA compliant primary bar.
Note: conduit box available. Contact your ABB representative.

Bus bar dimensions (in.)

Primary Amps	A	B
50 - 200	2.0"	0.25"
> 200	2.5"	0.38"

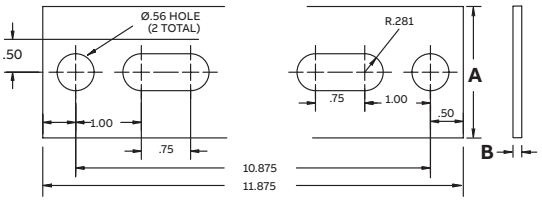

Rating factor 30 °C	Rating factor 55 °C	Height: flat base (in.)	Height: high base (in.)	Width (in.)	Length (in.)	Weight (lbs.)
2.0	1.5	7.12	7.91	5.25	11.88	10.5
3.0	2.0	7.12	7.91	5.25	11.88	10.5
2.0	1.5	7.12	7.91	5.25	11.88	10.5

Window diam. (in.)	Rating factor 30 °C	Rating factor 55 °C	Height (in.)	Width (in.)	Length (in.)	Weight (lbs.)
2.50	4.0	3.0	7.12	5.25	11.88	14.3
2.50	4.0	3.0	7.12	5.25	11.88	14.3
3.06	4.0	3.0	7.12	5.25	11.88	12.5
3.06	3.0	2.2	7.12	5.25	11.88	12.5
3.06	2.0	1.5	7.12	5.25	11.88	12.5
3.06	2.0	1.5	7.12	5.25	11.88	12.3
3.06	2.0	1.5	7.12	5.25	11.88	12.3
3.06	1.5	1.2	7.12	5.25	11.88	12.3
2.50	4.0/2.0	3.0/1.5	7.12	5.25	11.88	14.4
3.06	3.0/2.0	2.2/1.5	7.12	5.25	11.88	13.7
3.06	2.0/2.0	1.5/1.5	7.12	5.25	11.88	12.7

2.50	4.0	3.0	7.91	5.25	11.88	14.3
2.50	4.0	3.0	7.91	5.25	11.88	14.3
3.06	4.0	3.0	7.91	5.25	11.88	12.5
3.06	3.0	2.2	7.91	5.25	11.88	12.5
3.06	2.0	1.5	7.91	5.25	11.88	12.5
3.06	2.0	1.5	7.91	5.25	11.88	12.3
3.06	2.0	1.5	7.91	5.25	11.88	12.3
3.06	1.5	1.2	7.91	5.25	11.88	12.3
2.50	4.0/2.0	3.0/1.5	7.91	5.25	11.88	14.4
3.06	3.0/2.0	2.2/1.5	7.91	5.25	11.88	13.7
3.06	2.0/2.0	1.5/1.5	7.91	5.25	11.88	12.7

CMV-S and CMV

600 volts
Indoor/outdoor
10 kV BIL

The CMV-S is part of ABB's AccuRange® current transformer portfolio of products with 0.15% accuracy from 1% of nominal current through rating factor.

	Primary amps	Style number	IEEE metering accuracy
CMV-S	500	923A498G04	0.15SB-0.2
	500	923A498G05	0.15SB-0.2
	600	923A498G01	0.15SB-0.2
	800	923A498G06	0.15SB-0.5
	1000	923A498G02	0.15SB-0.5
	2000	923A498G03	0.15SB-0.5

	Primary amps	Style number	IEEE metering accuracy				
			B-0.1	B-0.2	B-0.5	B-0.9	B-1.8
CMV	100	7524A75G17	1.2	—	—	—	—
	200	7524A75G01	0.3	—	—	—	—
	300	7524A75G02	0.3	0.3	—	—	—
	400	7524A75G03	0.3	0.3	—	—	—
	500	7524A75G12	0.3	0.3	0.3	—	—
	600	7524A75G04	0.3	0.3	0.3	—	—
	800	7524A75G05	0.3	0.3	0.3	—	—
	1000	7524A75G06	0.3	0.3	0.3	—	—
	1200	7524A75G07	0.3	0.3	0.3	0.3	—
	1500	7524A75G08	0.3	0.3	0.3	0.3	—
	2000	7524A75G09	0.3	0.3	0.3	0.3	0.3
	3000	7524A75G10	0.3	0.3	0.3	0.3	0.3
	4000	7524A75G11	0.3	0.3	0.3	0.3	0.3

Tapered bottom

	100	7524A73G17	1.2	—	—	—	—
	200	7524A73G01	0.3	—	—	—	—
	300	7524A73G02	0.3	0.3	—	—	—
	400	7524A73G03	0.3	0.3	—	—	—
	500	7524A73G12	0.3	0.3	0.3	—	—
	600	7524A73G04	0.3	0.3	0.3	—	—
	800	7524A73G05	0.3	0.3	0.3	—	—
	1000	7524A73G06	0.3	0.3	0.3	—	—
	1200	7524A73G07	0.3	0.3	0.3	0.3	—
	1500	7524A73G08	0.3	0.3	0.3	0.3	—
	2000	7524A73G09	0.3	0.3	0.3	0.3	0.3
	3000	7524A73G10	0.3	0.3	0.3	0.3	0.3
	4000	7524A73G11	0.3	0.3	0.3	0.3	0.3

Wide bottom

Product bulletins:
CMV-S: 1VAP428202-DB
CMV: 1VAP428201-DB

Optional accessory for tapered bottom styles:
Bus bar adapter (shown at right): 9628A05G17
(Supplied with style 7524A75GXX and 923A231GXX;
to order without, use style 7524A76GXX)

Bus bar adapter fits the following bus bar sizes:

¼", ⅜" and ½" (with modification)

Optional accessories for wide bottom styles:

Mounting feet (kit of 4)	9628A05G15
One-piece base	9628A05G16

Window diam. (in.)	Rating factor at 85 °C	Height (in.)	Width (in.)	Length (in.)	Weight (lbs.)
3.5 x 4.5	2.0	9.17	6.00	2.19	6.0
3.5 x 4.5	4.0	9.17	6.00	2.19	6.0
3.5 x 4.5	2.0	9.17	6.00	2.19	6.0
3.5 x 4.5	3.0	9.17	6.00	2.19	6.0
3.5 x 4.5	2.0	9.17	6.00	2.19	6.0
3.5 x 4.5	2.0	9.17	6.00	2.19	6.0

Window diam. (in.)	Rating factor 30 °C	Rating factor 55 °C	Height (in.)	Width (in.)	Length (in.)	Weight (lbs.)
3.5 x 4.5	4.0	3.0	9.17	6.00	2.19	6.0
3.5 x 4.5	4.0	3.0	9.17	6.00	2.19	6.0
3.5 x 4.5	4.0	3.0	9.17	6.00	2.19	6.0
3.5 x 4.5	4.0	3.0	9.17	6.00	2.19	6.0
3.5 x 4.5	3.0	2.2	9.17	6.00	2.19	6.0
3.5 x 4.5	3.0	2.2	9.17	6.00	2.19	6.0
3.5 x 4.5	3.0	2.2	9.17	6.00	2.19	6.0
3.5 x 4.5	2.0	1.5	9.17	6.00	2.19	6.0
3.5 x 4.5	2.0	1.5	9.17	6.00	2.19	6.0
3.5 x 4.5	2.0	1.5	9.17	6.00	2.19	6.0
3.5 x 4.5	1.5	1.2	9.17	6.00	2.19	6.0
3.5 x 4.5	1.33	1.0	9.17	6.00	2.19	6.0
3.5 x 4.5	1.0	0.75	9.17	6.00	2.19	6.0
3.5 x 4.5	4.0	3.0	8.75	6.00	2.19	6.5
3.5 x 4.5	4.0	3.0	8.75	6.00	2.19	6.5
3.5 x 4.5	4.0	3.0	8.75	6.00	2.19	6.5
3.5 x 4.5	4.0	3.0	8.75	6.00	2.19	6.5
3.5 x 4.5	3.0	2.2	8.75	6.00	2.19	6.5
3.5 x 4.5	3.0	2.2	8.75	6.00	2.19	6.5
3.5 x 4.5	3.0	2.2	8.75	6.00	2.19	6.5
3.5 x 4.5	2.0	1.5	8.75	6.00	2.19	6.5
3.5 x 4.5	2.0	1.5	8.75	6.00	2.19	6.5
3.5 x 4.5	2.0	1.5	8.75	6.00	2.19	6.5
3.5 x 4.5	1.5	1.2	8.75	6.00	2.19	6.5
3.5 x 4.5	1.33	1.0	8.75	6.00	2.19	6.5
3.5 x 4.5	1.0	0.75	8.75	6.00	2.19	6.5

CMV Hi-Temp

600 volts
Indoor/outdoor
10 kV BIL

This CT is designed for high temperature environments. Refer to product bulletin for details.

Tapered bottom

Primary amps	Style number	IEEE metering accuracy B-0.1	B-0.2	B-0.5	B-0.9	B-1.8
200	923A231G01	0.3	—	—	—	—
300	923A231G02	0.3	0.3	—	—	—
400	923A231G03	0.3	0.3	—	—	—
600	923A231G04	0.3	0.3	0.3	—	—
800	923A231G05	0.3	0.3	0.3	—	—
1000	923A231G06	0.3	0.3	0.3	—	—
1200	923A231G07	0.3	0.3	0.3	0.3	—
1500	923A231G08	0.3	0.3	0.3	0.3	—
2000	923A231G09	0.3	0.3	0.3	0.3	0.3
3000	923A231G10	0.3	0.3	0.3	0.3	0.3
4000	923A231G11	0.3	0.3	0.3	0.3	0.3

Optional accessory for tapered bottom styles:
Bus bar adapter (shown at right): 9628A05G17
(Supplied with style 7524A75GXX and 923A231GXX;
to order without, use style 7524A76GXX)

Bus bar adapter fits the following bus bar sizes:
¼", ⅜" and ½" (with modification)

Window diam. (in.)	Rating factor @ 85 °C	Height (in.)	Width (in.)	Length (in.)	Weight (lbs.)
3.5 x 4.5	4.0	9.17	6.00	2.19	6.0
3.5 x 4.5	4.0	9.17	6.00	2.19	6.0
3.5 x 4.5	4.0	9.17	6.00	2.19	6.0
3.5 x 4.5	3.0	9.17	6.00	2.19	6.0
3.5 x 4.5	3.0	9.17	6.00	2.19	6.0
3.5 x 4.5	2.0	9.17	6.00	2.19	6.0
3.5 x 4.5	2.0	9.17	6.00	2.19	6.0
3.5 x 4.5	2.0	9.17	6.00	2.19	6.0
3.5 x 4.5	1.5	9.17	6.00	2.19	6.0
3.5 x 4.5	1.33	9.17	6.00	2.19	6.0
3.5 x 4.5	1.0	9.17	6.00	2.19	6.0

CLC-S and CLC

600 volts
Indoor/outdoor
10 kV BIL

The CLC-S is part of ABB's AccuRange® current transformer portfolio of products with 0.15% accuracy from 1% of nominal current through rating factor.

	Primary amps	Style number	IEEE metering accuracy
CLC-S	600	923A533G03	0.15S B-0.9
	1500	923A533G02	0.15S B-0.9
	2000	923A533G01	0.15S B-0.9

	Primary amps	Style number	IEEE metering accuracy B-0.1	B-0.2	B-0.5	B-0.9	B-1.8
CLC	400	7524A58G21	0.3	0.3	—	—	—
UL Recognized component	500	7524A58G19	0.3	0.3	0.3	—	—
	600	7524A58G16	0.3	0.3	0.3	—	—
	800	7524A58G01	0.3	0.3	0.3	—	—
	1000	7524A58G02	0.3	0.3	0.3	—	—
	1200	7524A58G03	0.3	0.3	0.3	0.3	—
	1500	7524A58G04	0.3	0.3	0.3	0.3	—
	2000	7524A58G05	0.3	0.3	0.3	0.3	0.3
	3000	7524A58G06	0.3	0.3	0.3	0.3	0.3
	4000	7524A58G07	0.3	0.3	0.3	0.3	0.3
	600/1200	7524A58G08	0.3	0.3	—	—	—
			0.3	0.3	0.3	0.3	—
	800/1600	7524A58G09	0.3	0.3	—	—	—
			0.3	0.3	0.3	0.3	0.3
	1000/2000	7524A58G10	0.3	0.3	0.3	—	—
			0.3	0.3	0.3	0.3	0.3
	1500/3000	7524A58G11	0.3	0.3	0.3	0.3	—
			0.3	0.3	0.3	0.3	0.3
Without hardware	2000/4000	7524A58G12	0.3	0.3	0.3	0.3	0.3
			0.3	0.3	0.3	0.3	0.3

Optional accessories:

Mounting feet, set of four with hardware	9628A05G20
One-piece base	9628A05G21
Window plate (one required)	9628A05G22

Primary bar assemblies:

1950 amps max (with RF)	1 bar	9628A05G23
3200 amps max (with RF)	2 bars	9628A05G24
4200 amps max (with RF)	3 bars	9628A05G25
5100 amps max (with RF)	4 bars	9628A05G26

Window diam. (in.)	Rating factor 30 °C	Rating factor 55 °C	Height (in.)	Width (in.)	Length (in.)	Weight (lbs.)
5.50	2.0	1.5	9.75	8.25	2.63	11.0
5.50	3.0	2.5	9.75	8.25	2.63	11.0
5.50	2.5	1.75	9.75	8.25	2.63	11.0

Window diam. (in.)	Rating factor 30 °C	Rating factor 55 °C	Height (in.)	Width (in.)	Length (in.)	Weight (lbs.)
5.50	3.0	2.2	9.75	8.25	2.63	11.0
5.50	4.0	3.0	9.75	8.25	2.63	11.0
5.50	3.0	2.2	9.75	8.25	2.63	11.0
5.50	2.0	1.5	9.75	8.25	2.63	11.0
5.50	2.0	1.5	9.75	8.25	2.63	11.0
5.50	2.0	1.5	9.75	8.25	2.63	11.0
5.50	3.0	2.2	9.75	8.25	2.63	11.0
5.50	2.0	1.5	9.75	8.25	2.63	11.0
5.50	1.5	1.2	9.75	8.25	2.63	11.0
5.50	1.33	1.0	9.75	8.25	2.63	11.0
5.50	3.0	2.2	9.75	8.25	2.63	11.0
	2.0	1.5				
5.50	3.0	2.2	9.75	8.25	2.63	11.0
	2.0	1.5				
5.50	3.0	2.2	9.75	8.25	2.63	11.0
	2.0	1.5				
5.50	2.0	1.5	9.75	8.25	2.63	11.0
	1.5	1.2				
5.50	2.0	1.5	9.75	8.25	2.63	11.0
	1.33	1.0				

CLC

600 volts
Indoor/outdoor
10 kV BIL

UL Recognized component

Primary amps	Style number	IEEE metering accuracy B-0.1	B-0.2	B-0.5	B-0.9	B-1.8
600	7524A59G16	0.3	0.3	0.3	—	—
800	7524A59G01	0.3	0.3	0.3	—	—
1000	7524A59G02	0.3	0.3	0.3	—	—
1200	7524A59G03	0.3	0.3	0.3	0.3	—
1500	7524A59G04	0.3	0.3	0.3	0.3	—
2000	7524A59G05	0.3	0.3	0.3	0.3	0.3
3000	7524A59G06	0.3	0.3	0.3	0.3	0.3
4000	7524A59G07	0.3	0.3	0.3	0.3	0.3
600/ 1200	7524A59G08	0.3	0.3	—	—	—
		0.3	0.3	0.3	0.3	—
800/ 1600	7524A59G09	0.3	0.3	—	—	—
		0.3	0.3	0.3	0.3	0.3
1000/ 2000	7524A59G10	0.3	0.3	0.3	—	—
		0.3	0.3	0.3	0.3	0.3
1500/ 3000	7524A59G11	0.3	0.3	0.3	0.3	—
		0.3	0.3	0.3	0.3	0.3
2000/ 4000	7524A59G12	0.3	0.3	0.3	0.3	0.3
		0.3	0.3	0.3	0.3	0.3

With mounting feet (4 pieces)

Optional accessories:

Mounting feet, set of four with hardware		9628A05G20
One-piece base		9628A05G21
Window plate (one required)		9628A05G22

Primary bar assemblies:

1950 amps max (with RF)	1 bar	9628A05G23
3200 amps max (with RF)	2 bars	9628A05G24
4200 amps max (with RF)	3 bars	9628A05G25
5100 amps max (with RF)	4 bars	9628A05G26

Window diam. (in.)	Rating factor 30 °C	Rating factor 55 °C	Height (in.)	Width (in.)	Length (in.)	Weight (lbs.)
5.50	3.0	2.2	9.88	8.25	6.37	11.5
5.50	2.0	1.5	9.88	8.25	6.37	11.5
5.50	2.0	1.5	9.88	8.25	6.37	11.5
5.50	2.0	1.5	9.88	8.25	6.37	11.5
5.50	3.0	2.2	9.88	8.25	6.37	11.5
5.50	2.0	1.5	9.88	8.25	6.37	11.5
5.50	1.5	1.2	9.88	8.25	6.37	11.5
5.50	1.33	1.0	9.88	8.25	6.37	11.5
5.50	3.0	2.2	9.88	8.25	6.37	11.5
	2.0	1.5				
5.50	3.0	2.2	9.88	8.25	6.37	11.5
	2.0	1.5				
5.50	3.0	2.2	9.88	8.25	6.37	11.5
	2.0	1.5				
5.50	2.0	1.5	9.88	8.25	6.37	11.5
	1.5	1.2				
5.50	2.0	1.5	9.88	8.25	6.37	11.5
	1.33	1.0				

CLC

600 volts
Indoor/outdoor
10 kV BIL

UL Recognized component

Primary amps	Style number	IEEE metering accuracy B-0.1	B-0.2	B-0.5	B-0.9	B-1.8
400	7524A60G18	0.3	0.3	—	—	—
500	7524A60G19	0.3	0.3	0.3	—	—
600	7524A60G16	0.3	0.3	0.3	—	—
800	7524A60G01	0.3	0.3	0.3	—	—
1000	7524A60G02	0.3	0.3	0.3	—	—
1200	7524A60G03	0.3	0.3	0.3	0.3	—
1500	7524A60G04	0.3	0.3	0.3	0.3	—
2000	7524A60G05	0.3	0.3	0.3	0.3	0.3
3000	7524A60G06	0.3	0.3	0.3	0.3	0.3
4000	7524A60G07	0.3	0.3	0.3	0.3	0.3
600/1200	7524A60G08	0.3	0.3	—	—	—
		0.3	0.3	0.3	0.3	—
800/1600	7524A60G09	0.3	0.3	—	—	—
		0.3	0.3	0.3	0.3	0.3
1000/2000	7524A60G10	0.3	0.3	0.3	—	—
		0.3	0.3	0.3	0.3	0.3
1500/3000	7524A60G11	0.3	0.3	0.3	0.3	—
		0.3	0.3	0.3	0.3	0.3
2000/4000	7524A60G12	0.3	0.3	0.3	0.3	0.3
		0.3	0.3	0.3	0.3	0.3

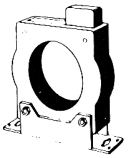

With one-piece base

Optional accessories:

Mounting feet, set of four with hardware	9628A05G20
One-piece base	9628A05G21
Window plate (one required)	9628A05G22

Primary bar assemblies:

1950 amps max (with RF)	1 bar	9628A05G23
3200 amps max (with RF)	2 bars	9628A05G24
4200 amps max (with RF)	3 bars	9628A05G25
5100 amps max (with RF)	4 bars	9628A05G26

Window diam. (in.)	Rating factor 30 °C	Rating factor 55 °C	Height (in.)	Width (in.)	Length (in.)	Weight (lbs.)
5.50	3.0	2.2	9.88	10.50	2.62	11.0
5.50	4.0	3.0	9.88	10.50	2.62	11.0
5.50	3.0	2.2	9.88	10.50	2.62	11.0
5.50	2.0	1.5	9.88	10.50	2.62	11.0
5.50	2.0	1.5	9.88	10.50	2.62	11.0
5.50	2.0	1.5	9.88	10.50	2.62	11.0
5.50	3.0	2.2	9.88	10.50	2.62	11.0
5.50	2.0	1.5	9.88	10.50	2.62	11.0
5.50	1.5	1.2	9.88	10.50	2.62	11.0
5.50	1.33	1.0	9.88	10.50	2.62	11.0
5.50	3.0	2.2	9.88	10.50	2.62	11.0
	2.0	1.5				
5.50	3.0	2.2	9.88	10.50	2.62	11.0
	2.0	1.5				
5.50	3.0	2.2	9.88	10.50	2.62	11.0
	2.0	1.5				
5.50	2.0	1.5	9.88	10.50	2.62	11.0
	1.5	1.2				
5.50	2.0	1.5	9.88	10.50	2.62	11.0
	1.33	1.0				

CLC

600 volts
Indoor/outdoor
10 kV BIL

UL Recognized component

	Primary amps	Style number	IEEE metering accuracy B-0.1	B-0.2	B-0.5	B-0.9	B-1.8
	400	7524A61G18	0.3	0.3	—	—	—
	600	7524A61G16	0.3	0.3	0.3	—	—
	800	7524A61G01	0.3	0.3	0.3	—	—
	1000	7524A61G02	0.3	0.3	0.3	—	—
	1200	7524A61G03	0.3	0.3	0.3	0.3	—
	1500	7524A61G04	0.3	0.3	0.3	0.3	—
	2000	7524A61G05	0.3	0.3	0.3	0.3	0.3
	3000	7524A61G06	0.3	0.3	0.3	0.3	0.3
	4000	7524A61G07	0.3	0.3	0.3	0.3	0.3
	600/ 1200	7524A61G08	0.3	0.3	—	—	—
			0.3	0.3	0.3	0.3	—
	800/ 1600	7524A61G09	0.3	0.3	—	—	—
			0.3	0.3	0.3	0.3	0.3
	1000/ 2000	7524A61G10	0.3	0.3	0.3	—	—
			0.3	0.3	0.3	0.3	0.3
	1500/ 3000	7524A61G11	0.3	0.3	0.3	0.3	—
			0.3	0.3	0.3	0.3	0.3
With window plate	2000/ 4000	7524A61G12	0.3	0.3	0.3	0.3	0.3
			0.3	0.3	0.3	0.3	0.3

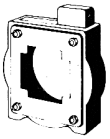

Optional accessories:

Mounting feet, set of four with hardware	9628A05G20
One-piece base	9628A05G21
Window plate (one required)	9628A05G22

Primary bar assemblies:

1950 amps max (with RF)	1 bar	9628A05G23
3200 amps max (with RF)	2 bars	9628A05G24
4200 amps max (with RF)	3 bars	9628A05G25
5100 amps max (with RF)	4 bars	9628A05G26

Window diam. (in.)	Rating factor 30 °C	Rating factor 55 °C	Height (in.)	Width (in.)	Length (in.)	Weight (lbs.)
5.50	3.0	2.2	9.75	8.25	2.88	11.5
5.50	3.0	2.2	9.75	8.25	2.88	11.5
5.50	2.0	1.5	9.75	8.25	2.88	11.5
5.50	2.0	1.5	9.75	8.25	2.88	11.5
5.50	2.0	1.5	9.75	8.25	2.88	11.5
5.50	3.0	2.2	9.75	8.25	2.88	11.5
5.50	2.0	1.5	9.75	8.25	2.88	11.5
5.50	1.5	1.2	9.75	8.25	2.88	11.5
5.50	1.33	1.0	9.75	8.25	2.88	11.5
5.50	3.0	2.2	9.75	8.25	2.88	11.5
	2.0	1.5				
5.50	3.0	2.2	9.75	8.25	2.88	11.5
	2.0	1.5				
5.50	3.0	2.2	9.75	8.25	2.88	11.5
	2.0	1.5				
5.50	2.0	1.5	9.75	8.25	2.88	11.5
	1.5	1.2				
5.50	2.0	1.5	9.75	8.25	2.88	11.5
	1.33	1.0				

CLC

600 volts
Indoor/outdoor
10 kV BIL
With primary bar

UL Recognized component

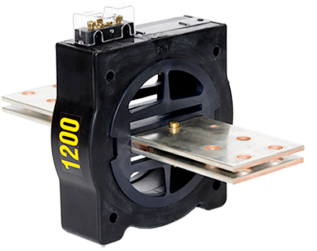

Primary amps	Style number	IEEE metering accuracy B-0.1	B-0.2	B-0.5	B-0.9	B-1.8
600	7526A85G16	0.3	0.3	0.3	—	—
800	7526A85G01	0.3	0.3	0.3	—	—
1000	7526A85G02	0.3	0.3	0.3	—	—
1200	7526A85G03	0.3	0.3	0.3	0.3	—
1200	7526A85G17	0.3	0.3	0.3	0.3	0.3
1500	7526A85G04	0.3	0.3	0.3	0.3	—
2000	7526A85G05	0.3	0.3	0.3	0.3	0.3
3000	7526A85G06	0.3	0.3	0.3	0.3	0.3
4000	7526A85G07	0.3	0.3	0.3	0.3	0.3
600/1200	7526A85G08	0.3	0.3	0.3	0.3	—
		0.3	0.3	—	—	—
800/1600	7526A85G09	0.3	0.3	0.3	0.3	0.3
		0.3	0.3	—	—	—
1000/2000	7526A85G10	0.3	0.3	0.3	0.3	0.3
		0.3	0.3	0.3	—	—
1500/3000	7526A85G11	0.3	0.3	0.3	0.3	0.3
		0.3	0.3	0.3	0.3	—
2000/4000	7526A85G12	0.3	0.3	0.3	0.3	0.3
		0.3	0.3	0.3	0.3	0.3

Primary bar assemblies:

1950 amps max (with RF)	1 bar	9628A05G23
3200 amps max (with RF)	2 bars	9628A05G24
4200 amps max (with RF)	3 bars	9628A05G25
5100 amps max (with RF)	4 bars	9628A05G26

Bar assemblies

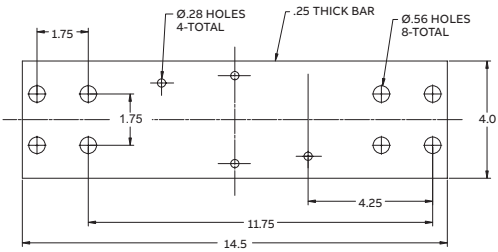

Bars are 0.250" thick by 4" wide. With multi-bar assemblies, there is 0.250" spacing between bars. Assembly can be mounted with bars horizontal or vertical.

Number of bars	Rating factor 30 °C	Rating factor 55 °C	Height (in.)	Width (in.)	Length (in.)	Weight (lbs.)
1	3.0	2.2	9.75	8.25	2.62	15
1	2.0	1.5	9.75	8.25	2.62	15
1	2.0	1.5	9.75	8.25	2.62	15
2	2.0	1.5	9.75	8.25	2.62	15
2	2.0	1.5	9.75	8.25	2.62	15
4	3.0	2.2	9.75	8.25	2.62	15
3	2.0	1.5	9.75	8.25	2.62	15
4	1.5	1.2	9.75	8.25	2.62	15
4	1.25	1.0	9.75	8.25	2.62	15
2	3.0/2.0	2.2/1.5	9.75	8.25	2.62	15
2	3.0/2.0	2.2/1.5	9.75	8.25	2.62	15
3	3.0/2.0	2.2/1.5	9.75	8.25	2.62	15
4	2.0/1.5	1.5/1.2	9.75	8.25	2.62	15
4	2.0/1.25	1.5/0.9	9.75	8.25	2.62	15

DEH-705

600 volts
Indoor/outdoor
10 kV BIL
60 Hertz

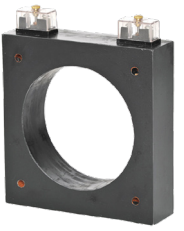

Primary amps	Style number	Accuracy/burden Metering	Relaying
200	A0302S08-570	0.6B-0.1	C5
300	A0303S08-570	0.3B-0.1	C10
400	A0304S08-570	0.3B-0.2	C15
500	A0305S08-570	0.3B-0.5	C20
600	A0306S08-570	0.3B-0.5	C25
800	A0308S08-570	0.3B-0.9	C30
1000	A0310S08-570	0.3B-0.9	C30
1200	A0312S08-570	0.3B-0.9	C40
1500	A0315S08-570	0.3B-1.8	C30
2000	A0320S08-570	0.3B-1.8	C40
2500	A0325S08-570	0.3B-1.8	C30
3000	A0330S08-570	0.3B-1.8	C40
4000	A0340S08-570	0.3B-1.8	C50

Available in dual ratio designs

One second thermal/mechanical ratings:
65 x full winding I_{nom} / unlimited mechanical

Units available with mounting feet. Change “08” of style number to “18”.

Mounting feet detail:

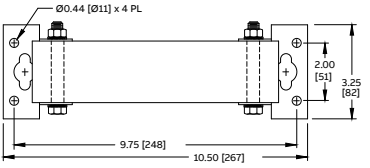

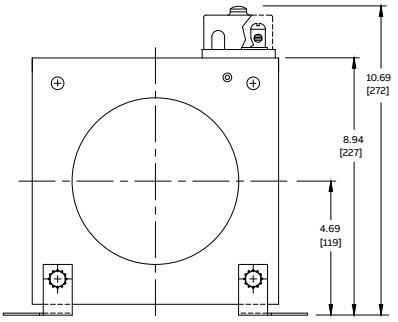

Window diam. (in.)	Rating factor @ 30 °C	Height (in.)	Width (in.)	Length (in.)	Weight (lbs.)
5.75	2.0	10.25	8.50	2.12	14–15
5.75	2.0	10.25	8.50	2.12	14–15
5.75	2.0	10.25	8.50	2.12	14–15
5.75	2.0	10.25	8.50	2.12	14–15
5.75	2.0	10.25	8.50	2.12	14–15
5.75	2.0	10.25	8.50	2.12	14–15
5.75	2.0	10.25	8.50	2.12	14–15
5.75	2.0	10.25	8.50	2.12	14–15
5.75	2.0	10.25	8.50	2.12	14–15
5.75	2.0	10.25	8.50	2.12	14–15
5.75	1.5	10.25	8.50	2.12	14–15
5.75	1.5	10.25	8.50	2.12	14–15
5.75	1.0	10.25	8.50	2.12	14–15

CLE

600 volts
Indoor/outdoor
10 kV BIL

UL Recognized component

	Primary amps	Style number	IEEE metering accuracy B-0.1	B-0.2	B-0.5	B-0.9	B-1.8
Without mounting feet	2000	7524A63G01	0.3	0.3	0.3	0.3	—
	3000	7524A63G02	0.3	0.3	0.3	0.3	0.3
	4000	7524A63G03	0.3	0.3	0.3	0.3	0.3
	5000	7524A63G04	0.3	0.3	0.3	0.3	0.3
	6000	7524A63G05	0.3	0.3	0.3	0.3	0.3
	1000/ 2000	7524A63G06	0.3	0.3	0.3	—	—
			0.3	0.3	0.3	0.3	—
	1500/ 3000	7524A63G07	0.3	0.3	0.3	—	—
			0.3	0.3	0.3	0.3	0.3
	2000/ 4000	7524A63G08	0.3	0.3	0.3	0.3	—
			0.3	0.3	0.3	0.3	0.3
	2500/ 5000	7524A63G09	0.3	0.3	0.3	0.3	0.3
			0.3	0.3	0.3	0.3	0.3
	3000/ 6000	7524A63G10	0.3	0.3	0.3	0.3	0.3
			0.3	0.3	0.3	0.3	0.3

With mounting feet (2 pieces)	2000	7524A64G01	0.3	0.3	0.3	0.3	—
	3000	7524A64G02	0.3	0.3	0.3	0.3	0.3
	4000	7524A64G03	0.3	0.3	0.3	0.3	0.3
	5000	7524A64G04	0.3	0.3	0.3	0.3	0.3
	6000	7524A64G05	0.3	0.3	0.3	0.3	0.3
	1000/ 2000	7524A64G06	0.3	0.3	0.3	—	—
			0.3	0.3	0.3	0.3	—
	1500/ 3000	7524A64G07	0.3	0.3	0.3	—	—
			0.3	0.3	0.3	0.3	0.3
	2000/ 4000	7524A64G08	0.3	0.3	0.3	0.3	—
			0.3	0.3	0.3	0.3	0.3
	2500/ 5000	7524A64G09	0.3	0.3	0.3	0.3	0.3
			0.3	0.3	0.3	0.3	0.3
	3000/ 6000	7524A64G10	0.3	0.3	0.3	0.3	0.3
			0.3	0.3	0.3	0.3	0.3

Styles with relaying accuracy also available.

Optional accessories:

Mounting feet (set of 2 with hardware)	9628A05G27
Window plates (set of 2 with hardware)	9628A05G28

Window diam. (in.)	Rating factor 30 °C	Rating factor 55 °C	Height (in.)	Width (in.)	Length (in.)	Weight (lbs.)
8.25	2.0	1.5	12.88	11.38	2.63	16.0
8.25	2.0	1.5	12.88	11.38	2.63	16.0
8.25	1.5	1.2	12.88	11.38	2.63	16.0
8.25	1.33	1.0	12.88	11.38	2.63	16.0
8.25	1.0	0.75	12.88	11.38	2.63	16.0
8.25	3.0	2.2	12.88	11.38	2.63	16.0
	2.0	1.5				
8.25	3.0	2.2	12.88	11.38	2.63	16.0
	2.0	1.5				
8.25	2.0	1.5	12.88	11.38	2.63	16.0
	1.5	1.2				
8.25	2.0	1.5	12.88	11.38	2.63	16.0
	1.33	1.0				
8.25	1.33	1.0	12.88	11.38	2.63	16.0
	1.0	0.75				
8.25	2.0	1.5	12.88	11.38	6.37	17.0
8.25	2.0	1.5	12.88	11.38	6.37	17.0
8.25	1.5	1.2	12.88	11.38	6.37	17.0
8.25	1.33	1.0	12.88	11.38	6.37	17.0
8.25	1.0	0.75	12.88	11.38	6.37	17.0
8.25	3.0	2.2	12.88	11.38	6.37	17.0
	2.0	1.5				
8.25	3.0	2.2	12.88	11.38	6.37	17.0
	2.0	1.5				
8.25	2.0	1.5	12.88	11.38	6.37	17.0
	1.5	1.2				
8.25	2.0	1.5	12.88	11.38	6.37	17.0
	1.33	1.0				
8.25	1.33	1.0	12.88	11.38	6.37	17.0
	1.0	0.75				

CEH-636

600 volts
Indoor/outdoor
10 kV BIL
60 Hertz

One second thermal/mechanical ratings:
60 x full winding I_{nom} / unlimited mechanical

Primary amps	Style number	Accuracy/burden Metering	Accuracy/burden Relaying
100	A0101S08-570	±10% - 1 VA	—
200	A0102S08-570	1.2B-0.1	—
300	A0103S08-570	0.6B-0.1	C5
400	A0104S08-570	0.3B-0.1	C10
500	A0105S08-570	0.3B-0.2	C15
600	A0106S08-570	0.3B-0.2	C15
800	A0108S08-570	0.3B-0.5	C20
1000	A0110S08-570	0.3B-0.5	C30
1200	A0112S08-570	0.3B-0.9	C40
1500	A0115S08-570	0.3B-0.9	C50
1600	A0116S08-570	0.3B-0.9	C50
2000	A0120S08-570	0.3B-1.8	C35
2500	A0125S08-570	0.3B-1.8	C40
3000	A0130S08-570	0.3B-1.8	C50
4000	A0140S08-570	0.3B-1.8	C50
5000	A0150S08-570	0.3B-1.8	—
6000	A0160S08-570	0.3B-1.8	—

Available in dual ratio designs

Units available with mounting feet. Change “08” of style number to “18”.

Mounting feet detail:

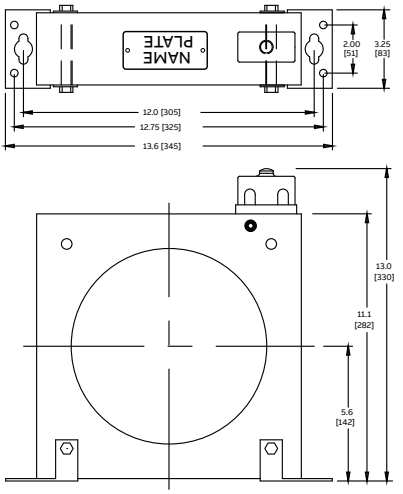

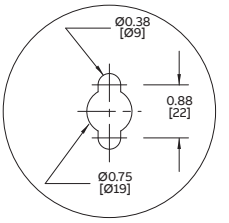

Window diam. (in.)	Rating factor @ 30 °C	Height (in.)	Width (in.)	Length (in.)	Weight (lbs.)
8.13	2.0	13.0	11.0	3.0	18–20
8.13	2.0	13.0	11.0	3.0	18–20
8.13	2.0	13.0	11.0	3.0	18–20
8.13	2.0	13.0	11.0	3.0	18–20
8.13	2.0	13.0	11.0	3.0	18–20
8.13	2.0	13.0	11.0	3.0	18–20
8.13	2.0	13.0	11.0	3.0	18–20
8.13	2.0	13.0	11.0	3.0	18–20
8.13	2.0	13.0	11.0	3.0	18–20
8.13	2.0	13.0	11.0	3.0	18–20
8.13	2.0	13.0	11.0	3.0	18–20
8.13	2.0	13.0	11.0	3.0	18–20
8.13	1.5	13.0	11.0	3.0	18–20
8.13	1.33	13.0	11.0	3.0	18–20
8.13	1.0	13.0	11.0	3.0	18–20
8.13	1.0	13.0	11.0	3.0	18–20
8.13	1.0	13.0	11.0	3.0	18–20

RLC

600 volts
Indoor/outdoor
10 kV BIL

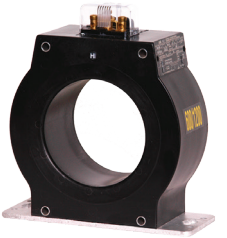

UL Recognized component

Contact your ABB representative for styles with primary bar.

	Primary amps	Style number	IEEE metering accuracy B-0.1	B-0.2	B-0.5	B-0.9	B-1.8
RLC	500	7524A52G23	0.3	0.3	0.3	—	—
	600	7524A52G17	0.3	0.3	0.3	—	—
	750	7524A52G01	0.3	0.3	0.3	—	—
	800	7524A52G02	0.3	0.3	0.3	0.3	—
	900	7524A52G03	0.3	0.3	0.3	0.3	—
	1000	7524A52G04	0.3	0.3	0.3	0.3	—
	1200	7524A52G05	0.3	0.3	0.3	0.3	0.3
	1500	7524A52G06	0.3	0.3	0.3	0.3	0.3
	2000	7524A52G07	0.3	0.3	0.3	0.3	0.3
	3000	7524A52G08	0.3	0.3	0.3	0.3	0.3
	4000	7524A52G09	0.3	0.3	0.3	0.3	0.3
	600/1200	7524A52G10	0.3	0.3	0.3	—	—
			0.3	0.3	0.3	0.3	0.3
	800/1600	7524A52G11	0.3	0.3	0.3	—	—
			0.3	0.3	0.3	0.3	0.3
	1000/2000	7524A52G12	0.3	0.3	0.3	0.3	—
			0.3	0.3	0.3	0.3	0.3
	1500/3000	7524A52G13	0.3	0.3	0.3	0.3	0.3
			0.3	0.3	0.3	0.3	0.3
	2000/4000	7524A52G14	0.3	0.3	0.3	0.3	0.3
			0.3	0.3	0.3	0.3	0.3

RLC high accuracy	300	9625A21G10	0.3	—	—	—	—
	800	9625A21G11	—	—	—	—	—
	1000	9625A21G01	0.3	0.3	0.3	0.3	0.3
	2000	9625A21G02	0.3	0.3	0.3	0.3	0.3
	3000	9625A21G03	0.3	0.3	0.3	0.3	0.3
	4000	9625A21G04	0.3	0.3	0.3	0.3	0.3
	1000/2000	9625A21G05	0.3	0.3	0.3	0.3	—
			0.3	0.3	0.3	0.3	0.3
	1500/3000	9625A21G06	0.3	0.3	0.3	0.3	0.3
			0.3	0.3	0.3	0.3	0.3
	2000/4000	9625A21G07	0.3	0.3	0.3	0.3	0.3
			0.3	0.3	0.3	0.3	0.3

Dimensions (in.)

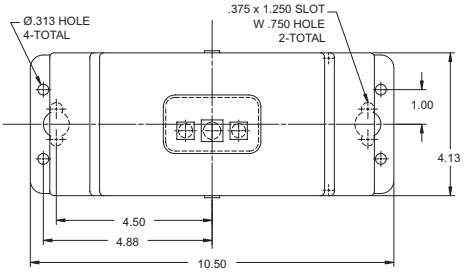

Window diam. (in.)	Relaying accuracy	Rating factor 30 °C	Rating factor 55 °C	Height (in.)	Width (in.)	Length (in.)	Weight (lbs.)
5.5	C50	2.0	1.5	11.25	10.50	4.12	21.0
5.5	C100	2.0	1.5	11.25	10.50	4.12	21.0
5.5	C100	2.0	1.5	11.25	10.50	4.12	21.0
5.5	C100	2.0	1.5	11.25	10.50	4.12	21.0
5.5	C100	2.0	1.5	11.25	10.50	4.12	21.0
5.5	C100	2.0	1.5	11.25	10.50	4.12	21.0
5.5	C200	2.0	1.5	11.25	10.50	4.12	21.0
5.5	C200	2.0	1.5	11.25	10.50	4.12	21.0
5.5	C200	1.5	1.2	11.25	10.50	4.12	21.0
5.5	C200	1.33	1.0	11.25	10.50	4.12	21.0
5.5	C200	1.33	1.0	11.25	10.50	4.12	21.0
5.5	C100	2.0	1.5	11.25	10.50	4.12	21.0
	C200	2.0	1.5				
5.5	C100	2.0	1.5	11.25	10.50	4.12	21.0
	C200	1.5	1.2				
5.5	C100	2.0	1.5	11.25	10.50	4.12	21.0
	C200	1.5	1.2				
5.5	C100	1.5	1.2	11.25	10.50	4.12	21.0
	C200	1.33	1.0				
5.5	C100	1.5	1.2	11.25	10.50	4.12	21.0
	C200	1.33	1.0				

5.5	C90	2.0	1.5	11.25	10.50	4.12	29.0
5.5	C200	2.0	1.5	11.25	10.50	4.12	29.0
5.5	C200	2.0	1.5	11.25	10.50	4.12	29.0
5.5	C400	1.5	1.2	11.25	10.50	4.12	29.0
5.5	C400	1.5	1.2	11.25	10.50	4.12	29.0
5.5	C400	1.5	1.2	11.25	10.50	4.12	29.0
5.5	C200	2.0	1.5	11.25	10.50	4.12	29.0
	C400	1.5	1.2				
5.5	C200	1.5	1.2	11.25	10.50	4.12	29.0
	C400	1.33	1.0				
5.5	C200	1.5	1.2	11.25	10.50	4.12	29.0
	C400	1.33	1.0				

RLC

600 volts
Outdoor
10 kV BIL
With junction box

UL Recognized component

Contact your ABB representative for bar designs

Mechanical rating: 180 x normal

Primary amps	Style number	IEEE metering accuracy B-0.1	B-0.2	B-0.5	B-0.9	B-1.8
750	7524A54G01	0.3	0.3	0.3	—	—
800	7524A54G02	0.3	0.3	0.3	0.3	—
900	7524A54G03	0.3	0.3	0.3	0.3	—
1000	7524A54G04	0.3	0.3	0.3	0.3	—
1200	7524A54G05	0.3	0.3	0.3	0.3	0.3
1500	7524A54G06	0.3	0.3	0.3	0.3	0.3
2000	7524A54G07	0.3	0.3	0.3	0.3	0.3
3000	7524A54G08	0.3	0.3	0.3	0.3	0.3
4000	7524A54G09	0.3	0.3	0.3	0.3	0.3
600/1200	7524A54G10	0.3	0.3	0.3	—	—
		0.3	0.3	0.3	0.3	0.3
800/1600	7524A54G11	0.3	0.3	0.3	—	—
		0.3	0.3	0.3	0.3	0.3
1000/2000	7524A54G12	0.3	0.3	0.3	0.3	—
		0.3	0.3	0.3	0.3	0.3
1500/3000	7524A54G13	0.3	0.3	0.3	0.3	0.3
		0.3	0.3	0.3	0.3	0.3
2000/4000	7524A54G14	0.3	0.3	0.3	0.3	0.3
		0.3	0.3	0.3	0.3	0.3

Dimensions (in.)

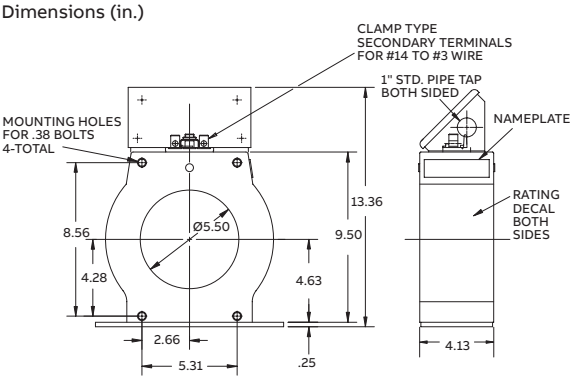

Window diam (in.)	Relaying accuracy	Rating factor 30 °C	Rating factor 55 °C	Height (in.)	Width (in.)	Length (in.)	Weight (lbs.)
5.5	C100	2.0	1.5	13.36	10.50	4.12	22
5.5	C100	2.0	1.5	13.36	10.50	4.12	22
5.5	C100	2.0	1.5	13.36	10.50	4.12	22
5.5	C100	2.0	1.5	13.36	10.50	4.12	22
5.5	C200	2.0	1.5	13.36	10.50	4.12	22
5.5	C200	2.0	1.5	13.36	10.50	4.12	22
5.5	C200	1.5	1.2	13.36	10.50	4.12	22
5.5	C200	1.33	1.0	13.36	10.50	4.12	22
5.5	C200	1.33	1.0	13.36	10.50	4.12	22
5.5	C100/ C200	2.0/2.0	1.5/1.5	13.36	10.50	4.12	22
5.5	C100/ C200	2.0/1.5	1.5/1.2	13.36	10.50	4.12	22
5.5	C100/ C200	2.0/1.5	1.5/1.2	13.36	10.50	4.12	22
5.5	C100/ C200	1.5/1.33	1.2/1.0	13.36	10.50	4.12	22
5.5	C100/ C200	1.5/1.33	1.2/1.0	13.36	10.50	4.12	22

SCT-983

600 volts
Indoor/outdoor
10 kV BIL
60 Hertz

Window diameter options:*
SCT-983 5.0"
SCT-983A 6.0"
SCT-983C 4.0"
SCT-983D 2.0"
SCT-983E 3.0"

Primary amps	Style number	Accuracy/burden Metering	Accuracy/burden Relaying
50	A49S5005010-570	±5% - 2.5 VA	C10
100	A49S1015029-570	1.2B-0.1	C20
200	A49S2015049-570	0.6B-0.1	C40
300	A49S3015069-570	0.3B-0.1	C60
400	A49S4015089-570	0.3B-0.2	C75
500	A49S5015109-570	0.3B-0.5	C100
600	A49S6015109-570	0.3B-0.9	C100
800	A49S8015159-570	0.3B-1.8	C150
1000	A49S1025209-570	0.3B-1.8	C200
1200	A49S1225259-570	0.3B-1.8	C250
1500	A49S1525259-570	0.3B-1.8	C250
2000	A49S2025409-570	0.3B-1.8	C400
2500	A49S2525409-570	0.3B-1.8	C400
3000	**A49S3025409-570	0.3B-1.8	C400
4000	A49S4025409-570	0.3B-1.8	C400
5000	A49S5025409-570	0.3B-1.8	C400
6000	A49S6025409-570	0.3B-1.8	C400

Available in dual and multi-ratio designs.
* Note: above table is for 5" window diameter only.
Accuracy may differ depending on window size.

Available with a secondary terminal box for outdoor use.
Add a “T” as the last digit of style number before “-570”.

One-second thermal/mechanical ratings:
80 x full winding I_{nom} / unlimited mechanical

**IC Approval (AE-1470)

Dimensions (in. [mm])

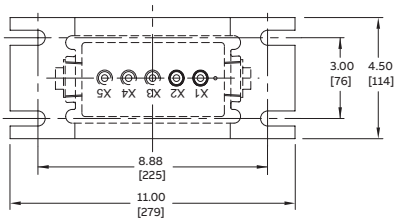

Top view into terminal box and mounting footprint
Slots are 0.56" [14 mm] wide.

Window diam. (in.)	Rating factor @ 30 °C	Height (in.)	Width (in.)	Length (in.)	Weight (lbs.)
5.0	4.0	13.5	9.38	4.63	45–50
5.0	4.0	13.5	9.38	4.63	45–50
5.0	4.0	13.5	9.38	4.63	45–50
5.0	4.0	13.5	9.38	4.63	45–50
5.0	4.0	13.5	9.38	4.63	45–50
5.0	4.0	13.5	9.38	4.63	45–50
5.0	4.0	13.5	9.38	4.63	45–50
5.0	3.0	13.5	9.38	4.63	45–50
5.0	2.0	13.5	9.38	4.63	45–50
5.0	2.0	13.5	9.38	4.63	45–50
5.0	1.5	13.5	9.38	4.63	45–50
5.0	1.5	13.5	9.38	4.63	45–50
5.0	1.0	13.5	9.38	4.63	45–50
5.0	1.0	13.5	9.38	4.63	45–50
5.0	1.0	13.5	9.38	4.63	45–50
5.0	1.0	13.5	9.38	4.63	45–50
5.0	1.0	13.5	9.38	4.63	45–50

RMB-644 and RMB-644A

600 volts
Indoor/outdoor
10 kV BIL
60 Hertz

Thermal rise:
55 °C @ 30 °C ambient

Suitable for mounting in any orientation

Window diameter:
RMB-644: 3.5"
RMB-644A: 6.0"
Weight: 100 lbs. (45 kg)

One-second thermal rating: 100 x nominal
Mechanical rating: 270 x nominal first peak

	Primary amps	Style number	IEEE metering accuracy
RMB-644	200	A120200S1	0.3B-0.2
	300	A120300S1	0.3B-0.5
	400	A120400S1	0.3B-0.9
	500	A120500S1	0.3B-1.8
	600 [1]	A120600S1	0.3B-1.8
	800	A120800S1	0.3B-1.8
	1000	A121000S1	0.3B-1.8
	1200 [1]	A121200S1	0.3B-1.8
	1200 [1]	A121200S1-512	0.3B-1.8
	1500	A121500S1	0.3B-1.8
	2000 [1]	A122000S1	0.3B-1.8
	2000 [1]	A122000S1-512	0.3B-1.8
	2500	A122500S1	0.3B-1.8
	3000 [1]	A123000S1	0.3B-1.8
	3000 [1]	A123000S1-512	0.3B-1.8
	4000 [1]	A124000S1	0.3B-1.8

	Primary amps	Style number	IEEE metering accuracy
RMB-644A	200	A12A0200S1	0.3B-0.1
	300	A12A0300S1	0.3B-0.2
	400	A12A0400S1	0.3B-0.5
	500	A12A0500S1	0.3B-0.9
	600 [1]	A12A0600S1	0.3B-1.8
	800	A12A0800S1	0.3B-1.8
	1000	A12A1000S1	0.3B-1.8
	1200 [1]	A12A1200S1	0.3B-1.8
	1500	A12A1500S1	0.3B-1.8
	2000 [1]	A12A2000S1	0.3B-1.8
	2500	A12A2500S1	0.3B-1.8
	3000 [1]	A12A3000S1	0.3B-1.8
	3000 [1]	A12A3000S1-512	0.3B-1.8
	4000 [1]	A12A4000S1	0.3B-1.8
	5000 [1]	A12A5000S1	0.3B-1.8
	4000 [1]	A124000S1	0.3B-1.8

Dimensions (in. [mm])

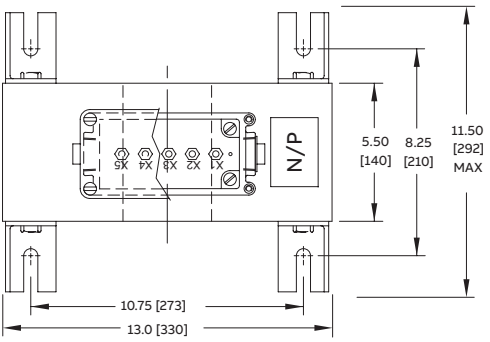

Slots are 0.56" [14 mm] wide.

Window Diam. (in.)	Relaying accuracy	Rating factor @ 30 °C
3.5	C100	3.0
3.5	C200	3.0
3.5	C250	3.0
3.5	C300	3.0
3.5	C400	3.0
3.5	C400	2.0
3.5	C400	2.0
3.5	C400	2.0
3.5	C800	2.0
3.5	C400	2.0
3.5	C400	2.0
3.5	C800	2.0
3.5	C400	2.0
3.5	C400	2.0
3.5	C800	2.0
3.5	C800	1.5

Window Diam. (in.)	Relaying accuracy	Rating factor @ 30 °C
6.0	C50	3.0
6.0	C75	3.0
6.0	C100	3.0
6.0	C150	3.0
6.0	C200	3.0
6.0	C200	2.0
6.0	C400	2.0
6.0	C400	2.0
6.0	C400	2.0
6.0	C400	2.0
6.0	C400	2.0
6.0	C400	2.0
6.0	C800	2.0
6.0	C800	1.5
6.0	C800	1.5
6.0	C800	1.5

RMBX-644A

600 volts
Indoor/outdoor
10 kV BIL
60 Hertz
High accuracy

The RMBX-644A is part of ABB's AccuRange® current transformer portfolio of products with 0.15% accuracy from 1% of nominal current through rating factor.

Thermal rise:
55 °C @ 30 °C ambient

Suitable for mounting in any orientation

Weight: 100 lbs. (45 kg)

One-second thermal rating: 100 x nominal
Mechanical rating: 270 x nominal first peak

Primary amps	Style number		IEEE metering accuracy
400	A12A0400X1-NC	0.15SB-0.9	0.3SB-1.8
500	A12A0500X1-NC	0.15SB-0.9	0.3SB-1.8
600	A12A0600X1-NC	0.15SB-0.9	0.3SB-1.8
800	A12A0800X1-NC	0.15SB-0.9	0.3SB-1.8
1000	A12A1000X1-NC	0.15SB-1.8	—
1200	A12A1200X1-NC	0.15SB-1.8	—
1500	A12A1500X1-NC	0.15SB-1.8	—
2000	A12A2000X1-NC	0.15SB-1.8	—

Options for RMB-644, RMB-644A and RMBX-644A:

Other ratios and accuracy classes available.

Dual-core available in RMB-644/644A but NOT available in RMBX models.

Standard unit supplied with long mounting legs with terminal box on top (12 o'clock position).

For unit supplied with:

- terminal box on bottom (6 o'clock position), add -616 to end of style number
- terminal box on left side (9 o'clock position), add -698 to end of style number
- terminal box on right side (3 o'clock position), add -699 to end of style number
- terminal box ONLY (no mounting legs), add -705 to end of style number
- body only (no terminal box and no mounting legs), add -706 to end of style number
- flush-mounting legs and no terminal box, add -707 to end of style number
- flush-mounting legs and terminal box, add -708 to end of style number

Contact your ABB representative for more information.

Dimensions (in. [mm])

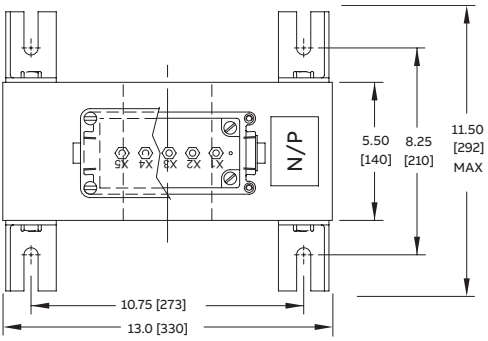

Slots are 0.56" [14 mm] wide.

Window diam. (in.)	Accuracy range (amps)
6.0	4 to 1200
6.0	5 to 2000
6.0	6 to 2400
6.0	8 to 3200
6.0	10 to 4000
6.0	12 to 4800
6.0	15 to 4500
6.0	20 to 6000

PPW and PPD

600 volts
Indoor/outdoor
10 kV BIL
60 Hertz

UL Recognized component

Thermal rating:
150 VA @ 30 °C ambient
100 VA @ 55 °C ambient

	Primary voltage	Style number	Ratio
PPW	120/208Y	7526A04G07	1:1
	240/416Y	7526A04G01	2:1
	276/478Y	7526A04G09	2.3:1
	288/500Y	7526A04G02	2.4:1
	300/520Y	7526A04G03	2.5:1
	480/480Y	7526A04G04	4:1
	500/500Y	7526A04G11	4.167:1
	600/600Y	7526A04G05	5:1
	600/600Y	7526A04G12	2.5:1

	Primary voltage	Style number	Ratio
PPD	69.4/120Y	7526A05G06	0.58:1
	120/208Y	7526A05G07	1:1
	208/208Y	7526A05G08	1.73:1
	240/416Y	7526A05G01	2:1
	288/500Y	7526A05G02	2.4:1
	300/520Y	7526A05G03	2.5:1
	380/380Y	7526A05G09	3.17:1
	480/480Y	7526A05G04	4:1
	600/600Y	7526A05G05	5:1

Dimensions (in.)

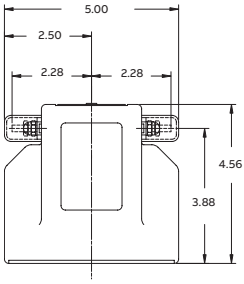

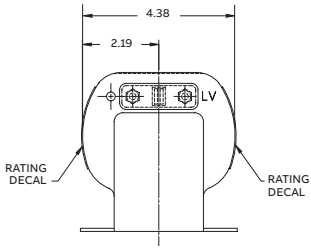

IEEE metering accuracy	Height (in.)	Width (in.)	Length (in.)	Weight (lbs.)
0.6W	4.56	4.50	5.00	9
0.3W, 0.6X	4.56	4.50	5.00	9
0.3W, 0.6X	4.56	4.50	5.00	9
0.3W, 0.6X	4.56	4.50	5.00	9
0.3W, 0.6X	4.56	4.50	5.00	9
0.3W, 0.6X	4.56	4.50	5.00	9
0.3W, 0.6X	4.56	4.50	5.00	9
0.3W, 0.6X	4.56	4.50	5.00	9
0.3W, 0.6X	4.56	4.50	5.00	9

IEEE metering accuracy	Height (in.)	Width (in.)	Length (in.)	Weight (lbs.)
0.6W, 1.2X	4.56	4.50	5.00	9
0.6W, 1.2X	4.56	4.50	5.00	9
0.6W, 1.2X	4.56	4.50	5.00	9
0.6W, 1.2X	4.56	4.50	5.00	9
0.6W, 1.2X	4.56	4.50	5.00	9
0.6W, 1.2X	4.56	4.50	5.00	9
0.6W, 1.2X	4.56	4.50	5.00	9
0.6W, 1.2X	4.56	4.50	5.00	9
0.6W, 1.2X	4.56	4.50	5.00	9

PPM

600 volts
Indoor/outdoor
10 kV BIL
60 Hertz

UL Recognized component

Thermal rating:
500 VA @ 30 °C ambient
350 VA @ 55 °C ambient

PPX styles available with special frequencies, ratios and accuracies. Contact your ABB representative.

Primary voltage	Style number	Ratio
240/416Y	7526A10G01	2:1
288/500Y	7526A10G02	2.4:1
300/520Y	7526A10G03	2.5:1
480/480Y	7526A10G04	4:1
600/600Y	7526A10G05	5:1
120/208Y	7526A10G06	1:1

Dimensions (in.)

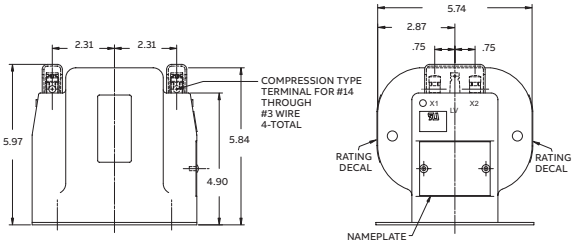

IEEE metering accuracy	Height (in.)	Width (in.)	Length (in.)	Weight (lbs.)
0.3Y	5.97	5.87	6.12	19
0.3Y	5.97	5.87	6.12	19
0.3Y	5.97	5.87	6.12	19
0.3Y	5.97	5.87	6.12	19
0.3Y	5.97	5.87	6.12	19
0.3Y	5.97	5.87	6.12	19

KIR-60

5 kV
Indoor
60 kV BIL
60 Hertz

UL Recognized Component

Mechanical rating:
5–600 amps, 150 x normal
800 amps, 110 x normal
1000 amps, 162 x normal
1200 amps, 135 x normal

Thermal rating:
5–600 amps, 100 x normal, 1 second
800 amps, 75 x normal, 1 second
1000 amps, 60 x normal, 1 second
1200 amps, 50 x normal, 1 second

Primary amps	Style number	IEEE metering accuracy
5	7524A01G01	0.3B-1.8
10	7524A01G02	0.3B-1.8
15	7524A01G03	0.3B-1.8
20	7524A01G04	0.3B-1.8
25	7524A01G05	0.3B-1.8
30	7524A01G06	0.3B-1.8
40	7524A01G07	0.3B-1.8
50	7524A01G08	0.3B-1.8
75	7524A01G09	0.3B-1.8
100	7524A01G10	0.3B-1.8
150	7524A01G11	0.3B-1.8
200	7524A01G12	0.3B-1.8
300	7524A01G13	0.3B-1.8
400	7524A01G14	0.3B-1.8
600	7524A01G15	0.3B-1.8
800	7524A01G16	0.3B-1.8
1000	7524A01G21	0.3B-1.8
1200	7524A01G20	0.3B-1.8

Mounting base dimensions (in.)

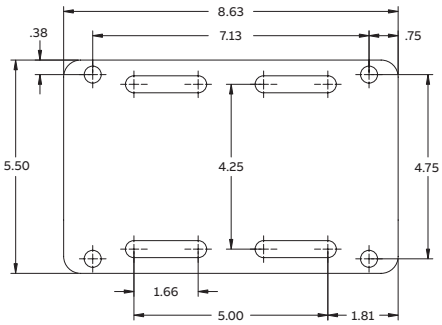

Relaying accuracy	Rating factor	Height (in.)	Width (in.)	Length (in.)	Weight (lbs.)
T100	1.5	8.06	6.13	15.0	35
T100	1.5	8.06	6.13	15.0	35
T100	1.5	8.06	6.13	15.0	35
T100	1.5	8.06	6.13	15.0	35
T100	1.5	8.06	6.13	15.0	35
T100	1.5	8.06	6.13	15.0	35
T100	1.5	8.06	6.13	15.0	35
T100	1.5	8.06	6.13	15.0	35
T100	1.5	8.06	6.13	15.0	35
T100	1.5	8.06	6.13	15.0	35
T100	1.5	8.06	6.13	15.0	35
T100	1.5	8.06	6.13	15.0	38
T100	1.5	8.06	6.13	15.0	38
T100	1.5	8.06	6.13	15.0	38
T100	1.5	8.06	6.13	15.0	38
T100	1.33	8.06	6.13	15.0	38
T100	1.2	8.06	6.13	15.0	38
T100	1.0	8.06	6.13	15.0	38

RMB-631

5 kV
Indoor/outdoor
60 kV BIL
60 Hertz

Suitable for mounting in any orientation

Weight: 100 lbs. (45 kg)

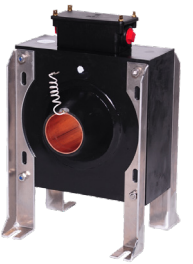

Primary amps	Style number	IEEE metering accuracy
200	B180200S1	0.3B-0.2
300	B180300S1	0.3B-0.5
400	B180400S1	0.3B-0.9
500	B180500S1	0.3B-1.8
600 [1]	B180600S1	0.3B-1.8
800	B180800S1	0.3B-1.8
1000	B181000S1	0.3B-1.8
1200 [1]	B181200S1	0.3B-1.8
1200 [1]	B181200S1-512	0.3B-1.8
1500	B181500S1	0.3B-1.8
2000 [1]	B182000S1	0.3B-1.8
2000 [1]	B182000S1-512	0.3B-1.8
2500	B182500S1	0.3B-1.8
3000 [1]	B183000S1	0.3B-1.8
3000 [1]	B183000S1-512	0.3B-1.8
4000 [1]	B184000S1	0.3B-1.8

[1]Available in multi-ratio. Replace S in style number with M.

One-second thermal rating: 100 x nominal
Mechanical rating: 270 x nominal first peak

Mounting base dimensions (in.) [mm]

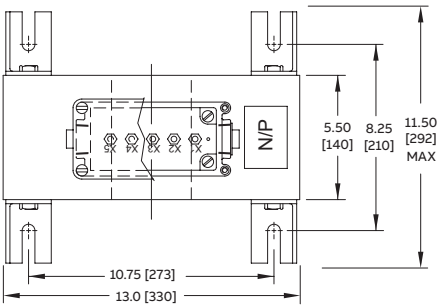

Slots are 0.56" [14 mm] wide.

Window diam. (in.)	Relaying accuracy	Rating factor @ 30 °C	Height (in.)	Width (in.)	Length (in.)	Weight (lbs.)
3.44	C100	3.0	20.3	13.0	11.50	100
3.44	C200	3.0	20.3	13.0	11.50	100
3.44	C250	3.0	20.3	13.0	11.50	100
3.44	C300	3.0	20.3	13.0	11.50	100
3.44	C400	3.0	20.3	13.0	11.50	100
3.44	C400	2.0	20.3	13.0	11.50	100
3.44	C400	2.0	20.3	13.0	11.50	100
3.44	C400	2.0	20.3	13.0	11.50	100
3.44	C800	2.0	20.3	13.0	11.50	100
3.44	C400	2.0	20.3	13.0	11.50	100
3.44	C400	2.0	20.3	13.0	11.50	100
3.44	C800	2.0	20.3	13.0	11.50	100
3.44	C400	2.0	20.3	13.0	11.50	100
3.44	C400	2.0	20.3	13.0	11.50	100
3.44	C800	2.0	20.3	13.0	11.50	100
3.44	C800	1.5	20.3	13.0	11.50	100

RMBX-631

5 kV
Indoor/outdoor
60 kV BIL
60 Hertz
High accuracy

Suitable for mounting
in any orientation

Weight: 100 lbs. (45 kg)

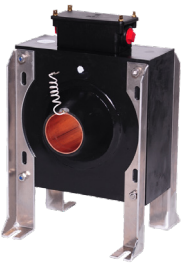

Primary amps	Style number	IEEE metering accuracy
400	B180400X1NC	0.15SB-0.5/0.3SB-0.9
500	B180500X1NC	0.15SB-0.5/0.3SB-1.8
600	B180600X1NC	0.15SB-0.9/0.3SB-1.8
800	B180800X1NC	0.15SB-0.9/0.3SB-1.8
1000	B181000X1NC	0.15SB-1.8
1200	B181200X1NC	0.15SB-1.8
1500	B181500X1NC	0.15SB-1.8
2000	B182000X1NC	0.15SB-1.8

Available with a 19.5" primary bar kit (maximum 4000 A).
Change last digit of style from 1 to 3.

One-second thermal rating: 100 x nominal
Mechanical rating: 270 x nominal first peak

Mounting base dimensions (in.) [mm]

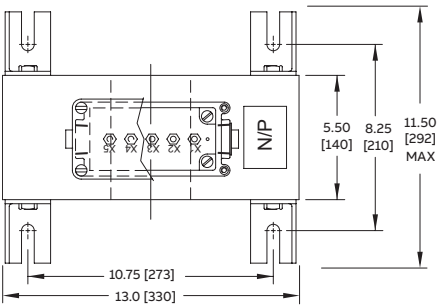

Window diam. (in.)	Rating factor @ 30 °C	Height (in.)	Width (in.)	Length (in.)	Weight (lbs.)
3.44	4.0	20.3	13.0	11.50	100
3.44	4.0	20.3	13.0	11.50	100
3.44	4.0	20.3	13.0	11.50	100
3.44	4.0	20.3	13.0	11.50	100
3.44	4.0	20.3	13.0	11.50	100
3.44	4.0	20.3	13.0	11.50	100
3.44	3.0	20.3	13.0	11.50	100
3.44	2.0	20.3	13.0	11.50	100

KIT-60

5 kV
Indoor
60 kV BIL
60 Hertz

Mechanical rating: all units unlimited

Thermal rating:
800 and 1200 amps: 80 x normal, 1 second
1500 amps and above: 100 x normal, 1 second

	Primary amps	Style number	IEEE metering accuracy
Tube type 3.25" ID	800	7524A42G01	0.3B-0.9
	1200	7524A42G02	0.3B-1.8
	1500	7524A42G03	0.3B-1.8
	2000	7524A42G04	0.3B-1.8
	3000	7524A42G05	0.3B-1.8
	4000	7524A42G06	0.3B-1.8
	600/1200	7524A42G07	0.3B-0.5/0.3B-1.8
	1000/2000	7524A42G08	0.3B-0.9/0.3B-1.8
	2000/4000	7524A42G09	0.3B-1.8/0.3B-1.8

	Primary amps	Style number	IEEE metering accuracy	No. of bars*
With primary bar	800	923A272G01	0.3B-0.9	B
	1200	923A272G02	0.3B-1.8	B
	1500	923A272G03	0.3B-1.8	C
	2000	923A272G04	0.3B-1.8	C
	3000	923A272G05	0.3B-1.8	D
	4000	923A272G06	0.3B-1.8	D
	600/1200	923A272G07	0.3B-0.5/0.3B-1.8	B
	1000/2000	923A272G08	0.3B-0.9/0.3B-1.8	C
	2000/4000	923A272G09	0.3B-1.8/0.3B-1.8	D

*** Primary bar guide (in.)** - (other bar dimensions available)
Maximum current (amps) = primary amps x RF @ 30 °C

A: 1550 amps max

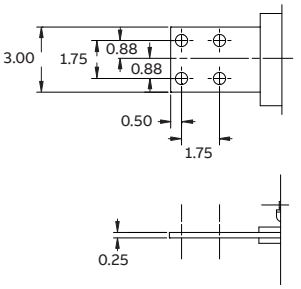

B: 2400 amps max

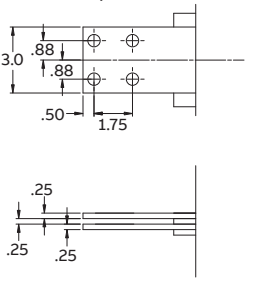

Max current available with rating factor.
Example: 1200 amps with rating factor of 2.0 = 2400 amps

Contact factory for 0.15S accuracy class.

Mounting base dimensions (in.)

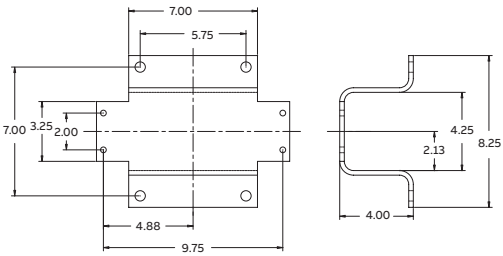

Relaying accuracy	Rating factor	Height (in.)	Width (in.)	Length (in.)	Weight (lbs.)
C100	3.0	15.37	10.50	10.25	40
C200	2.0	15.37	10.50	10.25	40
C200	2.0	15.37	10.50	10.25	40
C200	2.0	15.37	10.50	10.25	40
C200	1.5	15.37	10.50	10.25	40
C200	1.5	15.37	10.50	10.25	40
C100/C200	2.0	15.37	10.50	10.25	40
C100/C200	2.0	15.37	10.50	10.25	40
C100/C200	1.5	15.37	10.50	10.25	40

Relaying accuracy	Rating factor	Height (in.)	Width (in.)	Length (in.)	Weight (lbs.)
C100	2.0	15.38	10.50	19.62	62
C200	2.0	15.38	10.50	19.62	62
C200	2.0	15.38	10.50	19.62	62
C200	1.5	15.38	10.50	19.62	73
C200	1.33	15.38	10.50	19.62	73
C200	1.0	15.38	10.50	19.62	73
C100/C200	3.0/2.0	15.38	10.50	19.62	62
C100/C200	2.0/1.5	15.38	10.50	19.62	73
C200/C200	1.5/1.0	15.38	10.50	19.62	73

C: 3000 amps max

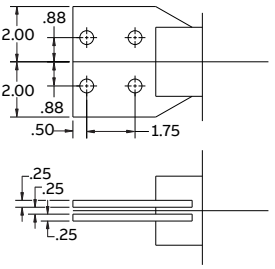

D: 4000 amps max

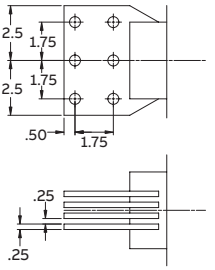

Accessories:
4-hole spade spacer 9625A38H01; 6-hole spade spacer 9625A38H02

KOR-60

5 kV
Outdoor
60 kV BIL
60 Hertz

Creep:
13.3" (338 mm)

Note: Styles listed are encapsulated with HCEP. Contact your ABB representative for styles encapsulated with polyurethane.

Primary amps	Style number	IEEE metering accuracy
5	E-7524A10G01	0.3B-1.8
10	E-7524A10G02	0.3B-1.8
15	E-7524A10G03	0.3B-1.8
20	E-7524A10G04	0.3B-1.8
25	E-7524A10G05	0.3B-1.8
30	E-7524A10G06	0.3B-1.8
40	E-7524A10G07	0.3B-1.8
50	E-7524A10G08	0.3B-1.8
75	E-7524A10G09	0.3B-1.8
100	E-7524A10G10	0.3B-1.8
150	E-7524A10G11	0.3B-1.8
200	E-7524A10G12	0.3B-1.8
300	E-7524A10G13	0.3B-1.8
400	E-7524A10G14	0.3B-1.8
600	E-7524A10G15	0.3B-1.8
800	E-7524A10G16	0.3B-1.8
1000	E-7524A10G17	0.3B-1.8

Mechanical rating:
5–400 A, 270 x normal for 1 second
600 A, 175 x normal for 1 second
800 A, 135 x normal for 1 second
1000 A, 105 x normal for 1 second

Thermal rating:
5–400 A, 100 x normal for 1 second
600 A, 65 x normal for 1 second
800 A, 50 x normal for 1 second
1000 A, 40 x normal for 1 second

Mounting base dimensions (in.) [mm]

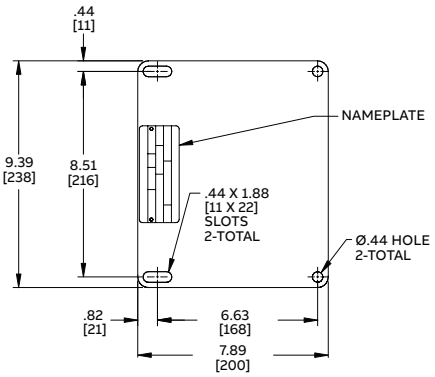

Relaying accuracy	Rating factor	Height (in.)	Width (in.)	Length (in.)	Weight (lbs.)
T100	1.5	12.44	9.63	10.95	40
T100	1.5	12.44	9.63	10.95	40
T100	1.5	12.44	9.63	10.95	40
T100	1.5	12.44	9.63	10.95	40
T100	1.5	12.44	9.63	10.95	40
T100	1.5	12.44	9.63	10.95	40
T100	1.5	12.44	9.63	10.95	40
T100	1.5	12.44	9.63	10.95	40
T100	1.5	12.44	9.63	10.95	40
T100	1.5	12.44	9.63	10.95	40
T100	1.5	12.44	9.63	10.95	40
T100	1.5	12.44	9.63	10.95	40
T100	1.5	12.44	9.63	10.95	40
T100	1.5	12.44	9.63	10.95	40
T100	1.5	12.44	9.63	10.95	40
T100	1.33	12.44	9.63	10.95	40
T70	1.33	12.44	9.63	10.95	40

KOT-60

5 kV
Outdoor
60 kV BIL
60 Hertz
Mechanical rating: all units unlimited

Thermal rating:
800 and 1200 amps: 80 x normal, 1 second
1500 amps and above: 100 x normal, 1 second

	Primary amps	Style number	IEEE metering accuracy
Tube type 3.25" ID	800	7524A32G01	0.3B-0.9
	1200	7524A32G02	0.3B-1.8
	1500	7524A32G03	0.3B-1.8
	2000	7524A32G04	0.3B-1.8
	3000	7524A32G05	0.3B-1.8
	4000	7524A32G06	0.3B-1.8
	600/1200	7524A32G07	0.3B-0.5/B-1.8
	1000/2000	7524A32G08	0.3B-0.9/B-1.8
	2000/4000	7524A32G09	0.3B-1.8/B-1.8

	Primary amps	Style number	IEEE metering accuracy	No. of bars*
With primary bar	800	923A271G01	0.3B-0.9	B
	1200	923A271G02	0.3B-1.8	B
	1500	923A271G03	0.3B-1.8	C
	2000	923A271G04	0.3B-1.8	C
	3000	923A271G05	0.3B-1.8	D
	4000	923A271G06	0.3B-1.8	D
	600/1200	923A271G07	0.3B-0.5/B-1.8	B
	1000/2000	923A271G08	0.3B-0.9/B-1.8	C
	2000/4000	923A271G09	0.3B-1.8/B-1.8	D

*** Primary bar guide (in.)** - (other bar dimensions available)
Maximum current (amps) = primary amps x RF @ 30 °C

A: 1550 amps max

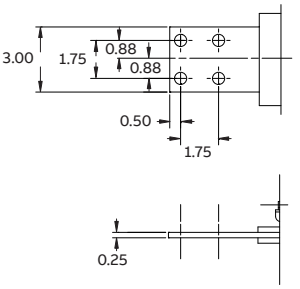

B: 2400 amps max

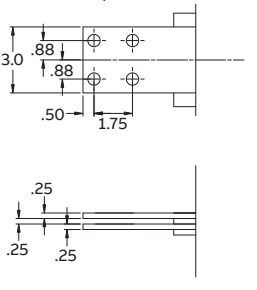

Max current available with rating factor.
Example: 1200 amps with rating factor of 2.0 = 2400 amps
Contact factory for 0.15S accuracy class

Mounting base dimensions (in.)

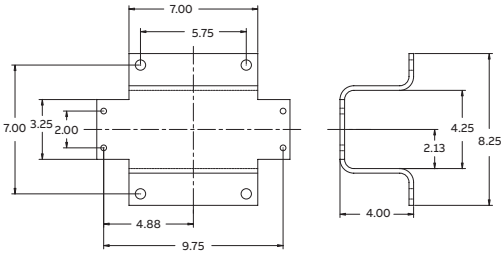

Relaying accuracy	Rating factor	Height (in.)	Width (in.)	Length (in.)	Weight (lbs.)
C100	2.0	17.25	10.50	10.25	40
C200	2.0	17.25	10.50	10.25	40
C200	2.0	17.25	10.50	10.25	40
C200	2.0	17.25	10.50	10.25	40
C200	1.5	17.25	10.50	10.25	40
C200	1.5	17.25	10.50	10.25	40
C100/C200	3.0/2.0	17.25	10.50	10.25	40
C100/C200	3.0/2.0	17.25	10.50	10.25	40
C100/C200	2.0/1.5	17.25	10.50	10.25	40

Relaying accuracy	Rating factor	Height (in.)	Width (in.)	Length (in.)	Weight (lbs.)
C100	2.0	17.25	10.50	19.62	62
C200	2.0	17.25	10.50	19.62	62
C200	2.0	17.25	10.50	19.62	62
C200	1.50	17.25	10.50	19.62	73
C200	1.33	17.25	10.50	19.62	73
C200	1.00	17.25	10.50	19.62	73
C100/C200	3.0/2.0	17.25	10.50	19.62	62
C100/C200	2.0/1.5	17.25	10.50	19.62	73
C100/C200	1.5/1.0	17.25	10.50	19.62	73

C: 3000 amps max

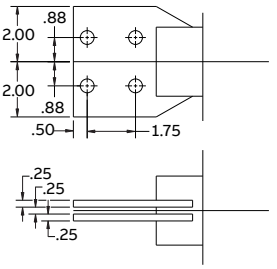

D: 4000 amps max

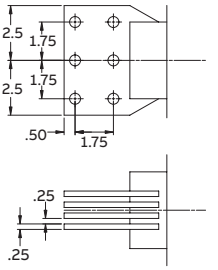

Accessories:
4-hole spade spacer 9625A38H01; 6-hole spade spacer 9625A38H02

STBB-991R

8.7 kV
Indoor/outdoor
75 kV BIL
60 Hertz

Window sizes:
STBB-991R: 15.0"

For upright mounting only

Primary amps	Style number	IEEE metering accuracy
200	C150200S1	N/A
300	C150300S1	N/A
400	C150400S1	N/A
500	C150500S1	N/A
600 [1]	C150600S1	0.3B-0.2
800	C150800S1	0.3B-0.5
1000	C151000S1	0.3B-0.5
1200 [1]	C151200S1	0.3B-0.9
1500	C151500S1	0.3B-1.8
2000 [1]	C152000S1	0.3B-1.8
2000 [1]	C152000S1-511	0.3B-1.8
2500	C152500S1	0.3B-1.8
3000 [1]	C153000S1	0.3B-1.8
3000 [1]	C153000S1-512	0.3B-1.8
4000 [1]	C154000S1	0.3B-1.8
4000 [1]	C154000S1-512	0.3B-1.8
5000 [1]	C155000S1	0.3B-1.8
5000 [1]	C155000S1-512	0.3B-1.8
6000 [1]	C156000S1	0.3B-1.8
8000	C158000S1	0.3B-1.8
9000	C159000S1	0.3B-1.8
10000	C1510000S1	0.3B-1.8
12000	C1512000S1	0.3B-1.8

[1] Available in multi-ratio. Replace S in style number with M.

One-second thermal/mechanical ratings:
80 x full winding I_{nom} / unlimited mechanical

Unit dimensions (in.) [mm]

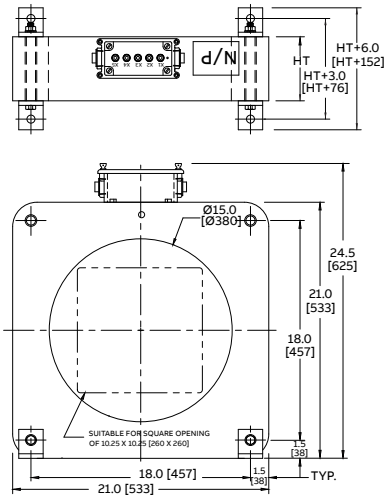

Relaying accuracy	Rating factor @ 30 °C	HT (height, in.)
C25	3.0	4.5
C50	3.0	4.5
C50	2.0	4.5
C75	2.0	4.5
C100	2.0	4.5
C100	2.0	4.5
C150	2.0	4.5
C200	2.0	4.5
C200	2.0	4.5
C200	2.0	4.0
C400	2.0	5.0
C300	2.0	4.0
C400	2.0	4.0
C800	2.0	6.0
C400	2.0	4.0
C800	2.0	5.5
C600	1.5	4.0
C800	1.5	5.5
C800	1.5	6.0
C800	1.5	4.5
C800	1.0	4.5
C800	1.0	4.5
C800	1.0	4.5

KIR-75

8.7 kV
Indoor
75 kV BIL
60 Hertz

UL Recognized component

Mechanical rating:
5–600 amps, 150 x normal
800 amps, 110 x normal
1000 amps, 162 x normal
1200 amps, 135 x normal

Thermal rating:
5–600 amps, 100 x normal for 1 second
800 amps, 75 x normal for 1 second
1000 amps, 60 x normal, 1 second
1200 amps, 50 x normal, 1 second

Primary amps	Style number	IEEE metering accuracy
5	7524A02G01	0.3B-1.8
10	7524A02G02	0.3B-1.8
15	7524A02G03	0.3B-1.8
20	7524A02G04	0.3B-1.8
25	7524A02G05	0.3B-1.8
30	7524A02G06	0.3B-1.8
40	7524A02G07	0.3B-1.8
50	7524A02G08	0.3B-1.8
75	7524A02G09	0.3B-1.8
100	7524A02G10	0.3B-1.8
150	7524A02G11	0.3B-1.8
200	7524A02G12	0.3B-1.8
300	7524A02G13	0.3B-1.8
400	7524A02G14	0.3B-1.8
600	7524A02G15	0.3B-1.8
800	7524A02G16	0.3B-1.8
1200	7524A02G19	0.3B-1.8

Mounting base dimensions (in.)

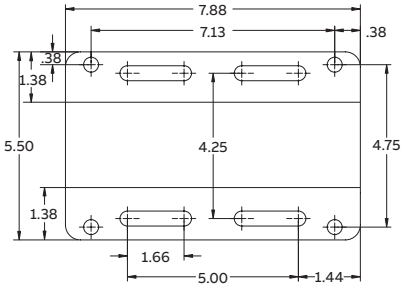

Relaying accuracy	Rating factor	Height (in.)	Width (in.)	Length (in.)	Weight (lbs.)
T100	1.5	10.31	6.13	16.0	35
T100	1.5	10.31	6.13	16.0	35
T100	1.5	10.31	6.13	16.0	35
T100	1.5	10.31	6.13	16.0	35
T100	1.5	10.31	6.13	16.0	35
T100	1.5	10.31	6.13	16.0	35
T100	1.5	10.31	6.13	16.0	35
T100	1.5	10.31	6.13	16.0	35
T100	1.5	10.31	6.13	16.0	35
T100	1.5	10.31	6.13	16.0	35
T100	1.5	10.31	6.13	16.0	35
T100	1.5	10.31	6.13	16.0	35
T100	1.5	10.31	6.13	16.0	35
T100	1.5	10.31	6.13	16.0	38
T100	1.5	10.31	6.13	16.0	38
T100	1.33	10.31	6.13	16.0	38
T100	1.0	10.31	6.13	16.0	38

KIT-75

8.7 kV
Indoor
75 kV BIL
60 Hertz

Mechanical rating: all units unlimited

Thermal rating:
800 and 1200 amps: 80 x normal, 1 second
1500 amps and above: 100 x normal, 1 second

	Primary amps	Style number	IEEE metering accuracy
Tube type 3.25" ID	800	7524A43G01	0.3B-0.9
	1200	7524A43G02	0.3B-1.8
	1500	7524A43G03	0.3B-1.8
	2000	7524A43G04	0.3B-1.8
	3000	7524A43G05	0.3B-1.8
	4000	7524A43G06	0.3B-1.8
	600/1200	7524A43G07	0.3B-0.5/0.3B-1.8
	1000/2000	7524A43G08	0.3B-0.9/0.3B-1.8
	2000/4000	7524A43G09	0.3B-1.8/0.3B-1.8

	Primary amps	Style number	IEEE metering accuracy	No. of bars*
With primary bar	800	923A274G01	0.3B-0.9	B
	1200	923A274G02	0.3B-1.8	B
	1500	923A274G03	0.3B-1.8	C
	2000	923A274G04	0.3B-1.8	C
	3000	923A274G05	0.3B-1.8	D
	4000	923A274G06	0.3B-1.8	D
	600/1200	923A274G07	0.3B-0.5/0.3B-1.8	B
	1000/2000	923A274G08	0.3B-0.9/0.3B-1.8	C
	2000/4000	923A274G09	0.3B-1.8/0.3B-1.8	D

*** Primary bar guide (in.)** - (other bar dimensions available)
Maximum current (amps) = primary amps x RF @ 30 °C

A: 1550 amps max

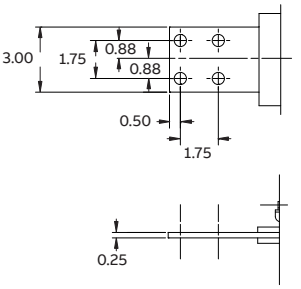

B: 2400 amps max

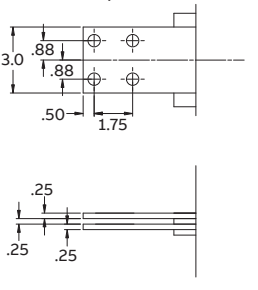

Max current available with rating factor.
Example: 1200 amps with rating factor of 2.0 = 2400 amps

Contact factory for 0.15S accuracy class

Mounting base dimensions (in.)

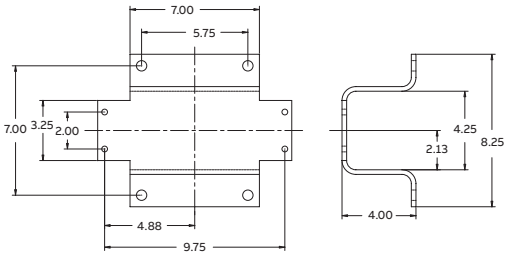

Rating factor	Relaying accuracy	Height (in.)	Width (in.)	Length (in.)	Weight (lbs.)
3.0	C100	15.37	10.50	13.25	43
2.0	C200	15.37	10.50	13.25	43
2.0	C200	15.37	10.50	13.25	43
2.0	C200	15.37	10.50	13.25	43
1.5	C200	15.37	10.50	13.25	43
1.5	C200	15.37	10.50	13.25	43
2.0	C100/C200	15.37	10.50	13.25	43
2.0	C100/C200	15.37	10.50	13.25	43
1.5	C100/C200	15.37	10.50	13.25	43

Rating factor	Relaying accuracy	Height (in.)	Width (in.)	Length (in.)	Weight (lbs.)
2.0	C100	15.38	10.50	22.62	67
2.0	C200	15.38	10.50	22.62	67
2.0	C200	15.38	10.50	22.62	67
1.5	C200	15.38	10.50	22.62	79
1.33	C200	15.38	10.50	22.62	79
1.0	C200	15.38	10.50	22.62	79
3.0/2.0	C100/C200	15.38	10.50	22.62	67
2.0/1.5	C100/C200	15.38	10.50	22.62	79
1.5/1.0	C200/C200	15.38	10.50	22.62	79

C: 3000 amps max

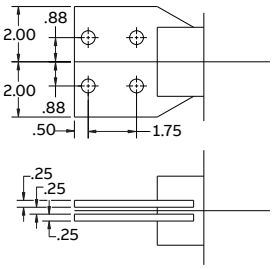

D: 4000 amps max

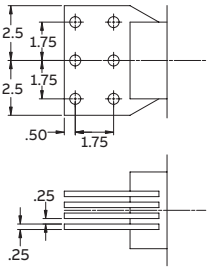

Accessories:
4-hole spade spacer 9625A38H01; 6-hole spade spacer 9625A38H02

KOR-75

8.7 kV
Outdoor
75 kV BIL
60 Hertz

Creep:
13.3" (338 mm)

Strike:
7.5" (191 mm)

Note: Styles listed are encapsulated with HCEP. Contact your ABB representative for styles encapsulated with polyurethane.

Primary amps	Style number	IEEE metering accuracy
5	E-7524A11G01	0.3B-1.8
10	E-7524A11G02	0.3B-1.8
15	E-7524A11G03	0.3B-1.8
20	E-7524A11G04	0.3B-1.8
25	E-7524A11G05	0.3B-1.8
30	E-7524A11G06	0.3B-1.8
40	E-7524A11G07	0.3B-1.8
50	E-7524A11G08	0.3B-1.8
75	E-7524A11G09	0.3B-1.8
100	E-7524A11G10	0.3B-1.8
150	E-7524A11G11	0.3B-1.8
200	E-7524A11G12	0.3B-1.8
300	E-7524A11G13	0.3B-1.8
400	E-7524A11G14	0.3B-1.8
600	E-7524A11G15	0.3B-1.8
800	E-7524A11G16	0.3B-1.8
1000	E-7524A11G17	0.3B-1.8

Mechanical rating:
5–400 A, 270 x normal for 1 second
600 A, 175 x normal for 1 second
800 A, 135 x normal for 1 second
1000 A, 105 x normal for 1 second

Thermal rating:
5–400 A, 100 x normal for 1 second
600 A, 65 x normal for 1 second
800 A, 50 x normal for 1 second
1000 A, 40 x normal for 1 second

Mounting base dimensions (in.) [mm]

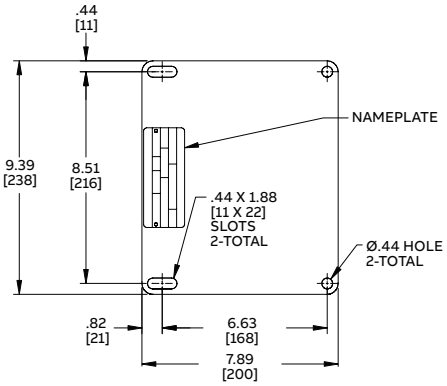

Relaying accuracy	Rating factor	Height (in.)	Width (in.)	Length (in.)	Weight (lbs.)
T100	1.5	12.44	9.63	10.95	40
T100	1.5	12.44	9.63	10.95	40
T100	1.5	12.44	9.63	10.95	40
T100	1.5	12.44	9.63	10.95	40
T100	1.5	12.44	9.63	10.95	40
T100	1.5	12.44	9.63	10.95	40
T100	1.5	12.44	9.63	10.95	40
T100	1.5	12.44	9.63	10.95	40
T100	1.5	12.44	9.63	10.95	40
T100	1.5	12.44	9.63	10.95	40
T100	1.5	12.44	9.63	10.95	40
T100	1.5	12.44	9.63	10.95	40
T100	1.5	12.44	9.63	10.95	40
T100	1.5	12.44	9.63	10.95	40
T100	1.5	12.44	9.63	10.95	40
T100	1.33	12.44	9.63	10.95	40
T70	1.33	12.44	9.63	10.95	40

KOT-75

8.7 kV
Outdoor
75 kV BIL
60 Hertz

Mechanical rating: all units unlimited

Thermal rating:
800 and 1200 amps: 80 x normal, 1 second
1500 amps and above: 100 x normal, 1 second

	Primary amps	Style number	IEEE metering accuracy
Tube type 3.25" ID	800	7524A33G01	0.3B-0.9
	1200	7524A33G02	0.3B-1.8
	1500	7524A33G03	0.3B-1.8
	2000	7524A33G04	0.3B-1.8
	3000	7524A33G05	0.3B-1.8
	4000	7524A33G06	0.3B-1.8
	600/1200	7524A33G07	0.3B-0.5/B-1.8
	1000/2000	7524A33G08	0.3B-0.9/B-1.8
	2000/4000	7524A33G09	0.3B-1.8/B-1.8

	Primary amps	Style number	IEEE metering accuracy	No. of bars*
With primary bar	800	923A273G01	0.3B-0.9	B
	1200	923A273G02	0.3B-1.8	B
	1500	923A273G03	0.3B-1.8	C
	2000	923A273G04	0.3B-1.8	C
	3000	923A273G05	0.3B-1.8	D
	4000	923A273G06	0.3B-1.8	D
	600/1200	923A273G07	0.3B-0.5/B-1.8	B
	1000/2000	923A273G08	0.3B-0.9/B-1.8	C
	2000/4000	923A273G09	0.3B-1.8/B-1.8	D

*** Primary bar guide (in.)** - (other bar dimensions available)
Maximum current (amps) = primary amps x RF @ 30 °C

A: 1550 amps max

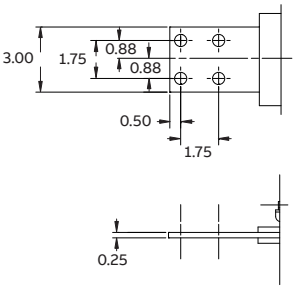

B: 2400 amps max

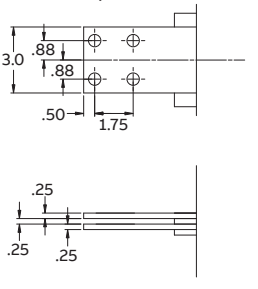

Max current available with rating factor.
Example: 1200 amps with rating factor of 2.0 = 2400 amps
Contact factory for 0.15S accuracy class

Mounting base dimensions (in.)

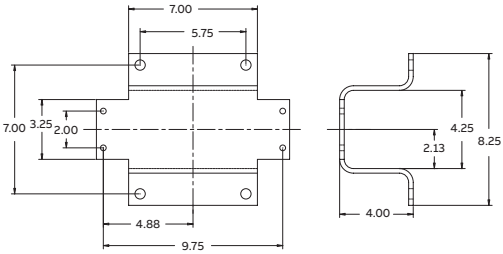

Relaying accuracy	Rating factor	Height (in.)	Width (in.)	Length (in.)	Weight (lbs.)
C100	2.0	17.25	10.50	13.25	43
C200	2.0	17.25	10.50	13.25	43
C200	2.0	17.25	10.50	13.25	43
C200	2.0	17.25	10.50	13.25	43
C200	1.5	17.25	10.50	13.25	43
C200	1.5	17.25	10.50	13.25	43
C100/C200	3.0/2.0	17.25	10.50	13.25	43
C100/C200	3.0/2.0	17.25	10.50	13.25	43
C100/C200	2.0/1.5	17.25	10.50	13.25	43

Relaying accuracy	Rating factor	Height (in.)	Width (in.)	Length (in.)	Weight (lbs.)
C100	2.0	17.25	10.50	22.62	67
C200	2.0	17.25	10.50	22.62	67
C200	2.0	17.25	10.50	22.62	67
C200	1.50	17.25	10.50	22.62	79
C200	1.33	17.25	10.50	22.62	79
C200	1.00	17.25	10.50	22.62	79
C100/C200	3.0/2.0	17.25	10.50	22.62	67
C100/C200	2.0/1.5	17.25	10.50	22.62	79
C100/C200	1.5/1.0	17.25	10.50	22.62	79

C: 3000 amps max

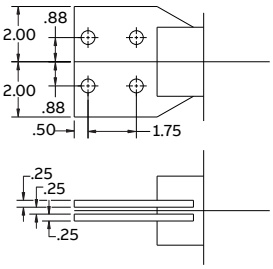

D: 4000 amps max

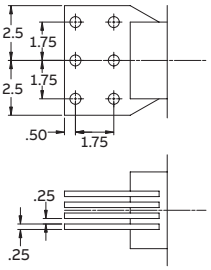

Accessories:
4-hole spade spacer 9625A38H01; 6-hole spade spacer 9625A38H02

KIR-11

15 kV
Indoor
110 kV BIL
60 Hertz

UL recognized component

Mechanical rating:
5–600 amps, 150 x normal
800 amps, 110 x normal
1000 amps, 162 x normal
1200 amps, 135 x normal

Thermal rating:
5–600 amps, 100 x normal for 1 second
800 amps, 75 x normal for 1 second
1000 amps, 60 x normal, 1 second
1200 amps, 50 x normal, 1 second

	Primary amps	Style number	IEEE metering accuracy
Single ratio	5	7524A03G01	0.3B-1.8
	10	7524A03G02	0.3B-1.8
	15	7524A03G03	0.3B-1.8
	20	7524A03G04	0.3B-1.8
	25	7524A03G05	0.3B-1.8
	30	7524A03G06	0.3B-1.8
	40	7524A03G07	0.3B-1.8
	50	7524A03G08	0.3B-1.8
	75	7524A03G09	0.3B-1.8
	100	7524A03G10	0.3B-1.8
	150	7524A03G11	0.3B-1.8
	200	7524A03G12	0.3B-1.8
	300	7524A03G13	0.3B-1.8
	400	7524A03G14	0.3B-1.8
	500	7524A03G15	0.3B-1.8
	600	7524A03G16	0.3B-1.8
	800	7524A03G17	0.3B-1.8
	1000	7524A03G21	0.3B-1.8
	1200	7524A03G18	0.3B-1.8

	Primary amps	Style number	IEEE metering accuracy
Dual ratio	5/10	7524A04G01	0.3B-0.9/0.3B-1.8
	10/20	7524A04G02	0.3B-0.9/0.3B-1.8
	20/40	7524A04G03	0.3B-0.9/0.3B-1.8
	25/50	7524A04G04	0.3B-0.9/0.3B-1.8
	50/100	7524A04G05	0.3B-0.9/0.3B-1.8
	75/150	7524A04G06	0.3B-0.9/0.3B-1.8
	100/200	7524A04G07	0.3B-0.9/0.3B-1.8
	150/300	7524A04G08	0.3B-0.9/0.3B-1.8
	200/400	7524A04G09	0.3B-0.9/0.3B-1.8
	300/600	7524A04G10	0.3B-0.9/0.3B-1.8
	400/800	7524A04G11	0.3B-0.9/0.3B-1.8
	600/1200	7524A04G14	0.3B-0.9/0.3B-1.8

Mounting base dimensions (in.)

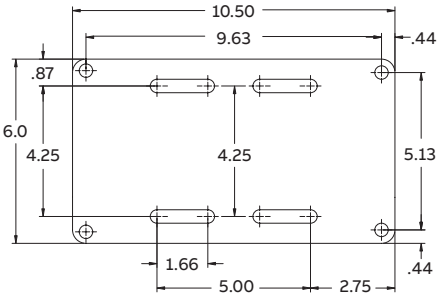

Relaying accuracy	Rating factor	Height (in.)	Width (in.)	Length (in.)	Weight (lbs.)
T200	1.5	9.87	6.75	23	56
T200	1.5	9.87	6.75	23	56
T200	1.5	9.87	6.75	23	56
T200	1.5	9.87	6.75	23	56
T200	1.5	9.87	6.75	23	56
T200	1.5	9.87	6.75	23	56
T200	1.5	9.87	6.75	23	56
T200	1.5	9.87	6.75	23	56
T200	1.5	9.87	6.75	23	56
T200	1.5	9.87	6.75	23	56
T200	1.5	9.87	6.75	23	56
T200	1.5	9.87	6.75	23	56
T200	1.5	9.87	6.75	23	56
T200	1.5	9.87	6.75	23	61
T200	1.5	9.87	6.75	23	61
T200	1.5	9.87	6.75	23	61
T200	1.33	9.87	6.75	23	61
T200	1.0	9.87	6.75	23	61
T200	1.0	9.87	6.75	23	61

Relaying accuracy	Rating factor	Height (in.)	Width (in.)	Length (in.)	Weight (lbs.)
T90/T200	2.0/1.5	9.87	6.75	23	56
T90/T200	2.0/1.5	9.87	6.75	23	56
T90/T200	2.0/1.5	9.87	6.75	23	56
T90/T200	2.0/1.5	9.87	6.75	23	56
T90/T200	2.0/1.5	9.87	6.75	23	56
T90/T200	2.0/1.5	9.87	6.75	23	56
T90/T200	2.0/1.5	9.87	6.75	23	56
T90/T200	2.0/1.5	9.87	6.75	23	61
T90/T200	2.0/1.5	9.87	6.75	23	61
T90/T200	2.0/1.5	9.87	6.75	23	61
T100/T200	2.0/1.33	9.87	6.75	23	61
T90/T200	2.0/1.5	9.87	6.75	23	61

KIR-11ES

15 kV
Indoor
110 kV BIL
60 Hertz
High accuracy

Thermal rating:
5–600 amps, 100 x normal for 1 second
800 amps, 75 x normal for 1 second
1000 amps, 162 x normal
1200 amps, 135 x normal

Primary amps	Style number	IEEE Metering accuracy	Mechanical rating
5	923A397G01	0.15SB-0.5	150
10	923A397G02	0.15SB-0.5	150
15	923A397G03	0.15SB-0.5	150
20	923A397G04	0.15SB-0.5	150
25	923A397G05	0.15SB-0.5	150
30	923A397G06	0.15SB-0.5	150
40	923A397G07	0.15SB-0.5	150
50	923A397G08	0.15SB-0.5	150
75	923A397G09	0.15SB-0.5	150
100	923A397G10	0.15SB-0.5	150
150	923A397G11	0.15SB-0.5	150
200	923A397G12	0.15SB-0.5	150
300	923A397G13	0.15SB-0.5	150
400	923A397G14	0.15SB-0.5	150
500	923A397G15	0.15SB-0.5	110
600	923A397G16	0.15SB-0.5	150
800	923A397G17	0.15SB-0.5	110
1000	923A397G21	0.15SB-0.5	110
1200	923A397G18	0.15SB-0.5	110

Mounting base dimensions (in.)

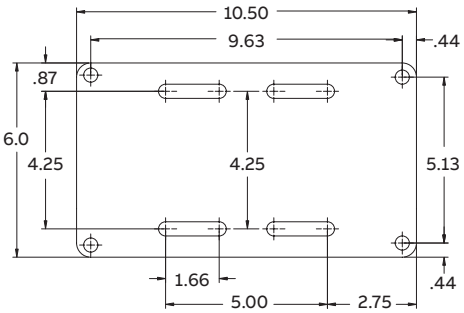

Relaying accuracy	Rating factor	Height (in.)	Width (in.)	Length (in.)	Weight (lbs.)
T200	1.5	9.87	6.75	23	56
T200	1.5	9.87	6.75	23	56
T200	1.5	9.87	6.75	23	56
T200	1.5	9.87	6.75	23	56
T200	1.5	9.87	6.75	23	56
T200	1.5	9.87	6.75	23	56
T200	1.5	9.87	6.75	23	56
T200	1.5	9.87	6.75	23	56
T200	1.5	9.87	6.75	23	56
T200	1.5	9.87	6.75	23	56
T200	1.5	9.87	6.75	23	56
T200	1.5	9.87	6.75	23	56
T200	1.5	9.87	6.75	23	56
T200	1.5	9.87	6.75	23	61
T200	1.0	9.87	6.75	23	61
T200	1.5	9.87	6.75	23	61
T200	1.33	9.87	6.75	23	61
T200	1.0	9.87	6.75	23	61
T200	1.0	9.87	6.75	23	61

KIT-11

15 kV
Indoor
110 kV BIL
60 Hertz

Mechanical rating: all units unlimited

Thermal rating:
800 and 1200 amps: 80 x normal, 1 second
1500 amps and above: 100 x normal, 1 second

	Primary amps	Style number	IEEE metering accuracy
Tube type 3.25" ID	800	7524A44G01	0.3B-0.9
	1200	7524A44G02	0.3B-1.8
	1500	7524A44G03	0.3B-1.8
	2000	7524A44G04	0.3B-1.8
	3000	7524A44G05	0.3B-1.8
	4000	7524A44G06	0.3B-1.8
	600/1200	7524A44G07	0.3B-0.5/0.3B-1.8
	1000/2000	7524A44G08	0.3B-0.9/0.3B-1.8
	2000/4000	7524A44G09	0.3B-1.8/0.3B-1.8

	Primary amps	Style number	IEEE metering accuracy	No. of bars*
With primary bar	800	923A277G01	0.3B-0.9	B
	1200	923A277G02	0.3B-1.8	B
	1500	923A277G03	0.3B-1.8	C
	2000	923A277G04	0.3B-1.8	C
	3000	923A277G05	0.3B-1.8	D
	4000	923A277G06	0.3B-1.8	D
	600/1200	923A277G07	0.3B-0.5/0.3B-1.8	B
	1000/2000	923A277G08	0.3B-0.9/0.3B-1.8	C
	2000/4000	923A277G09	0.3B-1.8/0.3B-1.8	D

*** Primary bar guide (in.)** - (other bar dimensions available)
Maximum current (amps) = primary amps x RF @ 30 °C

A: 1550 amps max

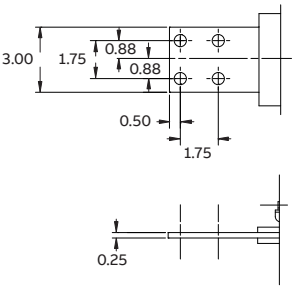

B: 2400 amps max

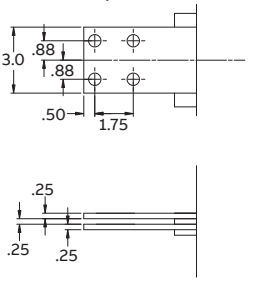

Max current available with rating factor.
Example: 1200 amps with rating factor of 2.0 = 2400 amps

Contact factory for 0.15S accuracy class

Mounting base dimensions (in.)

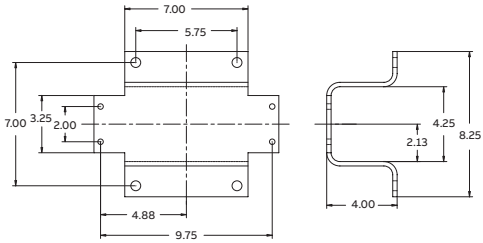

Relaying accuracy	Rating factor	Height (in.)	Width (in.)	Length (in.)	Weight (lbs.)
C100	3.0	15.37	10.50	17.75	47
C200	2.0	15.37	10.50	17.75	47
C200	2.0	15.37	10.50	17.75	47
C200	2.0	15.37	10.50	17.75	47
C200	1.5	15.37	10.50	17.75	47
C200	1.5	15.37	10.50	17.75	47
C100/C200	2.0	15.37	10.50	17.75	47
C100/C200	2.0	15.37	10.50	17.75	47
C100/C200	1.5	15.37	10.50	17.75	47

Relaying accuracy	Rating factor	Height (in.)	Width (in.)	Length (in.)	Weight (lbs.)
C100	3.0	15.38	10.50	27.12	75
C200	2.0	15.38	10.50	27.12	75
C200	2.0	15.38	10.50	27.12	75
C400	1.5	15.38	10.50	27.12	89
C200	1.33	15.38	10.50	27.12	89
C200	1.0	15.38	10.50	27.12	89
C100/C200	3.0/2.0	15.38	10.50	27.12	75
C100/C200	2.0/1.5	15.38	10.50	27.12	89
C200/C200	1.5/1.0	15.38	10.50	27.12	89

C: 3000 amps max

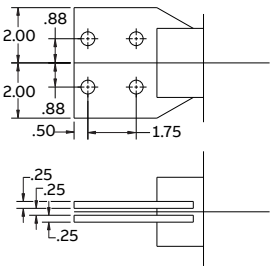

D: 4000 amps max

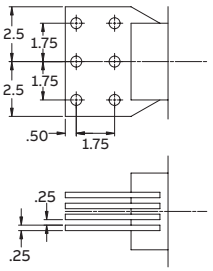

Accessories:
4-hole spade spacer 9625A38H01; 6-hole spade spacer 9625A38H02

KON-11ER

15 kV
Outdoor
110 kV BIL
60 Hertz

Creep:
19.5" (495 mm)

The KON-11ER is part of ABB's AccuRange® current transformer portfolio of products with 0.15% accuracy from 1% of nominal current through rating factor.

Primary amps	Style number	Thermal rating	Mechanical rating	IEEE metering accuracy
200	E-923A427G01	75	200	0.15SB-1.8
1000	E-923A427G02	60	162	0.15SB-1.8

+ Not to be used for relaying applications

KON-11

15 kV
Outdoor
110 kV BIL
60 Hertz

Creep:
19.5" (495 mm)

Note: Styles listed are encapsulated with HCEP. Contact your ABB representative for styles encapsulated with polyurethane.

Primary amps	Style number	Thermal rating	Mechanical rating	IEEE metering accuracy
5	E-7524A25G16	100	270	0.3B-0.5
10	E-7524A25G01	100	270	0.3B-0.5
15	E-7524A25G02	100	270	0.3B-0.5
20	E-7524A25G03	100	270	0.3B-0.5
25	E-7524A25G04	100	270	0.3B-0.5
30	E-7524A25G05	100	270	0.3B-0.5
40	E-7524A25G06	100	270	0.3B-0.5
50	E-7524A25G07	100	270	0.3B-0.5
75	E-7524A25G08	100	270	0.3B-0.5
100	E-7524A25G09	100	270	0.3B-0.5
150	E-7524A25G10	100	270	0.3B-0.5
200	E-7524A25G11	100	270	0.3B-0.5
300	E-7524A25G12	100	270	0.3B-0.5
400	E-7524A25G13	100	270	0.3B-0.5
600	E-7524A25G14	100	270	0.3B-0.5
800	E-7524A25G15	75	202	0.3B-0.5
1000	E-7524A25G18	60	162	0.3B-0.5
1200	E-7524A25G19	50	135	0.3B-0.5

Product bulletin:
1VAP429242-DB

Mounting base dimensions (in.) [mm]

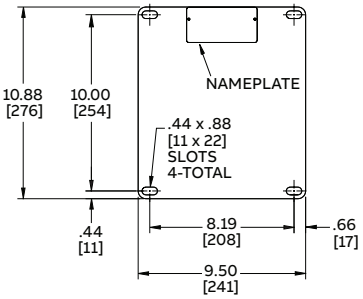

Relaying accuracy	Rating factor	Height (in.)	Width (in.)	Length (in.)	Weight (lbs.)
+	1.5	13.81	10.88	12.41	44
+	1.5	13.81	10.88	12.41	44

Product bulletin:
1VAP429241-DB

Mounting base dimensions (in.) [mm]

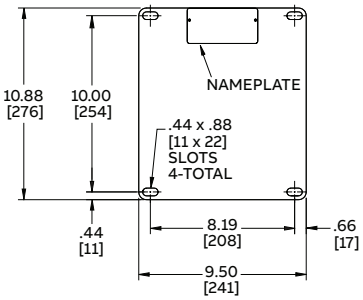

Relaying accuracy	Rating factor	Height (in.)	Width (in.)	Length (in.)	Weight (lbs.)
C40	3.0	13.81	10.88	12.41	44
C40	3.0	13.81	10.88	12.41	44
C40	3.0	13.81	10.88	12.41	44
C40	3.0	13.81	10.88	12.41	44
C40	3.0	13.81	10.88	12.41	44
C40	3.0	13.81	10.88	12.41	44
C40	3.0	13.81	10.88	12.41	44
C40	3.0	13.81	10.88	12.41	44
C40	3.0	13.81	10.88	12.41	44
C40	3.0	13.81	10.88	12.41	44
C40	3.0	13.81	10.88	12.41	44
C40	3.0	13.81	10.88	12.41	44
C40	3.0	13.81	10.88	12.41	44
C40	3.0	13.81	10.88	12.41	44
C40	2.0	13.81	10.88	12.41	44
C40	1.5	13.81	10.88	12.41	44
C40	1.2	13.81	10.88	12.41	44
C40	1.0	13.81	10.88	12.41	44

KOR-11

15 kV
Outdoor
110 kV BIL
60 Hertz

Creep: 20.8" (528 mm)

Mechanical rating:
5–600 amps, 270 x normal
800 amps, 200 x normal
1000 amps, 162 x normal
1200 amps, 135 x normal

Thermal Rating:
5–600 amps, 100 x normal for 1 second;
800 amps, 75 x normal for 1 second; 1000 amps, 60 x normal for 1 second;
1200 amps, 50 x normal for 1 second

Note: Styles listed are encapsulated with HCEP. Contact your ABB representative for styles encapsulated with polyurethane.

	Primary amps	Style number	IEEE metering accuracy
Single ratio	5	E-7524A12G01	0.3B-1.8
	10	E-7524A12G02	0.3B-1.8
	15	E-7524A12G03	0.3B-1.8
	20	E-7524A12G04	0.3B-1.8
	25	E-7524A12G05	0.3B-1.8
	30	E-7524A12G06	0.3B-1.8
	40	E-7524A12G07	0.3B-1.8
	50	E-7524A12G08	0.3B-1.8
	75	E-7524A12G09	0.3B-1.8
	100	E-7524A12G10	0.3B-1.8
	150	E-7524A12G11	0.3B-1.8
	200	E-7524A12G12	0.3B-1.8
	300	E-7524A12G13	0.3B-1.8
	400	E-7524A12G14	0.3B-1.8
	600	E-7524A12G15	0.3B-1.8
	800	E-7524A12G16	0.3B-1.8
	1000	E-7524A12G18	0.3B-1.8
	1200	E-7524A12G17	0.3B-1.8

	Primary amps	Style number	IEEE metering accuracy
Dual ratio	5/10	E-7524A13G01	0.3B-0.9/0.3B-1.8
	10/20	E-7524A13G02	0.3B-0.9/0.3B-1.8
	20/40	E-7524A13G03	0.3B-0.9/0.3B-1.8
	25/50	E-7524A13G04	0.3B-0.9/0.3B-1.8
	50/100	E-7524A13G05	0.3B-0.9/0.3B-1.8
	75/150	E-7524A13G06	0.3B-0.9/0.3B-1.8
	100/200	E-7524A13G07	0.3B-0.9/0.3B-1.8
	150/300	E-7524A13G08	0.3B-0.9/0.3B-1.8
	200/400	E-7524A13G09	0.3B-0.9/0.3B-1.8
	300/600	E-7524A13G10	0.3B-0.9/0.3B-1.8
	400/800	E-7524A13G11	0.3B-0.9/0.3B-1.8
	600/1200	E-7524A13G12	0.3B-0.9/0.3B-1.8

Mounting base dimensions (in.) [mm]

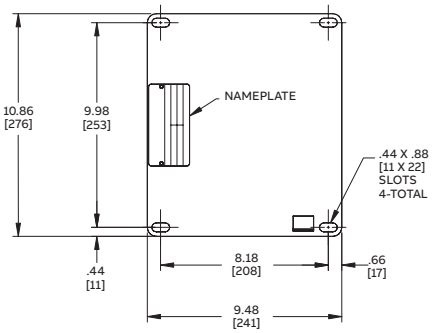

Relaying accuracy	Rating factor	Height (in.)	Width (in.)	Length (in.)	Weight (lbs.)
T200	1.5	15.75	11.0	12.48	67
T200	1.5	15.75	11.0	12.48	67
T200	1.5	15.75	11.0	12.48	67
T200	1.5	15.75	11.0	12.48	67
T200	1.5	15.75	11.0	12.48	67
T200	1.5	15.75	11.0	12.48	67
T200	1.5	15.75	11.0	12.48	67
T200	1.5	15.75	11.0	12.48	67
T200	1.5	15.75	11.0	12.48	67
T200	1.5	15.75	11.0	12.48	67
T200	1.5	15.75	11.0	12.48	67
T200	1.5	15.75	11.0	12.48	67
T200	1.5	15.75	11.0	12.48	67
T200	1.5	15.75	11.0	12.48	67
T200	1.5	15.75	11.0	12.48	67
T200	1.33	15.75	11.0	12.48	67
T150	1.5	15.75	11.0	12.48	67
T200	1.5	15.75	11.0	12.48	67

Relaying accuracy	Rating factor	Height (in.)	Width (in.)	Length (in.)	Weight (lbs.)
T90/T200	2.0/1.5	15.75	11.0	12.48	67
T90/T200	2.0/1.5	15.75	11.0	12.48	67
T90/T200	2.0/1.5	15.75	11.0	12.48	67
T90/T200	2.0/1.5	15.75	11.0	12.48	67
T90/T200	2.0/1.5	15.75	11.0	12.48	67
T90/T200	2.0/1.5	15.75	11.0	12.48	67
T90/T200	2.0/1.5	15.75	11.0	12.48	67
T90/T200	2.0/1.5	15.75	11.0	12.48	67
T90/T200	2.0/1.5	15.75	11.0	12.48	67
T90/T200	2.0/1.5	15.75	11.0	12.48	67
T100/T200	2.0/1.5	15.75	11.0	12.48	67
T90/T200	2.0/1.5	15.75	11.0	12.48	67

KOR-11E

15 kV
Outdoor
110 kV BIL
60 Hertz
High accuracy

Creep: 20.0" (508 mm)

Mechanical rating:
5–600 amps, 270 x normal
800 amps, 200 x normal
1000 amps, 162 x normal
1200 amps, 135 x normal

Thermal rating:
5–600 amps, 100 x normal for 1 second
800 amps, 75 x normal for 1 second
1000 amps, 60 x normal for 1 second
1200 amps, 50 x normal for 1 second

Primary amps	Style number	IEEE metering accuracy
5	E-7881A92G01	0.15B-0.5/0.3B-1.8
10	E-7881A92G02	0.15B-0.5/0.3B-1.8
15	E-7881A92G03	0.15B-0.5/0.3B-1.8
20	E-7881A92G04	0.15B-0.5/0.3B-1.8
25	E-7881A92G05	0.15B-0.5/0.3B-1.8
30	E-7881A92G06	0.15B-0.5/0.3B-1.8
40	E-7881A92G07	0.15B-0.5/0.3B-1.8
50	E-7881A92G08	0.15B-0.5/0.3B-1.8
75	E-7881A92G09	0.15B-0.5/0.3B-1.8
100	E-7881A92G10	0.15B-0.5/0.3B-1.8
150	E-7881A92G11	0.15B-0.5/0.3B-1.8
200	E-7881A92G12	0.15B-0.5/0.3B-1.8
300	E-7881A92G13	0.15B-0.5/0.3B-1.8
400	E-7881A92G14	0.15B-0.5/0.3B-1.8
600	E-7881A92G15	0.15B-0.5/0.3B-1.8
800	E-7881A92G16	0.15B-0.5/0.3B-1.8
1200	E-7881A92G17	0.15B-0.5/0.3B-1.8
1000	E-7881A92G18	0.15B-0.5/0.3B-1.8

Mounting base dimensions (in.) [mm]

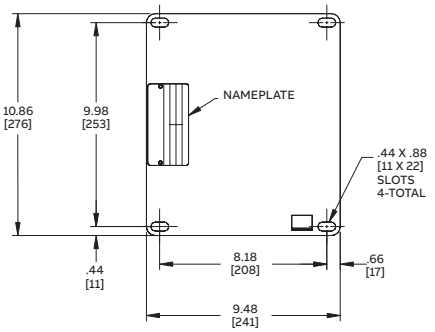

Relaying accuracy	Rating factor	Height (in.)	Width (in.)	Length (in.)	Weight (lbs.)
T200	1.5	15.75	11.0	12.48	67
T200	1.5	15.75	11.0	12.48	67
T200	1.5	15.75	11.0	12.48	67
T200	1.5	15.75	11.0	12.48	67
T200	1.5	15.75	11.0	12.48	67
T200	1.5	15.75	11.0	12.48	67
T200	1.5	15.75	11.0	12.48	67
T200	1.5	15.75	11.0	12.48	67
T200	1.5	15.75	11.0	12.48	67
T200	1.5	15.75	11.0	12.48	67
T200	1.5	15.75	11.0	12.48	67
T200	1.5	15.75	11.0	12.48	67
T200	1.5	15.75	11.0	12.48	67
T200	1.5	15.75	11.0	12.48	67
T200	1.5	15.75	11.0	12.48	67
T200	1.33	15.75	11.0	12.48	67
T200	1.5	15.75	11.0	12.48	67
T150	1.5	15.75	11.0	12.48	67

KOT-11

15 kV
Outdoor
110 kV BIL
60 Hertz

Mechanical rating: all units unlimited

Thermal rating:
800 and 1200 amps: 80 x normal, 1 second
1500 amps and above: 100 x normal, 1 second

	Primary amps	Style number	IEEE metering accuracy
Tube type 3.25" ID	800	7524A34G01	0.3B-0.9
	1200	7524A34G02	0.3B-1.8
	1500	7524A34G03	0.3B-1.8
	2000	7524A34G04	0.3B-1.8
	3000	7524A34G05	0.3B-1.8
	4000	7524A34G06	0.3B-1.8
	600/1200	7524A34G07	0.3B-0.5/B-1.8
	1000/2000	7524A34G08	0.3B-0.9/B-1.8
	2000/4000	7524A34G09	0.3B-1.8/B-1.8

	Primary amps	Style number	IEEE metering accuracy	No. of bars*
With primary bar	800	923A275G01	0.3B-0.9	B
	1200	923A275G02	0.3B-1.8	B
	1500	923A275G03	0.3B-1.8	C
	2000	923A275G04	0.3B-1.8	C
	3000	923A275G05	0.3B-1.8	D
	4000	923A275G06	0.3B-1.8	D
	600/1200	923A275G07	0.3B-0.5/B-1.8	B
	1000/2000	923A275G08	0.3B-0.9/B-1.8	C
	2000/4000	923A275G09	0.3B-1.8/B-1.8	D

*** Primary bar guide (in.)** - (other bar dimensions available)
Maximum current (amps) = primary amps x RF @ 30 °C

A: 1550 amps max

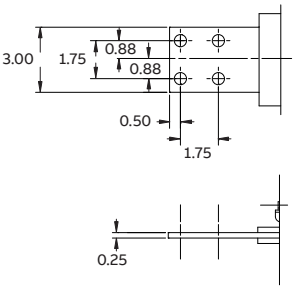

B: 2400 amps max

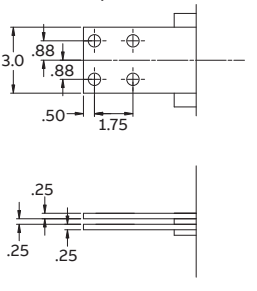

Max current available with rating factor.
Example: 1200 amps with rating factor of 2.0 = 2400 amps

Contact factory for 0.15S accuracy class

Mounting base dimensions (in.)

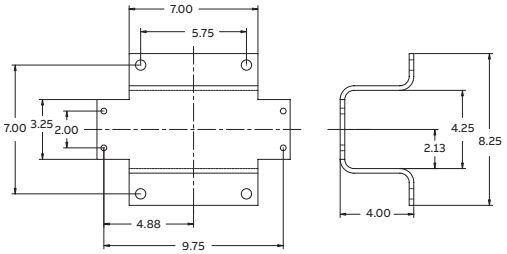

Relaying accuracy	Rating factor	Height (in.)	Width (in.)	Length (in.)	Weight (lbs.)
C100	2.0	17.25	10.50	17.75	47
C200	2.0	17.25	10.50	17.75	47
C200	2.0	17.25	10.50	17.75	47
C200	2.0	17.25	10.50	17.75	47
C200	1.5	17.25	10.50	17.75	47
C200	1.5	17.25	10.50	17.75	47
C100/C200	3.0/2.0	17.25	10.50	17.75	47
C100/C200	3.0/2.0	17.25	10.50	17.75	47
C100/C200	2.0/1.5	17.25	10.50	17.75	47

Relaying accuracy	Rating factor	Height (in.)	Width (in.)	Length (in.)	Weight (lbs.)
C100	2.0	17.25	10.50	27.12	75
C200	2.0	17.25	10.50	27.12	75
C200	2.0	17.25	10.50	27.12	75
C200	1.50	17.25	10.50	27.12	89
C200	1.33	17.25	10.50	27.12	89
C200	1.00	17.25	10.50	27.12	89
C100/C200	3.0/2.0	17.25	10.50	27.12	75
C100/C200	2.0/1.5	17.25	10.50	27.12	89
C100/C200	1.5/1.0	17.25	10.50	27.12	89

C: 3000 amps max

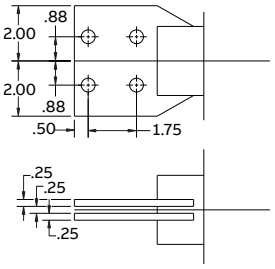

D: 4000 amps max

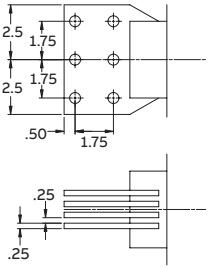

Accessories:
4-hole spade spacer 9625A38H01; 6-hole spade spacer 9625A38H02

LG-15-585

15 kV
Outdoor
110 kV BIL
60 Hertz

Tube type: 4.5" ID x 18" long

Suitable for mounting upright, underhung or cantilever with the bus running vertically. For cantilever installations with the bus running horizontally, add "-H" to the end of the style number.

Primary amps	Style number	IEEE metering accuracy
200	D030200S1 *	0.3B-0.2
300	D030300S1 *	0.3B-0.5
400	D030400S1 *	0.3B-0.9
500	D030500S1 *	0.3B-0.9
600	D030600S1 *	0.3B-1.8
800	D030800S1 *	0.3B-1.8
1000	D031000S1 *	0.3B-1.8
1200	D031200S1 *	0.3B-1.8
1500	D031500S1 *	0.3B-1.8
2000	D032000S1 *	0.3B-1.8
2500	D032500S1 *	0.3B-1.8
3000	D033000S1 *	0.3B-1.8
4000	D034000S1 *	0.3B-1.8
5000	D035000S1 *	0.3B-1.8
200/400	D030200D1 *	0.3B-0.2/0.3B-0.9
300/600	D030300D1	0.3B-0.5/0.3B-1.8
400/800	D030400D1 *	0.3B-0.9/0.3B-1.8
600/1200	D030600D1 *	0.3B-1.8/0.3B-1.8
1000/2000	D031000D1 *	0.3B-1.8/0.3B-1.8
1500/3000	D031500D1 *	0.3B-1.8/0.3B-1.8

* IC Approval AE-0703

Available in multi-ratio designs (full tap ratings same as single ratios)

Thermal rating (I_{th}): 85 x nominal for 1 second.
Mechanical rating (I_{mech}): 220 x nominal first peak.

Available with a 30.5" primary bar kit (max. 6000 A).
Change last digit of style from 1 to 3.

Mounting base dimensions (in.) [mm]

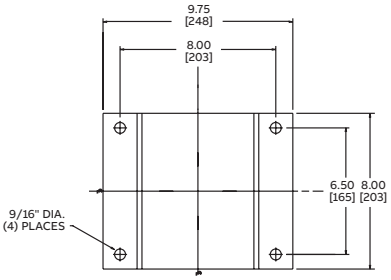

Relaying accuracy	Rating factor @ 30 °C	Height (in.)	Width (in.)	Length (in.)	Weight (lbs.)
C50	3.0	20.75	18.0	13.50	125
C100	3.0	20.75	18.0	13.50	125
C100	3.0	20.75	18.0	13.50	125
C150	3.0	20.75	18.0	13.50	125
C200	3.0	20.75	18.0	13.50	125
C300	2.0	20.75	18.0	13.50	125
C350	2.0	20.75	18.0	13.50	125
C400	2.0	20.75	18.0	13.50	125
C400	2.0	20.75	18.0	13.50	125
C600	2.0	20.75	18.0	13.50	125
C600	2.0	20.75	18.0	13.50	125
C800	1.5	20.75	18.0	13.50	125
C800	1.5	20.75	18.0	13.50	125
C800	1.5	20.75	18.0	13.50	125
C50/C100	3.0/3.0	20.75	18.0	13.50	125
C100/C200	3.0/3.0	20.75	18.0	13.50	125
C150/C300	3.0/2.0	20.75	18.0	13.50	125
C200/C400	3.0/2.0	20.75	18.0	13.50	125
C300/C600	2.0/2.0	20.75	18.0	13.50	125
C400/C800	2.0/1.5	20.75	18.0	13.50	125

LGX-15-585

15 kV
Outdoor
110 kV BIL
60 Hertz
High accuracy

Tube type: 4.5" ID x 18" long

The LGX-15-585 is part of ABB's AccuRange® current transformer portfolio of products with 0.15% accuracy from 1% of nominal current through rating factor.

Suitable for mounting upright, underhung or cantilever with the bus running vertically. For cantilever installations with the bus running horizontally, add "-H" to the end of the style number.

Primary amps	Style number	IEEE metering accuracy
200	D030200X1NC	0.15S-B0.1/0.3S-B0.2
300	D030300X1NC	0.15S-B0.5/0.3S-B0.9
400 [1]	D030400X1NC	0.15S-B0.9/0.3S-B1.8
500 [1]	D030500X1NC	0.15S-B0.9/0.3S-B1.8
600 [1]	D030600X1NC	0.15S-B0.9/0.3S-B1.8
800 [1]	D030800X1NC	0.15S-B0.9/0.3S-B1.8
1000 [1]	D031000X1NC	0.15S-B1.8
1200 [1]	D031200X1NC	0.15S-B1.8
1500 [1]	D031500X1NC	0.15S-B1.8
2000 [1]	D032000X1NC	0.15S-B1.8

[1] Accuracy is maintained from 1% rated current through its rating factor.

Accuracy is maintained from 5% rated current through its rating factor.

Thermal rating (I_{th}): 150 x nominal for 1 second.
Mechanical rating (I_{mech}): 400 x nominal first peak.

Available with a 30.5" primary bar (max. 6000 A).
Change the "1" following the X to "3".

Mounting base dimensions (in.) [mm]

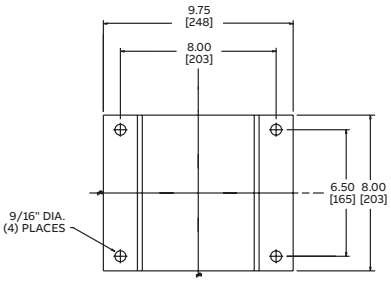

Rating factor @ 30 °C	Height (in.)	Width (in.)	Length (in.)	Weight (lbs.)
4.0	20.75	18.0	13.50	125
4.0	20.75	18.0	13.50	125
4.0	20.75	18.0	13.50	125
4.0	20.75	18.0	13.50	125
4.0	20.75	18.0	13.50	125
4.0	20.75	18.0	13.50	125
4.0	20.75	18.0	13.50	125
4.0	20.75	18.0	13.50	125
4.0	20.75	18.0	13.50	125
3.0	20.75	18.0	13.50	125

LG-15-683

15 kV
Outdoor
110 kV BIL
60 Hertz

Tube type: 4.5" ID x 22" long

Suitable for mounting
in any orientation

Primary amps	Style number	IEEE metering accuracy
200	D100200S1	0.3B-0.2
300	D100300S1	0.3B-0.2
400	D100400S1	0.3B-0.9
500	D100500S1	0.3B-1.8
600	D100600S1	0.3B-1.8
800	D100800S1	0.3B-1.8
1000	D101000S1	0.3B-1.8
1200	D101200S1	0.3B-1.8
1500	D101500S1	0.3B-1.8
2000	D102000S1*	0.3B-1.8
2500	D102500S1	0.3B-1.8
3000	D103000S1	0.3B-1.8
4000	D104000S1	0.3B-1.8
5000	D105000S1	0.3B-1.8
200/400	D100200D1	0.3B-0.2/0.3B-0.9
300/600	D100300D1	0.3B-0.2/0.3B-1.8
400/800	D100400D1	0.3B-0.9/0.3B-1.8
600/1200	D100600D1	0.3B-1.8/0.3B-1.8
1000/2000	D101000D1	0.3B-1.8/0.3B-1.8
1500/3000	D101500D1	0.3B-1.8/0.3B-1.8

* IC Approval AE-0745 for 2000:5 MR, style D102000M1

Available in multi-ratio designs (full tap ratings same as single ratios)

Thermal rating (I_{th}): 85 x nominal for 1 second.
Mechanical rating (I_{mech}): 220 x nominal first peak.

Available with a 34.5" primary bar kit (maximum 6000 A).
Change last digit of style from 1 to 3.

Mounting base dimensions (in.) [mm]

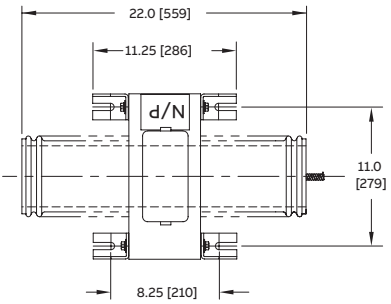

Relaying accuracy	Rating factor @ 30 °C	Height (in.)	Width (in.)	Length (in.)	Weight (lbs.)
C50	3.0	20.25	13.0	22.0	120
C100	3.0	20.25	13.0	22.0	120
C100	3.0	20.25	13.0	22.0	120
C150	3.0	20.25	13.0	22.0	120
C200	3.0	20.25	13.0	22.0	120
C250	2.0	20.25	13.0	22.0	120
C300	2.0	20.25	13.0	22.0	120
C400	2.0	20.25	13.0	22.0	120
C400	2.0	20.25	13.0	22.0	120
C400	2.0	20.25	13.0	22.0	120
C400	2.0	20.25	13.0	22.0	120
C800	2.0	20.25	13.0	22.0	120
C800	1.5	20.25	13.0	22.0	120
C800	1.5	20.25	13.0	22.0	120
C50/C100	3.0/3.0	20.25	13.0	22.0	120
C100/C200	3.0/3.0	20.25	13.0	22.0	120
C100/C200	2.0/2.0	20.25	13.0	22.0	120
C200/C400	2.0/2.0	20.25	13.0	22.0	120
C200/C400	2.0/2.0	20.25	13.0	22.0	120
C400/C800	2.0/2.0	20.25	13.0	22.0	120

LGX-15-683

15 kV
Outdoor
110 kV BIL
60 Hertz
High accuracy

Tube type: 4.5" ID x 22" long

The LGX-15-683 is part of ABB's AccuRange® current transformer portfolio of products with 0.15% accuracy from 1% of nominal current through rating factor.

Suitable for mounting in any orientation

Primary amps	Style number	IEEE metering accuracy
400	D100400X1NC	0.15S-B0.5/0.3S-B1.8
500	D100500X1NC	0.15S-B0.5/0.3S-B1.8
600	D100600X1NC	0.15S-B0.9/0.3S-B1.8
800	D100800X1NC	0.15S-B0.9/0.3S-B1.8
1000	D101000X1NC	0.15S-B1.8
1200	D101200X1NC	0.15S-B1.8
1500	D101500X1NC	0.15S-B1.8
2000	D102000X1NC	0.15S-B1.8

Thermal rating (I_{th}): 150 x nominal for 1 second.
Mechanical rating (I_{mech}): 400 x nominal first peak.

Available with a 34.5" primary bar kit (maximum 6000 A).
Change the "1" following the X to "3".

Mounting base dimensions (in.) [mm]

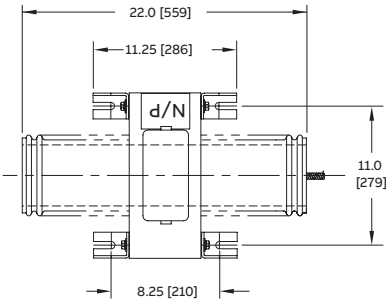

Rating factor @ 30 °C	Height (in.)	Width (in.)	Length (in.)	Weight (lbs.)
4.0	20.25	13.0	22.0	120
4.0	20.25	13.0	22.0	120
4.0	20.25	13.0	22.0	120
4.0	20.25	13.0	22.0	120
4.0	20.25	13.0	22.0	120
4.0	20.25	13.0	22.0	120
4.0	20.25	13.0	22.0	120
3.0	20.25	13.0	22.0	120

LG-15-879

15 kV
Outdoor
110 kV BIL
60 Hertz

Tube type: 4.5" ID x 18" long

Suitable for mounting upright, underhung or cantilever with the bus running vertically. For cantilever installations with the bus running horizontally, add "-H" to the end of the style number.

Contact your ABB representative for dual core design options.

Primary amps	Style number	IEEE metering accuracy
200	D092015S159-1	0.3B-0.2
300	D093015S209-1	0.3B-0.5
400	D094015S309-1	0.3B-0.9
600	D096015S409-1	0.3B-1.8
800	D098015S609-1	0.3B-1.8
1000	D091025S809-1	0.3B-1.8
1200	D091225S809-1	0.3B-1.8
1500	D091525S809-1	0.3B-1.8
2000	D092025S809-1	0.3B-1.8
2500	D092525S809-1	0.3B-1.8
3000	D093025S809-1	0.3B-1.8
4000	D094025S809-1	0.3B-1.8
5000	D095025S809-1	0.3B-1.8
6000	D096025S809-1	0.3B-1.8
8000	D098025S809-1	0.3B-1.8
10000	D091035S809-1	0.3B-1.8
200/400	D092015D159-1	0.3B-0.2/0.3B-0.9
300/600	D093015D209-1	0.3B-0.5/0.3B-1.8
400/800	D094015D309-1	0.3B-0.9/0.3B-1.8
600/1200	D096015D409-1	0.3B-1.8/0.3B-1.8
1000/2000	D091025D409-1	0.3B-1.8/0.3B-1.8
1500/3000	D091525D809-1	0.3B-1.8/0.3B-1.8

Available in multi-ratio designs (full tap ratings same as single ratio above).

Thermal rating (I_{th}): 85 x nominal for 1 second.
Mechanical rating (I_{mech}): 220 x nominal first peak.

Available with a 30.5" primary bar kit (max 6000A).
Change digit after hyphen from “1” to “3”.

Mounting base dimensions (in.) [mm]

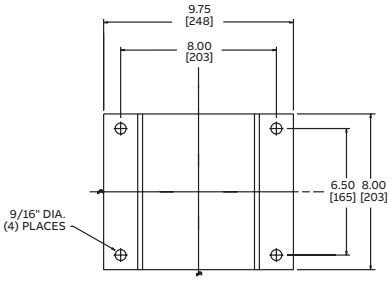

Relaying accuracy	Rating factor @ 30 °C	Height (in.)	Width (in.)	Length (in.)	Weight (lbs.)
C150	2.0	23.5	18.0	17.75	210
C200	2.0	23.5	18.0	17.75	210
C300	2.0	23.5	18.0	17.75	210
C400	2.0	23.5	18.0	17.75	210
C600	2.0	23.5	18.0	17.75	210
C800	2.0	23.5	18.0	17.75	210
C800	2.0	23.5	18.0	17.75	210
C800	2.0	23.5	18.0	17.75	210
C800	2.0	23.5	18.0	17.75	210
C800	2.0	23.5	18.0	17.75	210
C800	2.0	23.5	18.0	17.75	210
C800	1.5	23.5	18.0	17.75	210
C800	1.5	23.5	18.0	17.75	210
C800	1.5	23.5	18.0	17.75	210
C800	1.25	23.5	18.0	17.75	210
C800	1.0	23.5	18.0	17.75	210
C150/C300	2.0/2.0	23.5	18.0	17.75	210
C200/C400	2.0/2.0	23.5	18.0	17.75	210
C300/C600	2.0/2.0	23.5	18.0	17.75	210
C400/C800	2.0/2.0	23.5	18.0	17.75	210
C400/C800	2.0/2.0	23.5	18.0	17.75	210
C800/C800	2.0/2.0	23.5	18.0	17.75	210

LG-15-6513

15 kV
Outdoor
110 kV BIL
60 Hertz

Tube type: 8.75" ID x 18" long

Suitable for mounting upright, underhung or cantilever with the bus running vertically. For cantilever installations with the bus running horizontally, add "-H" to the end of the style number.

Contact your ABB representative for dual core design options.

Primary amps	Style number	IEEE metering accuracy
200	D040200S1	0.6B-0.2
300	D040300S1	0.6B-0.2
400	D040400S1	0.3B-0.5
600	D040600S1	0.3B-0.5
800	D040800S1	0.3B-0.9
1000	D041000S1	0.3B-1.8
1200	D041200S1	0.3B-1.8
1500	D041500S1	0.3B-1.8
2000	D042000S1 *	0.3B-1.8
2500	D042500S1	0.3B-1.8
3000	D043000S1 *	0.3B-1.8
4000	D044000S1	0.3B-1.8
5000	D045000S1	0.3B-1.8
6000	D046000S1 *	0.3B-1.8
8000	D048000S1	0.3B-1.8
10000	D041000S1	0.3B-1.8
200/400	D040200D1	0.6B-0.2/0.3B-0.5
300/600	D040300D1	0.6B-0.2/0.3B-0.5
400/800	D040400D1	0.3B-0.5/0.3B-0.9
600/1200	D040600D1	0.3B-0.5/0.3B-1.8
1000/2000	D041000D1	0.3B-1.8/0.3B-1.8
1500/3000	D041500D1	0.3B-1.8/0.3B-1.8
2000/4000	D042000D1 *	0.3B-1.8/0.3B-1.8
3000/6000	D043000D1 *	0.3B-1.8/0.3B-1.8

* IC Approval (AE-1104)

Available in multi-ratio designs (full tap ratings same as single ratios)

Thermal rating (I_{th}): 85 x nominal for 1 second.
Mechanical rating (I_{mech}): 220 x nominal first peak.

Mounting base dimensions (in.) [mm]

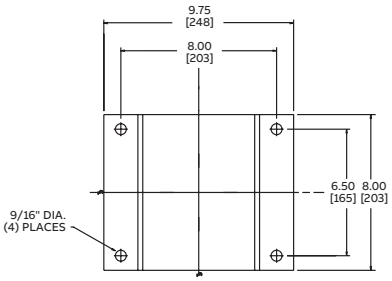

Relaying accuracy	Rating factor @ 30 °C	Height (in.)	Width (in.)	Length (in.)	Weight (lbs.)
C50	2.0	23.63	18.0	17.75	150
C75	2.0	23.63	18.0	17.75	150
C100	2.0	23.63	18.0	17.75	150
C150	2.0	23.63	18.0	17.75	150
C200	2.0	23.63	18.0	17.75	150
C250	2.0	23.63	18.0	17.75	150
C300	2.0	23.63	18.0	17.75	150
C400	2.0	23.63	18.0	17.75	150
C500	2.0	23.63	18.0	17.75	150
C600	2.0	23.63	18.0	17.75	150
C800	2.0	23.63	18.0	17.75	150
C800	1.5	23.63	18.0	17.75	150
C800	1.5	23.63	18.0	17.75	150
C800	1.0	23.63	18.0	17.75	150
C800	1.0	23.63	18.0	17.75	150
C800	1.0	23.63	18.0	17.75	150
C50/C100	2.0/2.0	23.63	18.0	17.75	150
C75/C150	2.0/2.0	23.63	18.0	17.75	150
C100/C200	2.0/2.0	23.63	18.0	17.75	150
C150/C300	2.0/2.0	23.63	18.0	17.75	150
C200/C400	2.0/2.0	23.63	18.0	17.75	150
C400/C800	2.0/2.0	23.63	18.0	17.75	150
C400/C800	2.0/1.5	23.63	18.0	17.75	150
C400/C800	1.5/1.0	23.63	18.0	17.75	150

LGX-15-6513

15 kV
Outdoor
110 kV BIL
60 Hertz
High accuracy

Tube type: 8.75" ID x 18" long

The LGX-15-6513 is part of ABB's AccuRange® current transformer portfolio of products with 0.15% accuracy from 1% of nominal current through rating factor.

Suitable for mounting upright, underhung or cantilever with the bus running vertically. For cantilever installations with the bus running horizontally, add "-H" to the end of the style number.

Primary amps	Style number	IEEE metering accuracy
400	D040400X1NC	0.15S-B0.5/0.3S-B0.9
600 [1]	D040600X1NC	0.15S-B0.9/0.3S-B1.8
800 [1]	D040800X1NC	0.15S-B0.9/0.3S-B1.8
1000 [1]	D041000X1NC	0.15S-B1.8
1200 [1]	D041200X1NC	0.15S-B1.8
1500 [1]	D041500X1NC	0.15S-B1.8
2000 [1]	D042000X1NC	0.15S-B1.8

[1] Accuracy is maintained from 1% rated current through its rating factor.

Accuracy is maintained from 5% rated current through its rating factor.

Thermal rating (I_{th}): 150 x nominal for 1 second.
Mechanical rating (I_{mech}): 400 x nominal first peak.

LGX-15-6513 not available in dual-core design.

Mounting base dimensions (in.) [mm]

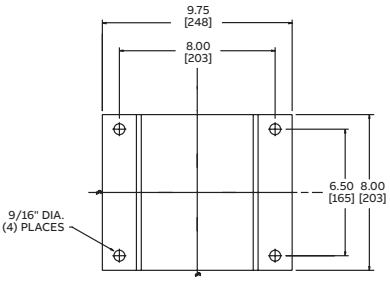

Rating factor @ 30 °C	Height (in.)	Width (in.)	Length (in.)	Weight (lbs.)
4.0	23.63	18.0	17.75	150
4.0	23.63	18.0	17.75	150
4.0	23.63	18.0	17.75	150
4.0	23.63	18.0	17.75	150
4.0	23.63	18.0	17.75	150
4.0	23.63	18.0	17.75	150
3.0	23.63	18.0	17.75	150

KOTD-110

15 kV
Outdoor
110 kV BIL
60 Hertz
Single, dual and multi-ratio

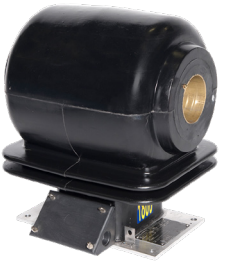

Tube type: 5" ID

Contact your ABB representative for 4" ID and for designs up to four secondaries.

	Primary amps	Style number	Rating factor
Single ratio	400	923A141G01	2.0
	600	923A141G02	2.0
	800	923A141G03	2.0
	1000	923A141G04	2.0
	1200	923A141G05	2.0
	1600	923A141G06	2.0
	2000	923A141G07	2.0
	3000	923A141G08	1.5
	4000	923A141G09	1.25
	5000	923A141G10	1.0

	Primary amps	Style number	Rating factor
AccuRange® high accuracy and extended range (1%-rating factor)	600	923A141G39NC	4.0
	1200	923A141G40NC	4.0

	Primary amps	Style number	Rating factor
Dual ratio	200/400	923A142G01	2.0/2.0
	300/600	923A142G02	2.0/2.0
	400/800	923A142G03	2.0/2.0
	500/1000	923A142G04	2.0/2.0
	600/1200	923A142G05	2.0/2.0
	800/1600	923A142G06	2.0/2.0
	1000/2000	923A142G07	2.0/2.0
	1500/3000	923A142G08	2.0/1.5
	2000/4000	923A142G09	2.0/1.25
	2500/5000	923A142G10	2.0/1.0

	Primary amps	Style number	Rating factor
Multi-ratio	600	923A143G01	2.0
	1200	923A143G02	1.5
	2000	923A143G03	1.0
	3000	923A143G04	1.33
	4000	923A143G05	1.0
	5000	923A143G06	1.0

Mounting base dimensions (in.)

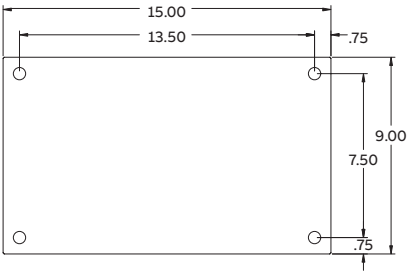

IEEE metering accuracy	Relaying accuracy	Height (in.)	Width (in.)	Length (in.)	Weight (lbs.)
0.3B-0.5	C200	20	14.7	17	225
0.3B-0.9	C200	20	14.7	17	225
0.3B-1.8	C400	20	14.7	17	225
0.3B-1.8	C400	20	14.7	17	225
0.3B-1.8	C400	20	14.7	17	225
0.3B-1.8	C400	20	14.7	17	225
0.3B-1.8	C800	20	14.7	17	225
0.3B-1.8	C800	20	14.7	17	225
0.3B-1.8	C800	20	14.7	17	225
0.3B-1.8	C800	20	14.7	17	225

IEEE metering accuracy	Relaying accuracy	Height (in.)	Width (in.)	Length (in.)	Weight (lbs.)
0.15S-B1.8	–	20	14.7	17	225
0.15S-B1.8	–	20	14.7	17	225

IEEE metering accuracy	Relaying accuracy	Height (in.)	Width (in.)	Length (in.)	Weight (lbs.)
0.6B-0.2/0.3B-0.5	C100/C200	20	14.7	17	240
0.3B-0.2/0.3B-0.9	C100/C200	20	14.7	17	240
0.3B-0.5/0.3B-1.8	C200/C400	20	14.7	17	240
0.3B-0.5/0.3B-1.8	C200/C400	20	14.7	17	240
0.3B-0.9/0.3B-1.8	C200/C400	20	14.7	17	240
0.3B-0.9/0.3B-1.8	C200/C400	20	14.7	17	240
0.3B-1.8/0.3B-1.8	C400/C800	20	14.7	17	240
0.3B-1.8/0.3B-1.8	C400/C800	20	14.7	17	240
0.3B-1.8/0.3B-1.8	C400/C800	20	14.7	17	240
0.3B-1.8/0.3B-1.8	C400/C800	20	14.7	17	240

IEEE metering accuracy	Relaying accuracy	Height (in.)	Width (in.)	Length (in.)	Weight (lbs.)
0.3B-0.9	C200	20	14.7	17	225
0.3B-1.8	C400	20	14.7	17	225
0.3B-1.8	C800	20	14.7	17	225
0.3B-1.8	C800	20	14.7	17	225
0.3B-1.8	C800	20	14.7	17	225
0.3B-1.8	C800	20	14.7	17	225

KOTD-110

15 kV
Outdoor
110 kV BIL
60 Hertz
Single, dual and multi-ratio
With primary bar

Contact your ABB representative for designs up to four secondaries.

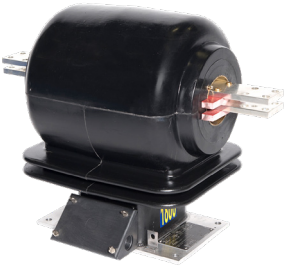

	Primary amps	Style number	No. of bars	Rating factor
Single ratio	400	923A206G01	1	2.0
	600	923A206G02	1	2.0
	800	923A206G03	1	2.0
	1000	923A206G04	1	2.0
	1200	923A206G05	1	1.5
	1600	923A206G06	1	1.25
	2000	923A206G07	1	1.0
	3000	923A206G08	2	1.33
	4000	923A206G09	2	1.0
	5000	923A206G10	3	1.0

	Primary amps	Style number	No. of bars	Rating factor
AccuRange® high accuracy and extended range (1%-rating factor)	600	923A206G39NC	1	4.0
	1200	923A206G40NC	3	4.0

	Primary amps	Style number	No. of bars	Rating factor
Dual ratio	200/400	923A148G01	1	2.0/2.0
	300/600	923A148G02	1	2.0/2.0
	400/800	923A148G03	1	2.0/2.0
	500/1000	923A148G04	1	2.0/2.0
	600/1200	923A148G05	1	2.0/1.5
	800/1600	923A148G06	1	2.0/1.25
	1000/2000	923A148G07	1	2.0/1.0
	1500/3000	923A148G08	2	2.0/1.33
	2000/4000	923A148G09	2	2.0/1.0
	2500/5000	923A148G10	3	2.0/1.0

	Primary amps	Style number	No. of bars	Rating factor
Multi-ratio	600	923A149G01	1	2.0
	1200	923A149G02	1	1.5
	2000	923A149G03	1	1.0
	3000	923A149G04	2	1.33
	4000	923A149G05	2	1.0
	5000	923A149G06	3	1.0

Bar dimensions (in.)

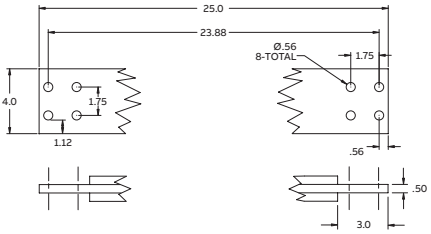

Note: Base dimensions same as tube type KOTD

IEEE metering accuracy	Relaying accuracy	Height (in.)	Width (in.)	Length (in.)	Weight (lbs.)
0.3B-0.5	C200	20	14.7	25	240
0.3B-0.9	C200	20	14.7	25	240
0.3B-1.8	C400	20	14.7	25	240
0.3B-1.8	C400	20	14.7	25	240
0.3B-1.8	C400	20	14.7	25	240
0.3B-1.8	C400	20	14.7	25	240
0.3B-1.8	C800	20	14.7	25	240
0.3B-1.8	C800	20	14.7	25	240
0.3B-1.8	C800	20	14.7	25	240
0.3B-1.8	C800	20	14.7	25	240

IEEE metering accuracy	Relaying accuracy	Height (in.)	Width (in.)	Length (in.)	Weight (lbs.)
0.15S-B1.8	–	20	14.7	17	225
0.15S-B1.8	–	20	14.7	17	225

IEEE metering accuracy	Relaying accuracy	Height (in.)	Width (in.)	Length (in.)	Weight (lbs.)
0.6B-0.2/0.3B-0.5	C100/C200	20	14.7	25	240
0.3B-0.2/0.3B-0.9	C100/C200	20	14.7	25	240
0.3B-0.5/0.3B-1.8	C200/C400	20	14.7	25	240
0.3B-0.5/0.3B-1.8	C200/C400	20	14.7	25	240
0.3B-0.9/0.3B-1.8	C200/C400	20	14.7	25	240
0.3B-0.9/0.3B-1.8	C200/C400	20	14.7	25	240
0.3B-1.8/0.3B-1.8	C400/C800	20	14.7	25	240
0.3B-1.8/0.3B-1.8	C400/C800	20	14.7	25	240
0.3B-1.8/0.3B-1.8	C400/C800	20	14.7	25	240
0.3B-1.8/0.3B-1.8	C400/C800	20	14.7	25	240

IEEE metering accuracy	Relaying accuracy	Height (in.)	Width (in.)	Length (in.)	Weight (lbs.)
0.3B-0.9	C200	20	15.3	25	240
0.3B-1.8	C400	20	15.3	25	240
0.3B-1.8	C800	20	15.3	25	240
0.3B-1.8	C800	20	15.3	25	240
0.3B-1.8	C800	20	15.3	25	240
0.3B-1.8	C800	20	15.3	25	240

KON-12ER

25 kV
Outdoor
125 kV BIL
60 Hertz

Creep:
19.5" (495 mm)

The KON-12ER is part of ABB's AccuRange® current transformer portfolio of products with 0.15% accuracy from 1% of nominal current through rating factor.

Note: This unit encapsulated with HCEP material only.

Primary amps	Style number	Thermal rating	Mechanical rating	IEEE metering accuracy
200	E-923A507G01	100	270	0.15SB-1.8
1000	E-923A507G02	60	160	0.15SB-1.8

+ Not to be used for relaying applications

KON-12

25 kV
Outdoor
125 kV BIL
60 Hertz

Creep:
19.5" (495 mm)

Note: Styles listed are encapsulated with HCEP. Contact your ABB representative for styles encapsulated with polyurethane.

Primary amps	Style number	Thermal rating	Mechanical rating	IEEE metering accuracy
5	E-7524A28G16	100	270	0.3B-0.5
10	E-7524A28G01	100	270	0.3B-0.5
15	E-7524A28G02	100	270	0.3B-0.5
20	E-7524A28G03	100	270	0.3B-0.5
25	E-7524A28G04	100	270	0.3B-0.5
30	E-7524A28G05	100	270	0.3B-0.5
40	E-7524A28G06	100	270	0.3B-0.5
50	E-7524A28G07	100	270	0.3B-0.5
75	E-7524A28G08	100	270	0.3B-0.5
100	E-7524A28G09	100	270	0.3B-0.5
150	E-7524A28G10	100	270	0.3B-0.5
200	E-7524A28G11	100	270	0.3B-0.5
300	E-7524A28G12	100	270	0.3B-0.5
400	E-7524A28G13	100	270	0.3B-0.5
600	E-7524A28G14	100	270	0.3B-0.5
800	E-7524A28G15	75	200	0.3B-0.5

Product bulletin:
1VAP429251-DB

Mounting base dimensions (in.) [mm]

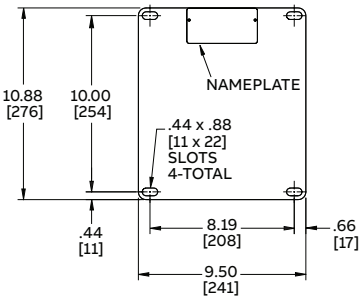

Relaying accuracy	Rating factor	Height (in.)	Width (in.)	Length (in.)	Weight (lbs.)
+	1.5	13.81	10.88	12.41	44
+	1.5	13.81	10.88	12.41	44

Product bulletin:
1VAP429252-DB

Mounting base dimensions (in.) [mm]

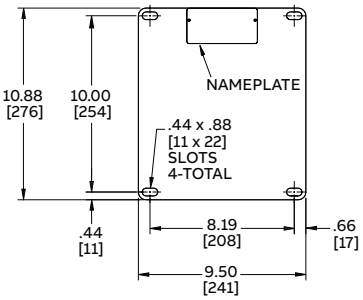

Relaying accuracy	Rating factor	Height (in.)	Width (in.)	Length (in.)	Weight (lbs.)
C40	3.0	13.81	10.88	12.41	44
C40	3.0	13.81	10.88	12.41	44
C40	3.0	13.81	10.88	12.41	44
C40	3.0	13.81	10.88	12.41	44
C40	3.0	13.81	10.88	12.41	44
C40	3.0	13.81	10.88	12.41	44
C40	3.0	13.81	10.88	12.41	44
C40	3.0	13.81	10.88	12.41	44
C40	3.0	13.81	10.88	12.41	44
C40	3.0	13.81	10.88	12.41	44
C40	3.0	13.81	10.88	12.41	44
C40	3.0	13.81	10.88	12.41	44
C40	3.0	13.81	10.88	12.41	44
C40	3.0	13.81	10.88	12.41	44
C40	2.0	13.81	10.88	12.41	44
C40	1.5	13.81	10.88	12.41	44

KOR-12

25 kV
Outdoor
125 kV BIL
60 Hertz

Creep: 20.8" (528 mm)

Mechanical rating:
5–600 amps, 150 x normal
800 amps, 110 x normal
1000 amps, 180 x normal
1200 amps, 150 x normal

Thermal rating:
5–600 amps, 100 x normal for 1 second
800 amps, 75 x normal for 1 second

Note: Styles listed are encapsulated with HCEP. Contact your ABB representative for styles encapsulated with polyurethane.

	Primary amps	Style number	IEEE metering accuracy
Single ratio	5	E-7524A15G01	0.3B-1.8
	10	E-7524A15G02	0.3B-1.8
	15	E-7524A15G03	0.3B-1.8
	20	E-7524A15G04	0.3B-1.8
	25	E-7524A15G05	0.3B-1.8
	30	E-7524A15G06	0.3B-1.8
	40	E-7524A15G07	0.3B-1.8
	50	E-7524A15G08	0.3B-1.8
	75	E-7524A15G09	0.3B-1.8
	100	E-7524A15G10	0.3B-1.8
	150	E-7524A15G11	0.3B-1.8
	200	E-7524A15G12	0.3B-1.8
	300	E-7524A15G13	0.3B-1.8
	400	E-7524A15G14	0.3B-1.8
	600	E-7524A15G15	0.3B-1.8
	800	E-7524A15G16	0.3B-1.8

	Primary amps	Style number	IEEE metering accuracy
Dual ratio	5/10	E-7524A16G01	0.3B-0.9/0.3B-1.8
	10/20	E-7524A16G02	0.3B-0.9/0.3B-1.8
	20/40	E-7524A16G03	0.3B-0.9/0.3B-1.8
	25/50	E-7524A16G04	0.3B-0.9/0.3B-1.8
	50/100	E-7524A16G05	0.3B-0.9/0.3B-1.8
	75/150	E-7524A16G06	0.3B-0.9/0.3B-1.8
	100/200	E-7524A16G07	0.3B-0.9/0.3B-1.8
	150/300	E-7524A16G08	0.3B-0.9/0.3B-1.8
	200/400	E-7524A16G09	0.3B-0.9/0.3B-1.8
	300/600	E-7524A16G10	0.3B-0.9/0.3B-1.8
	400/800	E-7524A16G11	0.3B-0.9/0.3B-1.8
	600/1200	E-7524A16G12	0.3B-0.9/0.3B-1.8

Mounting base dimensions (in.) [mm]

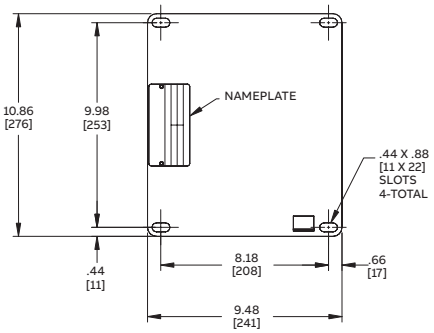

Relaying accuracy	Rating factor	Height (in.)	Width (in.)	Length (in.)	Weight (lbs.)
T200	1.5	15.75	11.0	12.48	67
T200	1.5	15.75	11.0	12.48	67
T200	1.5	15.75	11.0	12.48	67
T200	1.5	15.75	11.0	12.48	67
T200	1.5	15.75	11.0	12.48	67
T200	1.5	15.75	11.0	12.48	67
T200	1.5	15.75	11.0	12.48	67
T200	1.5	15.75	11.0	12.48	67
T200	1.5	15.75	11.0	12.48	67
T200	1.5	15.75	11.0	12.48	67
T200	1.5	15.75	11.0	12.48	67
T200	1.5	15.75	11.0	12.48	67
T200	1.5	15.75	11.0	12.48	67
T200	1.5	15.75	11.0	12.48	67
T200	1.33	15.75	11.0	12.48	67

Relaying accuracy	Rating factor	Height (in.)	Width (in.)	Length (in.)	Weight (lbs.)
T90/T200	2.0/1.5	15.75	11.0	12.48	67
T90/T200	2.0/1.5	15.75	11.0	12.48	67
T90/T200	2.0/1.5	15.75	11.0	12.48	67
T90/T200	2.0/1.5	15.75	11.0	12.48	67
T90/T200	2.0/1.5	15.75	11.0	12.48	67
T90/T200	2.0/1.5	15.75	11.0	12.48	67
T90/T200	2.0/1.5	15.75	11.0	12.48	67
T90/T200	2.0/1.5	15.75	11.0	12.48	67
T90/T200	2.0/1.5	15.75	11.0	12.48	67
T90/T200	2.0/1.5	15.75	11.0	12.48	67
T100/T200	2.0/1.5	15.75	11.0	12.48	67
T90/T200	2.0/1.5	15.75	11.0	12.48	67

KIT-15

25 kV
Indoor
150 kV BIL
60 Hertz

Mechanical rating:
2.7 x thermal rating

Thermal rating:
800 and 1200 amps: 80 x normal, 1 second
1500 amps and above: 100 x normal, 1 second

	Primary amps	Style number	IEEE metering accuracy
Tube type 3.25" ID	800	7524A45G01	0.3B-0.9
	1200	7524A45G02	0.3B-1.8
	1500	7524A45G03	0.3B-1.8
	2000	7524A45G04	0.3B-1.8
	3000	7524A45G05	0.3B-1.8
	4000	7524A45G06	0.3B-1.8
	600/1200	7524A45G07	0.3B-0.5/0.3B-1.8
	1000/2000	7524A45G08	0.3B-0.9/0.3B-1.8
	2000/4000	7524A45G09	0.3B-1.8/0.3B-1.8

	Primary amps	Style number	IEEE metering accuracy	No. of bars*
With primary bar	800	923A279G01	0.3B-0.9	B
	1200	923A279G02	0.3B-1.8	B
	1500	923A279G03	0.3B-1.8	C
	2000	923A279G04	0.3B-1.8	C
	3000	923A279G05	0.3B-1.8	D
	4000	923A279G06	0.3B-1.8	D
	600/1200	923A279G07	0.3B-0.5/0.3B-1.8	B
	1000/2000	923A279G08	0.3B-0.9/0.3B-1.8	C
	2000/4000	923A279G09	0.3B-1.8/0.3B-1.8	D

*** Primary bar guide (in.)** - (other bar dimensions available)
Maximum current (amps) = primary amps x RF @ 30 °C

A: 1550 amps max

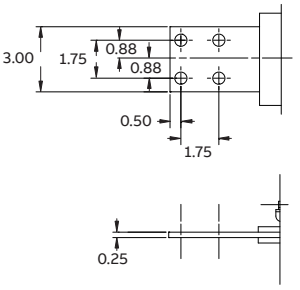

B: 2400 amps max

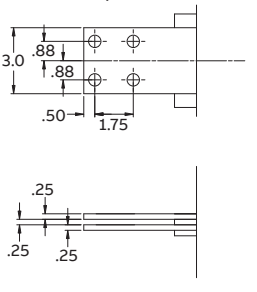

Max current available with rating factor.
Example: 1200 amps with rating factor of 2.0 = 2400 amps

Contact factory for 0.15S accuracy class

Mounting base dimensions (in.)

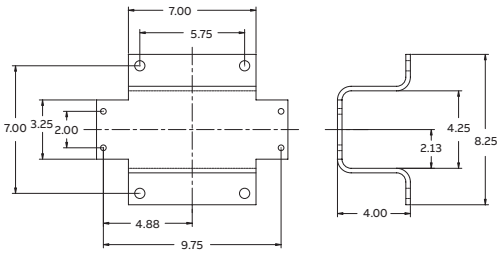

Rating factor	Relaying accuracy	Height (in.)	Width (in.)	Length (in.)	Weight (lbs.)
3.0	C100	15.37	10.50	26.75	52
2.0	C200	15.37	10.50	26.75	52
2.0	C200	15.37	10.50	26.75	52
2.0	C200	15.37	10.50	26.75	52
1.5	C200	15.37	10.50	26.75	52
1.5	C200	15.37	10.50	26.75	52
2.0	C100/C200	15.37	10.50	26.75	52
2.0	C100/C200	15.37	10.50	26.75	52
1.5	C100/C200	15.37	10.50	26.75	52

Rating factor	Relaying accuracy	Height (in.)	Width (in.)	Length (in.)	Weight (lbs.)
2.0	C100	15.38	10.50	36.12	89
2.0	C200	15.38	10.50	36.12	89
2.0	C200	15.38	10.50	36.12	89
1.5	C200	15.38	10.50	36.12	107
1.33	C200	15.38	10.50	36.12	107
1.0	C200	15.38	10.50	36.12	107
3.0/2.0	C100/C200	15.38	10.50	36.12	89
2.0/1.5	C100/C200	15.38	10.50	36.12	107
1.5/1.0	C200/C200	15.38	10.50	36.12	107

C: 3000 amps max

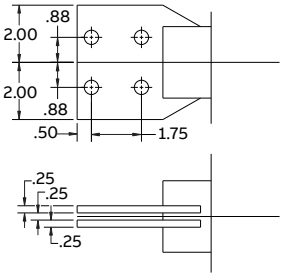

D: 4000 amps max

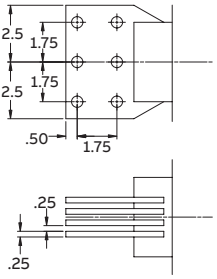

Accessories:
4-hole spade spacer 9625A38H01; 6-hole spade spacer 9625A38H02

KOT-15

25 kV
Outdoor
150 kV BIL
60 Hertz

Mechanical rating:
2.7 x thermal rating

Thermal rating:
800 and 1200 amps: 80 x normal, 1 second
1500 amps and above: 100 x normal, 1 second

	Primary amps	Style number	IEEE metering accuracy
Tube type 3.25" ID	800	7524A35G01	0.3B-0.9
	1200	7524A35G02	0.3B-1.8
	1500	7524A35G03	0.3B-1.8
	2000	7524A35G04	0.3B-1.8
	3000	7524A35G05	0.3B-1.8
	4000	7524A35G06	0.3B-1.8
	600/1200	7524A35G07	0.3B-0.5/B-1.8
	1000/2000	7524A35G08	0.3B-0.9/B-1.8
	2000/4000	7524A35G09	0.3B-1.8/B-1.8

	Primary amps	Style number	IEEE metering accuracy	No. of bars*
With primary bar	800	923A270G01	0.3B-0.9	B
	1200	923A270G02	0.3B-1.8	B
	1500	923A270G03	0.3B-1.8	C
	2000	923A270G04	0.3B-1.8	C
	3000	923A270G05	0.3B-1.8	D
	4000	923A270G06	0.3B-1.8	D
	600/1200	923A270G07	0.3B-0.5/B-1.8	B
	1000/2000	923A270G08	0.3B-0.9/B-1.8	C
	2000/4000	923A270G09	0.3B-1.8/B-1.8	D

*** Primary bar guide (in.)** - (other bar dimensions available)
Maximum current (amps) = primary amps x RF @ 30 °C

A: 1550 amps max

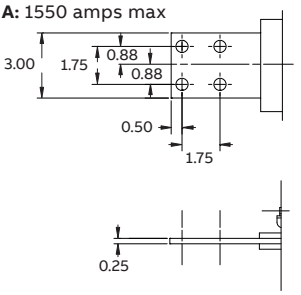

B: 2400 amps max

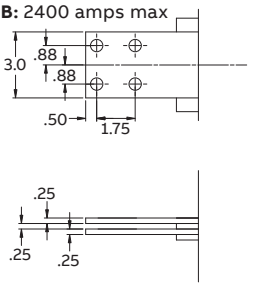

Max current available with rating factor.
Example: 1200 amps with rating factor of 2.0 = 2400 amps

Contact factory for 0.15S accuracy class

Mounting base dimensions (in.)

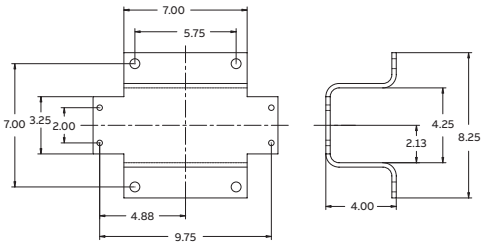

Relaying accuracy	Rating factor	Height (in.)	Width (in.)	Length (in.)	Weight (lbs.)
C100	2.0	17.25	10.50	26.75	52
C200	2.0	17.25	10.50	26.75	52
C200	2.0	17.25	10.50	26.75	52
C200	2.0	17.25	10.50	26.75	52
C200	1.5	17.25	10.50	26.75	52
C200	1.5	17.25	10.50	26.75	52
C100/C200	3.0/2.0	17.25	10.50	26.75	52
C100/C200	3.0/2.0	17.25	10.50	26.75	52
C100/C200	2.0/1.5	17.25	10.50	26.75	52

Relaying accuracy	Rating factor	Height (in.)	Width (in.)	Length (in.)	Weight (lbs.)
C100	2.0	17.25	10.50	36.12	89
C200	2.0	17.25	10.50	36.12	89
C200	2.0	17.25	10.50	36.12	89
C200	1.50	17.25	10.50	36.12	107
C200	1.33	17.25	10.50	36.12	107
C200	1.00	17.25	10.50	36.12	107
C100/C200	3.0/2.0	17.25	10.50	36.12	89
C100/C200	2.0/1.5	17.25	10.50	36.12	107
C100/C200	1.5/1.0	17.25	10.50	36.12	107

C: 3000 amps max

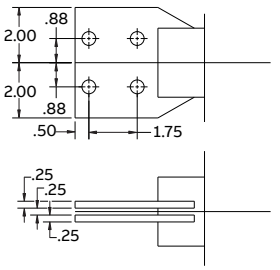

D: 4000 amps max

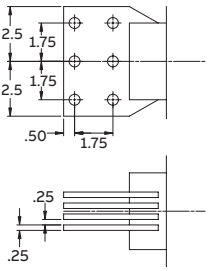

Accessories:
4-hole spade spacer 9625A38H01; 6-hole spade spacer 9625A38H02

KOR-15CER

25 kV
Outdoor
150 kV BIL
60 Hertz

Creep: 36.5" (927 mm)

The KOR-15CER is part of ABB's AccuRange® current transformer portfolio of products with 0.15% accuracy from 1% of nominal current through rating factor.

Note: This unit encapsulated with HCEP material.

Primary amps	Style number	Thermal rating	Mechanical rating	IEEE metering accuracy
200	E-923A432G01	100	290	0.15B-1.8
1000	E-923A432G02	100	290	0.15B-1.8

+ Not to be used for relaying applications

Mechanical rating:
2.7 x thermal rating

Thermal rating:
5–600 A, 100 x normal for 1 second
800 A, 75 x normal for 1 second
1000 A, 60 x normal for 1 second

Mounting base dimensions (in.) [mm]

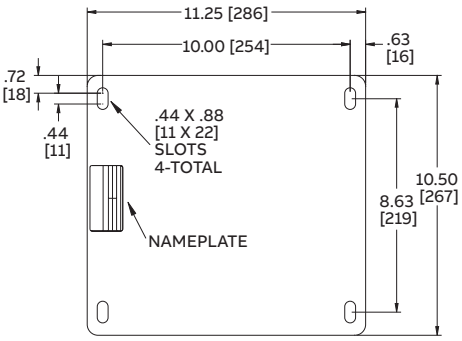

Relaying accuracy	Rating factor	Height (in.)	Width (in.)	Length (in.)	Weight (lbs.)
+	1.5	20.0	13.0	14.59	110
+	1.5	20.0	13.0	14.59	110

KOR-15C

25 kV
Outdoor
150 kV BIL
60 Hertz

Creep: 36.5" (927 mm)

Mechanical rating:
2.7 x thermal rating

Thermal rating:
5–600 A, 100 x normal for 1 second
800 A, 75 x normal for 1 second
1000 A, 60 x normal for 1 second

Note: Styles listed are encapsulated with HCEP. Contact your ABB representative for styles encapsulated with polyurethane.

	Primary amps	Style number	IEEE metering accuracy
Single ratio	5	E-923A185G01	0.3B-0.9
	10	E-923A185G02	0.3B-0.9
	15	E-923A185G03	0.3B-0.9
	20	E-923A185G04	0.3B-0.9
	25	E-923A185G05	0.3B-0.9
	30	E-923A185G06	0.3B-0.9
	40	E-923A185G07	0.3B-0.9
	50	E-923A185G08	0.3B-0.9
	75	E-923A185G09	0.3B-0.9
	100	E-923A185G10	0.3B-0.9
	150	E-923A185G11	0.3B-0.9
	200	E-923A185G12	0.3B-0.9
	300	E-923A185G13	0.3B-0.9
	400	E-923A185G14	0.3B-0.9
	500	E-923A185G15	0.3B-0.9
	600	E-923A185G16	0.3B-0.9
	800	E-923A185G17	0.3B-0.9
	1200	E-923A185G18	0.3B-0.9

Higher metering and relaying accuracies available.

	Primary amps	Style number	IEEE metering accuracy
Dual ratio	5/10	E-923A186G01	0.3B-0.9/ 0.3B-1.8
	10/20	E-923A186G02	0.3B-0.9/ 0.3B-1.8
	20/40	E-923A186G03	0.3B-0.9/ 0.3B-1.8
	25/50	E-923A186G04	0.3B-0.9/ 0.3B-1.8
	50/100	E-923A186G05	0.3B-0.9/ 0.3B-1.8
	75/150	E-923A186G06	0.3B-0.9/ 0.3B-1.8
	100/200	E-923A186G07	0.3B-0.9/ 0.3B-1.8
	150/300	E-923A186G08	0.3B-0.9/ 0.3B-1.8
	200/400	E-923A186G09	0.3B-0.9/ 0.3B-1.8
	300/600	E-923A186G10	0.3B-0.9/ 0.3B-1.8
	400/800	E-923A186G11	0.3B-0.9/ 0.3B-1.8
	600/1200	E-923A186G12	0.3B-0.9/ 0.3B-1.8

Mounting base dimensions (in.) [mm]

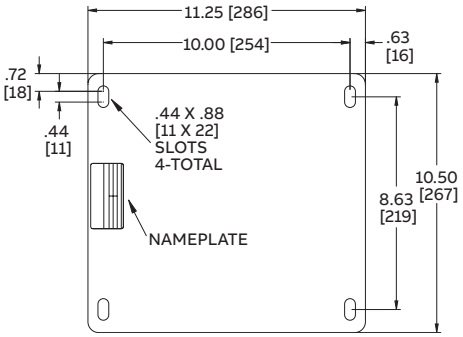

Relaying accuracy	Rating factor	Height (in.)	Width (in.)	Length (in.)	Weight (lbs.)
C100	3.0	20.0	13.0	14.59	110
C100	3.0	20.0	13.0	14.59	110
C100	3.0	20.0	13.0	14.59	110
C100	3.0	20.0	13.0	14.59	110
C100	3.0	20.0	13.0	14.59	110
C100	3.0	20.0	13.0	14.59	110
C100	3.0	20.0	13.0	14.59	110
C100	3.0	20.0	13.0	14.59	110
C100	3.0	20.0	13.0	14.59	110
C100	3.0	20.0	13.0	14.59	110
C100	3.0	20.0	13.0	14.59	110
C100	3.0	20.0	13.0	14.59	110
C100	3.0	20.0	13.0	14.59	110
C100	3.0	20.0	13.0	14.59	110
C100	2.0	20.0	13.0	14.59	110
C100	2.0	20.0	13.0	14.59	110
C100	1.5	20.0	13.0	14.59	110
C100	1.0	20.0	13.0	14.59	110

Relaying accuracy	Rating factor	Height (in.)	Width (in.)	Length (in.)	Weight (lbs.)
C100/C200	3.0/1.5	20.0	13.0	14.59	110
C100/C200	3.0/1.5	20.0	13.0	14.59	110
C100/C200	3.0/1.5	20.0	13.0	14.59	110
C100/C200	3.0/1.5	20.0	13.0	14.59	110
C100/C200	3.0/1.5	20.0	13.0	14.59	110
C100/C200	3.0/1.5	20.0	13.0	14.59	110
C100/C200	3.0/1.5	20.0	13.0	14.59	110
C100/C200	3.0/1.5	20.0	13.0	14.59	110
C100/C200	3.0/1.5	20.0	13.0	14.59	110
C100/C200	3.0/1.5	20.0	13.0	14.59	110
C100/C200	3.0/1.5	20.0	13.0	14.59	110
C100/C200	2.0/1.0	20.0	13.0	14.59	110

KOR-15CE

25 kV
Outdoor
150 kV BIL
60 Hertz
High accuracy for metering and relaying

Creep: 36.5" (927 mm)

Mechanical rating:
2.7 x thermal rating

Thermal rating:
5–600 A, 100 x normal for 1 second
800 A, 75 x normal for 1 second
1000 A, 60 x normal for 1 second

Note: Styles listed are encapsulated with HCEP.

Primary amps	Style number	IEEE metering accuracy
5	E-923A544G01	0.15B-0.5/0.3B-1.8
10	E-923A544G02	0.15B-0.5/0.3B-1.8
15	E-923A544G03	0.15B-0.5/0.3B-1.8
20	E-923A544G04	0.15B-0.5/0.3B-1.8
25	E-923A544G05	0.15B-0.5/0.3B-1.8
30	E-923A544G06	0.15B-0.5/0.3B-1.8
40	E-923A544G07	0.15B-0.5/0.3B-1.8
50	E-923A544G08	0.15B-0.5/0.3B-1.8
75	E-923A544G09	0.15B-0.5/0.3B-1.8
100	E-923A544G10	0.15B-0.5/0.3B-1.8
150	E-923A544G11	0.15B-0.5/0.3B-1.8
200	E-923A544G12	0.15B-0.5/0.3B-1.8
300	E-923A544G13	0.15B-0.5/0.3B-1.8
400	E-923A544G14	0.15B-0.5/0.3B-1.8
500	E-923A544G15	0.15B-0.5/0.3B-1.8
600	E-923A544G16	0.15B-0.5/0.3B-1.8
800	E-923A544G17	0.15B-0.5/0.3B-1.8
1200	E-923A544G18	0.15B-0.5/0.3B-1.8

Mounting base dimensions (in.) [mm]

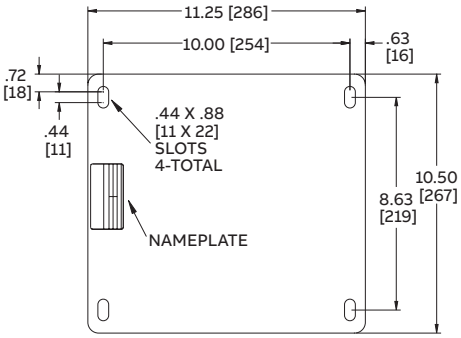

Relaying accuracy	Rating factor	Height (in.)	Width (in.)	Length (in.)	Weight (lbs.)
C200	1.5	20.0	13.0	14.59	110
C200	1.5	20.0	13.0	14.59	110
C200	1.5	20.0	13.0	14.59	110
C200	1.5	20.0	13.0	14.59	110
C200	1.5	20.0	13.0	14.59	110
C200	1.5	20.0	13.0	14.59	110
C200	1.5	20.0	13.0	14.59	110
C200	1.5	20.0	13.0	14.59	110
C200	1.5	20.0	13.0	14.59	110
C200	1.5	20.0	13.0	14.59	110
C200	1.5	20.0	13.0	14.59	110
C200	1.5	20.0	13.0	14.59	110
C200	1.5	20.0	13.0	14.59	110
C200	1.5	20.0	13.0	14.59	110
C200	1.5	20.0	13.0	14.59	110
C200	1.5	20.0	13.0	14.59	110
C200	1.5	20.0	13.0	14.59	110

KOTD-150

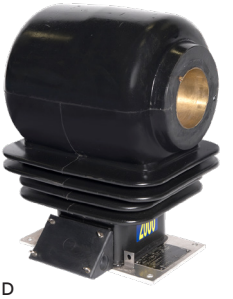

25 kV
Outdoor
110 kV BIL
Single, dual and multi-ratio
60 Hertz

Tube type: 5" ID

Contact your ABB representative for 4" ID and for designs up to four secondaries.

	Primary amps	Style number	Rating factor
Single ratio	400	923A155G01	2.0
	600	923A155G02	2.0
	800	923A155G03	2.0
	1000	923A155G04	2.0
	1200	923A155G05	2.0
	1600	923A155G06	2.0
	2000	923A155G07	2.0
	3000	923A155G08	1.5
	4000	923A155G09	1.25
	5000	923A155G10	1.0

	Primary amps	Style number	Rating factor
AccuRange® high accuracy and extended range (1%-rating factor)	600	923A155G14NC	4.0
	1200	923A155G15NC	4.0

	Primary amps	Style number	Rating factor
Dual ratio	200/400	923A156G01	2.0/2.0
	300/600	923A156G02	2.0/2.0
	400/800	923A156G03	2.0/2.0
	500/1000	923A156G04	2.0/2.0
	600/1200	923A156G05	2.0/2.0
	800/1600	923A156G06	2.0/2.0
	1000/2000	923A156G07	2.0/2.0
	1500/3000	923A156G08	2.0/1.5
	2000/4000	923A156G09	2.0/1.25
	2500/5000	923A156G10	2.0/1.0

	Primary amps	Style number	Rating factor
Multi-ratio	600	923A157G01	2.0
	1200	923A157G02	2.0
	2000	923A157G03	1.0
	3000	923A157G04	1.33
	4000	923A157G05	1.0
	5000	923A157G06	1.0

Mounting base dimensions (in.)

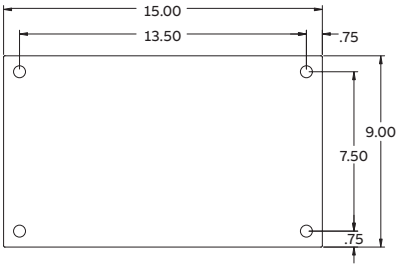

IEEE metering accuracy	Relaying accuracy	Height (in.)	Width (in.)	Length (in.)	Weight (lbs.)
0.3B-0.5	C200	22.5	14.7	17	245
0.3B-0.9	C200	22.5	14.7	17	245
0.3B-1.8	C400	22.5	14.7	17	245
0.3B-1.8	C400	22.5	14.7	17	245
0.3B-1.8	C400	22.5	14.7	17	245
0.3B-1.8	C400	22.5	14.7	17	245
0.3B-1.8	C800	22.5	14.7	17	245
0.3B-1.8	C800	22.5	14.7	17	245
0.3B-1.8	C800	22.5	14.7	17	245
0.3B-1.8	C800	22.5	14.7	17	245

IEEE metering accuracy	Relaying accuracy	Height (in.)	Width (in.)	Length (in.)	Weight (lbs.)
0.15SB-1.8	–	22.5	14.7	17	245
0.15SB-1.8	–	22.5	14.7	17	245

IEEE metering accuracy	Relaying accuracy	Height (in.)	Width (in.)	Length (in.)	Weight (lbs.)
0.6B-0.2/0.3B-0.5	C100/C200	22.5	14.7	17	245
0.3B-0.2/0.3B-0.9	C100/C200	22.5	14.7	17	245
0.3B-0.5/0.3B-1.8	C200/C400	22.5	14.7	17	245
0.3B-0.5/0.3B-1.8	C200/C400	22.5	14.7	17	245
0.3B-0.9/0.3B-1.8	C200/C400	22.5	14.7	17	245
0.3B-0.9/0.3B-1.8	C200/C400	22.5	14.7	17	245
0.3B-1.8/0.3B-1.8	C400/C800	22.5	14.7	17	245
0.3B-1.8/0.3B-1.8	C400/C800	22.5	14.7	17	245
0.3B-1.8/0.3B-1.8	C400/C800	22.5	14.7	17	245
0.3B-1.8/0.3B-1.8	C400/C800	22.5	14.7	17	245

IEEE metering accuracy	Relaying accuracy	Height (in.)	Width (in.)	Length (in.)	Weight (lbs.)
0.3B-0.9	C200	22.5	14.7	17	245
0.3B-1.8	C400	22.5	14.7	17	245
0.3B-1.8	C800	22.5	14.7	17	245
0.3B-1.8	C800	22.5	14.7	17	245
0.3B-1.8	C800	22.5	14.7	17	245
0.3B-1.8	C800	22.5	14.7	17	245

KOTD-150

25 kV
Outdoor
150 kV BIL
60 Hertz
Single, dual and multi-ratio
With primary bar

Contact your ABB representative for designs up to four secondaries.

	Primary amps	Style number	No. of bars	Rating factor
Single ratio	600	923A161G01	1	2.0
	1200	923A161G02	1	1.5
	2000	923A161G03	1	1.0
	3000	923A161G04	2	1.33
	4000	923A161G05	2	1.0
	5000	923A161G06	3	1.0
	1500	923A161G07	1	2.0
	6000	923A161G08	3	1.0
	600	923A161G09	1	2.0
	3200	923A161G10	2	1.0

	Primary amps	Style number	No. of bars	Rating factor
AccuRange® high accuracy and extended range (1%-rating factor)	600	923A161G21NC	1	4.0
	1200	923A161G22NC	3	4.0

	Primary amps	Style number	No. of bars	Rating factor
Dual ratio	200/400	923A162G01	1	2.0/2.0
	300/600	923A162G02	1	2.0/2.0
	400/800	923A162G03	1	2.0/2.0
	500/1000	923A162G04	1	2.0/2.0
	600/1200	923A162G05	1	2.0/1.5
	800/1600	923A162G06	1	2.0/1.25
	1000/2000	923A162G07	1	2.0/1.0
	1500/3000	923A162G08	2	2.0/1.33
	2000/4000	923A162G09	2	2.0/1.0
	2500/5000	923A162G10	3	2.0/1.0

	Primary amps	Style number	No. of bars	Rating factor
Multi-ratio	600	923A163G01	1	2.0
	1200	923A163G02	1	1.5
	2000	923A163G03	1	1.0
	3000	923A163G04	2	1.33
	4000	923A163G05	2	1.0
	5000	923A163G06	3	1.0

Bar dimensions (in.)

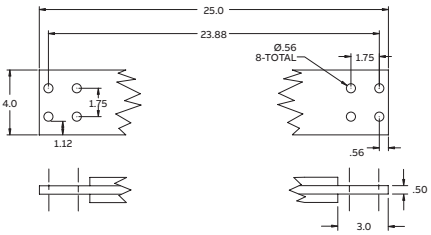

Note: Base dimensions same as tube type KOTD

IEEE metering accuracy	Relaying accuracy	Height (in.)	Width (in.)	Length (in.)	Weight (lbs.)
0.3B-0.9	C200	22.5	14.7	25	260
0.3B-1.8	C400	22.5	14.7	25	260
0.3B-1.8	C800	22.5	14.7	25	260
0.3B-1.8	C800	22.5	14.7	25	260
0.3B-1.8	C800	22.5	14.7	25	260
0.3B-1.8	C800	22.5	14.7	25	260
0.3B-1.8	C800	22.5	14.7	25	260
0.3B-1.8	C800	22.5	14.7	25	260
0.3B-0.9	C800	22.5	14.7	25	260
0.3B-1.8	C800	22.5	14.7	25	260

IEEE metering accuracy	Relaying accuracy	Height (in.)	Width (in.)	Length (in.)	Weight (lbs.)
0.15SB-1.8	–	22.5	14.7	25	245
0.15SB-1.8	–	22.5	14.7	25	245

IEEE metering accuracy	Relaying accuracy	Height (in.)	Width (in.)	Length (in.)	Weight (lbs.)
0.6B-0.2/0.3B-0.5	C100/C200	22.5	14.7	25	260
0.3B-0.2/0.3B-0.9	C100/C200	22.5	14.7	25	260
0.3B-0.5/0.3B-1.8	C200/C400	22.5	14.7	25	260
0.3B-0.5/0.3B-1.8	C200/C400	22.5	14.7	25	260
0.3B-0.9/0.3B-1.8	C200/C400	22.5	14.7	25	260
0.3B-0.9/0.3B-1.8	C200/C400	22.5	14.7	25	260
0.3B-1.8/0.3B-1.8	C400/C800	22.5	14.7	25	260
0.3B-1.8/0.3B-1.8	C400/C800	22.5	14.7	25	260
0.3B-1.8/0.3B-1.8	C400/C800	22.5	14.7	25	260
0.3B-1.8/0.3B-1.8	C400/C800	22.5	14.7	25	260

IEEE metering accuracy	Relaying accuracy	Height (in.)	Width (in.)	Length (in.)	Weight (lbs.)
0.3B-0.9	C200	22.5	14.7	25	260
0.3B-1.8	C400	22.5	14.7	25	260
0.3B-1.8	C800	22.5	14.7	25	260
0.3B-1.8	C800	22.5	14.7	25	260
0.3B-1.8	C800	22.5	14.7	25	260
0.3B-1.8	C800	22.5	14.7	25	260

LG-25-585

25 kV
Outdoor
150 kV BIL
60 Hertz

Tube type: 4.5" ID x 22" long

Suitable for mounting upright, underhung or cantilever with the bus running vertically. For cantilever installations with the bus running horizontally, add -H to the end of the style number.

Primary amps	Style number	IEEE metering accuracy
200	F030200S1 *	0.3B-0.2
300	F030300S1 *	0.3B-0.5
400	F030400S1 *	0.3B-0.9
500	F030500S1 *	0.3B-0.9
600	F030600S1 *	0.3B-1.8
800	F030800S1 *	0.3B-1.8
1000	F031000S1 *	0.3B-1.8
1200	F031200S1 *	0.3B-1.8
1500	F031500S1 *	0.3B-1.8
2000	F032000S1 *	0.3B-1.8
2500	F032500S1 *	0.3B-1.8
3000	F033000S1 *	0.3B-1.8
4000	F034000S1 *	0.3B-1.8
5000	F035000S1 *	0.3B-1.8
200/400	F030200D1 *	0.3B-0.2/0.3B-0.9
300/600	F030300D1	0.3B-0.5/0.3B-1.8
400/800	F030400D1 *	0.3B-0.9/0.3B-1.8
600/1200	F030600D1 *	0.3B-1.8/0.3B-1.8
1000/2000	F031000D1 *	0.3B-1.8/0.3B-1.8
1500/3000	F031500D1 *	0.3B-1.8/0.3B-1.8

* IC Approval AE-0703

Available in multi-ratio designs (full tap ratings same as single ratios)

Thermal rating (I_{th}): 85 x nominal for 1 second.
Mechanical rating (I_{mech}): 220 x nominal first peak.

Available with a 34.5" primary bar kit (max 6000 A).
Change last digit of style from 1 to 3.

Mounting base dimensions (in.) [mm]

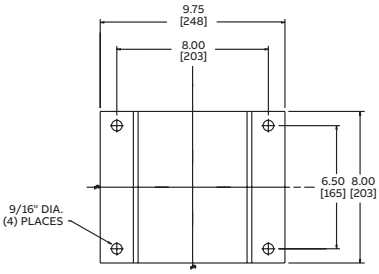

Relaying accuracy	Rating factor @ 30 °C	Height (in.)	Width (in.)	Length (in.)	Weight (lbs.)
C50	3.0	20.75	22.0	13.50	133
C100	3.0	20.75	22.0	13.50	133
C100	3.0	20.75	22.0	13.50	133
C150	3.0	20.75	22.0	13.50	133
C200	3.0	20.75	22.0	13.50	133
C300	2.0	20.75	22.0	13.50	133
C350	2.0	20.75	22.0	13.50	133
C400	2.0	20.75	22.0	13.50	133
C400	2.0	20.75	22.0	13.50	133
C600	2.0	20.75	22.0	13.50	133
C600	2.0	20.75	22.0	13.50	133
C800	1.5	20.75	22.0	13.50	133
C800	1.5	20.75	22.0	13.50	133
C800	1.5	20.75	22.0	13.50	133
C50/C100	3.0/3.0	20.75	34.5	13.50	133
C100/C200	2.0/2.0	20.75	34.5	13.50	133
C150/C300	2.0/2.0	20.75	34.5	13.50	133
C200/C400	2.0/2.0	20.75	34.5	13.50	133
C300/C600	2.0/2.0	20.75	34.5	13.50	133
C400/C800	2.0/2.0	20.75	34.5	13.50	133

LGX-25-585

25 kV
Outdoor
150 kV BIL
60 Hertz
High accuracy

Tube type: 4.5" ID x 22" long

The LGX-25-585 is part of ABB's AccuRange® current transformer portfolio of products with 0.15% accuracy from 1% of nominal current through rating factor.

Suitable for mounting upright, underhung or cantilever with the bus running vertically. For cantilever installations with the bus running horizontally, add -H to the end of the style number.

Primary amps	Style number	IEEE metering accuracy
200	F030200X1NC	0.15S-B0.1/0.3S-B0.2
300	F030300X1NC	0.15S-B0.5/0.3S-B0.9
400 [1]	F030400X1NC	0.15S-B0.9/0.3S-B1.8
500 [1]	F030500X1NC	0.15S-B0.9/0.3S-B1.8
600 [1]	F030600X1NC	0.15S-B0.9/0.3S-B1.8
800 [1]	F030800X1NC	0.15S-B0.9/0.3S-B1.8
1000 [1]	F031000X1NC	0.15S-B1.8
1200 [1]	F031200X1NC	0.15S-B1.8
1500 [1]	F031500X1NC	0.15S-B1.8
2000 [1]	F032000X1NC	0.15S-B1.8

[1] Accuracy is maintained from 1% rated current through its rating factor.

Accuracy is maintained from 5% rated current through its rating factor.

Thermal rating (I_{th}): 150 x nominal for 1 second.
Mechanical rating (I_{mech}): 400 x nominal first peak.

Available with a 34.5" primary bar kit (max 6000 A).
Change the "1" following the X to "3".

Mounting base dimensions (in.) [mm]

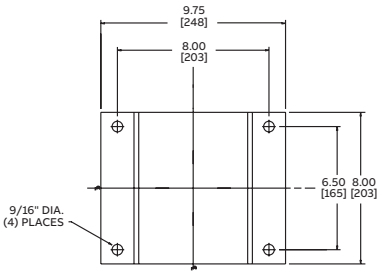

Rating factor @ 30 °C	Height (in.)	Width (in.)	Length (in.)	Weight (lbs.)
4.0	20.75	34.5	13.50	133
4.0	20.75	34.5	13.50	133
4.0	20.75	34.5	13.50	133
4.0	20.75	34.5	13.50	133
4.0	20.75	34.5	13.50	133
4.0	20.75	34.5	13.50	133
4.0	20.75	34.5	13.50	133
4.0	20.75	34.5	13.50	133
4.0	20.75	34.5	13.50	133
3.0	20.75	34.5	13.50	133

LG-25-879

25 kV
Outdoor
150 kV BIL
60 Hertz

Tube type: 4.5" ID x 22" long

Suitable for mounting upright, underhung or cantilever with the bus running vertically. For cantilever installations with the bus running horizontally, add -H to the end of the style number.

Contact your ABB representative for dual core design options.

Primary amps	Style number	IEEE metering accuracy
200	F092015S159-1	0.3B-0.2
300	F093015S209-1	0.3B-0.5
400	F094015S309-1	0.3B-0.9
600	F096015S409-1	0.3B-1.8
800	F098015S609-1	0.3B-1.8
1000	F091025S809-1	0.3B-1.8
1200	F091225S809-1	0.3B-1.8
1500	F091525S809-1	0.3B-1.8
2000	F092025S809-1	0.3B-1.8
2500	F092525S809-1	0.3B-1.8
3000	F093025S809-1	0.3B-1.8
4000	F094025S809-1	0.3B-1.8
5000	F095025S809-1	0.3B-1.8
6000	F096025S809-1	0.3B-1.8
8000	F098025S809-1	0.3B-1.8
10000	F091035S809-1	0.3B-1.8
200/400	F092015D159-1	0.3B-0.2/0.3B-0.9
300/600	F093015D209-1	0.3B-0.5/0.3B-1.8
400/800	F094015D309-1	0.3B-0.9/0.3B-1.8
600/1200	F096015D409-1	0.3B-1.8/0.3B-1.8
1000/2000	F091025D409-1	0.3B-1.8/0.3B-1.8
1500/3000	F091525D809-1	0.3B-1.8/0.3B-1.8

Available in multi-ratio designs (full tap ratings same as single ratio above).

Thermal rating (I_{th}): 85 x nominal for 1 second.
Mechanical rating (I_{mech}): 220 x nominal first peak.

Available with a 34.5" primary bar kit (max 6000 A).
Change digit after hyphen from “1” to “3”.

Mounting base dimensions (in.) [mm]

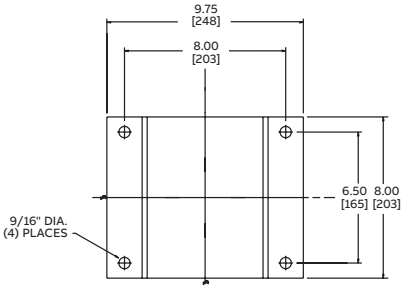

Relaying accuracy	Rating factor @ 30 °C	Height (in.)	Width (in.)	Length (in.)	Weight (lbs.)
C150	2.0	23.0	22.0	17.75	218
C200	2.0	23.0	22.0	17.75	218
C300	2.0	23.0	22.0	17.75	218
C400	2.0	23.0	22.0	17.75	218
C600	2.0	23.0	22.0	17.75	218
C800	2.0	23.0	22.0	17.75	218
C800	2.0	23.0	22.0	17.75	218
C800	2.0	23.0	22.0	17.75	218
C800	2.0	23.0	22.0	17.75	218
C800	2.0	23.0	22.0	17.75	218
C800	2.0	23.0	22.0	17.75	218
C800	1.5	23.0	22.0	17.75	218
C800	1.5	23.0	22.0	17.75	218
C800	1.5	23.0	22.0	17.75	218
C800	1.25	23.0	22.0	17.75	218
C800	1.0	23.0	22.0	17.75	218
C150/C300	2.0/2.0	23.0	22.0	17.75	218
C200/C400	2.0/2.0	23.0	22.0	17.75	218
C300/C600	2.0/2.0	23.0	22.0	17.75	218
C400/C800	2.0/2.0	23.0	22.0	17.75	218
C400/C800	2.0/2.0	23.0	22.0	17.75	218
C800/C800	2.0/2.0	23.0	22.0	17.75	218

LG-25-6513

25 kV
Outdoor
150 kV BIL
60 Hertz

Tube type: 8.75" ID x 22" long

Suitable for mounting upright, underhung or cantilever with the bus running vertically. For cantilever installations with the bus running horizontally, add -H to the end of the style number.

Contact your ABB representative for dual core design options.

Primary amps	Style number	IEEE metering accuracy
200	F040200S1	0.6B-0.2
300	F040300S1	0.6B-0.2
400	F040400S1	0.3B-0.5
600	F040600S1	0.3B-0.5
800	F040800S1	0.3B-0.9
1000	F041000S1	0.3B-1.8
1200	F041200S1	0.3B-1.8
1500	F041500S1	0.3B-1.8
2000	F042000S1 *	0.3B-1.8
2500	F042500S1	0.3B-1.8
3000	F043000S1 *	0.3B-1.8
4000	F044000S1	0.3B-1.8
5000	F045000S1	0.3B-1.8
6000	F046000S1 *	0.3B-1.8
8000	F048000S1	0.3B-1.8
10000	F0410000S1	0.3B-1.8
200/400	F040200D1	0.6B-0.2/0.3B-0.5
300/600	F040300D1	0.6B-0.2/0.3B-0.5
400/800	F040400D1	0.3B-0.5/0.3B-0.9
600/1200	F040600D1	0.3B-0.5/0.3B-1.8
1000/2000	F041000D1	0.3B-1.8/0.3B-1.8
1500/3000	F041500D1	0.3B-1.8/0.3B-1.8
2000/4000	F042000D1	0.3B-1.8/0.3B-1.8
3000/6000	F043000D1	0.3B-1.8/0.3B-1.8

* IC Approval (AE-1104)

Available in multi-ratio designs (full tap ratings same as single ratios)

Thermal rating (I_{th}): 85 x nominal for 1 second.
Mechanical rating (I_{mech}): 220 x nominal first peak.

Mounting base dimensions (in.) [mm]

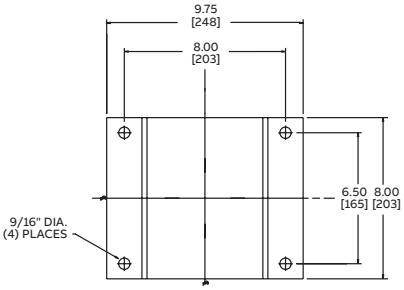

Relaying accuracy	Rating factor @ 30 °C	Height (in.)	Width (in.)	Length (in.)	Weight (lbs.)
C50	2.0	23.63	22.0	17.75	160
C75	2.0	23.63	22.0	17.75	160
C100	2.0	23.63	22.0	17.75	160
C150	2.0	23.63	22.0	17.75	160
C200	2.0	23.63	22.0	17.75	160
C250	2.0	23.63	22.0	17.75	160
C300	2.0	23.63	22.0	17.75	160
C400	2.0	23.63	22.0	17.75	160
C500	2.0	23.63	22.0	17.75	160
C600	2.0	23.63	22.0	17.75	160
C800	2.0	23.63	22.0	17.75	160
C800	1.5	23.63	22.0	17.75	160
C800	1.5	23.63	22.0	17.75	160
C800	1.0	23.63	22.0	17.75	160
C800	1.0	23.63	22.0	17.75	160
C800	1.0	23.63	22.0	17.75	160
C50/C100	2.0/2.0	23.63	22.0	17.75	160
C75/C150	2.0/2.0	23.63	22.0	17.75	160
C100/C200	2.0/2.0	23.63	22.0	17.75	160
C150/C300	2.0/2.0	23.63	22.0	17.75	160
C200/C400	2.0/2.0	23.63	22.0	17.75	160
C400/C800	2.0/2.0	23.63	22.0	17.75	160
C400/C800	2.0/1.5	23.63	22.0	17.75	160
C400/C800	1.5/1.0	23.63	22.0	17.75	160

LGX-25-6513

25 kV
Outdoor
150 kV BIL
60 Hertz
High accuracy

Tube type: 8.75" ID x 22" long

The LGX-25-6513 is part of ABB's AccuRange® current transformer portfolio of products with 0.15% accuracy from 1% of nominal current through rating factor.

Suitable for mounting upright, underhung or cantilever with the bus running vertically. For cantilever installations with the bus running horizontally, add -H to the end of the style number.

	Primary amps	Style number	IEEE metering accuracy
LGX-25-6513 High accuracy	400	F040400X1NC	0.15S-B0.5/0.3S-B0.9
	600 [1]	F040600X1NC	0.15S-B0.9/0.3S-B1.8
	800 [1]	F040800X1NC	0.15S-B0.9/0.3S-B1.8
	1000 [1]	F041000X1NC	0.15S-B1.8
	1200 [1]	F041200X1NC	0.15S-B1.8
	1500 [1]	F041500X1NC	0.15S-B1.8
	2000 [1]	F042000X1NC	0.15S-B1.8

[1] Accuracy is maintained from 1% rated current through its rating factor.

Accuracy is maintained from 5% rated current through its rating factor.

LGX-25-6513 is not available in dual-core design.

Thermal rating (I_{th}): 150 x nominal for 1 second.
Mechanical rating (I_{mech}): 400 x nominal first peak.

Mounting base dimensions (in.) [mm]

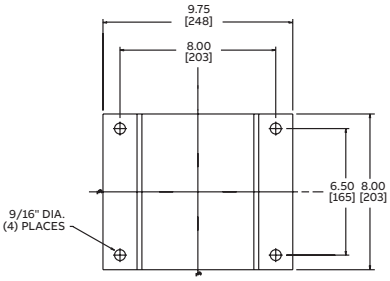

Rating factor @ 30 °C	Height (in.)	Width (in.)	Length (in.)	Weight (lbs.)
4.0	23.63	22.0	17.75	160
4.0	23.63	22.0	17.75	160
4.0	23.63	22.0	17.75	160
3.0	23.63	22.0	17.75	160
4.0	23.63	22.0	17.75	160
4.0	23.63	22.0	17.75	160
3.0	23.63	22.0	17.75	160

KOR-20ER

34.5 kV
Outdoor
200 kV BIL
60 Hertz

Creep: 36.5" (927 mm)

The KOR-20ER is part of ABB's AccuRange® current transformer portfolio of products with 0.15% accuracy from 1% of nominal current through rating factor.

Note: This unit encapsulated with HCEP material only.

Primary amps	Style number	Thermal rating	Mechanical rating	IEEE metering accuracy
200	E-923A433G01	100	290	0.15SB-1.8
1000	E-923A433G02	60	160	0.15SB-1.8

+ Not to be used for relaying applications

Mounting base dimensions (in.) [mm]

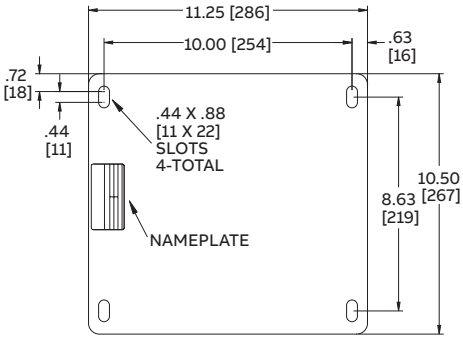

Relaying accuracy	Rating factor	Height (in.)	Width (in.)	Length (in.)	Weight (lbs.)
+	1.5	20.0	13.0	14.59	110
+	1.5	20.0	13.0	14.59	110

KOR-20

34.5 kV
Outdoor
200 kV BIL
60 Hertz

Creep: 36.5" (927 mm)

Mechanical rating:
2.7 x thermal rating

Thermal rating:
5–600 A, 100 x normal for 1 second
800 A, 75 x normal for 1 second
1200 A, 50 x normal for 1 second

Note: Styles listed are encapsulated with HCEP. Contact your ABB representative for styles encapsulated with polyurethane.

	Primary amps	Style number	IEEE metering accuracy
Single ratio	10	E-7524A22G01	0.3B-0.9
	15	E-7524A22G02	0.3B-0.9
	20	E-7524A22G03	0.3B-0.9
	25	E-7524A22G04	0.3B-0.9
	30	E-7524A22G05	0.3B-0.9
	40	E-7524A22G06	0.3B-0.9
	50	E-7524A22G07	0.3B-0.9
	75	E-7524A22G08	0.3B-0.9
	100	E-7524A22G09	0.3B-0.9
	150	E-7524A22G10	0.3B-0.9
	200	E-7524A22G11	0.3B-0.9
	300	E-7524A22G12	0.3B-0.9
	400	E-7524A22G13	0.3B-0.9
	500	E-7524A22G14	0.3B-0.9
	600	E-7524A22G15	0.3B-0.9
	800	E-7524A22G16	0.3B-0.9
	1200	E-7524A22G17	0.3B-0.9

Higher metering and relaying accuracies available.

	Primary amps	Style number	IEEE metering accuracy
Dual ratio	5/10	E-7524A21G01	0.3B-0.9/0.3B-1.8
	10/20	E-7524A21G02	0.3B-0.9/0.3B-1.8
	20/40	E-7524A21G03	0.3B-0.9/0.3B-1.8
	25/50	E-7524A21G04	0.3B-0.9/0.3B-1.8
	50/100	E-7524A21G05	0.3B-0.9/0.3B-1.8
	75/150	E-7524A21G06	0.3B-0.9/0.3B-1.8
	100/200	E-7524A21G07	0.3B-0.9/0.3B-1.8
	150/300	E-7524A21G08	0.3B-0.9/0.3B-1.8
	200/400	E-7524A21G09	0.3B-0.9/0.3B-1.8
	300/600	E-7524A21G10	0.3B-0.9/0.3B-1.8
	400/800	E-7524A21G11	0.3B-0.9/0.3B-1.8
	600/1200	E-7524A21G12	0.3B-0.9/0.3B-1.8

Mounting base dimensions (in.) [mm]

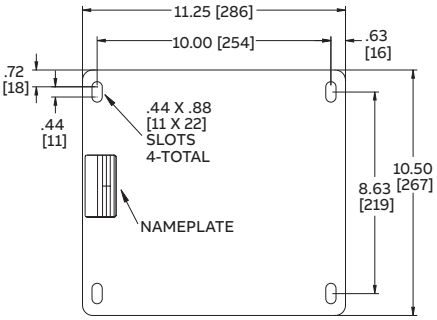

Relaying accuracy	Rating factor	Height (in.)	Width (in.)	Length (in.)	Weight (lbs.)
C100	3.0	20.0	13.0	14.59	110
C100	3.0	20.0	13.0	14.59	110
C100	3.0	20.0	13.0	14.59	110
C100	3.0	20.0	13.0	14.59	110
C100	3.0	20.0	13.0	14.59	110
C100	3.0	20.0	13.0	14.59	110
C100	3.0	20.0	13.0	14.59	110
C100	3.0	20.0	13.0	14.59	110
C100	3.0	20.0	13.0	14.59	110
C100	3.0	20.0	13.0	14.59	110
C100	3.0	20.0	13.0	14.59	110
C100	3.0	20.0	13.0	14.59	110
C100	3.0	20.0	13.0	14.59	110
C100	3.0	20.0	13.0	14.59	110
C200	1.5	20.0	13.0	14.59	110
C200	1.0	20.0	13.0	14.59	110

Relaying accuracy	Rating factor	Height (in.)	Width (in.)	Length (in.)	Weight (lbs.)
C100/C200	3.0/1.5	20.0	13.0	14.59	110
C100/C200	3.0/1.5	20.0	13.0	14.59	110
C100/C200	3.0/1.5	20.0	13.0	14.59	110
C100/C200	3.0/1.5	20.0	13.0	14.59	110
C100/C200	3.0/1.5	20.0	13.0	14.59	110
C100/C200	3.0/1.5	20.0	13.0	14.59	110
C100/C200	3.0/1.5	20.0	13.0	14.59	110
C100/C200	3.0/1.5	20.0	13.0	14.59	110
C100/C200	3.0/1.5	20.0	13.0	14.59	110
C100/C200	3.0/1.5	20.0	13.0	14.59	110
C100/C200	3.0/1.5	20.0	13.0	14.59	110
C100/C200	2.0/1.0	20.0	13.0	14.59	110

KOR-20E

34.5 kV
Outdoor
200 kV BIL
60 Hertz
High accuracy for relaying and metering

Creep: 36.5" (927 mm)

Mechanical rating:
2.7 x thermal rating

Thermal rating:
5–600 A, 100 x normal for 1 second
800 A, 75 x normal for 1 second
1200 A, 50 x normal for 1 second

Note: Only available with HCEP

	Primary amps	Style number	IEEE metering accuracy
Single ratio	10	E-923A545G01	0.15B-0.5/0.3B-1.8
	15	E-923A545G02	0.15B-0.5/0.3B-1.8
	20	E-923A545G03	0.15B-0.5/0.3B-1.8
	25	E-923A545G04	0.15B-0.5/0.3B-1.8
	30	E-923A545G05	0.15B-0.5/0.3B-1.8
	40	E-923A545G06	0.15B-0.5/0.3B-1.8
	50	E-923A545G07	0.15B-0.5/0.3B-1.8
	75	E-923A545G08	0.15B-0.5/0.3B-1.8
	100	E-923A545G09	0.15B-0.5/0.3B-1.8
	150	E-923A545G10	0.15B-0.5/0.3B-1.8
	200	E-923A545G11	0.15B-0.5/0.3B-1.8
	300	E-923A545G12	0.15B-0.5/0.3B-1.8
	400	E-923A545G13	0.15B-0.5/0.3B-1.8
	500	E-923A545G14	0.15B-0.5/0.3B-1.8
	600	E-923A545G15	0.15B-0.5/0.3B-1.8
	800	E-923A545G16	0.15B-0.5/0.3B-1.8
	1200	E-923A545G17	0.15B-0.5/0.3B-1.8

Mounting base dimensions (in.) [mm]

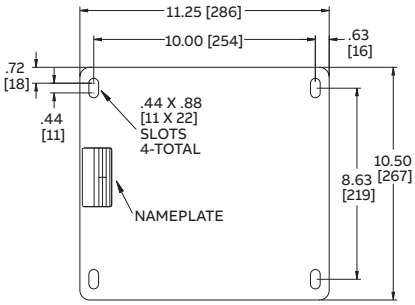

Relaying accuracy	Rating factor	Height (in.)	Width (in.)	Length (in.)	Weight (lbs.)
C200	1.5	20.0	13.0	14.59	110
C200	1.5	20.0	13.0	14.59	110
C200	1.5	20.0	13.0	14.59	110
C200	1.5	20.0	13.0	14.59	110
C200	1.5	20.0	13.0	14.59	110
C200	1.5	20.0	13.0	14.59	110
C200	1.5	20.0	13.0	14.59	110
C200	1.5	20.0	13.0	14.59	110
C200	1.5	20.0	13.0	14.59	110
C200	1.5	20.0	13.0	14.59	110
C200	1.5	20.0	13.0	14.59	110
C200	1.5	20.0	13.0	14.59	110
C200	1.5	20.0	13.0	14.59	110
C200	1.5	20.0	13.0	14.59	110
C200	1.5	20.0	13.0	14.59	110
C200	1.5	20.0	13.0	14.59	110

LG-34-879

34.5 kV
Outdoor
200 kV BIL
60 Hertz

Tube type: 4.5" ID x 30" long

Suitable for mounting upright, underhung or cantilever with the bus running vertically. For cantilever installations with the bus running horizontally, add -H to the end of the style number.

Contact your ABB representative for dual-core design options.

Primary amps	Style number	IEEE metering accuracy
200	G092015S159-1	0.3B-0.2
300	G093015S209-1	0.3B-0.5
400	G094015S309-1	0.3B-0.9
600	G096015S409-1	0.3B-1.8
800	G098015S609-1	0.3B-1.8
1000	G091025S809-1	0.3B-1.8
1200	G091225S809-1	0.3B-1.8
1500	G091525S809-1	0.3B-1.8
2000	G092025S809-1	0.3B-1.8
2500	G092525S809-1	0.3B-1.8
3000	G093025S809-1	0.3B-1.8
4000	G094025S809-1	0.3B-1.8
5000	G095025S809-1	0.3B-1.8
6000	G096025S809-1	0.3B-1.8
8000	G098025S809-1	0.3B-1.8
10000	G091035S809-1	0.3B-1.8
200/400	G092015D159-1	0.3B-0.2/0.3B-0.9
300/600	G093015D209-1	0.3B-0.5/0.3B-1.8
400/800	G094015D309-1	0.3B-0.9/0.3B-1.8
600/1200	G096015D409-1	0.3B-1.8/0.3B-1.8
1000/2000	G091025D409-1	0.3B-1.8/0.3B-1.8
1500/3000	G091525D809-1	0.3B-1.8/0.3B-1.8

Available in multi-ratio designs (full tap ratings same as single ratio above).

Thermal rating (I_{th}): 85 x nominal for 1 second.
Mechanical rating (I_{mech}): 220 x nominal first peak.

Available with a 43.5" primary bar kit (max 6000 A).
Change the “1” following the hyphen to “3”.

Mounting base dimensions (in.) [mm]

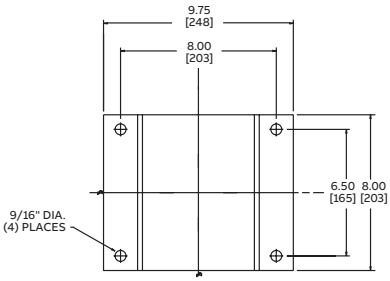

Relaying accuracy	Rating factor @ 30 °C	Height (in.)	Width (in.)	Length (in.)	Weight (lbs)
C150	2.0	25.38	30.0	17.75	232
C200	2.0	25.38	30.0	17.75	232
C300	2.0	25.38	30.0	17.75	232
C400	2.0	25.38	30.0	17.75	232
C600	2.0	25.38	30.0	17.75	232
C800	2.0	25.38	30.0	17.75	232
C800	2.0	25.38	30.0	17.75	232
C800	2.0	25.38	30.0	17.75	232
C800	2.0	25.38	30.0	17.75	232
C800	2.0	25.38	30.0	17.75	232
C800	2.0	25.38	30.0	17.75	232
C800	1.5	25.38	30.0	17.75	232
C800	1.5	25.38	30.0	17.75	232
C800	1.5	25.38	30.0	17.75	232
C800	1.25	25.38	30.0	17.75	232
C800	1.0	25.38	30.0	17.75	232
C150/C300	2.0/2.0	25.38	30.0	17.75	232
C200/C400	2.0/2.0	25.38	30.0	17.75	232
C300/C600	2.0/2.0	25.38	30.0	17.75	232
C400/C800	2.0/2.0	25.38	30.0	17.75	232
C400/C800	2.0/2.0	25.38	30.0	17.75	232
C800/C800	2.0/2.0	25.38	30.0	17.75	232

LGX-34-879

34.5 kV
Outdoor
200 kV BIL
60 Hertz
High accuracy

Tube type: 4.5" ID x 30" long

The LGX-34-879 is part of ABB's AccuRange® current transformer portfolio of products with 0.15% accuracy from 1% of nominal current through rating factor.

Suitable for mounting upright, underhung or cantilever with the bus running vertically. For cantilever installations with the bus running horizontally, add -H to the end of the style number.

Primary amps	Style number	IEEE metering accuracy
200	G092015X010-1NC	0.15S-B0.1/0.3S-B0.2
300	G093015X050-1NC	0.15S-B0.5/0.3S-B0.9
400 [1]	G094015X090-1NC	0.15S-B0.9/0.3S-B1.8
500 [1]	G095015X090-1NC	0.15S-B0.9/0.3S-B1.8
600 [1]	G096015X090-1NC	0.15S-B0.9/0.3S-B1.8
800 [1]	G098015X090-1NC	0.15S-B0.9/0.3S-B1.8
1000 [1]	G091025X180-1NC	0.15S-B1.8
1200 [1]	G091225X180-1NC	0.15S-B1.8
1500 [1]	G091525X180-1NC	0.15S-B1.8
2000 [1]	G092025X180-1NC	0.15S-B1.8

[1] Accuracy is maintained from 1% rated current through its rating factor.

Accuracy is maintained from 5% rated current through its rating factor.

Thermal rating (I_{th}): 150 x nominal for 1 second.
Mechanical rating (I_{mech}): 400 x nominal first peak.

Available with a 43.5" primary bar kit (max 6000 A).
Change the "1" following the hyphen to "3".

Mounting base dimensions (in.) [mm]

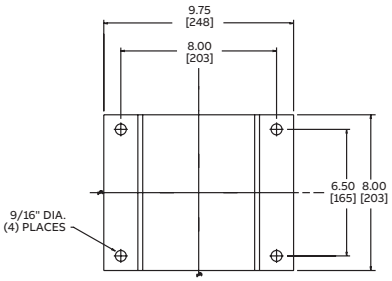

Rating factor @ 30 °C	Height (in.)	Width (in.)	Length (in.)	Weight (lbs.)
4.0	25.38	30.0	17.75	232
4.0	25.38	30.0	17.75	232
4.0	25.38	30.0	17.75	232
4.0	25.38	30.0	17.75	232
4.0	25.38	30.0	17.75	232
4.0	25.38	30.0	17.75	232
4.0	25.38	30.0	17.75	232
4.0	25.38	30.0	17.75	232
4.0	25.38	30.0	17.75	232
3.0	25.38	30.0	17.75	232

KOTD-200

34.5 kV
Outdoor
200 kV BIL
Single, dual and multi-ratio
60 Hertz

Tube type: 5" ID

Contact factory for 4" ID and designs up to four secondaries.

	Primary amps	Style number	Rating factor
Single ratio	400	923A203G01	2.0
	600	923A203G02	2.0
	800	923A203G03	2.0
	1000	923A203G04	2.0
	1200	923A203G05	1.5
	1600	923A203G06	1.25
	2000	923A203G07	1.0
	3000	923A203G08	1.33
	4000	923A203G09	1.0
	5000	923A203G10	1.0

	Primary amps	Style number	Rating factor
AccuRange® high accuracy and extended range (1%-rating factor)	600	923A203G32NC	4.0
	1200	923A203G33NC	4.0

	Primary amps	Style number	Rating factor
Dual ratio	200/400	923A170G01	2.0/2.0
	300/600	923A170G02	2.0/2.0
	400/800	923A170G03	2.0/2.0
	500/1000	923A170G04	2.0/2.0
	600/1200	923A170G05	2.0/2.0
	800/1600	923A170G06	2.0/2.0
	1000/2000	923A170G07	2.0/2.0
	1500/3000	923A170G08	2.0/1.5
	2000/4000	923A170G09	2.0/1.25
	2500/5000	923A170G10	2.0/1.0

	Primary amps	Style number	Rating factor
Multi-ratio	600	923A171G01	2.0
	1200	923A171G02	2.0
	2000	923A171G03	1.0
	3000	923A171G04	1.33
	4000	923A171G05	1.0
	5000	923A171G06	1.0

Mounting base dimensions (in.)

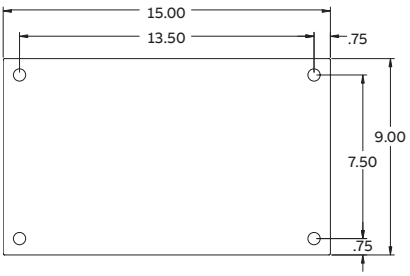

IEEE metering accuracy	Relaying accuracy	Height (in.)	Width (in.)	Length (in.)	Weight (lbs.)
0.3B-0.5	C200	25	14.7	17	260
0.3B-0.9	C200	25	14.7	17	260
0.3B-1.8	C400	25	14.7	17	260
0.3B-1.8	C400	25	14.7	17	260
0.3B-1.8	C400	25	14.7	17	260
0.3B-1.8	C400	25	14.7	17	260
0.3B-1.8	C800	25	14.7	17	260
0.3B-1.8	C800	25	14.7	17	260
0.3B-1.8	C800	25	14.7	17	260
0.3B-1.8	C800	20	14.7	17	260

IEEE metering accuracy	Relaying accuracy	Height (in.)	Width (in.)	Length (in.)	Weight (lbs.)
0.15S-B1.8	–	25	15.3	17	260
0.15S-B1.8	–	25	15.3	17	260

IEEE metering accuracy	Relaying accuracy	Height (in.)	Width (in.)	Length (in.)	Weight (lbs.)
0.6B-0.2/0.3B-0.5	C100/C200	25	14.7	17	260
0.3B-0.2/0.3B-0.9	C100/C200	25	14.7	17	260
0.3B-0.5/0.3B-1.8	C200/C400	25	14.7	17	260
0.3B-0.5/0.3B-1.8	C200/C400	25	14.7	17	260
0.3B-0.9/0.3B-1.8	C200/C400	25	14.7	17	260
0.3B-0.9/0.3B-1.8	C200/C400	25	14.7	17	260
0.3B-1.8/0.3B-1.8	C400/C800	25	14.7	17	260
0.3B-1.8/0.3B-1.8	C400/C800	25	14.7	17	260
0.3B-1.8/0.3B-1.8	C400/C800	25	14.7	17	260
0.3B-1.8/0.3B-1.8	C400/C800	25	14.7	17	260

IEEE metering accuracy	Relaying accuracy	Height (in.)	Width (in.)	Length (in.)	Weight (lbs.)
0.3B-0.9	C200	25	15.3	17	260
0.3B-1.8	C400	25	15.3	17	260
0.3B-1.8	C800	25	15.3	17	260
0.3B-1.8	C800	25	15.3	17	260
0.3B-1.8	C800	25	15.3	17	260
0.3B-1.8	C800	25	15.3	17	260

KOTD-200

34.5 kV
Outdoor
200 kV BIL
60 Hertz
Single, dual and multi-ratio
With primary bar

Contact factory for designs
up to four secondaries.

	Primary amps	Style number	No. of bars	Rating factor
Single ratio	400	923A175G01	1	2.0
	600	923A175G02	1	2.0
	800	923A175G03	1	2.0
	1000	923A175G04	1	2.0
	1200	923A175G05	1	1.5
	1600	923A175G06	1	1.25
	2000	923A175G07	1	1.0
	3000	923A175G08	2	1.33
	4000	923A175G09	2	1.0
	5000	923A175G10	3	1.0

	Primary amps	Style number	No. of bars	Rating factor
AccuRange® high accuracy and extended range (1%-rating factor)	600	923A175G44NC	1	4.0
	1200	923A175G45NC	3	4.0

	Primary amps	Style number	No. of bars	Rating factor
Dual ratio	200/400	923A176G01	1	2.0/2.0
	300/600	923A176G02	1	2.0/2.0
	400/800	923A176G03	1	2.0/2.0
	500/1000	923A176G04	1	2.0/2.0
	600/1200	923A176G05	1	2.0/1.5
	800/1600	923A176G06	1	2.0/1.25
	1000/2000	923A176G07	1	2.0/1.0
	1500/3000	923A176G08	2	2.0/1.33
	2000/4000	923A176G09	2	2.0/1.0
	2500/5000	923A176G10	3	2.0/1.0

	Primary amps	Style number	No. of bars	Rating factor
Multi-ratio	600	923A177G01	1	2.0
	1200	923A177G02	1	1.5
	2000	923A177G03	1	1.0
	3000	923A177G04	2	1.33
	4000	923A177G05	2	1.0
	5000	923A177G06	3	1.0

Bar dimensions (in.)

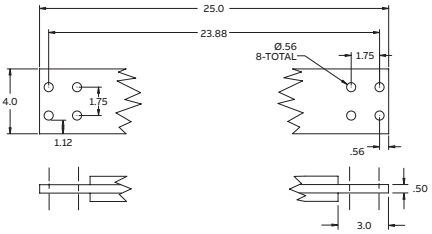

Note: Base dimensions same as tube type KOTD

IEEE metering accuracy	Relaying accuracy	Height (in.)	Width (in.)	Length (in.)	Weight (lbs.)
0.3B-0.5	C200	25	14.7	25	275
0.3B-0.9	C200	25	14.7	25	275
0.3B-1.8	C400	25	14.7	25	275
0.3B-1.8	C400	25	14.7	25	275
0.3B-1.8	C400	25	14.7	25	275
0.3B-1.8	C400	25	14.7	25	275
0.3B-1.8	C800	25	14.7	25	275
0.3B-1.8	C800	25	14.7	25	275
0.3B-1.8	C800	25	14.7	25	275
0.3B-1.8	C800	25	14.7	25	275

IEEE metering accuracy	Relaying accuracy	Height (in.)	Width (in.)	Length (in.)	Weight (lbs.)
0.15S-B1.8	–	25	14.7	25	275
0.15S-B1.8	–	25	14.7	25	275

IEEE metering accuracy	Relaying accuracy	Height (in.)	Width (in.)	Length (in.)	Weight (lbs.)
0.6B-0.2/0.3B-0.5	C100/C200	25	14.7	25	275
0.3B-0.2/0.3B-0.9	C100/C200	25	14.7	25	275
0.3B-0.5/0.3B-1.8	C200/C400	25	14.7	25	275
0.3B-0.5/0.3B-1.8	C200/C400	25	14.7	25	275
0.3B-0.9/0.3B-1.8	C200/C400	25	14.7	25	275
0.3B-0.9/0.3B-1.8	C200/C400	25	14.7	25	275
0.3B-1.8/0.3B-1.8	C400/C800	25	14.7	25	275
0.3B-1.8/0.3B-1.8	C400/C800	25	14.7	25	275
0.3B-1.8/0.3B-1.8	C400/C800	25	14.7	25	275
0.3B-1.8/0.3B-1.8	C400/C800	25	14.7	25	275

IEEE metering accuracy	Relaying accuracy	Height (in.)	Width (in.)	Length (in.)	Weight (lbs.)
0.3B-0.9	C200	25	14.7	25	275
0.3B-1.8	C400	25	14.7	25	275
0.3B-1.8	C800	25	14.7	25	275
0.3B-1.8	C800	25	14.7	25	275
0.3B-1.8	C800	25	14.7	25	275
0.3B-1.8	C800	25	14.7	25	275

VIY-60

5 kV
Indoor
60 kV BIL
60 Hertz

UL Recognized component

Thermal rating: [1]
1000 VA at 30 °C
700 VA at 55 °C

	Primary voltage	Style number	Ratio
Unfused	2400/4160Y	7525A50G01	20:1
	4200/4200Y	7525A50G02	35:1
	4800/4800Y	7525A50G03	40:1
Two fuses[5]	2400/4160Y	7525A51G01	20:1
	4200/4200Y	7525A51G02	35:1
	4800/4800Y	7525A51G03	40:1
One fuse[4 5]	2400/4160GY	7525A52G01	20:1
	4200/4200GY [2]	7525A52G02	35:1
	4800/4800GY [2]	7525A52G03	40:1
Switchgear style[3]	2400/4160Y	7525A54G01	20:1
	4200/4200Y	7525A54G02	35:1
	4800/4800Y	7525A54G03	40:1
Switchgear style[3 4]	2400/4160GY	7525A55G01	20:1
	4200/4200GY [2]	7525A55G02	35:1
	4800/4800GY [2]	7525A55G03	40:1
One fuse, non-indicating[6]	2400/4160GY [4]	9628A11G01	20:1
	4200/4200GY [4]	9628A11G02	35:1
	4800/4800GY [4]	9628A11G03	40:1
Two fuses, non-indicating[6]	2400/4160Y	9628A12G01	20:1
	4200/4200Y	9628A12G02	35:1
	4800/4800Y	9628A12G03	40:1

[1] Thermal and accuracy ratings for 120 V secondary voltage.

[2] Designed for line-to-line voltage; when connected line-to-ground, normal secondary voltage is 69.3 volts.

[3] Switchgear style is similar to fused style except fuse, fuse clips and secondary terminal cover are omitted.

[4] One fully insulated primary terminal for line-to-ground connection only.

Mounting base dimensions (in.)

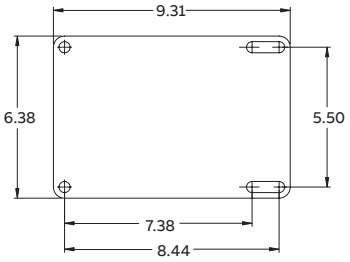

Replacement Fuses

[5]Indicating fuses, type CLE-PT, 1.0E, 4.8 kV: 50C5225G06

[6]Non-indicating fuses, type CLE-PT, 1.0E, 4.8 kV: 9626A33H03

IEEE metering accuracy [1]	Rated voltage factor (RVF)	Height (in.)	Width (in.)	Length (in.)	Weight (lbs.)
0.3W, X, M, Y	1.1	6.90	6.37	9.63	32
0.3W, X, M, Y	1.1	6.90	6.37	9.63	32
0.3W, X, M, Y	1.1	6.90	6.37	9.63	32
0.3W, X, M, Y	1.1	8.25	6.75	10.00	36
0.3W, X, M, Y	1.1	8.25	6.75	10.00	36
0.3W, X, M, Y	1.1	8.25	6.75	10.00	36
0.3W, X, M, Y	1.1	8.56	6.37	10.00	34
0.3W, X, M, Y	1.1	8.56	6.37	10.00	34
0.3W, X, M, Y	1.1	8.56	6.37	10.00	34
0.3W, X, M, Y	1.1	6.90	6.37	9.63	32
0.3W, X, M, Y	1.1	6.90	6.37	9.63	32
0.3W, X, M, Y	1.1	6.90	6.37	9.63	32
0.3W, X, M, Y	1.1	6.90	6.37	9.63	32
0.3W, X, M, Y	1.1	6.90	6.37	9.63	32
0.3W, X, M, Y	1.1	6.90	6.37	9.63	32
0.3W, X, M, Y	1.1	8.51	6.38	9.63	37
0.3W, X, M, Y	1.1	8.51	6.38	9.63	37
0.3W, X, M, Y	1.1	8.51	6.38	9.63	37
0.3W, X, M, Y	1.1	8.20	6.38	9.63	39
0.3W, X, M, Y	1.1	8.20	6.38	9.63	39
0.3W, X, M, Y	1.1	8.20	6.38	9.63	39

VOY-60

5 kV
Outdoor
60 kV BIL
60 Hertz

Creep: 15.8" (401 mm)

Thermal rating:
1000 VA @ 30 °C ambient

Note: Styles listed are encapsulated with HCEP. Contact your ABB representative for styles encapsulated with polyurethane.

Primary voltage	Ratio	Style number
2400/4160Y	20:1	E-7525A85G01
4200/4200Y	35:1	E-7525A85G02
4800/4800Y	40:1	E-7525A85G03

Mounting base dimensions (in.) [mm]

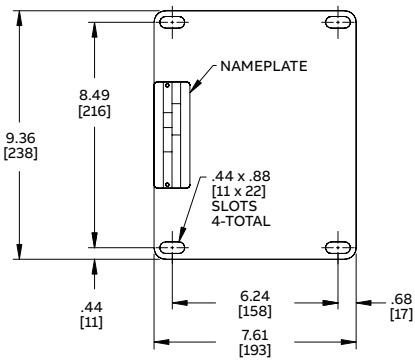

IEEE metering accuracy	Rated voltage factor (RVF)	Height (in.)	Width (in.)	Length (in.)	Weight (lbs.)
0.3W, X, M, Y	1.1	12.39	11.25	10.61	40
0.3W, X, M, Y	1.1	12.39	11.25	10.61	40
0.3W, X, M, Y	1.1	12.39	11.25	10.61	40

VIZ-75

8.7 kV
Indoor
75 kV BIL
60 Hertz

UL recognized component

Thermal rating: [1]
1500 VA at 30 °C
1000 VA at 55 °C

	Primary Voltage	Ratio	Style number	Fuse rating
Unfused	2400/4160Y	20:1	7525A66G01	–
	4200/7280Y	35:1	7525A66G02	–
	4800/8320Y	40:1	7525A66G03	–
	7200/7200Y	60:1	7525A66G04	–
One fuse[4]	2400/4160GY	20:1	7525A68G01	0.5E
	4200/7280GY	35:1	7525A68G02	0.5E
	4800/8320GY	40:1	7525A68G03	0.5E
	7200/7200GY [2]	60:1	7525A68G04	0.5E
Two fuses	2400/4160Y	20:1	7525A67G01	1E
	4200/7280Y	35:1	7525A67G02	0.5E
	4800/8320Y	40:1	7525A67G03	0.5E
	7200/7200Y	60:1	7525A67G04	0.5E
Switchgear style [3]	2400/4160Y	20:1	7525A70G01	–
	4200/7280Y	35:1	7525A70G02	–
	4800/8320Y	40:1	7525A70G03	–
	7200/7200Y	60:1	7525A70G04	–
Switchgear style [3 4]	2400/4160GY	20:1	7525A71G01	–
	4200/7280GY	35:1	7525A71G02	–
	4800/8320GY	40:1	7525A71G03	–
	7200/7200GY [2]	60:1	7525A71G04	–
Fuse clips only Four terminals	2400/4160Y	20:1	9628A17G01	–
	4200/7280Y	35:1	9628A17G02	–
	4800/8320Y	40:1	9628A17G03	–
	7200/7200Y	60:1	9628A17G04	–

[1] Thermal and accuracy ratings for 120 V secondary voltage.

[2] Designed for line-to-line voltage; when connected line-to-ground, normal secondary voltage is 69.3 volts.

[3] Switchgear style is similar to fused style except fuse, fuse clips and secondary terminal cover are omitted.

[4] One fully insulated primary terminal for line-to-ground connection only.

Mounting base dimensions (in.)

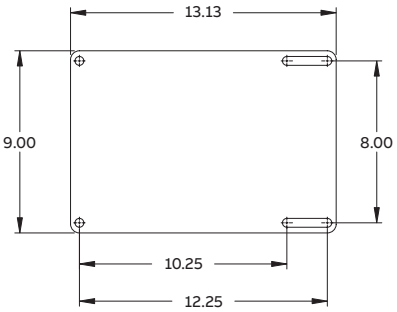

IEEE metering accuracy	Height (in.)	Width (in.)	Length (in.)	Weight (lbs.)
0.3W, X, M Y, Z	9.00	9.25	13.12	65
0.3W, X, M Y, Z	9.00	9.25	13.12	65
0.3W, X, M Y, Z	9.00	9.25	13.12	65
0.3W, X, M Y, Z	9.00	9.25	13.12	65
0.3W, X, M Y, Z	12.18	9.25	15.50	67
0.3W, X, M Y, Z	12.18	9.25	15.50	67
0.3W, X, M Y, Z	12.18	9.25	15.50	67
0.3W, X, M Y, Z	12.18	9.25	15.50	67
0.3W, X, M Y, Z	11.25	9.25	15.50	69
0.3W, X, M Y, Z	11.25	9.25	15.50	69
0.3W, X, M Y, Z	11.25	9.25	15.50	69
0.3W, X, M Y, Z	11.25	9.25	15.50	69
0.3W, X, M Y, Z	9.00	9.25	13.12	65
0.3W, X, M Y, Z	9.00	9.25	13.12	65
0.3W, X, M Y, Z	9.00	9.25	13.12	65
0.3W, X, M Y, Z	9.00	9.25	13.12	65
0.3W, X, M Y, Z	9.81	9.25	13.12	65
0.3W, X, M Y, Z	9.81	9.25	13.12	65
0.3W, X, M Y, Z	9.81	9.25	13.12	65
0.3W, X, M Y, Z	9.81	9.25	13.12	65
0.3W, X, M Y, Z	11.25	9.25	15.50	69
0.3W, X, M Y, Z	11.25	9.25	15.50	69
0.3W, X, M Y, Z	11.25	9.25	15.50	69
0.3W, X, M Y, Z	11.25	9.25	15.50	69

Accessories for line-to-line units:
Fuse kit to convert unfused VIZ-75 to fused style (two fuses and hardware): 7527A98G01

Accessories for line-to-ground units:
Fuse kit to convert unfused VIZ-75 to fused style (one fuse and hardware): 7527A98G02

Replacement fuses:
CLE-PT, 0.5E, 15.5 kV: 50C5225G03
CLE-PT, 1.0E, 15.5 kV: 50C5225G08

VIZ-75E

8.7 kV
Indoor
75 kV BIL
60 Hertz
High accuracy

Thermal rating:
1500 VA at 30 °C
1000 VA at 55 °C

	Primary Voltage	Ratio	Style number	Fuse rating
Unfused	2400/4160Y	20:1	923A126G01	–
	4160/4160Y	35:1	923A126G02	–
	4800/8320Y	40:1	923A126G03	–
	7200/7200Y	60:1	923A126G04	–
One fuse	2400/4160GY	20:1	923A246G01	0.5E
	4200/7280GY	35:1	923A246G02	0.5E
	4800/8320GY	40:1	923A246G03	0.5E
	7200/7200GY	60:1	923A246G04	0.5E
Two fuses	2400/4160Y	20:1	923A125G01	1E
	4200/7280Y	35:1	923A125G02	0.5E
	4800/8320Y	40:1	923A125G03	0.5E
	7200/7200Y	60:1	923A125G04	0.5E

Mounting base dimensions (in.)

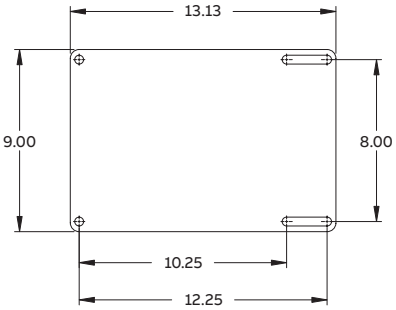

IEEE metering accuracy	Height (in.)	Width (in.)	Length (in.)	Weight (lbs.)
0.15W, X, Y	11.25	9.25	15.50	69
0.15W, X, Y	11.25	9.25	15.50	69
0.15W, X, Y	11.25	9.25	15.50	69
0.15W, X, Y	11.25	9.25	15.50	69

0.15W, X, Y	11.25	9.25	15.50	69
0.15W, X, Y	11.25	9.25	15.50	69
0.15W, X, Y	11.25	9.25	15.50	69
0.15W, X, Y	11.25	9.25	15.50	69

0.15W, X, Y	11.25	9.25	15.50	69
0.15W, X, Y	11.25	9.25	15.50	69
0.15W, X, Y	11.25	9.25	15.50	69
0.15W, X, Y	11.25	9.25	15.50	69

Accessories for line-to-line units:
Fuse kit to convert unfused VIZ-75 to fused style (two fuses and hardware): 7527A98G01

Accessories for line-to-ground units:
Fuse kit to convert unfused VIZ-75 to fused style (one fuse and hardware): 7527A98G02

Replacement fuses:
CLE-PT, 0.5E, 15.5 kV: 50C5225G03
CLE-PT, 1.0E, 15.5 kV: 50C5225G08

VOZ-75B

8.7 kV
Outdoor
75 kV BIL
60 Hertz

Strike: 13.4" (340 mm)
Creep: 30.8" (782 mm)

Minimal operating temperature:
-50 °C

Thermal rating:
1500 VA @ 30 °C ambient

Note: This unit is encapsulated with HCEP material only.

Primary voltage	Ratio	Style number
2400/4160Y	20:1	E-923A632G01
4200/7280Y	35:1	E-923A632G02
4800/8320Y	40:1	E-923A632G03
7200/7200Y	60:1	E-923A632G04

VOZ-75BE

8.7 kV
Outdoor
75 kV BIL
60 Hertz

Strike: 13.4" (340 mm)
Creep: 30.8" (782 mm)

Minimal operating temperature:
-50 °C

Thermal rating:
1500 VA @ 30 °C ambient

Note: This unit is encapsulated with HCEP material only.

Primary voltage	Ratio	Style number
2400/4160Y	20:1	E-923A642G01
4200/7280Y	35:1	E-923A642G02
4800/8320Y	40:1	E-923A642G03
7200/7200Y	60:1	E-923A642G04

Product bulletin:
1VAP429638-DB

Mounting base dimensions (in.) [mm]

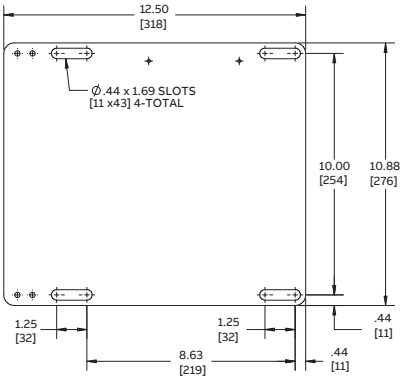

IEEE metering accuracy	Rated voltage factor (RVF)	Height (in.)	Width (in.)	Length (in.)	Weight (lbs.)
0.3Z	1.1	16.5	13.5	15.9	83
0.3Z	1.1	16.5	13.5	15.9	83
0.3Z	1.1	16.5	13.5	15.9	83
0.3Z	1.1	16.5	13.5	15.9	83

Product bulletin:
1VAP429637-DB

Mounting base dimensions (in.) [mm]

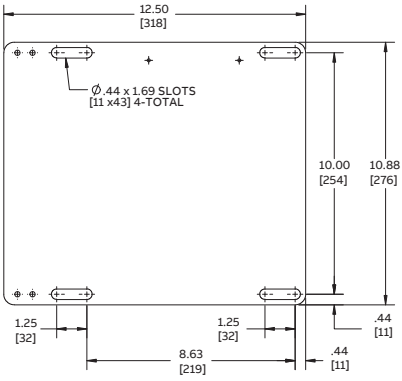

IEEE metering accuracy	Rated voltage factor (RVF)	Height (in.)	Width (in.)	Length (in.)	Weight (lbs.)
0.15Y	1.1	16.5	13.5	15.9	83
0.15Y	1.1	16.5	13.5	15.9	83
0.15Y	1.1	16.5	13.5	15.9	83
0.15Y	1.1	16.5	13.5	15.9	83

VIL-95 and VIL-95S

15 kV
Indoor
95 kV BIL
60 Hertz

UL Recognized component

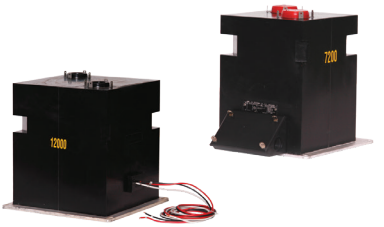

Thermal rating:
VIL-95:
1500 VA at 30 °C
1000 VA at 55 °C

VIL-95S:
750 VA at 30 °C
500 VA at 55 °C

	Primary voltage	Ratio	Style number
VIL-95 (junction box)	2400/4160Y	20:1	7881A93G01
	4200/7280Y	35:1	7881A93G02
	4800/8320Y	40:1	7881A93G03
	7200/12470Y	60:1	7881A93G04
	7620/13200Y	63.5:1	7881A93G05
	8400/14560Y	70:1	7881A93G06
	12000/12000Y	100:1	7881A93G07
	13200/13200Y	110:1	7881A93G08
	14400/14400Y	120:1	7881A93G09

	Primary voltage	Ratio	Style number
VIL-95S (cable leads)	2400/4160Y	20:1	7883A12G01
	4200/7280Y	35:1	7883A12G02
	4800/8320Y	40:1	7883A12G03
	7200/12470Y	60:1	7883A12G04
	7620/13200Y	63.5:1	7883A12G05
	8400/14560Y	70:1	7883A12G06
	12000/12000Y	100:1	7883A12G07
	7970/13800Y	66.42:1	7883A12G08
	6928/12000Y	57.73:1	7883A12G09

Mounting base dimensions (in.)

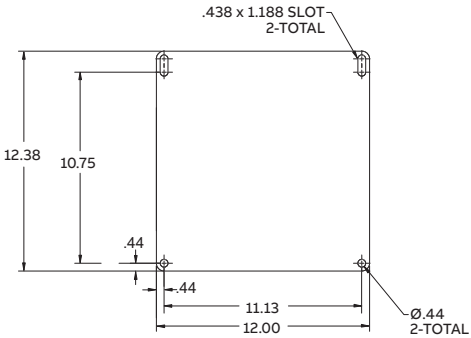

IEEE metering accuracy	Height (in.)	Width (in.)	Length (in.)	Weight (lbs.)
0.3W, X, M, Y, Z	13.94	15.55	12.0	105
0.3W, X, M, Y, Z	13.94	15.55	12.0	105
0.3W, X, M, Y, Z	13.94	15.55	12.0	105
0.3W, X, M, Y, Z	13.94	15.55	12.0	105
0.3W, X, M, Y, Z	13.94	15.55	12.0	105
0.3W, X, M, Y, Z	13.94	15.55	12.0	105
0.3W, X, M, Y, Z	13.94	15.55	12.0	105
0.3W, X, M, Y, Z	13.94	15.55	12.0	105
0.3W, X, M, Y, Z	13.94	15.55	12.0	105

IEEE metering accuracy	Height (in.)	Width (in.)	Length (in.)	Weight (lbs.)
0.3W, X, M, Y	13.94	12.38	12.0	105
0.3W, X, M, Y	13.94	12.38	12.0	105
0.3W, X, M, Y	13.94	12.38	12.0	105
0.3W, X, M, Y	13.94	12.38	12.0	105
0.3W, X, M, Y	13.94	12.38	12.0	105
0.3W, X, M, Y	13.94	12.38	12.0	105
0.3W, X, M, Y	13.94	12.38	12.0	105
0.3W, X, M, Y	13.94	12.38	12.0	105
0.3W, X, M, Y	13.94	12.38	12.0	105

VIZ-11

15 kV
Indoor
110 kV BIL
60 Hertz

UL Recognized component

Thermal rating: [1]
1500 VA at 30 °C
1000 VA at 55 °C

	Primary voltage	Ratio	Style number
Unfused	7200/12470Y	60:1	7525A66G05
	8400/14560Y	70:1	7525A66G07
	12000/12000Y	100:1	7525A66G08
	14400/14400Y	120:1	7525A66G10

Switchgear style [3 4]	7200/12470Y	60:1	7525A70G05
	8400/14560Y	70:1	7525A70G07
	12000/12000Y	100:1	7525A70G08
	14400/14400Y	120:1	7525A70G10

Switchgear style [3 4]	7200/12470GY	60:1	7525A71G05
	8400/14560GY	70:1	7525A71G07
	12000/12000GY [2]	100:1	7525A71G08
	14400/14400GY [2]	120:1	7525A71G10

Fuse clips only Four terminals	7200/12470Y	60:1	9628A17G05
	7620/13200Y	63.5:1	9628A17G06
	8400/14560Y	70:1	9628A17G07
	12000/12000Y	100:1	9628A17G08
	13200/13200Y	110:1	9628A17G09
	14400/14400Y	120:1	9628A17G10

[1] Thermal and accuracy ratings for 120 V secondary voltage.

[2] Designed for line-to-line voltage; when connected line-to-ground, normal secondary voltage is 69.3 volts.

[3] Switchgear style is similar to fused style except fuse, fuse clips and secondary terminal cover are omitted.

[4] One fully insulated primary terminal for line-to-ground connection only.

Mounting base dimensions (in.)

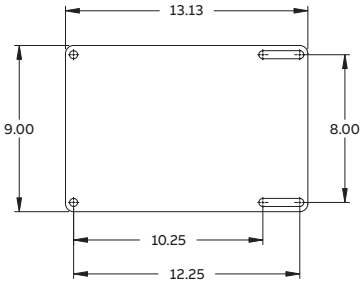

IEEE metering[1] accuracy	Height (in.)	Width (in.)	Length (in.)	Weight (lbs.)
0.3W, X, M Y, Z	9.00	9.25	13.12	65
0.3W, X, M Y, Z	9.00	9.25	13.12	65
0.3W, X, M Y, Z	9.00	9.25	13.12	65
0.3W, X, M Y, Z	9.00	9.25	13.12	65

0.3W, X, M Y, Z	9.00	9.25	13.12	65
0.3W, X, M Y, Z	9.00	9.25	13.12	65
0.3W, X, M Y, Z	9.00	9.25	13.12	65
0.3W, X, M Y, Z	9.00	9.25	13.12	65

0.3W, X, M Y, Z	9.81	9.25	13.12	65
0.3W, X, M Y, Z	9.81	9.25	13.12	65
0.3W, X, M Y, Z	9.81	9.25	13.12	65
0.3W, X, M Y, Z	9.81	9.25	13.12	65

0.3W, X, M, Y, Z	11.25	9.25	15.50	69
0.3W, X, M, Y, Z	11.25	9.25	15.50	69
0.3W, X, M, Y, Z	11.25	9.25	15.50	69
0.3W, X, M, Y, Z	11.25	9.25	15.50	69
0.3W, X, M, Y, Z	11.25	9.25	15.50	69
0.3W, X, M, Y, Z	11.25	9.25	15.50	69

Optional accessories for line-to-line units:
Fuse kit to convert unfused VIZ-11 to fused style:
(two fuses and hardware) 7527A98G01

Optional accessories for line-to-ground units:
Fuse kit to convert unfused VIZ-11 to fused style:
(one fuse and hardware) 7527A98G02

Replacement fuses:
CLE-PT, 0.5E, 15.5 kV 50C5225G03
CLE-PT, 1.0E, 15.5 kV 50C5225G08

VIZ-11 (cont'd)

15 kV
Indoor
110 kV BIL
60 Hertz

UL Recognized component

Thermal rating: [1]
1500 VA at 30 °C
1000 VA at 55 °C

	Primary voltage	Ratio	Style number	Fuse rating
Fuse clips only Two terminals	2400/4160GY	20:1	7525A65G02	–
	4200/7280GY	35:1	7525A65G03	–
	4800/8320GY	40:1	7525A65G05	–
	7200/12470GY	60:1	7525A65G13	–
	7620/13200GY	63.5:1	7525A65G16	–
	8400/14560GY	70:1	7525A65G09	–
	12000/12000GY [2]	100:1	7525A65G12	–
	13200/13200GY [2]	110:1	7525A65G15	–
	14400/14400GY [2]	120:1	7525A65G18	–
Fuse clips only Four terminals	7200/12470Y	60:1	7525A64G19	–
	7200/12470Y	70:1	7525A64G24	–
	12000/12000Y	100:1	7525A64G06	–
	13200/13200Y	110:1	7525A64G07	–
	14400/14400Y	120:1	7525A64G08	–
One fuse [3]	7200/12470GY	60:1	7525A68G05	0.5E
	8400/14560GY	70:1	7525A68G07	0.5E
	12000/12000GY [2]	100:1	7525A68G08	0.5E
	14400/14400GY [2]	120:1	7525A68G10	0.5E
Two fuses	7200/12470Y	60:1	7525A67G05	0.5E
	8400/14560Y	70:1	7525A67G07	0.5E
	12000/12000Y	100:1	7525A67G08	0.5E
	14400/14400Y	120:1	7525A67G10	0.5E

[1] Thermal and accuracy ratings for 120 V secondary voltage.

[2] Designed for line-to-line voltage; when connected line-to-ground, normal secondary voltage is 69.3 volts.

[3] One fully insulated primary terminal for line-to-ground connection only.

Mounting base dimensions (in.)

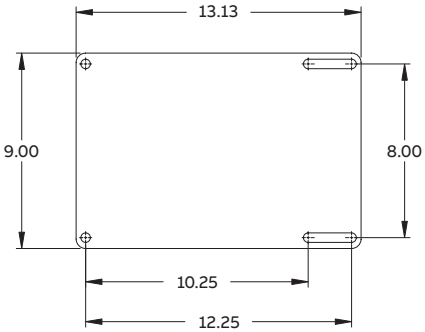

IEEE metering[1] accuracy	Height (in.)	Width (in.)	Length (in.)	Weight (lbs.)
0.3W, X, M, Y, Z	12.18	9.25	13.12	67
0.3W, X, M, Y, Z	12.18	9.25	13.12	67
0.3W, X, M, Y, Z	12.18	9.25	13.12	67
0.3W, X, M, Y, Z	12.18	9.25	13.12	67
0.3W, X, M, Y, Z	12.18	9.25	13.12	67
0.3W, X, M, Y, Z	12.18	9.25	13.12	67
0.3W, X, M, Y, Z	12.18	9.25	13.12	67
0.3W, X, M, Y, Z	12.18	9.25	13.12	67
0.3W, X, M, Y, Z	12.18	9.25	13.12	67

0.3W, X, M, Y, Z	12.18	9.25	13.12	67
0.3W, X, M, Y, Z	12.18	9.25	13.12	67
0.3W, X, M, Y, Z	12.18	9.25	13.12	67
0.3W, X, M, Y, Z	12.18	9.25	13.12	67
0.3W, X, M, Y, Z	12.18	9.25	13.12	67

0.3W, X, M Y, Z	12.18	9.25	15.50	67
0.3W, X, M Y, Z	12.18	9.25	15.50	67
0.3W, X, M Y, Z	12.18	9.25	15.50	67
0.3W, X, M Y, Z	12.18	9.25	15.50	67

0.3W, X, M Y, Z	11.25	9.25	15.50	69
0.3W, X, M Y, Z	11.25	9.25	15.50	69
0.3W, X, M Y, Z	11.25	9.25	15.50	69
0.3W, X, M Y, Z	11.25	9.25	15.50	69

Optional accessories for line-to-line units:
Fuse kit to convert unfused VIZ-11 to fused style
(two fuses and hardware): 7527A98G01

Optional accessories for line-to-ground units:
Fuse kit to convert unfused VIZ-11 to fused style
(one fuse and hardware): 7527A98G02

Replacement fuses:
CLE-PT, 0.5E, 15.5 kV 50C5225G03
CLE-PT, 1.0E, 15.5 kV 50C5225G08

VIZ-11E

15 kV
Indoor
110 kV BIL
60 Hertz
High accuracy

UL Recognized component

Thermal rating:
1500 VA at 30 °C
1000 VA at 55 °C

	Primary voltage	Ratio	Style number	Fuse rating
Unfused	7200/12470Y	60:1	923A126G05	–
	7620/13200Y	63.5:1	923A126G06	–
	8400/14560Y	70:1	923A126G07	–
	12000/12000Y	100:1	923A126G08	–
	13200/13200Y	110:1	923A126G09	–
	14400/14400Y	120:1	923A126G10	–
	13800/13800Y	115:1	923A126G11	–
One fuse	7200/12470GY	60:1	923A246G05	0.5E
	7620/12470GY	63.5:1	923A246G06	0.5E
	8400/14560GY	70:1	923A246G07	0.5E
	12000/12000GY	100:1	923A246G08	0.5E
	13200/13200GY	110:1	923A246G09	0.5E
	14400/14400GY	120:1	923A246G10	0.5E
	4200/7280GY	35:1	923A246G11	0.5E
	7200/12470GY	60:1	923A246G12	0.5E
Two fuses	7200/12470Y	60:1	923A125G05	0.5E
	7620/13200Y	63.5:1	923A125G06	0.5E
	8400/14560Y	70:1	923A125G07	0.5E
	12000/12000Y	100:1	923A125G08	0.5E
	13200/13200Y	110:1	923A125G09	0.5E
	14400/14400Y	120:1	923A125G10	0.5E

Mounting base dimensions (in.)

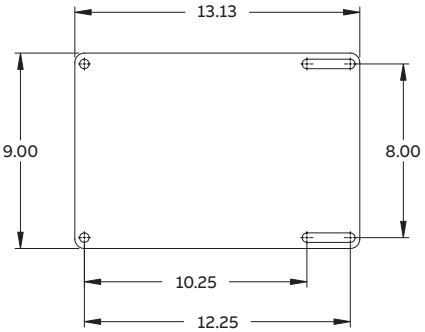

IEEE metering accuracy	Height (in.)	Width (in.)	Length (in.)	Weight (lbs.)
0.15W, X, M, Y	11.25	9.25	15.50	69
0.15W, X, M, Y	11.25	9.25	15.50	69
0.15W, X, M, Y	11.25	9.25	15.50	69
0.15W, X, M, Y	11.25	9.25	15.50	69
0.15W, X, M, Y	11.25	9.25	15.50	69
0.15W, X, M, Y	11.25	9.25	15.50	69
0.15W, X, M, Y	11.25	9.25	15.50	69

0.15W, X, M, Y	11.25	9.25	15.50	69
0.15W, X, M, Y	11.25	9.25	15.50	69
0.15W, X, M, Y	11.25	9.25	15.50	69
0.15W, X, M, Y	11.25	9.25	15.50	69
0.15W, X, M, Y	11.25	9.25	15.50	69
0.15W, X, M, Y	11.25	9.25	15.50	69
0.15W, X, M, Y	11.25	9.25	15.50	69
0.15W, X, M, Y	11.25	9.25	15.50	69

0.15W, X, M, Y	11.25	9.25	15.50	69
0.15W, X, M, Y	11.25	9.25	15.50	69
0.15W, X, M, Y	11.25	9.25	15.50	69
0.15W, X, M, Y	11.25	9.25	15.50	69
0.15W, X, M, Y	11.25	9.25	15.50	69
0.15W, X, M, Y	11.25	9.25	15.50	69

VOG-11

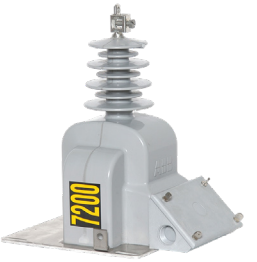

15 kV
Outdoor
110 kV BIL
60 Hertz

Creep: 24.7" (627 mm)

Thermal rating:
1000 VA @ 30 °C ambient

Note: Styles listed are encapsulated with HCEP. Contact your ABB representative for styles encapsulated with polyurethane.

Primary voltage	Ratio	Style number
7200/12470GY	60:1	E-7525A95G01
7620/13200GY	63.5:1	E-7525A95G02
8400/14560GY	70:1	E-7525A95G03

VOY-11B

15 kV
Outdoor
110 kV BIL
60 Hertz

Strike: 13.4" (340 mm)
Creep: 28.2" (716 mm)

Minimum operating temperature:
-50 °C

Thermal rating:
1500 VA @ 30 °C ambient

Note: This unit is encapsulated with HCEP material only.

Primary voltage	Ratio	Style number
7200/12470Y	60:1	E-923A658G01
7620/13200Y	63.5:1	E-923A658G02
8400/14560Y	70:1	E-923A658G03
12000/12000Y	100:1	E-923A658G04
13200/13200Y	110:1	E-923A658G05
14400/14400Y	120:1	E-923A658G06

Product bulletin:
1VAP429651-DB

Mounting base dimensions (in.) [mm]

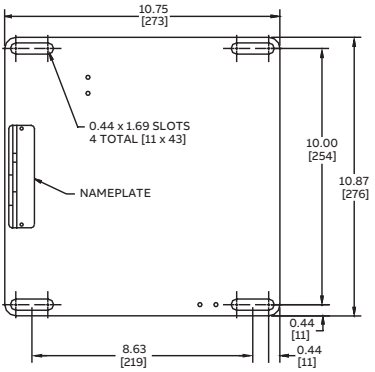

IEEE metering accuracy	Height (in.)	Width (in.)	Length (in.)	Weight (lbs.)
0.3W, X, M, Y	15.82	10.87	13.75	45
0.3W, X, M, Y	15.82	10.87	13.75	45
0.3W, X, M, Y	15.82	10.87	13.75	45

Product bulletin:
1VAP429631-DB

Mounting base dimensions (in.) [mm]

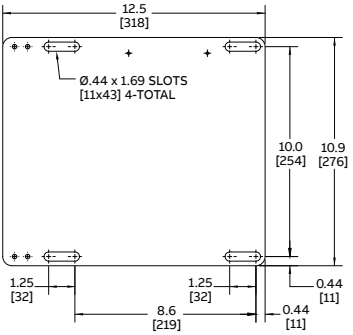

IEEE metering accuracy	Height (in.)	Width (in.)	Length (in.)	Weight (lbs.)
0.3Y	16.5	13.5	15.9	83
0.3Y	16.5	13.5	15.9	83
0.3Y	16.5	13.5	15.9	83
0.3Y	16.5	13.5	15.9	83
0.3Y	16.5	13.5	15.9	83
0.3Y	16.5	13.5	15.9	83

VOZ-11B and VOZ-11BE

15 kV
Outdoor
110 kV BIL
60 Hertz

Strike: 13.4" (340 mm)
Creep: 28.2" (716 mm)

Available with single, double and tapped secondaries

Minimum operating temperature: -50 °C

Thermal rating:
1500 VA @ 30 °C

Note: This unit is encapsulated with HCEP material only.

	Primary voltage	Ratio	Style number
VOZ-11B	7200/12470Y	60:1	E-923A632G05
	7620/13200Y	63.5:1	E-923A632G06
	8400/14560Y	70:1	E-923A632G07
	12000/12000Y	100:1	E-923A632G08
	13200/13200Y	110:1	E-923A632G09
	14400/14400Y	120:1	E-923A632G10

	Primary voltage	Ratio	Style number
VOZ-11BE	7200/12470Y	60:1	E-923A641G05
	7620/13200Y	63.5:1	E-923A641G06
	8400/14560Y	70:1	E-923A641G07
	12000/12000Y	100:1	E-923A641G08
	13200/13200Y	110:1	E-923A641G09
	14400/14400Y	120:1	E-923A641G10

Mounting base dimensions (in.) [mm]

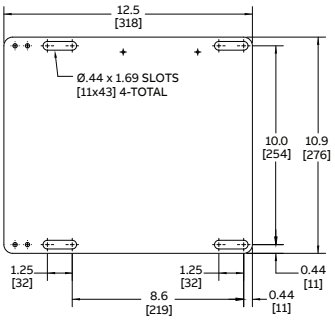

IEEE metering accuracy	Rated voltage factor (RVF)	Height (in.)	Width (in.)	Length (in.)	Weight (lbs.)
0.3Z	1.1	16.5	13.5	15.9	83
0.3Z	1.1	16.5	13.5	15.9	83
0.3Z	1.1	16.5	13.5	15.9	83
0.3Z	1.1	16.5	13.5	15.9	83
0.3Z	1.1	16.5	13.5	15.9	83
0.3Z	1.1	16.5	13.5	15.9	83

IEEE metering accuracy	Rated voltage factor (RVF)	Height (in.)	Width (in.)	Length (in.)	Weight (lbs.)
0.15Y	1.1	16.5	13.5	15.9	83
0.15Y	1.1	16.5	13.5	15.9	83
0.15Y	1.1	16.5	13.5	15.9	83
0.15Y	1.1	16.5	13.5	15.9	83
0.15Y	1.1	16.5	13.5	15.9	83
0.15Y	1.1	16.5	13.5	15.9	83

VOZ-11G

15 kV
Outdoor
110 kV BIL
60 Hertz

Strike: 12.5" (317 mm)
Creep: 28.2" (716 mm)

Minimum operating temperature:
-50 °C

Thermal rating:
1500 VA @ 30 °C ambient

Note: This unit is encapsulated with HCEP material only.

Primary voltage	Secondary voltage	Ratio	Style number
7200/12470GY	120	60:1	E-923A633G01
7620/13200GY	120	63.5:1	E-923A633G02
8400/14560GY	120	70:1	E-923A633G03
12000/12000GY	120	100:1	E-923A633G04
13200/13200GY	120	110:1	E-923A633G05
14400/14400GY	120	120:1	E-923A633G06

Mounting base dimensions (in.) [mm]

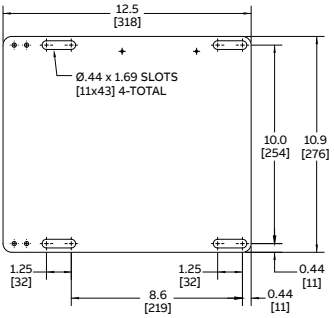

IEEE metering accuracy	Height (in.)	Width (in.)	Length (in.)	Weight (lbs.)
0.3Z	17.4	10.9	16.8	80
0.3Z	17.4	10.9	16.8	80
0.3Z	17.4	10.9	16.8	80
0.3Z	17.4	10.9	16.8	80
0.3Z	17.4	10.9	16.8	80
0.3Z	17.4	10.9	16.8	80

VIL-12 and VIL-12S

25 kV
Indoor
125 kV BIL
60 Hertz

UL Recognized component

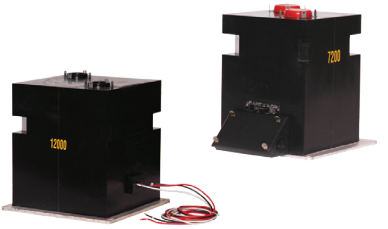

Thermal rating:
VIL-12:
1500 VA @ 30 °C
1000 VA @ 55 °C

VIL-12S:
1000 VA @ 30 °C
500 VA @ 55 °C

	Primary voltage	Ratio	Style number
VIL-12 (junction box)	7200/12470Y	60:1	923A362G01
	7620/13200Y	63.5:1	923A362G02
	8400/14560Y	70:1	923A362G03
	12000/20780Y	100:1	923A362G04
	14400/24940Y	120:1	923A362G05
	18000/18000Y	150:1	923A362G06
	24000/24000Y	200:1	923A362G07

	Primary voltage	Ratio	Style number
VIL-12S (cable leads)	7200/12470Y	60:1	923A363G01
	7620/13200Y	63.5:1	923A363G02
	8400/14560Y	70:1	923A363G03
	12000/20780Y	100:1	923A363G04
	14400/24940Y	120:1	923A363G05
	18000/18000Y	150:1	923A363G06
	24000/24000Y	200:1	923A363G07

Mounting base dimensions (in.)

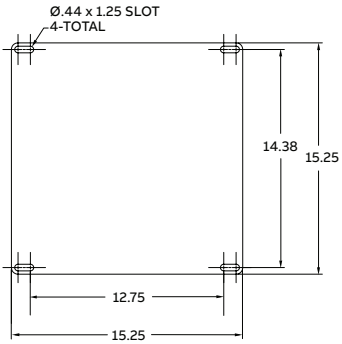

IEEE metering accuracy	Height (in.)	Width (in.)	Length (in.)	Weight (lbs.)
0.3W, X, M, Y, Z	16.00	15.25	17.75	210
0.3W, X, M, Y, Z	16.00	15.25	17.75	210
0.3W, X, M, Y, Z	16.00	15.25	17.75	210
0.3W, X, M, Y, Z	16.00	15.25	17.75	210
0.3W, X, M, Y, Z	16.00	15.25	17.75	210
0.3W, X, M, Y, Z	16.00	15.25	17.75	210
0.3W, X, M, Y, Z	16.00	15.25	17.75	210

IEEE metering accuracy	Height (in.)	Width (in.)	Length (in.)	Weight (lbs.)
0.3W, X, M, Y	16.00	15.25	15.25	210
0.3W, X, M, Y	16.00	15.25	15.25	210
0.3W, X, M, Y	16.00	15.25	15.25	210
0.3W, X, M, Y	16.00	15.25	15.25	210
0.3W, X, M, Y	16.00	15.25	15.25	210
0.3W, X, M, Y	16.00	15.25	15.25	210
0.3W, X, M, Y	16.00	15.25	15.25	210

VIZ-12

25 kV
Indoor
125 kV BIL
60 Hertz
Unfused

Thermal rating:
2000 VA @ 30 °C ambient
1500 VA @ 55 °C ambient

IEEE metering accuracy:
0.3W, X, M, Y, Z and 1.2 ZZ

Fuse kit for remote mounting: 9628A05G72
(contains two CLE-PT fuses-0.5E, 25.5 kV (style # 50C5225G04) and hardware)

Primary voltage	Ratio	Style number
18000/18000Y	150:1	9628A33G01
21000/21000Y	175:1	9628A33G02
24000/24000Y	200:1	9628A33G03

VIZ-12G

25 kV
Indoor
125 kV BIL
60 Hertz

Thermal rating:
1500 VA @ 30 °C ambient
750 VA @ 55 °C ambient

IEEE metering accuracy:
0.3W, X, M, Y, and Z

Fuse kit to convert unfused VIZ-12G to fused style: 9628A05G68
(contains one CLE-PT fuse-0.5E, 25.5 kV (style # 50C5225G04) and hardware)

	Primary voltage	Ratio	Style number	Fuse rating
Unfused	12000/20780GY	100:1	7881A72G01	–
	14400/24940GY	120:1	7881A72G02	–
	16000/27600GY	133.33:1	7881A72G03	–
	18000/18000GY	150:1	7881A72G04	–

	Primary voltage	Ratio	Style number	Fuse rating
Fused	12000/20780GY	100:1	7881A64G01	0.5E
	14400/24940GY	120:1	7881A64G02	0.5E

Product bulletin:
1VAP429762-DB

Mounting base dimensions (in.)

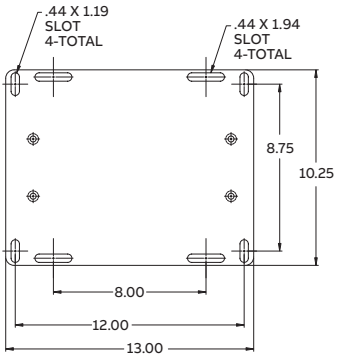

Rated voltage factor	Height (in.)	Width (in.)	Length (in.)	Weight (lbs.)
1.1	10.50	10.25	13.0	110
1.1	10.50	10.25	13.0	110
1.1	10.50	10.25	13.0	110

Product bulletin:
1VAP429762-DB

Mounting base dimensions (in.)

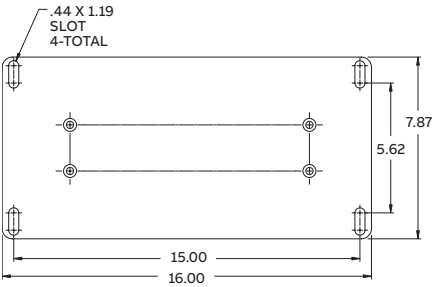

Rated voltage factor	Height (in.)	Width (in.)	Length (in.)	Weight (lbs.)
1.25	12.13	8.0	16.0	102
1.25	12.13	8.0	16.0	102
1.25	12.13	8.0	16.0	102
1.1	12.13	8.0	16.0	102

Rated voltage factor	Height (in.)	Width (in.)	Length (in.)	Weight (lbs.)
1.25	14.88	8.0	19.0	105
1.25	14.88	8.0	19.0	105

VIZ-15

25 kV
Indoor
150 kV BIL
60 Hertz
Unfused

Thermal rating:
2000 VA @ 30 °C ambient
1500 VA @ 55 °C ambient

IEEE metering accuracy:
0.3W, X, M, Y, Z and 1.2 ZZ

Fuse kit for remote mounting: 9628A05G86
(contains two CLE-PT fuses-0.5E, 25.5 kV (style # 50C5225G04) and hardware)

Primary voltage	Ratio	Style number
24940/24940Y	207.83:1	9628A34G03
24000/24000Y	200:1	9628A34G05

VIZ-15G

25 kV
Indoor
150 kV BIL
60 Hertz

Thermal rating:
2000 VA @ 30 °C ambient
1500 VA @ 55 °C ambient

IEEE metering accuracy:
0.3W, X, M, Y, and Z

Fuse kit to convert unfused VIZ-15G to fused style: 9628A05G89
(contains one CLE-PT fuse-0.5E, 25.5 kV (style # 50C5225G04) and hardware)

	Primary voltage	Ratio	Style number	Fuse rating
Unfused	12000/20780GY	100:1	9629A81G01	–
	14400/24940GY	120:1	9629A81G02	–
	19920/34500GY	166:1	9629A81G03	–
	24000/24000GY	200:1	9629A81G04	–

	Primary voltage	Ratio	Style number	Fuse rating
Fused	12000/20780GY	100:1	9629A82G01	0.5E
	14400/24940GY	120:1	9629A82G02	0.5E
	16100/27900GY	140:1	9629A82G03	0.5E
	24000/24000GY	200:1	9629A82G04	0.5E

Mounting base dimensions (in.)

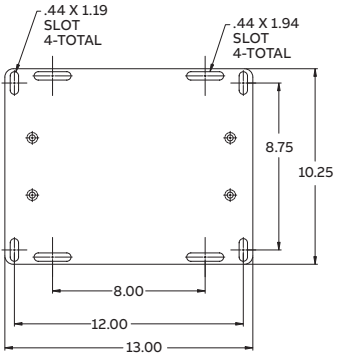

Rated voltage factor	Height (in.)	Width (in.)	Length (in.)	Weight (lbs.)
1.1	12.10	10.25	13.0	120
1.1	12.10	10.25	13.0	120

Product bulletin:
1VAP429761-DB

Mounting base dimensions (in.)

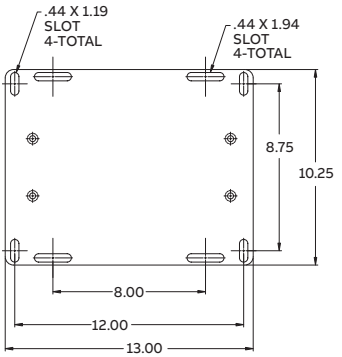

Rated voltage factor	Height (in.)	Width (in.)	Length (in.)	Weight (lbs.)
1.1	12.10	10.25	13.57	120
1.1	12.10	10.25	13.57	120
1.1	12.10	10.25	13.57	120
1.1	12.10	10.25	13.57	120

Rated voltage factor	Height (in.)	Width (in.)	Length (in.)	Weight (lbs.)
1.1	14.82	10.25	17.9	122
1.1	14.82	10.25	17.9	122
1.1	14.82	10.25	17.9	122
1.1	14.82	10.25	17.9	122

VIZZ-15 and VIZZ-15G

25 kV
Indoor/outdoor
150 kV BIL
60 Hertz

Available at other ratios and single tapped secondary or double secondary

IEEE metering accuracy: 0.3W, X, M, Y, Z and ZZ (except where noted*)

	Primary voltage	Ratio	Style number
Two bushings Stud terminal Single secondary	12000/20800Y	100:1	7525A81G01
	14400/24940Y	120:1	7525A81G02
	15600/15600Y	130:1	7525A81G12
	18000/18000Y	150:1	7525A81G03
	20000/20000Y	166.67:1	7525A81G05
	24000/24000Y	200:1	7525A81G04

Two bushings Stud terminal Double secondary	12000/20800Y	100 & 100:1	7526A47G02
	14400/24940Y	120 & 120:1	7526A47G03
	18000/18000Y	150 & 150:1	7526A47G04
	24000/24000Y	200 & 200:1	7526A47G05

Two bushings Clamp terminals Single secondary	12000/20800Y	100:1	7525A82G01
	14400/24940Y	120:1	7525A82G02
	18000/18000Y	150:1	7525A82G03
	24000/24000Y	200:1	7525A82G04

One bushing Stud terminal Single secondary	12000/20800GY	100:1	7525A83G01
	14400/24940GY	120:1	7525A83G02
	20000/20000GY	166.67:1	7525A83G04
	22000/22000GY	183.3:1	7525A83G06

One bushing Stud terminal Double secondary	11500/20000GY	166.67&166.67:1	7883A29G03*
	13800/23900GY	200 & 200:1	7883A29G02*
	16800/29100GY	140 & 240:1	7883A29G01*

* IEEE metering accuracy: 0.3W, X, M, Y, Z

One bushing Clamp terminal Single secondary	12000/20800GY	100:1	7525A84G01
	14400/24940GY	120:1	7525A84G02
	18000/18000GY	150:1	7525A84G05
	20000/20000GY	166.67:1	7525A84G03
	24000/24000GY	200:1	7525A84G04

Mounting base dimensions (in.)

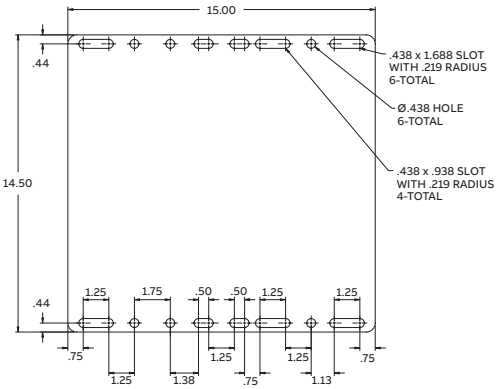

Upright mounting only.

Thermal rating	Rated voltage factor	Height (in.)	Width (in.)	Length (in.)	Weight (lbs.)
3000	1.1	22.3	16	18.6	205
3000	1.1	22.3	16	18.6	205
3000	1.1	22.3	16	18.6	205
3000	1.1	22.3	16	18.6	205
3000	1.1	22.3	16	18.6	205
3000	1.1	22.3	16	18.6	205
3000	1.1	22.3	16	18.6	205
3000	1.1	22.3	16	18.6	205
3000	1.1	22.3	16	18.6	205
3000	1.1	22.3	16	18.6	205
3000	1.1	22.3	16	18.6	205
3000	1.1	22.3	16	18.6	205
3000	1.1	22.3	16	18.6	205
3000	1.1	22.3	16	18.6	205
3000	1.1	22.3	15.6	18.6	205
3000	1.1	22.3	15.6	18.6	205
3000	1.1	22.3	15.6	18.6	205
3000	1.1	22.3	15.6	18.6	205
1000	1.2	22.3	15.6	18.6	205
2000	1.9	22.3	15.6	18.6	205
3000	1.9	22.3	15.6	18.6	205
3000	1.1	22.3	15.6	18.6	205
3000	1.1	22.3	15.6	18.6	205
3000	1.1	22.3	15.6	18.6	205
3000	1.1	22.3	15.6	18.6	205
3000	1.1	22.3	15.6	18.6	205

VOG-15R

25 kV
Outdoor
150 kV BIL
60 Hertz

Creep: 38.47" (977 mm)

Minimum operating and storage temperature: -50 °C

Thermal rating:
1000 VA @ 30 °C ambient

Also available with stud-type primary terminals.
Contact your ABB representative.

Note: This unit encapsulated with HCEP material only.

The VOG-15R is designed with ABB ResiVolt™ technology to withstand very fast transient overvoltages.

Contact factory or ABB representative for availability.

Primary voltage	Ratio	Style number
12000/20780GY	100:1	E-923A592G03
13200/22860GY	110:1	E-923A592G04
14400/24940GY	120:1	E-923A592G01

VOG-15B

25 kV
Outdoor
150 kV BIL
60 Hertz

Strike: 21.6" (549 mm)
Creep: 50.2" (1277 mm)

Minimum operating and storage temperature: -50 °C

Thermal rating:
1500 VA @ 30 °C ambient

Available with single, double, tapped and double tapped secondaries.
Also available with stud-type primary terminals.
Contact your ABB representative.

Note: This unit is encapsulated with HCEP material only.

Primary voltage	Ratio	Style number
12000/20780GY	100:1	E-923A680G01
13200/22860GY	110:1	E-923A680G02
14400/24940GY	120:1	E-923A680G03

Product bulletin:
1VAP429804-DB

Mounting base dimensions (in. [mm])

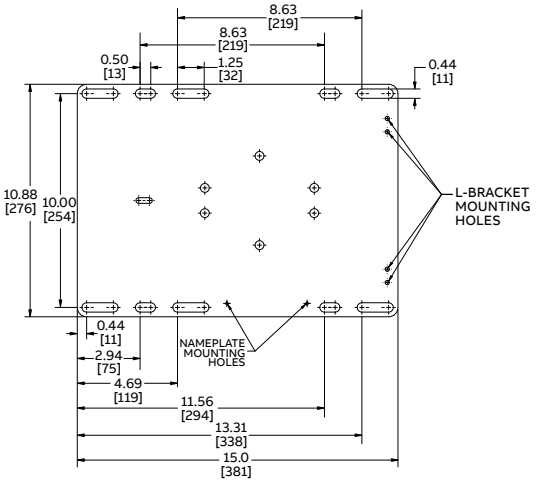

IEEE metering accuracy	Height (in.)	Width (in.)	Length (in.)	Weight (lbs.)
0.3W, X, M, Y	21.39	10.88	17.27	85
0.3W, X, M, Y	21.39	10.88	17.27	85
0.3W, X, M, Y	21.39	10.88	17.27	85

Product bulletin:
1VAP429807-DB

Mounting base dimensions (in. [mm])

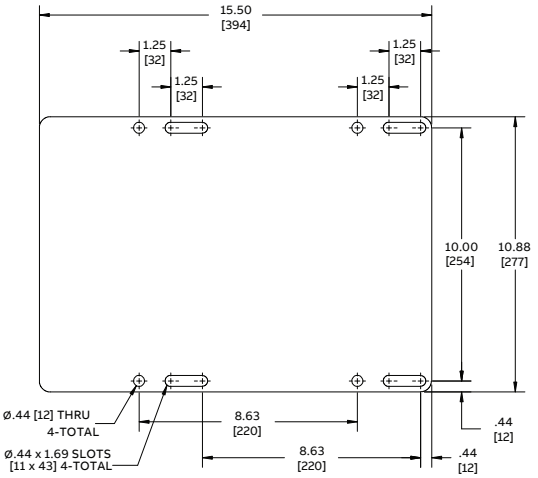

IEEE metering accuracy	Rated voltage factor (RVF)	Height (in.)	Width (in.)	Length (in.)	Weight (lbs.)
0.3Y	1.9	26.12	10.88	19.46	125
0.3Y	1.9	26.12	10.88	19.46	125
0.3Y	1.9	26.12	10.88	19.46	125

VRO-150G

25 kV
Outdoor
150 kV BIL
60 Hertz

Creep:
38.0" (965 mm)
Thermal rating:
2000 VA @ 30 °C
ambient

Note: Styles listed are encapsulated with HCEP.

	Primary voltage	Ratio	Style number
VRO-150G	14400/24940GY	120:1	E-923A720G01
	13800/23900GY	115:1	E-923A720G02
	13200/22860GY	110:1	E-923A720G03
	12000/20780GY	100:1	E-923A720G04
	8400/14560GY	70:1	E-923A720G05
	7620/13200GY	63.5:1	E-923A720G06
	7200/12470GY	60:1	E-923A720G07

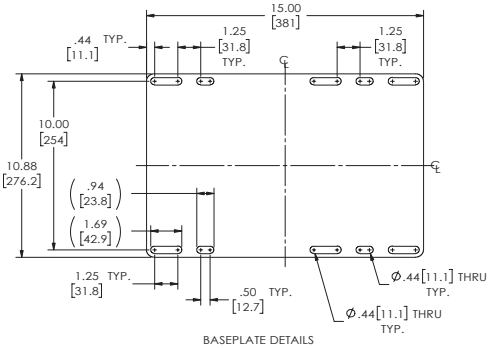

Thermal VA	Rated voltage factor (RVF)	IEEE metering accuracy	Height (in.)	Width (in.)	Length (in.)	Weight (lbs.)
2000	1.9	0.3Y	21.0	10.88	18.8	115
2000	1.9	0.3Y	21.0	10.88	18.8	115
2000	1.9	0.3Y	21.0	10.88	18.8	115
2000	1.9	0.3Y	21.0	10.88	18.8	115
2000	1.9	0.3Y	21.0	10.88	18.8	115
2000	1.9	0.3Y	21.0	10.88	18.8	115
2000	1.9	0.3Y	21.0	10.88	18.8	115

VOY-15

25 kV
Outdoor
150 kV BIL
60 Hertz

Creep:
38.0" (965 mm)

Thermal rating:
1000 VA @ 30 °C ambient

Note: Styles listed are encapsulated with HCEP. Contact your ABB representative for styles encapsulated with polyurethane.

	Primary voltage	Ratio	Style number
VOY-15	12000/20780Y	100:1	E-7526A62G01
	14400/24940Y	120:1	E-7526A62G02
	18000/18000Y	150:1	E-7526A62G03
	20000/20000Y	166.7:1	E-7526A62G04
	24000/24000Y	200:1	E-7526A62G05

VOZ-15 and VOZ-15E

25 kV
Outdoor
150 kV BIL
60 Hertz

Creep:
38.0" (965 mm)

Thermal rating:
2000 VA @ 30 °C ambient

	Primary voltage	Ratio	Style number
VOZ-15	12000/20780Y	100:1	E-7525A90G01
	14400/24940Y	120:1	E-7525A90G02
	18000/18000Y	150:1	E-7525A90G03
	24000/24000Y	200:1	E-7525A90G04

(Styles listed are encapsulated with HCEP; also available in polyurethane.)

VOZ-15E Special high accuracy (polyurethane only)	12000/20780Y	100:1	923A398G01
	14400/24940Y	120:1	923A398G02
	18000/18000Y	150:1	923A398G03
	24000/24000Y	200:1	923A398G04

Product bulletin:
1VAP429701-DB

Mounting base dimensions (in.)

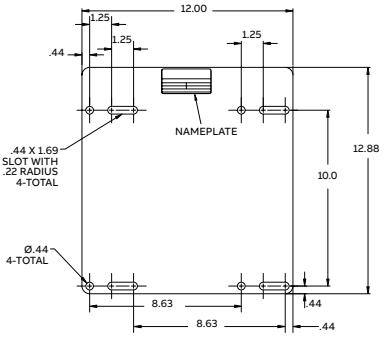

IEEE metering accuracy	Height (in.)	Width (in.)	Length (in.)	Weight (lbs.)
0.3W, X, M, Y	19.00	15.97	16.94	125
0.3W, X, M, Y	19.00	15.97	16.94	125
0.3W, X, M, Y	19.00	15.97	16.94	125
0.3W, X, M, Y	19.00	15.97	16.94	125
0.3W, X, M, Y	19.00	15.97	16.94	125

Product bulletin:
1VAP429711-DB

Mounting base dimensions (in.)

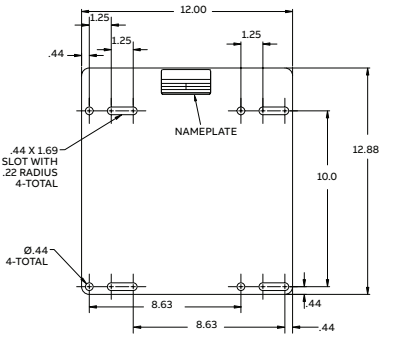

IEEE metering accuracy	Height (in.)	Width (in.)	Length (in.)	Weight (lbs.)
0.3W, X, M, Y, Z	19.00	15.97	16.94	125
0.3W, X, M, Y, Z	19.00	15.97	16.94	125
0.3W, X, M, Y, Z	19.00	15.97	16.94	125
0.3W, X, M, Y, Z	19.00	15.97	16.94	125

0.15W, X, Y	19.00	15.87	16.94	125
0.15W, X, Y	19.00	15.87	16.94	125
0.15W, X, Y	19.00	15.87	16.94	125
0.15W, X, Y	19.00	15.87	16.94	125

VOZZ-15 and VOZZ-15G

25 kV
Outdoor
150 kV BIL
60 Hertz

Available with double secondaries and tapped double secondaries.

Also available with stud-type primary terminals. Contact your ABB representative.

	Primary voltage	Ratio	Style number
VOZZ-15 Two bushings Creep: 36.25" (921 mm)	12000/20800Y	100:1	7525A93G01
	14400/24940Y	120:1	7525A93G02
	18000/18000Y	150:1	7525A93G03
	24000/24000Y	200:1	7525A93G04
	21000/21000Y	175:1	7525A93G12
	19920/19920Y	166:1	7525A93G13

	Primary voltage	Ratio	Style number
VOZZ-15G One bushing Creep: 30.5" (775 mm)	12000/20800GY	100:1	7525A98G01
	14400/24940GY	120:1	7525A98G02
	13200/22860GY	110:1	7525A98G03
	14400/24940GY	120:1	7525A98G04
	7200/12470GY	60:1	7525A98G05
	8000/13860GY	66.67:1	7525A98G06
	24000/24000GY	200:1	7525A98G07
	12000/20800GY	100:1	7525A98G08

Mounting base dimensions (in.)

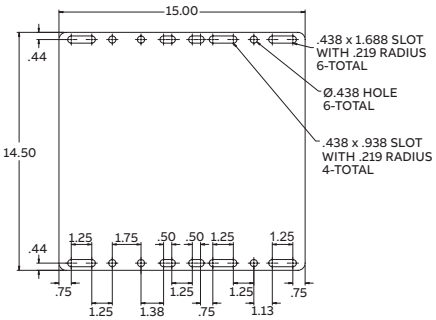

Upright mounting only.

Thermal VA	IEEE metering accuracy	Height (in.)	Width (in.)	Length (in.)	Weight (lbs.)
3000	0.3W, X, M, Y, Z, ZZ	23.0	16.1	17.6	205
3000	0.3W, X, M, Y, Z, ZZ	23.0	16.1	17.6	205
3000	0.3W, X, M, Y, Z, ZZ	23.0	16.1	17.6	205
3000	0.3W, X, M, Y, Z, ZZ	23.0	16.1	17.6	205
3000	0.3W, X, M, Y, Z, ZZ	23.0	16.1	17.6	205
3000	0.3W, X, M, Y, Z, ZZ	23.0	16.1	17.6	205

Thermal VA	IEEE metering accuracy	Height (in.)	Width (in.)	Length (in.)	Weight (lbs.)
3000	0.3W, X, M, Y, Z, ZZ	23.0	15.6	17.6	202
3000	0.3W, X, M, Y, Z, ZZ	23.0	15.6	17.6	202
3000	0.3W, X, M, Y, Z, ZZ	23.0	15.6	17.6	202
1200	0.3W, X, M, Y, Z	23.0	15.6	17.6	202
3000	0.3W, X, M, Y, Z, ZZ	23.0	15.6	17.6	202
3000	0.3W, X, M, Y, Z, ZZ	23.0	15.6	17.6	202
3000	0.3W, X, M, Y, Z, ZZ	23.0	15.6	17.6	202
1000	0.3W, X, M, Y, Z, ZZ	23.0	15.6	17.6	202

VIZ-20 and VIZ-20G

34.5 kV
Indoor
200 kV BIL
60 Hertz

Thermal rating:
1000 VA @ 30 °C ambient
750 VA @ 55 °C ambient

IEEE metering accuracy:
0.3W, X, M, Y, Z and ZZ

Fuse kit to convert unfused VIZ-20 to fused style: 9628A05G90 (contains two CLE-PT fuses (0.5E, 38 kV, style # 50C5225G05) and hardware)

Fuse kit to convert unfused VIZ-20G to fused style: 9628A05G83 (contains one CLE-PT fuse (0.5E, 38 kV style # 50C5225G05) and hardware)

	Primary voltage	Ratio	Style number	Fuse rating
VIZ-20 Unfused	20125/34500Y	175:1	7883A60G03	–
	27600/27600Y	240:1	7883A60G02	–
	34500/34500Y	300:1	7883A60G01	–
VIZ-20 Fused	20125/34500Y	175:1	7883A40G03	0.5E
	27600/27600Y	240:1	7883A40G02	0.5E
	34500/34500Y	300:1	7883A40G01	0.5E
VIZ-20G Unfused	20125/34500GY	175:1	7883A61G01	–
	34500/34500GY	300:1	7883A61G02	–
	19942/34500GY	289:1	7883A61G04	–
	16100/27900GY	240:1	7883A61G05	–
VIZ-20G Fused	20125/34500GY	175:1	7883A41G01	0.5E
	34500/34500GY	300:1	7883A41G02	0.5E
	24000/24000GY	200:1	7883A41G05	0.5E
	25000/25000GY	208.33:1	7883A41G06	0.5E
	26400/26400GY	220:1	7883A41G07	0.5E
	24900/24900GY	207.5:1	7883A41G08	0.5E
	28800/28800GY	240:1	7883A41G09	0.5E
	27600/27600GY	240:1	7883A41G10	0.5E

Mounting base dimensions (in.)

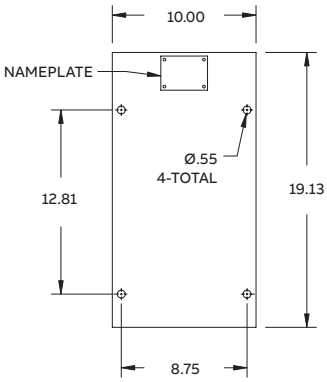

Rated voltage factor	Height (in.)	Width (in.)	Length (in.)	Weight (lbs.)
1.1	16.5	16.26	19.13	161
1.1	16.5	16.26	19.13	161
1.1	16.5	16.26	19.13	161
1.1	16.5	16.26	19.13	165
1.1	16.5	16.26	19.13	165
1.1	16.5	16.26	19.13	165
1.4	16.5	10.0	19.13	148
1.1	16.5	10.0	19.13	148
1.1	16.5	10.0	19.13	148
1.4	16.5	10.0	19.13	148
1.4	16.5	10.0	19.13	150
1.1	16.5	10.0	19.13	150
1.4	16.5	10.0	19.13	150
1.1	16.5	10.0	19.13	150
1.1	16.5	10.0	19.13	150
1.1	16.5	10.0	19.13	150
1.1	16.5	10.0	19.13	150
1.1	16.5	10.0	19.13	150

VOG-20B and VOG-20BR

34.5 kV
Outdoor
200 kV BIL
60 Hertz

Strike: 21.6" (549 mm)
Creep: 50.2" (1277 mm)

Minimum operating temperature:
-50 °C

Thermal rating:
1500 VA @ 30 °C ambient

The VOG-20BR is designed with ABB ResiVolt™ technology to withstand very fast transient overvoltages.

Also available with stud-type primary terminals.
Contact your ABB representative.

Available with single, double, tapped and double tapped secondaries.

Note: This unit is encapsulated with HCEP material only.

	Primary voltage	Ratio	Style number
VOG-20B	19920/34500GY	166:1	E-923A652G02
	20125/34500GY	175:1	E-923A652G01
	20125/34500GY	175/300:1	E-923A655G02
	20125/34500GY	175 & 300:1	E-923A685G01
	20125/34500GY	175/300 & 175/300:1	E-923A609G01

VOG-20BR	19920/34500GY	166:1	E-923A602G02
	20125/34500GY	175:1	E-923A602G01
	20125/34500GY	175/300:1	E-923A611G02
	20125/34500GY	175 & 300:1	E-923A687G01
	20125/34500GY	175/300 & 175/300:1	E-923A663G01

Mounting base dimensions (in. [mm])

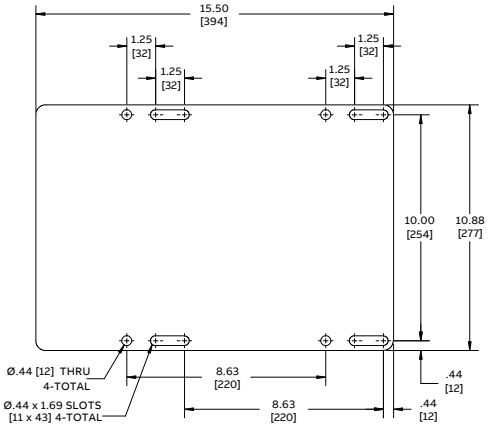

IEEE metering accuracy	Rated voltage factor (RVF)	Height (in.)	Width (in.)	Length (in.)	Weight (lbs.)
0.3Y	1.9	26.12	10.88	19.46	125
0.3Y	1.9	26.12	10.88	19.46	125
0.3Y	1.9	26.12	10.88	19.46	125
0.3Y	1.9	26.12	10.88	19.46	125
0.3Y	1.9	26.12	10.88	19.46	125

0.3Y	1.9	26.12	10.88	19.46	125
0.3Y	1.9	26.12	10.88	19.46	125
0.3Y	1.9	26.12	10.88	19.46	125
0.3Y	1.9	26.12	10.88	19.46	125
0.3Y	1.9	26.12	10.88	19.46	125

VOY-20

34.5 kV
Outdoor
200 kV BIL
60 Hertz

Creep:
38.0" (965 mm)

Thermal rating:
1000 VA @ 30 °C ambient

Note: Styles listed are encapsulated with HCEP. Contact your ABB representative for styles encapsulated with polyurethane.

	Primary voltage	Ratio	Style number
VOY-20	27600/27600Y	240:1	E-7881A82G03
	34500/34500Y	275:1	E-7881A82G04
	27600/27600Y	240/400:1	E-923A107G01
	34500/34500Y	300/500:1	E-923A107G02
	20125/34500Y	175/300:1	E-923A107G03

VOZ-20

34.5 kV
Outdoor
200 kV BIL
60 Hertz

Creep:
38.0" (965 mm)

Thermal rating:
2000 VA @ 30 °C ambient

Note: Styles listed are encapsulated with HCEP. Contact your ABB representative for styles encapsulated with polyurethane.

Primary voltage	Ratio	Style number
20125/34500Y	175/300:1	E-7525A92G01
27600/27600Y	240/400:1	E-7525A92G02
34500/34500Y	300/500:1	E-7525A92G03
20125/34500Y	175:1	E-7526A33G05

Product bulletin:
1VAP429741-DB

Mounting base dimensions (in.)

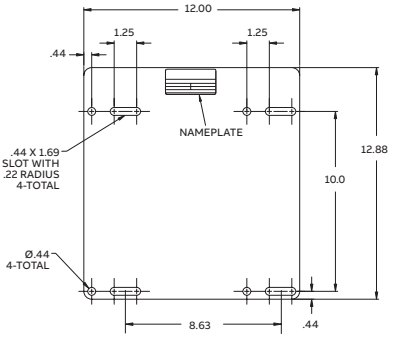

IEEE metering accuracy	Height (in.)	Width (in.)	Length (in.)	Weight (lbs.)
0.3 W, X, M, Y	19.0	15.98	16.94	125
0.3 W, X, M, Y	19.0	15.98	16.94	125
0.3 W, X, M, Y	19.0	15.98	16.94	125
0.3 W, X, M, Y	19.0	15.98	16.94	125
0.3 W, X, M, Y	19.0	15.98	16.94	125

Product bulletin:
1VAP429751-DB

Mounting base dimensions (in.)

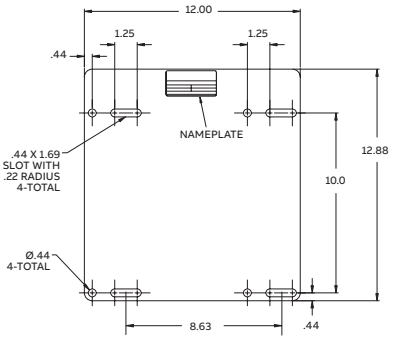

IEEE metering accuracy	Height (in.)	Width (in.)	Length (in.)	Weight (lbs.)
0.3 W, X, M, Y, Z	19.0	15.97	16.94	125
0.3 W, X, M, Y, Z	19.0	15.97	16.94	125
0.3 W, X, M, Y, Z	19.0	15.97	16.94	125
0.3 W, X, M, Y, Z	19.0	15.97	16.94	125

VOZZ-20 and VOZZ-20G

34.5 kV
Outdoor
200 kV BIL
60 Hertz

Creep:
VOZZ-20: 41.0" (1041 mm)
VOZZ-20G: 41.875" (1063 mm)

Thermal rating:
3000 VA @ 30 °C ambient

	Primary voltage	Ratio	Style number
VOZZ-20 Two bushings	27600/27600Y	240:1	7883A11G02
	34500/34500Y	300:1	7883A11G01
	27600/27600Y	240 & 240:1	9629A96G02
	34500/34500Y	300 & 300:1	9629A96G01
VOZZ-20G One bushing	20125/34500GY	175:1	923A247G04
	20125/34500GY	175/300:1 & 175/300:1	9629A97G01
	20125/34500GY	175/300:1	7882A42G01

Also available with stud-type primary terminals.
Contact your ABB representative.

Mounting base dimensions (in.)

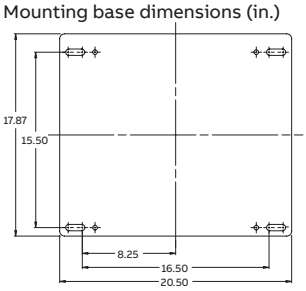

Upright mounting only.

IEEE metering accuracy	Height (in.)	Width (in.)	Length (in.)	Weight (lbs.)
0.3W, X, M, Y, Z, ZZ	26.13	18.1	24.3	330
0.3W, X, M, Y, Z, ZZ	26.13	18.1	24.3	330
0.3W, X, M, Y, Z, ZZ	26.13	18.1	24.3	330
0.3W, X, M, Y, Z, ZZ	26.13	18.1	24.3	330
0.3W, X, M, Y, Z, ZZ	27.54	17.0	24.3	325
0.3W, X, M, Y, Z, ZZ	27.54	17.0	24.3	325
0.3W, X, M, Y, Z, ZZ	27.54	17.0	24.3	325

15–34.5 KV COMBINED CURRENT AND VOLTAGE TRANSFORMERS

CVC-110BER and CVC-110BRER

15 kV
Outdoor
110 kV BIL
60 Hertz

Strike: 14.4" (567 mm)
Creep: 22.3" (567 mm)
Thermal rating: 500 VA
Rated voltage factor (RVF): 1.2

The CVC-110BER and CVC-110BRER are part of ABB's AccuRange® current transformer portfolio with 0.15% accuracy from 1% of nominal current through rating factor.

The CVC-110BRER is designed with ABB ResiVolt™ technology to withstand very fast transient overvoltages.

Note: This unit is encapsulated with HCEP material only.

		Current transformer		
CVC-110BER style number	**CVC-110BRER style number**	**Ratio**	**Rating factor @ 30°C**	**Metering accuracy**
E-923A705G02	E-923A709G02	25:5	3.0	0.15B-0.5
E-923A705G01	E-923A709G01	50:5	3.0	0.15B-0.5
E-923A705G03	E-923A709G03	200:5	1.5	0.15B-1.8
E-923A705G04	E-923A709G04	200:5	3.0	0.15B-0.5
E-923A705G05	E-923A709G05	400:5	1.5	0.15B-0.9
E-923A705G06	E-923A709G06	400:5	3.0	0.15B-0.5
E-923A705G07	E-923A709G07	600:5	1.5	0.15B-0.5
E-923A705G08	E-923A709G08	800:5	1.2	0.15B-1.8
E-923A705G09	E-923A709G08	1000:5	1.5	0.15B-1.8
E-923A705G10	E-923A709G10	200:5	1.5	0.15B-1.8
E-923A705G11	E-923A709G11	200:5	3.0	0.15B-0.5
E-923A705G12	E-923A709G12	1000:5	1.5	0.15B-1.8
E-923A705G13	E-923A709G13	50:5	3.0	0.15B-0.5
E-923A705G14	E-923A709G14	200:5	1.5	0.15B-1.8
E-923A705G15	E-923A709G15	200:5	3.0	0.15B-0.5
E-923A705G17	E-923A709G17	600:5	1.5	0.15B-0.5
E-923A705G18	E-923A709G18	1000:5	1.5	0.15B-1.8

One second thermal rating:
25–600 amps, 100 x normal;
800 amps, 75 x normal; 1000 amps, 60 x normal;

One second mechanical rating: 2.7 times thermal rating

Mounting base dimensions (in.)

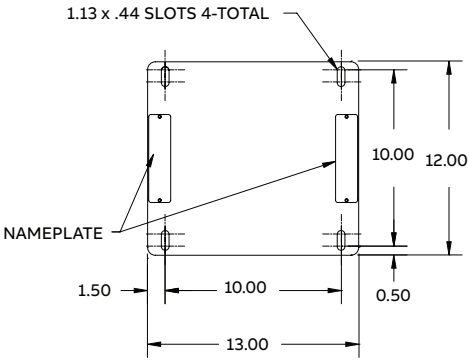

Voltage transformer						
Primary voltage	**Ratio**	**Accuracy**	**Height (in.)**	**Width (in.)**	**Length (in.)**	**Weight (lbs.)**
7200/12470GY	60:1	0.3Y	19.75	13.0	15.17	98
7200/12470GY	60:1	0.3Y	19.75	13.0	15.17	98
7200/12470GY	60:1	0.3Y	19.75	13.0	15.17	98
7200/12470GY	60:1	0.3Y	19.75	13.0	15.17	98
7200/12470GY	60:1	0.3Y	19.75	13.0	15.17	98
7200/12470GY	60:1	0.3Y	19.75	13.0	15.17	98
7200/12470GY	60:1	0.3Y	19.75	13.0	15.17	98
7200/12470GY	60:1	0.3Y	19.75	13.0	15.17	98
7200/12470GY	60:1	0.3Y	19.75	13.0	15.17	98
7620/13200GY	63.5:1	0.3Y	19.75	13.0	15.17	98
7620/13200GY	63.5:1	0.3Y	19.75	13.0	15.17	98
7620/13200GY	63.5:1	0.3Y	19.75	13.0	15.17	98
8400/14560GY	70:1	0.3Y	19.75	13.0	15.17	98
8400/14560GY	70:1	0.3Y	19.75	13.0	15.17	98
8400/14560GY	70:1	0.3Y	19.75	13.0	15.17	98
8400/14560GY	70:1	0.3Y	19.75	13.0	15.17	98
8400/14560GY	70:1	0.3Y	19.75	13.0	15.17	98

CVC-150

25 kV
Outdoor
150 kV BIL
60 Hertz

Creep: 47.5" (1209 mm)

VT thermal rating:
400/750 VA

Suitable for upright orientation only.

				Current transformer
Style number	**Ratio**	**Rating factor @ 30 °C**	**Accuracy**	**One sec. thermal/ mechanical rating**
923A578G01	25:5	1.5	0.15B-0.9	100/140
923A578G02	50:5	1.5	0.15B-1.8	100/140
923A578G03	100:5	1.5	0.15B-1.8	100/140
923A578G04	150:5	1.5	0.15B-1.8	100/140
923A578G05	200:5	1.5	0.15B-1.8	100/140
923A578G06	300:5	1.5	0.15B-1.8	100/140
923A578G07	400:5	1.5	0.15B-1.8	100/140
923A578G08	600:5	1.5	0.15B-1.8	100/140
923A578G09	800:5	1.5	0.15B-1.8	100/140
923A578G10	1200:5	1.5	0.15B-1.8	100/140

CVC-200

36 kV
Outdoor
200 kV BIL
60 Hertz

Creep: 38.7" (983 mm)

VT thermal rating:
750 VA

Suitable for upright orientation only.

				Current transformer
Style number	**Ratio**	**Rating factor @ 30 °C**	**Accuracy**	**One sec. thermal/ mechanical rating**
923A512G01	200:5	1.5	0.15B-1.8	100/140
923A512G02	200:5	1.5	0.15B-1.8	100/140
923A512G03	400:5	2	0.3B-1.8	100/140
923A512G04	300:5	3	0.3B-1.8	100/140
923A512G05	200:5	1.5	0.15B-1.8	100/140
923A512G06	600:5	1.5	0.15B-1.8	100/140
923A512G07	1600:5	1	0.3B-1.8	100/140
923A512G08	200:5	1.5	0.15B-1.8	100/140

Product bulletin:
1VAP429991-DB

Mounting base dimensions (in.)

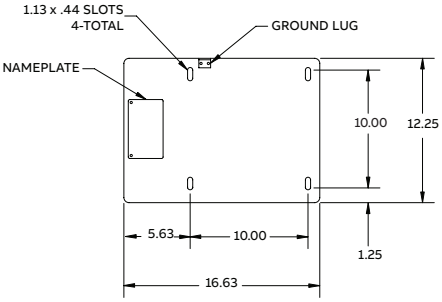

	Voltage transformer						
Primary voltage	Ratio	Accuracy	RVF	Height (in.)	Width (in.)	Length (in.)	Weight (lbs.)
7200/14400	60:1	0.3X/Y	1.9	27.5	16.6	16.6	200
7200/14400	60:1	0.3X/Y	1.9	27.5	16.6	16.6	200
7200/14400	60:1	0.3X/Y	1.9	27.5	16.6	16.6	200
7200/14400	60:1	0.3X/Y	1.9	27.5	16.6	16.6	200
7200/14400	60:1	0.3X/Y	1.9	27.5	16.6	16.6	200
7200/14400	60:1	0.3X/Y	1.9	27.5	16.6	16.6	200
7200/14400	60:1	0.3X/Y	1.9	27.5	16.6	16.6	200
7200/14400	60:1	0.3X/Y	1.9	27.5	16.6	16.6	200
7200/14400	60:1	0.3X/Y	1.9	27.5	16.6	16.6	200

Product bulletin:
1VAP429996-DB

Mounting base dimensions (in.)

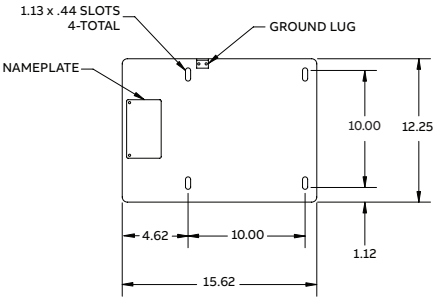

	Voltage transformer						
Primary voltage	Ratio	Accuracy	RVF	Height (in.)	Width (in.)	Length (in.)	Weight (lbs.)
20125/34500GY	175:1	0.3Y	1.9	31.0	15.62	16.6	274
20125/34500GY	175/514.3:1	0.3Y/0.3Y	1.9	31.0	15.62	16.6	274
20125/34500GY	175:1	0.3Y	1.9	31.0	15.62	16.6	274
20125/34500GY	175:1	0.3Y	1.9	31.0	15.62	16.6	274
19053/33000GY	158.7:1	0.3Y	1.9	31.0	15.62	16.6	274
20125/34500GY	167.7:1	0.3Y	1.9	31.0	15.62	16.6	274
20125/34500GY	175/514.3:1	0.3Y/0.3Y	1.9	31.0	15.62	16.6	274
20125/34500GY	167.7:1	0.3Y	1.9	31.0	15.62	16.6	274

Auxiliary

Current or voltage
Indoor
Test voltage: 2500 volts
25-60 Hertz

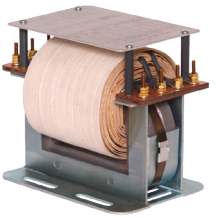

	Style number	Ratio	Relaying accuracy
Multi-ratio	7881A02G01	3, 4, 5:0.5-1	T50
	7881A02G02	3, 4, 5:2-4	T50
	7881A02G03	6, 8, 10:0.5-1	T50
	7881A02G04	6, 8, 10:0.5-1	T50
	7881A02G05	6, 8, 10:1-2	T50
	7881A02G06	6, 8, 10:4-8	T50
	7881A02G07	4, 4.62, 4.8:4-8	T50
	7881A03G01	4, 5.33, 6.4:16-32	T50
	7881A03G02	3, 4, 5:10-20	T50
	7881A03G03	3, 4, 5:5-10	T50
	7881A03G04	3, 4, 5:1-2	T50

	Style number	Ratio	Relaying accuracy
Single ratio	7881A01G01	5:5	T50
	7881A01G02	10:5	T50
	7881A01G03	15:5	T50

Contact the factory for additional styles.

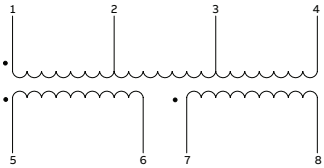

Two-part winding

Multi-ratio
winding development
Tapped winding

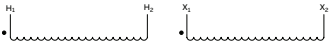

Single ratio
winding development

IEEE metering accuracy	Height (in.)	Width (in.)	Length (in.)	Weight (lbs.)
0.3B-0.5, 0.6B-1.8	7.0	5.5	8.50	23
0.3B-0.5, 0.6B-1.8	7.0	5.5	8.50	23
0.3B-0.5, 0.6B-1.8	7.0	5.5	8.50	23
0.3B-0.5, 0.6B-1.8	7.0	5.5	8.50	23
0.3B-0.5, 0.6B-1.8	7.0	5.5	8.50	23
0.3B-0.5, 0.6B-1.8	7.0	5.5	8.50	23
0.3B-0.5, 0.6B-1.8	7.0	5.5	8.50	23
0.3B-0.5, 0.6B-1.8	7.0	5.5	8.50	23
0.3B-0.5, 0.6B-1.8	7.0	5.5	8.50	23
0.3B-0.5, 0.6B-1.8	7.0	5.5	8.50	23
0.3B-0.5, 0.6B-1.8	7.0	5.5	8.50	23

IEEE metering accuracy	Height (in.)	Width (in.)	Length (in.)	Weight (lbs.)
0.3B-0.5, 0.6B-1.8	6.37	5.75	7.75	23
0.3B-0.5, 0.6B-1.8	6.37	5.75	7.75	23
0.3B-0.5, 0.6B-1.8	6.37	5.75	7.75	23

CUSTOM ENGINEERED DESIGNS
FOR SPECIAL APPLICATIONS

ACT-633/645

600 Volts
Indoor
10 kV BIL
60 Hertz

Partial style listing below. Contact your ABB representative for additional styles or winding arrangements. Refer to the product bulletin for a comprehensive list of styles.

	Style number	Primary	Secondary	Relaying accuracy
ACT-633	A1418420-570	1	1	T200
	A1425215-570	1	5	T150
	A1401320-570	5	1	T200
	A1402810-570	5	5	T100
	A1406220-570	5	5	T200
	A1412610-570	5	8.33	T100
	A1412720-570	5	10	T200
	A1412120-570	12.5	5	T200
	A1404610-570	25	5	T100
	A1417720-570	50	5	T200

	Style number	Primary	Secondary	Relaying accuracy
ACT-645	A1502460-570	2.5	5	T600
	A1501020-570	5	1	T200
	A1501840-570	5	5	T400
	A1508840-570	5	10	T400
	A1502860-570	6.67	5	T600
	A1504640-570	7.5	5	T400
	A1504740-570	8.33	5	T400
	A1500620-570	10	5	T200
	A1503340-570	12.5	5	T400
	A1505040-570	25	5	T400

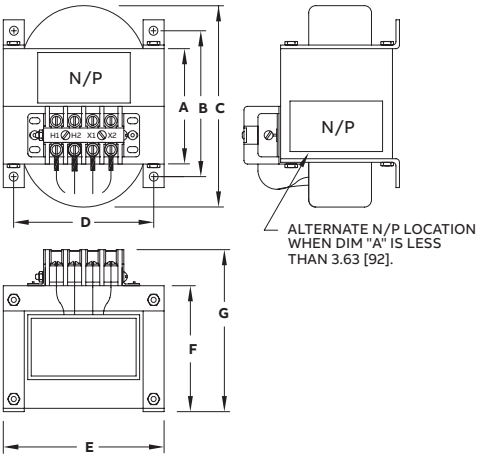

Rating factor @ 30 °C	Dim A (in.)	Dim B (in.)	Dim C (in.)	Weight (lbs.)
1.5	6.0	7.25	8.7	26
1.5	6.0	7.25	8.3	37
1.5	4.0	5.25	6.5	26
2.0	4.0	5.25	6.6	32
2.0	6.0	7.25	8.7	39
1.0	4.0	5.25	6.9	23
1.3	6.0	7.25	8.8	40
1.5	6.0	7.25	8.6	32
1.0	4.0	5.25	6.7	27
1.0	6.0	7.25	8.7	37

Rating factor @ 30 °C	Dim A (in.)	Dim B (in.)	Dim C (in.)	Weight (lbs.)
1.5	6.0	8.0	9.3	70
1.5	4.0	6.0	6.7	46
2.0	4.63	6.63	8.1	57
1.5	6.0	8.0	9.5	72
1.5	6.0	8.0	9.2	71
1.5	5.0	7.0	8.2	60
1.5	4.63	6.63	7.9	56
1.5	5.0	7.0	8.0	58
1.5	5.0	7.0	8.2	60
1.0	5.5	7.5	8.3	59

Dimensions (in.)	ACT-633	ACT-645
A	See table above	See table above
B	See table above	See table above
C	See table above	See table above
D	5.0	6.50
E	5.75	7.50
F	4.38	6.38
G	5.63	7.75

CUSTOM ENGINEERED DESIGNS
FOR SPECIAL APPLICATIONS

APT-646/733

600 Volts
Indoor
10 kV BIL
60 Hertz

Partial style listing below. Contact your ABB representative for additional styles or winding arrangements. Refer to the product bulletin for a comprehensive list of styles.

	Style number	Primary	Secondary	Thermal VA
APT-646	A2900610-570	67	115	150
	A2900750-570	69.3	120	200
	A2900070-570	120	69.4	150
	A2900310-570	120	120	150
	A2900390-570	120	120/69.4	150
	A2900660-570	208	120	150
	A2900690-570	480	277	150

	Style number	Primary	Secondary	Thermal VA
APT-733	A2300030-570	70	120	500
	A2300018-570	120	120	500
	A2300015-570	120	120	1500
	A2300037-570	208	120	2000
	A2300019-570	360	120	500
	A2300034-570	480	120	500
	A2300016-570	480	220	2000

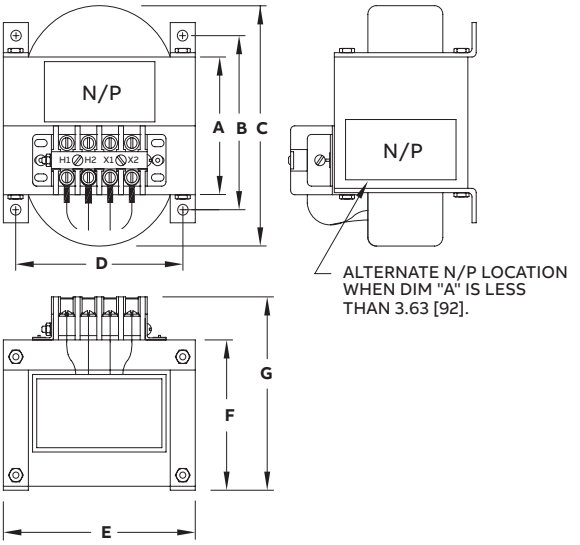

Accuracy*	Dim A (in.)	Dim B (in.)	Dim C (in.)	Weight (lbs.)
1%	2.5	3.75	5.2	14
0.6X	2.5	3.75	4.82	14
1%	2.63	3.88	5.8	15
0.6X	2.63	3.88	5.8	15
1%	3.0	4.25	6.2	18
0.6X	3.5	4.75	6.2	20
1%	4.0	5.25	7.2	23

Accuracy*	Dim A (in.)	Dim B (in.)	Dim C (in.)	Weight (lbs.)
1%	4.0	6.0	6.6	41
0.6X	3.0	5.0	5.9	31
0.6X	5.0	7.0	8.1	51
0.6X	4.0	6.0	6.6	41
0.6M	4.0	6.0	6.6	41
1%	2.5	4.5	5.2	30
1%	6.0	8.0	8.6	61

* Accuracy is maintained from 90% through 110% of rated voltage.

Dimensions (in.)	APT-646	APT-733
A	See table above	See table above
B	See table above	See table above
C	See table above	See table above
D	5.0	6.50
E	5.75	7.50
F	4.38	6.38
G	5.63	7.75

CUSTOM ENGINEERED DESIGNS
FOR SPECIAL APPLICATIONS

Product bulletin:
1VAP701111-DB

ACT-983

600 Volts
Indoor/outdoor
10 kV BIL
60 Hertz

Current ratio	Style number (CT only)	Style number (CT with junction box)	Rating factor @ 30 °C
0.5:5	A49W005A050S180570	A49W005A050S18T570	1.5
1:5	A49W010A050S180570	A49W010A050S18T570	1.5
2.5:5	A49W025A050S180570	A49W025A050S18T570	1.5
3.33:5	A49W033A050S180570	A49W033A050S18T570	1.5
5:5	A49W050A050S180570	A49W050A050S18T570	3.0
7.5:5	A49W075A050S180570	A49W075A050S18T570	1.5
10:5	A49W100A050S180570	A49W100A050S18T570	1.5
15:5	A49W150A050S180570	A49W150A050S18T570	1.5
20:5	A49W200A050S180570	A49W200A050S18T570	1.5
25:5	A49W250A050S180570	A49W250A050S18T570	1.5

Mounting base dimensions (in.)

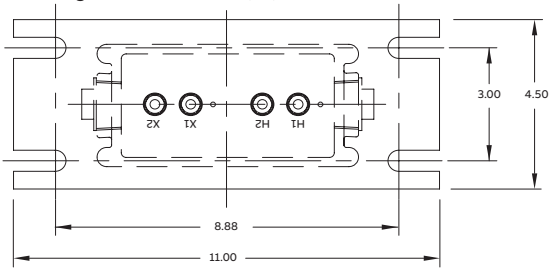

Note: Units are custom manufactured to customer specifications.
Contact your ABB representative to discuss other options.

CUSTOM ENGINEERED DESIGNS
FOR SPECIAL APPLICATIONS

Product bulletin:
42-852

Type A
Current balancing auto

Indoor test voltage: 2500 volts
25–60 Hertz

Type A transformers provide a large number of fine ratio adjustment taps for establishing an exact current ratio balance between the CTs on the input and output sides of power transformers. Contact your ABB representative for more information.

Volt-ampere rating	Style number	Ratio adjustment range
50	7881A17G01	From 10.8:5 to 5:5 amps
100	7881A17G02	From 10.8:5 to 5:5 amps

Dimensions and weights		
	50 VA	100 VA
Height (in.)	7.00	7.00
Width (in.)	6.50	6.50
Length (in.)	6.75	7.75
Weight (lbs.)	20.00	24.00

Stated VA are applicable for 60 Hz

Winding development

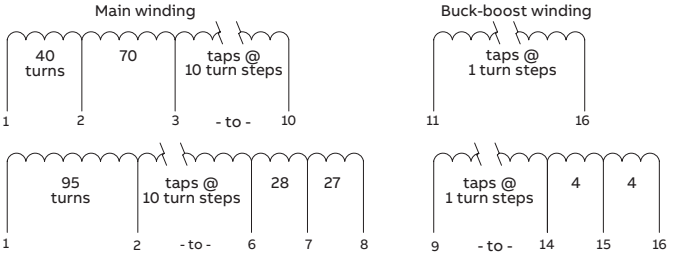

Mounting base dimensions (in.)

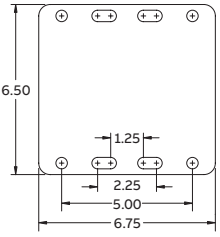

CO-9740

600 Volts
Indoor
60 Hertz

	Primary amps	Style number	IEEE metering accuracy
2.75" x 2.75" window (Dim A and B)	300	A19R27S03-570	1.2B-0.1
	400	A19R27S04-570	0.6B-0.1
	500	A19R27S05-570	0.6B-0.1
	600	A19R27S06-570	0.6B-0.1
	800	A19R27S08-570	0.3B-0.1
5.5" x 5.5" window (Dim A and B)	300	A19R55S03-570	1.2B-0.1
	400	A19R55S04-570	0.6B-0.1
	500	A19R55S05-570	0.6B-0.1
	600	A19R55S06-570	0.6B-0.1
	800	A19R55S08-570	0.6B-0.2
	1000	A19R55S10-570	0.3B-0.5
	1200	A19R55S12-570	0.3B-0.5
	1500	A19R55S15-570	0.3B-0.9
	1600	A19R55S16-570	0.3B-0.9
	2000	A19R55S20-570	0.3B-1.8
9.0" x 9.0" window (Dim A and B)	600	A19R90S06-570	1.2B-0.1
	800	A19R90S08-570	0.6B-0.2
	1000	A19R90S10-570	0.3B-0.5
	1200	A19R90S12-570	0.3B-0.5
	1500	A19R90S15-570	0.3B-0.9
	1600	A19R90S16-570	0.3B-0.9
	2000	A19R90S20-570	0.3B-1.8
	3000	A19R90S30-570	0.3B-1.8
	4000	A19R90S40-570	0.3B-1.8

One-second thermal/mechanical ratings:
80 x full winding I_{nom} / unlimited mechanical

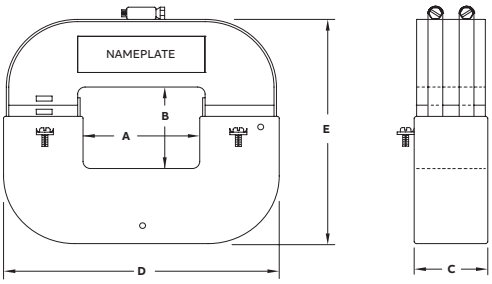

Relaying accuracy	Rating factor @ 30 °C	Dim E height (in.)	Dim D width (in.)	Dim C length (in.)	Weight (lbs.)
C20	1.5	6.0	6.0	4.50	20
C50	1.5	6.0	6.0	4.50	20
C50	1.5	6.0	6.0	4.50	20
C75	1.5	6.0	6.0	4.50	20
C100	1.5	6.0	6.0	4.50	20
C20	1.5	8.75	8.75	4.50	27
C50	1.5	8.75	8.75	4.50	27
C50	1.5	8.75	8.75	4.50	27
C75	1.5	8.75	8.75	4.50	27
C100	1.5	8.75	8.75	4.50	27
C100	1.5	8.75	8.75	4.50	27
C150	1.5	8.75	8.75	4.50	27
C150	1.5	8.75	8.75	4.50	27
C200	1.5	8.75	8.75	4.50	27
C200	1.5	8.75	8.75	4.50	27
C75	1.5	12.63	12.63	4.50	40
C100	1.5	12.63	12.63	4.50	40
C100	1.5	12.63	12.63	4.50	40
C150	1.5	12.63	12.63	4.50	40
C150	1.5	12.63	12.63	4.50	40
C200	1.5	12.63	12.63	4.50	40
C200	1.5	12.63	12.63	4.50	40
C300	1.5	12.63	12.63	4.50	40
C400	1.0	12.63	12.63	4.50	40

CUSTOM ENGINEERED DESIGNS
FOR SPECIAL APPLICATIONS

SP-061

600 Volts
Outdoor
60 Hertz

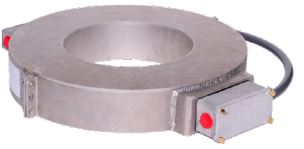

The SP-061 split-core CT is molded in an aluminum shell and available in numerous sizes. Because of its two-piece core, mounting in the horizontal position is preferred. Custom mounting brackets should be used to ensure the core separation surface is stable and provides optimum performance. If mounting in the vertical position, special mounting feet can help stabilize the core separation surface. The separation also introduces higher core loss and phase angle error, which restricts its use for revenue metering applications. Although it can be used in a wide variety of installations, the unit is primarily used over insulated MV and HV cable at underground to overhead termination points (potheads). Contact your ABB representative to discuss options and additional sizes, ratios and accuracy classes.

Primary amps	Style number (single ratio)	Style number (multi-ratio)	Relaying accuracy
200	W112455S2015200	–	C200
1200	W061645S1225400	W061645M1225400	C400
2000	W051645S2025800	W051645M2025800	C800
2000	W061645S2025800	W061645M2025800	C800
2000	W071742S2025800	W071742M2025800	C800
2000	W162442S2025400	W162442M2025400	C400
2000	W163035S2025800	W163035M2025800	C800
2000	W182640S2025200	W182640M2025200	C200
2000	W243254S2025800	W243254M2025800	C800
3000	W071640S3025800	W071640M3025800	C800
3000	W091840S3025800	W091840M3025800	C800
3000	W102040S3025800	W102040M3025800	C800
3000	W223052S3025-A1	W223052M3025-A1	C1200
3000	W223135S3025800	W223135M3025800	C800
3000	W263645S3025800	W263645M3025800	C800

Mounting:

All SP-061 units require a specific mounting kit. To order for a single unit: 150-Wxxxx where first five characters of style number follow 150-.

Units may be stacked, but must have space between and cannot touch adjacent unit. Special multi-unit mounting kits are also available.

Contact your ABB representative for other sizes, ratios, classes and mounting options.

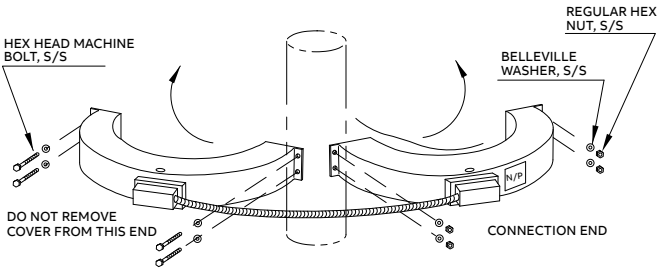

Unit dimensions (in. [mm])

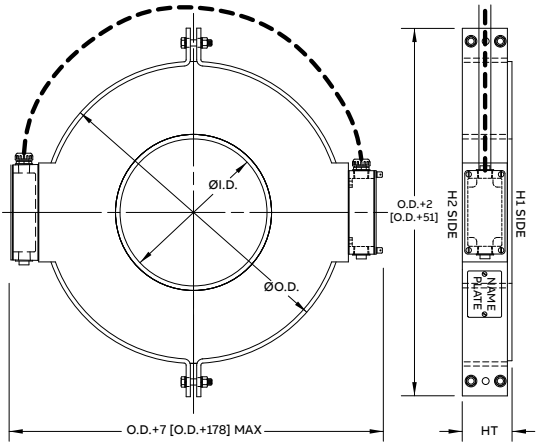

Rating factor @ 30 °C	I.D. (in.)	O.D. (in.)	Height (in.)	Weight (lbs.)
2.0	11.0	24.0	5.50	375
2.0	6.0	16.0	4.50	140
2.0	5.0	16.0	4.50	140
1.5	6.0	16.0	4.50	115
3.0	7.0	17.0	4.25	130
1.5	16.0	24.0	4.25	150
1.5	16.0	30.0	3.50	250
1.5	18.0	26.0	4.00	175
2.0	24.0	32.0	5.40	320
1.5	7.0	16.0	4.00	130
1.5	9.0	18.0	4.00	130
2.0	10.0	20.0	4.00	145
1.5	22.0	30.0	5.25	275
1.5	22.0	31.0	3.50	200
1.5	26.0	36.0	4.50	250

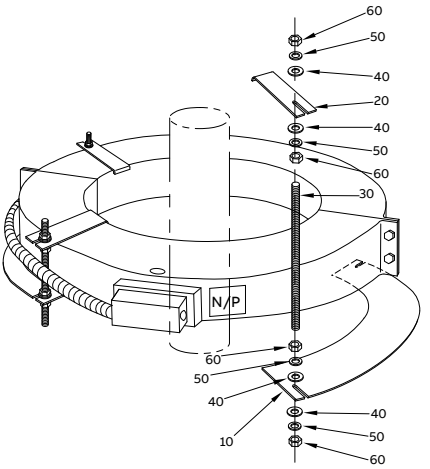

Legend:

10 Bottom mounting bracket
20 Top mounting bracket
30 5/8-11 threaded rod
40 5/8" flat washer
50 5/8" lock washer
60 5/8-11 hex nut

SCADA-BEH

600 Volts
Indoor
10 kV BIL
60 Hertz

Primary amps	Style number	Accuracy/ burden
100	A370100S47-570	± 10% - 2.5 VA
150	A370150S47-570	± 10% - 2.5 VA
200	A370200S47-570	± 5% - 2.5 VA
250	A370250S47-570	± 5% - 2.5 VA
300	A370300S47-570	± 3% - 2.5 VA
300 MR	A370300M47-570	± 2.5% - 2.5 VA
400	A370400S47-570	± 3% - 2.5 VA
450	A370450S47-570	± 3% - 2.5 VA
450 MR	A370450M47-570	± 2.5% - 2.5 VA
500	A370500S47-570	± 3% - 2.5 VA
600	A370600S47-570	± 3% - 2.5 VA
600	A370600S55-570	± 3% - 2.5 VA
600 MR	A370600M55-570	± 2.5% - 2.5 VA
800	A370800S55-570	± 3% - 2.5 VA
1000	A371000S55-570	± 3% - 2.5 VA
1200	A371200S55-570	± 3% - 2.5 VA

MR = multi-ratio

One-second thermal/mechanical ratings:
60 x full winding I_{nom} / unlimited mechanical

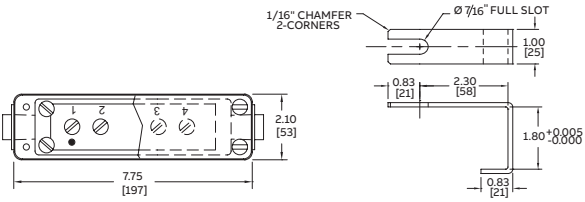

Window diam. (in.)	Rating factor @ 30 °C	Height (in.)	Width (in.)	Length (in.)	Weight (lbs.)
4.75	2.0	10.5	8.0	2.1	8-9
4.75	2.0	10.5	8.0	2.1	8-9
4.75	2.0	10.5	8.0	2.1	8-9
4.75	2.0	10.5	8.0	2.1	8-9
4.75	2.0	10.5	8.0	2.1	8-9
4.75	2.0	10.5	8.0	2.1	8-9
4.75	2.0	10.5	8.0	2.1	8-9
4.75	2.0	10.5	8.0	2.1	8-9
4.75	2.0	10.5	8.0	2.1	8-9
4.75	2.0	10.5	8.0	2.1	8-9
4.75	2.0	10.5	8.0	2.1	8-9
5.50	2.0	10.5	8.0	2.1	8-9
5.50	2.0	10.5	8.0	2.1	8-9
5.50	2.0	10.5	8.0	2.1	8-9
5.50	1.5	10.5	8.0	2.1	8-9
5.50	1.5	10.5	8.0	2.1	8-9

SCADA-DEH

600 Volts
Indoor
10 kV BIL
60 Hertz

Primary current ratios:
50:5 to 4000:5

Primary amps	Style number	Accuracy/burden Metering	Relaying
300 MR	A03S0001-570	-	C10
450 MR	A03S0002-570	-	C15
600	A03S0009-570	0.3B-0.5	–
600 MR	A03S0012-570	-	C25
600	A03S0014-570	0.3B-0.2	–
800 MR	A03S0020-570	-	C30
1200 MR	A03S0018-570	-	C50

MR = multi-ratio. Available in single, dual and multi-ratio designs.

One-second thermal/mechanical ratings:
60 x full winding I_{nom} / unlimited mechanical

SCADA-CEH

600 Volts
Indoor
10 kV BIL
60 Hertz

Available in dual and multi-ratio designs.

Primary amps	Style number	Accuracy/burden Metering*	Relaying
100	A0101S01-570	±10% - 1 VA	-
200	A0102S01-570	1.2B-0.1	-
300	A0103S01-570	0.6B-0.1	C5
400	A0104S01-570	0.3B-0.1	C10
500	A0105S01-570	0.3B-0.2	C15
600	A0106S01-570	±3% - 5 VA	C15
800	A0108S01-570	0.3B-0.5	C20
1000	A0110S01-570	0.3B-0.5	C30
1200	A0112S01-570	0.3B-0.9	C40
1500	A0115S01-570	0.3B-0.9	C50
1600	A0116S01-570	0.3B-0.9	C50
2000	A0120S01-570	0.3B-1.8	C35
2500	A0125S01-570	0.3B-1.8	C40
3000	A0130S01-570	0.3B-1.8	C50
4000	A0140S01-570	0.3B-1.8	C50
5000	A0150S01-570	0.3B-1.8	-
6000	A0160S01-570	0.3B-1.8	-

One-second thermal/mechanical ratings:
60 x full winding I_{nom} / unlimited mechanical

Product bulletin:
1VAP701021-DB

Mounting detail (in. [mm])

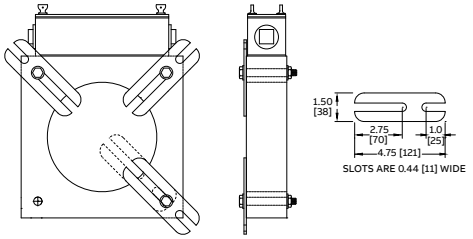

Window diam. (in.)	Rating factor @ 30 °C	Height (in.)	Width (in.)	Length (in.)	Weight (lbs.)
5.75	2.0	11.12	8.50	2.12	16-17
5.75	2.0	11.12	8.50	2.12	16-17
5.75	2.0	11.12	8.50	2.12	16-17
5.75	2.0	11.12	8.50	2.12	16-17
5.75	2.0	11.12	8.50	2.12	16-17
5.75	2.0	11.12	8.50	2.12	16-17
5.75	2.0	11.12	8.50	2.12	16-17

Product bulletin:
1VAP701041-DB

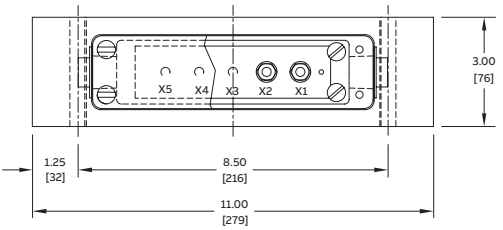

Window diam. (in.)	Rating factor @ 30 °C	Height (in.)	Width (in.)	Length (in.)	Weight (lbs.)
8.13	2.0	13.8	11.0	3.0	20-22
8.13	2.0	13.8	11.0	3.0	20-22
8.13	2.0	13.8	11.0	3.0	20-22
8.13	2.0	13.8	11.0	3.0	20-22
8.13	2.0	13.8	11.0	3.0	20-22
8.13	2.0	13.8	11.0	3.0	20-22
8.13	2.0	13.8	11.0	3.0	20-22
8.13	2.0	13.8	11.0	3.0	20-22
8.13	2.0	13.8	11.0	3.0	20-22
8.13	2.0	13.8	11.0	3.0	20-22
8.13	2.0	13.8	11.0	3.0	20-22
8.13	2.0	13.8	11.0	3.0	20-22
8.13	1.5	13.8	11.0	3.0	20-22
8.13	1.33	13.8	11.0	3.0	20-22
8.13	1.0	13.8	11.0	3.0	20-22
8.13	1.0	13.8	11.0	3.0	20-22
8.13	1.0	13.8	11.0	3.0	20-22

Product bulletin:
1VAP701061-DB

FSR-983

600 Volts
Outdoor
60 Hertz
FERROGUARD™ saturable reactor

The FSR-983 saturable reactor is custom engineered to match the core excitation characteristic of the transformer it is protecting; therefore, it is necessary to provide the secondary excitation characteristics of each protected transformer when specifying this product.

Options:

- Multiple taps available for various voltages or devices
- Non-inductive impedances available to add resistance
- Contact factory for other special needs.

How to specify:
The specific reactor design parameters are selected based on the secondary exciting characteristics of the transformer being protected. This ensures the transformer accuracy and performance is not negatively impacted during normal operation and is appropriately protected during resonant conditions. If the transformer being protected is not an ABB product, secondary excitation characteristics of the transformer being protected are required prior to placing an order.

CUSTOM ENGINEERED DESIGNS
FOR SPECIAL APPLICATIONS

BYZ-863/865

15 and 25 kV
Indoor/outdoor
110 kV and 150 kV BIL
60 Hertz

Select styles listed below.
Contact your ABB representative for additional current ratios.

Note: Zero sequence CTs are custom designed for use in three-phase circuits where all conductors pass through the window. They are also available with two HV insulators for split-phase applications. Contact your ABB representative to discuss other options.

Current ratio	Style number (CT only)	Rating factor @ 30 °C	Phase	Relay class	Weight (lbs)
50:5	D19Z205005	3.0	Split-phase	C50	460
50:5	D19Z305005	3.0	3-phase	C50	475
100:5	D19Z210010	3.0	Split-phase	C100	465
100:5	D19Z310010	3.0	3-phase	C100	480

Current ratio	Style number (CT only)	Rating factor @ 30 °C	Phase	Relay class	Weight (lbs)
50:5	F19Z205005	3.0	Split-phase	C50	475
50:5	F19Z305005	3.0	3-phase	C50	495
100:5	F19Z210010	3.0	Split-phase	C100	480
100:5	F19Z310010	3.0	3-phase	C100	500

PSZ-981

600 Volts
Indoor/outdoor
10 kV BIL
60 Hertz

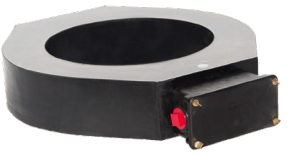

Select styles listed below. Contact your ABB representative for additional current ratios and dimensions.

Zero sequence CTs are custom designed for use in three-phase circuits where all conductors pass through the window of the CT. Contact your ABB representative to discuss other options.

Primary amps	Style number	Relaying accuracy
50	P061682Z5005050	C50
50	P081845Z5005020	C25
50	P102050Z5005020	C25
50	P122245Z5005020	C25
50	P122685Z5005100	C100
50	P162645Z5005020	C25
50	P182845Z5005020	C25
100	P061645Z1015050	C50
100	P122245Z1015050	C50
100	P122285Z101505B	C50//C50
200	P061645Z2015100	C100
200	P142245Z2015050	C50

If secondary junction box is required, add T to the end of the style number.

Unit dimensions (in. [mm])

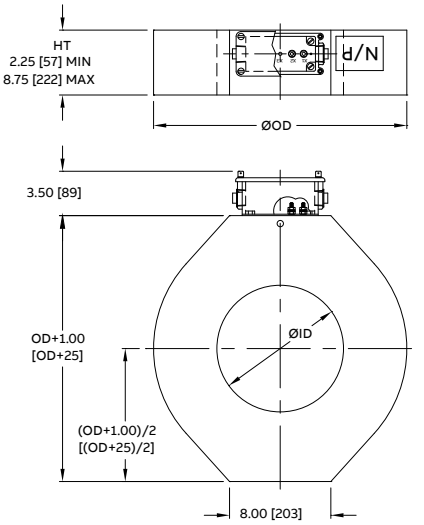

Rating factor @ 30 °C	I.D. (in.)	O.D. (in.)	Height (in.)	Weight (lbs.)
3.0	6.0	16.0	8.25	255
3.0	8.0	18.0	4.50	160
3.0	10.0	20.0	5.00	190
3.0	12.0	22.0	4.50	190
3.0	12.0	26.0	8.50	675
3.0	16.0	26.0	4.50	230
3.0	18.0	28.0	4.50	250
3.0	6.0	16.0	4.50	125
3.0	12.0	22.0	4.50	200
3.0	12.0	22.0	8.50	380
3.0	6.0	16.0	4.50	125
3.0	14.0	22.0	4.50	155

PSH-993

600 volts
Indoor/outdoor
10 kV BIL
60 Hertz

Select styles listed below. Contact your ABB representative for additional current ratios and dimensions.

Primary amps	Style number	Metering accuracy	Relaying accuracy
40	PSH0565S0415050	–	C50
50	PSH1055Z5005025	–	C25 zero-seq
100	PSH0540S1015050	–	C50
200	PSH0655S2015200	–	C200
200	PSH1280Z2015100	–	C100 zero-seq
400	PSH1085S4015400	–	C400
600	PSH0640S6015400	0.3 B1.8	C400
600	PSH0955S6015400	0.3 B1.8	C400
600	PSH0665S6015800	0.3 B1.8	C800
1200	PSH1240S1225100	0.3 B0.9	C100
1200	PSH0955S1225800	0.3 B1.8	C800
2000	PSH1240S2025200	0.3 B1.8	C200
2000	PSH1140S2025400	0.3 B1.8	C400
2000	PSH0940S2025809	0.3 B1.8	C800
2000	PSH1155S2025800	0.3 B1.8	C800
3000	PSH1240S3025200	0.3 B1.8	C200
3000	PSH1240S3025400	0.3 B1.8	C400
3000	PSH1040S3025800	0.3 B1.8	C800
4000	PSH1240S4025200	0.3 B1.8	C200
4000	PSH1240S4025400	0.3 B1.8	C400
4000	PSH1140S4025800	0.3 B1.8	C800
5000	PSH1240S5025200	0.3 B1.8	C200
5000	PSH1240S5025400	0.3 B1.8	C400
5000	PSH1140S5025800	0.3 B1.8	C800
6000	PSH1240S6025200	0.3 B1.8	C200
6000	PSH1240S6025400	0.3 B1.8	C400
6000	PSH1140S6025800	0.3 B1.8	C800
8000	PSH1240S8025200	0.3 B1.8	C200
8000	PSH1240S8025400	0.3 B1.8	C400
8000	PSH1140S8025800	0.3 B1.8	C800

Unit is supplied without a secondary junction box. If a secondary junction box is required, add T to end of style number.

Unit dimensions (in. [mm])

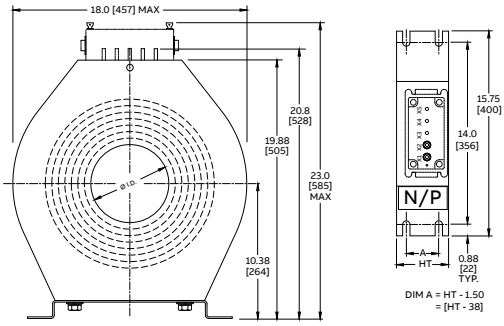

Rating factor @ 30 °C	I.D. (in.)	O.D. (in.)	Height (in.)	Weight (lbs.)
2	5.0	18.0	6.5	275
3	10.0	18.0	5.5	150
2	5.0	18.0	4.0	145
2	6.0	18.0	5.5	225
4	12.0	18.0	8.0	200
2	10.0	18.0	8.5	260
2	6.0	18.0	4.0	150
2	9.0	18.0	5.5	155
2	6.0	18.0	6.5	275
2	12.0	18.0	4.0	60
2	9.0	18.0	5.5	160
2	12.0	18.0	4.0	65
2	11.0	18.0	4.0	90
2	9.0	18.0	4.0	105
2	11.0	18.0	5.5	140
1.5	12.0	18.0	4.0	60
1.5	11.0	18.0	4.0	75
1.5	10.0	18.0	4.0	105
1.5	12.0	18.0	4.0	60
1.5	12.0	18.0	4.0	70
1.5	11.0	18.0	4.0	90
1.5	12.0	18.0	4.0	60
1.5	12.0	18.0	4.0	70
1.5	11.0	18.0	4.0	90
1.5	12.0	18.0	4.0	60
1.5	12.0	18.0	4.0	70
1.5	11.0	18.0	4.0	90
1.33	12.0	18.0	4.0	60
1.33	12.0	18.0	4.0	65
1.33	11.0	18.0	4.0	85

PS-981

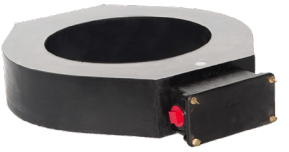

600 Volts
Indoor
10 kV BIL
60 Hertz

The PS-981 is an external slip-over BCT primarily used to fit over HV bushings but can also be fitted over bus and cables. Numerous mounting options are available. Units are custom engineered for application-specific installations and are made to order. Contact your ABB representative for more options.

I.D.	O.D. range (in.)																		
(in.)	14	16	18	20	22	24	26	28	30	32	34	36	38	40	42	44	46	48	50
6	/	•	/	/	/	/	/												
8	/	•	•	/	/	/	/	/											
10		•	•	•	/	/	/	/	/										
12			•	•	•	•	/	/	/	/									
14				/	•	•	•	/	/	/	/								
16					/	•	•	•	/	/	/	/							
18						•	•	•	•	/	/	/	/						
20							/	•	•	•	/	/	/	/					
22								•	•	•	•	/	/	/	/				
24									/	/	•	•	/	/	/	/			
26										/	/	•	/	/	/	/	/		
28											/	/	•	/	/	/	/	/	
30												/	/	•	/	/	/	/	/
32													/	/	•	/	/	/	/
34														/	/	•	/	/	/
36															/	/	•	/	/
38																/	/	•	/
40																	/	•	•
44																		/	•

/ = available size • = common size Shaded area = not available in that size

The PS-981 is primarily used for protection purposes. The matrix above shows the range of available O.D. based on selection of I.D. There is a wide variety of available sizes and this table provides a close approximation of slip-over size based on ratio and required class. The actual size is determined by ABB.

How to use the matrix above:

- Select the physical size of the slip-over: I.D. x O.D.
- Calculate the build up (BU): (O.D. - I.D.) / 2
- Select the current ratio and protection class desired from the HT table, then select the HT based on your calculated BU. Now you have I.D. x O.D. x HT.

If HT is too much, then determine a new BU and select a new I.D. and O.D. associated with that BU, where O.D. = I.D. + (2 x BU).

This matrix can also be used for dual-cores. Use the same steps, except that HT1 + HT2 < 9. Ratios may be the same or can be different depending on application.

There is a manufacturing weight restriction, so it is possible that a design may work in the matrix but, due to its weight, cannot be produced.

Additional ratios and protection classes available. ABB will assist in the proper selection of slip-over size and mounting, provided that apparatus drawings and OEM bushing drawings are provided. Contact your ABB representative for more information.

Unit dimensions (in. [mm])

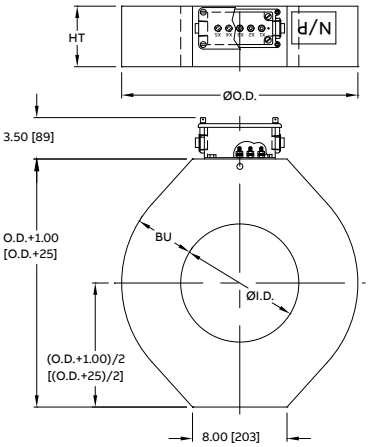

Primary	Relay class	HT dimension by BU (build up) of CT [O.D. - I.D.]/2 (in.) 3"	4"	5"	6"	7"	8"
200	C10	2.5					
	C25	3.5	3.0	2.75	2.25		
	C50	5.75	4.0	3.5	3.0	2.75	
	C100	8.75	6.5	5.25	4.5	4.0	3.5
	C200		8.75	7.5	6.0	5.5	5.25
	C400						8.5
400	C25	2.5					
	C50	4.25	2.75	2.25			
	C100	5.75	4.0	3.0	2.75		
	C200	8.75	5.75	4.5	4.0	3.5	
	C400		8.75	7.0	6.0	5.5	5.0
	C800					8.5	7.25
600	C50	3.25	2.5				
	C100	4.25	3.0	2.75	2.5		
	C200	6.0	4.5	3.5	3.0		
	C400		6.5	5.0	4.25	4.0	3.5
	C800			8.5	7.0	6.0	5.0
1200	C100	2.75	2.5	2.25			
	C200	4.0	3.0	2.5	2.5		
	C400	6.0	4.0	3.5	3.0	2.75	
	C800		6.5	5.0	4.25	3.75	
2000	C200	3.5	2.75	2.5			
	C400	5.0	3.0	2.75	2.5		
	C800	7.0	5.0	3.75	3.5	3.0	
3000	C200	3.0	2.5	2.25			
	C400	3.5	3.0	2.75	2.5		
	C800	5.0	4.0	3.5	3.5	2.75	
	C1200	7.25	4.75	4.0	3.5	3.0	
4000	C200	2.75	2.25	2.25			
	C400	3.5	2.5	2.5			
	C800	5.5	3.5	3.0	2.5		

Note: HT dimensions above are typical; actual HT may vary depending on ratio, class and size. Shaded areas indicate a unit is not available in that size configuration.

CUSTOM ENGINEERED DESIGNS
FOR SPECIAL APPLICATIONS

Product bulletin:
1VAP701261-FL

PH-982

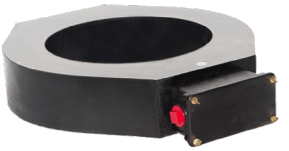

600 Volts
Outdoor
10 kV BIL
60 Hertz

The PH-982 is part of ABB's AccuRange® current transformer portfolio of products with 0.15% accuracy from 1% of nominal current through rating factor.

The PH-982 ACCUSlip™ is an external slip-over CT that provides high accuracy extended range metering duty. It is available in single ratio (SR) and dual ratio (DR) ONLY and is not suitable for use in protection schemes, nor does it have a protection class rating.

Additional ratios and metering classes are available. ABB will assist in the proper selection of slip-over size and mounting, provided that apparatus drawings and OEM bushing drawings are provided. Contact your ABB representative for more information.

I.D. x O.D.	150:5	200:5	300:5	400:5-600:5	800:5 and up
6 x 16	0.3SB-0.2 0.3B-0.5	0.15SB-0.2 0.3B-0.5	0.15SB-0.2 0.3B-0.5	0.15SB-0.5 0.3SB-0.9 0.3B-1.8	0.15SB-0.9 0.3SB-1.8
8 x 18					
10 x 20					
12 x 22					
14 x 24					
16 x 26					
18 x 28					
20 x 30					
22 x 32					
24 x 34		0.3B-0.5	0.3B-0.5		
26 x 36					
28 x 38					
30 x 40		0.3B-0.2			
32 x 42					
34 x 44					

The I.D. x O.D. is typical; other combinations are available. Refer to PS-981 for sizing details. Rating factor (RF) is typically 4.0 up to 1200:5, then drops to 3.0 up to 2000:5, and 2.0 beyond that.

This matrix serves as an approximation of metering performance for a slip-over CT size, based on current ratio and physical size. Height varies by ratio and size.

The accuracy for 0.15S and 0.3S is maintained from RF down to 5% rated current. In some cases, the accuracy may be held to 1%, or may experience higher class. It is also possible that the class will worsen at lower currents as the I.D. x O.D. increases. This is a targeted guide and is no guarantee of performance in all cases.

CUSTOM ENGINEERED DESIGNS
FOR SPECIAL APPLICATIONS

Product bulletin:
1VAP701331-DB

PSG-981

600 Volts
Indoor/outdoor
10 kV BIL
60 Hertz

Primary current ratios:
Available up to 50000:5

Insulation class: 130 °C

These designs are internally shielded to minimize the effects of stray magnetic flux produced in adjacent and return conductors when high line currents are present.

Contact your ABB representative for a style number based on specific physical size, ratio and class requirements.

Dim A (in.) ID range	Dim B (in.) width x length	Dim D (in.) overall height	Dim E (in.) mounting hole center	Dim B.C. (in.) mounting hole
9–12	17 x 17	20.0	13.79	19.50
12–14	19.5 x 21	24.5	15.56	22.00
10.5–15	21 x 21	24.5	18.00	25.46
15–18	23 x 23	27.0	18.50	26.16
16–18	24 x 25	29.0	18.50	26.16
16–18	25 x 25	29.0	18.50 19.62 20.00	26.16 27.75 28.28
18–22	29 x 29	33.0	21.70	30.69
22–25	31 x 31	35.0	23.94	33.86
22–25	32 x 32	36.0	24.00	33.94
24–26	33 x 33	37.0	24.41	34.52
24–28	35 x 35	39.0	25.98 28.12	36.74 39.77
28–32	39.38 x 39.38	42.5	30.63	43.31

Unit dimensions

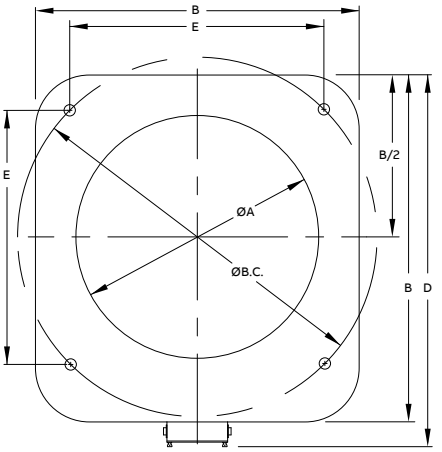

CUSTOM ENGINEERED DESIGNS
FOR SPECIAL APPLICATIONS

GCT-848

600 Volts
Indoor
60 Hertz

Primary current ratios:
Available up to 50000:5

GCT-802: coil only with no mounting board

GCT-848: board-mounted coil (pictured above)

HW-945: pre-assembled GCT-848s in (2) to (5) stack arrays

Dim A (in.) ID	Dim B (in.) OD width	Dim D (in.) OD depth	Dim C (in.) center location	Dim B.C. (in.) mounting hole
9.25	17.25	21.38	8.63	18.47
10.00	14.50	15.00	7.25	15.56
10.00	17.00	21.70	8.50	18.38
10.50	18.50	22.50	9.25	20.33
10.50	21.00	25.50	10.50	25.46
12.75	19.00	24.00	9.60	20.63
12.75	35.44	39.91	17.72	14.96
13.50	19.00	23.13	9.50	22.63
15.50	24.00	29.00	12.00	26.16
15.50	24.75	29.75	12.75	29.88
16.00	24.00	28.03	13.03	28.32
17.00	31.50	36.75	15.75	33.69
20.00	29.00	29.00	14.50	31.11
20.00	30.00	32.00	15.00	33.94
20.00	39.00	38.80	19.50	36.22
20.50	36.00	39.50	18.00	39.77
25.00	31.75	35.25	15.88	33.75
26.00	32.00	36.00	16.00	33.75
26.50	36.00	47.50	22.00	39.77
27.00	36.00	41.13	18.25	38.18
28.00	39.00	46.00	20.50	41.75
28.00	44.25	50.16	23.23	46.75
28.75	36.00	38.00	18.81	39.78
30.50	44.25	50.16	23.23	46.75
32.00	43.00	50.25	22.00	46.75

Unit dimensions

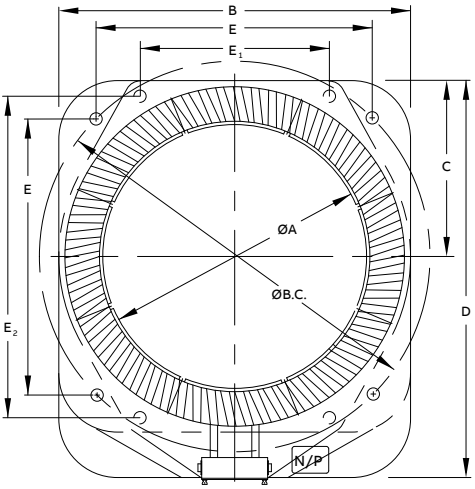

Dim E / E1 x E2 (in.) mounting hole (center to center)	Original OEM style
13.06	GE 235C3744
11.00	ABB 7526A78610
13.00	Westinghouse 30-A-8725
14.38	GE 235C3745
18.00	Siemens S2R2 Aeropak
14.58	Westinghouse 30-A-8724 w/mtg brkts
(4) in ID	Alstom
16.00	OEM 23C6099BK
18.50	GE 224C5195 & 245C5625
21.75 x 20.50	GE 233C1093
19 x 21	GE 1925693-2, Type CTR-OY
23.82	-
22.00	-
24.00	Westinghouse 155C7695
Circular	Round
28.12	Dual-coils, Westinghouse 891D782 & 383D623
23.86	GE 4194C73
23.88	Westinghouse 46A5195, offset TB
28.12	-
27.00	GE 224C5198
20.88 x 36.16	Westinghouse 383D567 / 5618D12/D71, 7316D43/D44
23.38 x 40.49	Westinghouse 5614D23/D24
28.13	Westinghouse 383D623
23.38 x 40.49	Westinghouse 5603D03 / 5609D13
23.38 x 40.49	Siemens 2269J99

DISTRIBUSENSE® SENSORS

VCS-110

15 kV
Outdoor
110 kV BIL
60 Hertz
Combination current and voltage line post sensor

Product details	
System voltage (L-L)	15 kV
BIL	110 kV
Voltage	
Accuracy	<1%
Load instrument impedance	1 MΩ
Phase error	<1.5°
Current	10 V output
Accuracy	±1% from 1.6% to 200% of rated current (10–1200 A)
Standard ratios*	600 A:10 V
Phase error	<1.5°
Frequency	60 Hz
Insulating material	HCEP
Strike	8.9" (226 mm)
Creep	22.2" (564 mm)
Weight	35 lbs. (16 kg)
Cantilever strength	2800 ft-lbs.
Temperature range	-50 °C to 70 °C
Power frequency withstand	34 kV
Installation	Live wire mountable
Conductor range	#4 AWG–600 MCM
Mounting	Vertical or cantilever
Connector	Amphenol
Cable length	Up to 49' (15 m)

* Custom ratios, connectors, cables and more are available upon request.

Note: Stated accuracies are given without correction factors; using correction factors will improve accuracy.

Note: Performance is optimized with cable length provided from the factory. Cutting or using a different cable can impact accuracy. Contact factory before modifying the cable.

Primary volts	Secondary volts	Voltage ratio
7200	120	60:1
7620	120	63.5:1
8400	120	70:1
7200–8400	5.14–6	1400:1

Unit dimensions (in. [mm])

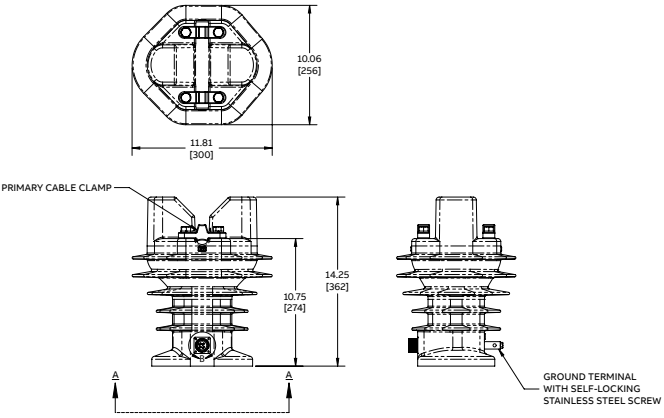

View A

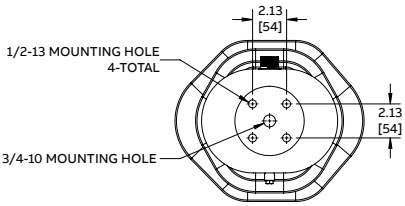

Style number: 5 meter cable	Style number: 10 meter cable	Style number: 15 meter cable
E-923A594G01	E-923A595G01	E-923A596G01
E-923A594G02	E-923A595G02	E-923A596G02
E-923A594G03	E-923A595G03	E-923A596G03
E-923A594G05	E-923A595G05	E-923A596G05

VKS-110

15 kV
Outdoor
110 kV BIL
60 Hertz
Current line post sensor

Characteristic	Value
System voltage (L-L)	15 kV (IEC: 17.5 kV)
BIL	110 kV
Load instrument impedance	1 MΩ
Current	10 V output
Accuracy	±1% from 1.6% to 200% of rated current (10–1200 A)
Standard ratios*	600 A:10 V
Frequency	60 Hz (IEC: 50 Hz)
Insulating material	HCEP
Strike	8" (203 mm)
Creep	20.25" (514 mm)
Weight	33 lbs. (15 kg)
Cantilever strength	2800 ft-lbs.
Temperature range	-50 °C to 70 °C
Power frequency withstand	34 kV
Installation	Live wire mountable
Conductor range	#4 AWG–600 MCM
Mounting	Vertical only
Connector	Amphenol
Cable length	Up to 49' (15 m)

* Custom ratios, connectors, cables and more are available upon request.

Note: Stated accuracies are given without correction factors; using correction factors will improve accuracy.

Note: Performance is optimized with cable length provided from the factory. Cutting or using a different cable can impact accuracy. Contact factory before modifying the cable.

Current ratio	Style number: 5 meter cable	Style number: 10 meter cable	Style number: 15 meter cable
600 A:10 V	E-923A669G01	E-923A670G01	E-923A671G01

Unit dimensions (in. [mm])

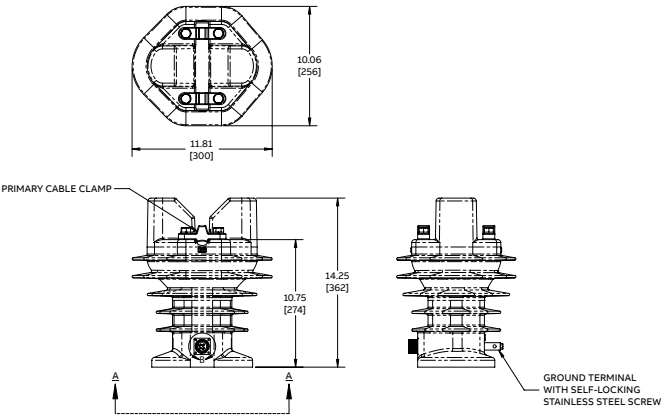

View A

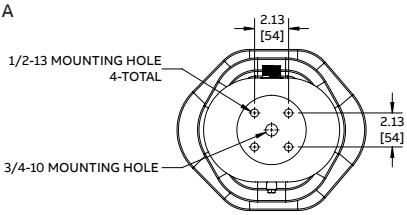

VLS-110, -150 and -200

15–35 kV
Outdoor
110–200 kV BIL
60 Hertz
Voltage sensors

Characteristic	VLS-110
System voltage class (L-L)	15 kV
BIL	110 kV
Accuracy	<1%
Standard ratios*	60:1, 63.5:1, 70:1
Frequency	60 Hz
Insulating material	HCEP
Load instrument impedance	1 MΩ
Height	11.34" (288 mm)
Diameter	5.91" (150 mm)
Strike	9.7" (246 mm)
Creep	20.3" (515 mm)
Weight	10 lbs. (4.5 kg)
Temperature range	-40 °C to 85 °C
Power frequency withstand	34 kV
Standard cable lengths**	16.4' (5 m), 32.8' (10 m) or 49.2' (15 m)

* Custom ratios available upon request

** Contact the factory for additional cable lengths

Note: Performance is optimized with cable length provided from the factory. Cutting or using a different cable will impact accuracy. Contact your ABB representative before modifying the cable.

Note: Stated accuracies are given without correction factors; using correction factors will improve accuracy.

Type	Primary volts	Secondary volts	Voltage ratio
VLS-110	7200	120	60:1
VLS-110	7620	120	63.5:1
VLS-110	8400	120	70:1
VLS-150	12000	120	100:1
VLS-150	13200	120	110:1
VLS-150	14400	120	120:1
VLS-150	12000–14400	5.1–6	2200:1
VLS-200	16092	120	134.1:1
VLS-200	16800	120	140:1
VLS-200	19920	120	166:1
VLS-200	20125	120	167.7:1
VLS-200	19920–20125	4	5000:1

Product bulletins:
VLS-110: 1VAP500001-DB
VLS-150: 1VAP500005-DB
VLS-200: 1VAP500006-DB

VLS-150	VLS-200
25 kV	35 kV
150 kV	200 kV
<1%	<1%
100:1, 110:1, 120:1, 2200:1	134.1:1, 140:1, 167.7:1, 5000:1
60 Hz	60 Hz
HCEP	HCEP
1 MΩ	1 MΩ
16.26" (413 mm)	20.59" (523 mm)
5.91" (150 mm)	6.69" (170 mm)
14.4" (366 mm)	19.2" (488 mm)
33.3" (847 mm)	47.5" (1207 mm)
15 lbs. (6.8 kg)	21 lbs. (9.5 kg)
-40 °C to 85 °C	-40 °C to 85 °C
50 kV	70 kV
16.4' (5 m), 32.8' (10 m) or 49.2' (15 m)	16.4' (5 m), 32.8' (10 m) or 49.2' (15 m)

Style number: 5 meter cable	Style number: 10 meter cable	Style number: 15 meter cable
E-923A527G01	E-923A526G01	E-923A523G01
E-923A527G02	E-923A526G02	E-923A523G02
E-923A527G03	E-923A526G03	E-923A523G03
E-923A539G01	E-923A541G01	E-923A542G01
E-923A539G02	E-923A541G02	E-923A542G02
E-923A539G03	E-923A541G03	E-923A542G03
E-923A623G01	E-923A624G01	E-923A625G01
E-923A549G01	E-923A550G01	E-923A551G01
E-923A549G02	E-923A550G02	E-923A551G02
E-923A549G03	E-923A550G03	E-923A551G03
E-923A549G04	E-923A550G04	E-923A551G04
E-923A549G05	E-923A550G05	E-923A551G05

RSS-1

600 Volt, 10 kV BIL
Outdoor
60 Hertz
Submersible current sensor

UL Recognized component

Characteristic	Value
Style number	E-923A613G01
Rated voltage, Vr	600 volt
Rated current	600 A
Output ratio	600 A:10 V
Continuous current rating factor	2.0
Applied voltage test	4 kV
Lightning impulse withstand voltage	10 kV full wave
Rated frequency	60 Hz
Operating temperature range	-30 °C to +85 °C
Temperature rise	55 °C max at rating factor
Current accuracy	±1% maximum error in operating temperature range from 60 A to 4000 A
Cable – jacketed UL type TC	Diameter: 14 AWG; Length: 75 feet (23 meters)
Weight (per unit)	Sensor: 5.5 lbs. (2.5 kg); Sensor and cable (max): 10 lbs. (4.5 kg)
Enclosure rating	NEMA Type 6P / IP68W compliant; Submersion depth up to 6.5 feet (2 meters)
Application rating	Fully compliant with NEC requirements for Class 1, Division 2 application

Unit dimensions (in. [mm])

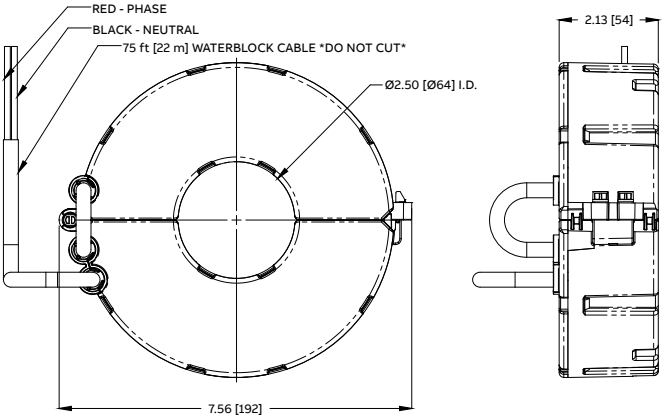

KECA 80 C85

Indoor current sensor

UL Listed, UL Recognized,
cUL Recognized (Canada)

Characteristic		Value
Rated primary current, I_{pr}		80 A
Rated transformation ratio, K_{ra}		80 A/0.180 V at 60 Hz
Rated secondary output, U_{sr}		3 mV/Hz (i.e., 180 mV at 60 Hz)
Rated continuous thermal current (rating factor), I_{cth}		4000 A
Rated short-time thermal current, I_{th}		85 kA/3 s
Rated dynamic current, I_{dyn}		230 kA
Rated frequency, f_r		60 Hz
Rated extended primary current K_{pcr}		50
Accuracy class		0.5/5P
Rated burden (input impedance), R_{br}		10 MΩ
Weight		0.6 lbs. (0.27 kg)
Temperature category	Operation	- 25 °C/+80 °C
	Transport and storage	- 40 °C/+80 °C
Cable	Available lengths (meters)	2.2; 3.4; 5
	Connector	RJ-45 (CAT-6)

Sensor cable length	Style number
2.2 meters	1VL5400056V0201
3.4 meters	1VL5400056V0203
5 meters	1VL5400056V0204
Accessories	
Clamping system (rotary clamps, four pieces, cable tie one piece). Use only if original rotary clamps have been damaged.	1VL5300808R0101

Unit dimensions (in. [mm])

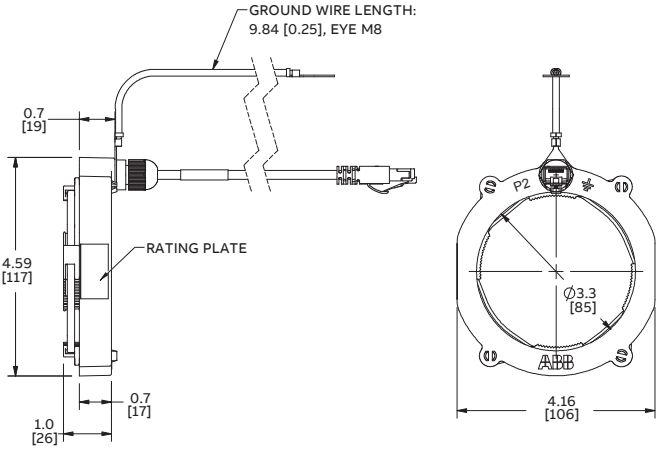

KECA 80 D85

Indoor current sensor

UL Listed, UL Recognized,
cUL Recognized (Canada)

Characteristic		Value
Rated primary current, I_{pr}		80 A
Rated transformation ratio, K_{ra}		80 A/0.180 V at 60 Hz
Rated secondary output, U_{sr}		3 mV/Hz (i.e., 180 mV at 60 Hz)
Rated continuous thermal current (rating factor), I_{cth}		4000 A
Rated short-time thermal current, I_{th}		85 kA/3 s
Rated dynamic current, I_{dyn}		230 kA
Rated frequency, f_r		60 Hz
Rated extended primary current factor, K_{pcr}		50
Accuracy class		0.5/5P
Rated burden (input impedance), R_{br}		10 MΩ
Weight		0.55 lbs. (0.25 kg)
Temperature category	Operation	- 25 °C/+80 °C
	Transport and storage	- 40 °C/+80 °C
Cable	Available lengths	5 meters
	Connector	RJ-45 (CAT-6)

Sensor	Style number
KECA 80 D85	1VL5400076V0201

Unit dimensions (in. [mm])

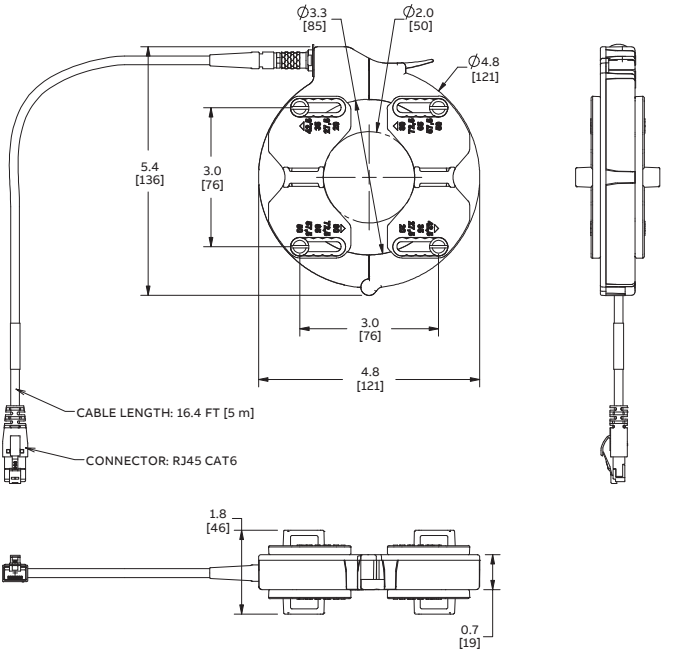

KECA 80 C184

Indoor current sensor

UL Listed, UL Recognized,
cUL Recognized (Canada)

Characteristic		Value
Rated primary current, I_{pr}		80 A
Rated transformation ratio, K_{ra}		80 A/0.180 V at 60 Hz
Rated secondary output, U_{sr}		3 mV/Hz (i.e., 180 mV at 60 Hz)
Rated continuous thermal current (rating factor), I_{cth}		4000 A
Rated short-time thermal current, I_{th}		85 kA/3 s
Rated dynamic current, I_{dyn}		230 kA
Rated frequency, f_r		60 Hz
Rated extended primary current factor, K_{pcr}		50
Accuracy class		0.5/5P
Rated burden (input pedance), R_{br}		10 MΩ
Weight		1.43 lbs. (0.65 kg)
Temperature category	Operation	- 25 °C/+80 °C
	Transport and storage	- 40 °C/+80 °C
Cable	Available lengths	5 meters
	Connector	RJ-45 (CAT-6)

Sensor	Style number
KECA 80 C184	1VL5400072V0201

Unit dimensions (in. [mm])

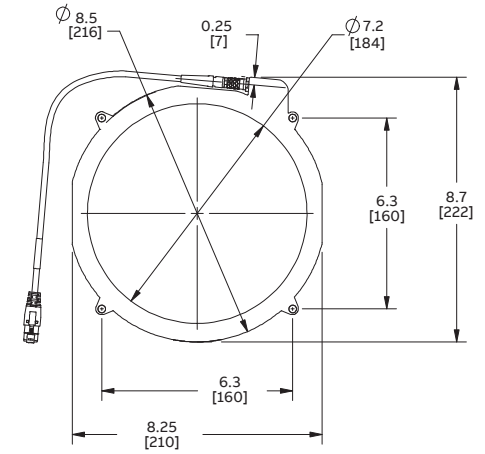

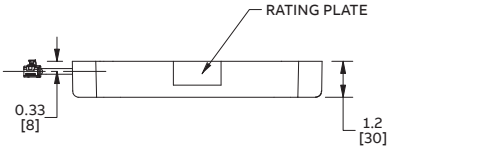

DISTRIBUSENSE® SENSORS

KEVA 17.5 B21

Indoor voltage sensor

UL listed

Characteristic		Value
Rated primary voltage		17.5/√3
Highest voltage for equipment U_m		17.5 kV
Rated power frequency test voltage		38 (42) kV
Rated lighting impulse test voltage, BIL		95 kV
Rated frequency, f_r		50/60 Hz
Accuracy class		0.5/3P
Rated burden (input impedance), R_{br}		10 MΩ
Rated transformation ratio, K_n		10000:1
Rated voltage factor, K_u		1.9/8 h
Weight		4.3 lbs (2.0 kg)
Temperature category	Operation	- 25 °C/+80 °C
	Transport and storage	- 40 °C/+80 °C
Cable	Available lengths	5.5 meters
	Connector	RJ-45 (CAT-6)

Sensor	Style number
KEVA 17.5 B21, 5.5 m cable	1VL5400060V0302

Unit dimensions (in. [mm])

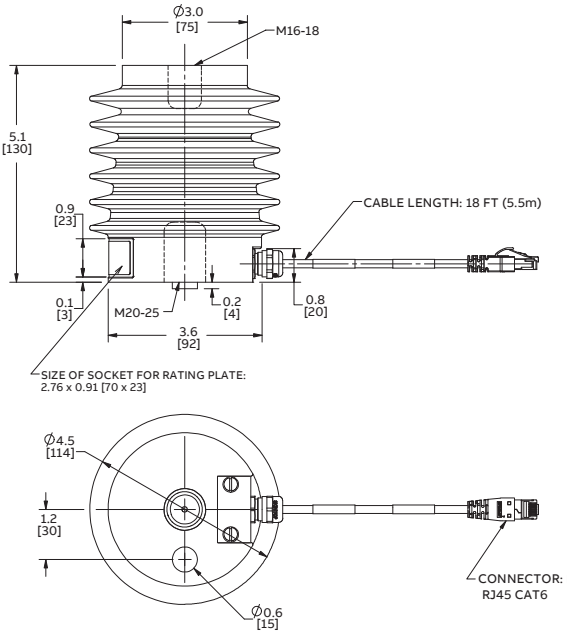

Application data

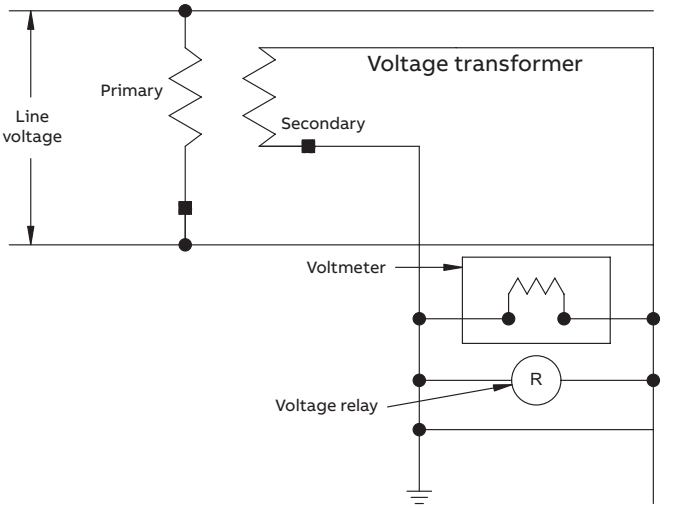

Polarity: Designation of the relative instantaneous directions of the currents entering the primary leads and leaving the secondary leads. When current is flowing toward the marked primary lead, it is flowing away from the transformer in the marked secondary lead.

Instrument transformers isolate meters, relays or other instruments from high voltages and currents and transforms them (i.e., step-down) to values where they can be measured by the instruments.

Instrument transformers are classified as either current transformers or voltage transformers. They are used for revenue and non-revenue metering, protection and control, and for indication.

Current transformers (CT)
The primary windings of current transformers are connected in series with the line and their secondaries are connected to the current coils or elements of meters, relays or instruments. Standard current transformers typically have a 5 ampere rated secondary.

Each current transformer has specifications based on continuous current, short time current and mechanical stress. There are two accuracy classifications: one for metering and one for relaying. The metering accuracy classification indicates what error in transformation can be expected at normal currents. The relaying accuracy classification indicates what percent accuracy can be expected when the secondary is called upon to induce a certain voltage to operate the protective relay.

The secondary of the current transformer should always be connected to a load (burden) or short circuited. If the secondary is open circuited while the primary is energized, the transformer may develop a dangerously high secondary voltage.

Rating factor: The factor by which the nameplate primary current of a CT is multiplied to obtain maximum primary current that can be carried continuously without exceeding the limiting temperature rise. The accuracy class at the rating factor point should be the same as at nameplate rating.

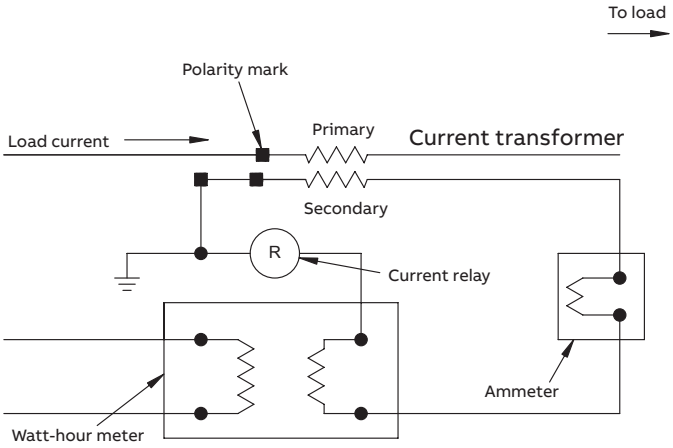

Voltage transformers (VT)
The primary windings of voltage transformers are connected across the line. They step down the line voltage to a value suitable for meters or other instruments to measure, normally 115 volts or 120 volts.

In basic construction, dry-type voltage transformers are much like distribution transformers except that the current and the kVA capacity are lower than for oil-filled power transformers, because the instrument transformer is optimized for accuracy versus power throughput.

Selection
A number of considerations are involved in selecting proper instrument transformers, including system and operating voltages, BIL, load current, rating factor and accuracy class at specified burdens. Physical requirements such as indoor or outdoor installation, window or bar type (for CTs) and window diameter are also important. Many of the transformer types listed in this catalog have some characteristics that are duplicated in other types listed, but each type has its own unique combination of features that best meets the application for which it was designed.

Application data

Ampere capacity of insulated conductors

Single conductor in free air at 30 °C (86 °F)

Size AWG or MCM	Approximate diameter (inches)	Types RUW T TW Cu	Types RUW T TW Al	Types RH RHW RUH THW Cu	Types RH RHW RUH THW Al
6	0.397	80	60	95	75
4	0.452	105	80	125	100
3	0.481	120	95	145	115
2	0.513	140	110	170	135
1	0.588	165	130	195	155
0	0.629	195	150	230	180
00	0.675	225	175	265	210
000	0.727	260	200	310	240
0000	0.785	300	230	360	280
250	0.868	340	265	405	315
300	0.933	375	290	445	350
350	0.985	420	330	505	395
400	1.032	455	355	545	425
500	1.119	515	405	620	485
600	1.233	575	455	690	545
700	1.304	630	500	755	595
750	1.339	655	515	785	620
800	1.372	680	535	815	645
900	1.435	700	580	870	700
1000	1.494	780	625	935	750
1250	1.676	890	710	1065	855
1500	1.801	980	795	1175	950
1750	1.916	1070	875	1280	1050
2000	2.021	1155	960	1385	1150

Calculation of line amps on polyphase circuits

$$\text{Amps} = \frac{\text{Load kVA x 1000}}{\text{1.732 x line-to-line voltage}}$$

Applicable to both 3-phase, 3-wire delta and 3-phase, 4-wire wye.

Required diameter of CT window for multiple conductors

Number of primary conductors	Minimum window diameter
2	2.00 x conductor O.D.
3	2.16 x conductor O.D.
4	2.42 x conductor O.D.
5	2.70 x conductor O.D.

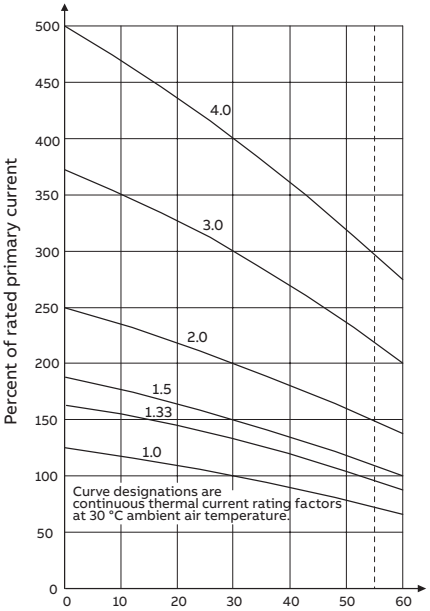

Potential coil (per stator) at the rated voltage. 4.2 VA at 0.18 x PF lagging

Current coil (per stator) 1.1 VA at 0.22 x PF lagging

Resistance of copper secondary wire in ohms per 1000 feet at 68 °F (20 °C).

Wire size	Ohms
14	2.5250
12	1.5880
10	0.9989
8	0.6282

—

Common electrical terms

Term	Abbreviation	Definition
Ampere	I	Unit of current or rate of flow of electricity
Volt	E	Unit of electromotive force
Ohm	R	Unit of resistance
Ohm's law	E	IR
Volt amps	VA	Unit of apparent power = EI (single-phase) = E x I x 1.73 (3-phase)
Kilovolt amps	kVA	= 1000 volt-amps
Watt	W	Unit of true power = VA x p-f = 0.00134 hp
Kilowatt	kW	1000 watts
Power factor	p-f	Ratio of true to apparent power = W/VA or kW/kVA
Watthour	WHr	Unit of electrical work One watt for one hour = 3.413 Btu = 2.655 ft. lbs.
Kilowatt hour	kWHR	= 1000 watthours
Horsepower	hp	Measure of time rate of doing work equivalent of raising 33,000 lbs. 1 ft. in 1 min.= 746 watts
Demand factor		Ratio of maximum demand to the total connected load
Diversity factor		Ratio of sum of individual maximum demands of the various subdivisions of a system to the maximum demand of the whole system
Load factor		Ratio of average load over a designated period of time to the peak load occurring in that period

Accuracy standards

—

Current transformers

The accuracy classification of current transformers for metering service includes a correlation between ratio correction factor and phase angle, to show the overall effect on watthour meter registration. The classification is based on the requirement that the transformer correction factor (the correction for overall error due to both ratio error and phase angle) be within the limits specified. For any particular accuracy class, the ratio correction factor and phase angle must fall within the parallelograms for 100% and 10% current respectively.

Example: The overall correction will never exceed 0.3% at 100% rated current for a transformer in the 0.3 accuracy class. If the ratio correction factor is 1.003, the maximum allowable phase angle is +15.6 minutes. The transformer correction factor is:

$$
\begin{aligned}
{}^{*}TCF &= RCF - \frac{\beta}{2600} \\
&= 1.003 - \frac{15.6}{2600} \\
&= 0.997
\end{aligned}
$$

The corresponding ratio correction factor and phase angle for any point inside the 0.3 class parallelogram for 100% rated current will always give a transformer correction factor between 0.997 and 1.003.

—

Equivalent parallelogram

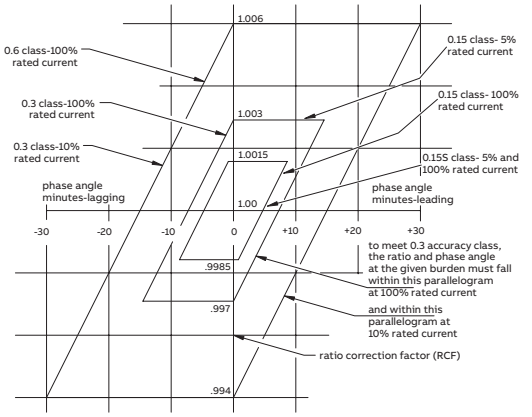

—

Standard burden characteristics (60 Hz and 5 ampere secondary)

Burden designation	Resistance (ohms)	Inductance (millihenrys)	Impedance (ohms)	Volt amps	Power factor
Metering burdens					
E-0.04	0.04	0.0	0.04	1.0	1.0
E-0.2	0.20	0.0	0.20	5.0	1.0
B-0.1	0.09	0.116	0.1	2.5	0.9
B-0.2	0.18	0.232	0.2	5.0	0.9
B-0.5	0.45	0.580	0.5	12.5	0.9
B-0.9	0.81	1.040	0.9	22.5	0.9
B-1.8	1.62	2.080	1.8	45.0	0.9
Relaying burdens					
B-1	0.5	2.3	1.0	25	0.5
B-2	1.0	4.6	2.0	50	0.5
B-4	2.0	9.2	4.0	100	0.5
B-8	4.0	18.5	8.0	200	0.5

Voltage transformers

The accuracy classification of voltage transformers for metering service includes a correlation between ratio correction factor and phase angle, to show the overall effect on watthour meter registration. The classification is based on the requirement that the transformer correction factor (the correction for overall error due to both ratio error and phase angle) be within the limits specified. For any particular accuracy class, the ratio correction factor and phase angle must fall within the parallelogram. These limits apply over the voltage range of ±10% of the rated voltage at rated frequency.

For example, the overall correction will never exceed 0.3% for a transformer in the 0.3 accuracy class. If the ratio correction factor is 1.003, the maximum allowable phase angle is -15.6 minutes. The transformer correction factor is:

$$
\begin{aligned}
*TCF &= RCF + \frac{g}{2600} \\
&= 1.003 + \frac{-15.6}{2600} \\
&= 0.997
\end{aligned}
$$

The corresponding ratio correction factor and phase angle for any point inside the 0.3 class parallelogram will always give a transformer correction factor between 0.997 and 1.003.

Equivalent parallelogram

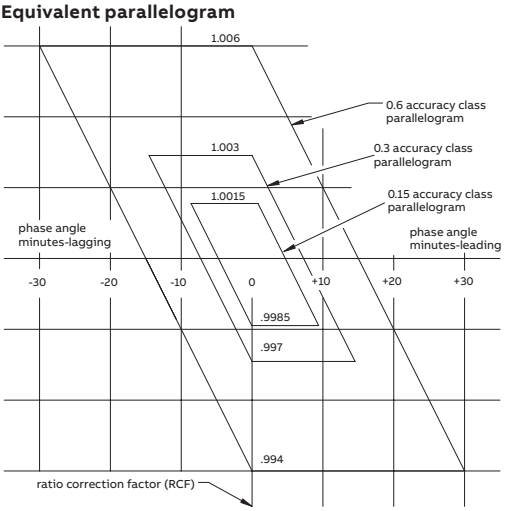

Standard burden characteristics (60 Hz, 120 V and 69.3 V)

Burden designation	Secondary volt-amps	Burden power factor
W	12.5	0.10
X	25.0	0.70
M	35.0	0.20
Y	75.0	0.85
Z	200.0	0.85
ZZ	400.0	0.85

Limits of transformer correction factor (TCF) burdens

Accuracy class	Minimum	Maximum	Limits of power factor of metered load-lagging	
			Minimum	Maximum
1.2	0.988	1.012	0.6	1.0
0.6	0.994	1.006	0.6	1.0
0.3	0.997	1.003	0.6	1.0

Instrument transformer type designations

ABB instrument transformers and sensors follow type designations to help customers quickly understand key product attributes and ensure proper product selection. While there are some exceptions, including ABB designs acquired from the former Kuhlman Electric Corporation, most high-volume products in the North American portfolio for ANSI/IEEE markets follow the type designations below.

—

600 volt instrument transformers

	Character	**1**	**2**
Description	**Type**	**Rating and type**	**Window size**
Current transformer (CT)	IMC CSF CBT/1 CSH CBT-H CMS CBT-S CLC CMV CLC-S CMV-S CLE CMF RLC CMF-S	**I** = Current transformer, 600 volt, indicating **C** = Current transformer, 600 volt, metering **R** = Current transformer 600 volt, relaying	**S** = Small, 1"–2" **M** = Medium, 2"–5" **L** = Large, 5"–8.25" **G** = Extra large, > 8.25" **B** = Bar
Voltage transformer (VT)	PPM PPX PPW PPD	**P** = Voltage transformer, 600 volt	**P** = Performance

—

5–25 kV instrument transformers

	Character	**1**	**2**
Description	**Type**	**Rating and type**	**Indoor or outdoor**
Current transformer (CT)	KIR-60, 11 KIT-60, 11 KOR-60, 11 KON-11 KOR-15 KOT-60, 11 KOTD-110	**K** = Current transformer, > 600 volt	**I** = Indoor **O** = Outdoor
Voltage transformer (VT)	VIY-60 VOY-60 VIZ-75, 11 VOZ-75, 11 VOG-11 VOZ-15 VIZZ-15 VRO-150	**V** = Voltage transformer, > 600 volt	**I** = Indoor **O** = Outdoor **R** = ResiVolt
CT/VT combo	CVC	**C** = Combination, > 600 volt	**V** = Voltage

3					4–5
(S-C-A-L-E gives closer approximation of window size in inches)					
S	**C**	**A**	**L**	**E**	**H** = Includes 0.5 ohm burden **S** = ABB AccuRange® CT: 0.15S accuracy class (0.15% accy from 1% I_{nom} to rating factor)
1.0"	1.25"	1.5"	1.75"	2.0"	
2.0"	2.5"	3.25"	4.0"	5.0"	
5.0"	5.5"	6.5"	7.5"	8.25"	
F = Family of window sizes (Ex: CMF with 2.5" and 3¹⁄₁₆" windows) **H** = Includes 0.5 ohm burden **T** = Thru type **V** = Oval					
Burden: **W**: 0.3 accuracy to 12.5 VA; **X:** 0.3 to 25 VA; **M**: 0.3 to 35 VA					

3		4–5	6–7
N = 0.3B-0.5 **P** = 0.3B-0.9 **R** = 0.3B-1.8 **T** = Thru type	0.3 = 0.3% accy to RF, 0.6% @ 10% I_{nom} B-0.5 = Up to 0.5 ohm burden (impedance) B-0.9 = Up to 0.9 ohm burden (impedance) B-1.8 = Up to 1.8 ohm burden (impedance)	**60** = 60 kV BIL **75** = 75 kV BIL **95** = 95 kV BIL **11** = 110 kV BIL **12** = 120 kV BIL **15** = 150 kV BIL **20** = 200 kV BIL **110** = 110 kV BIL **150** = 150 kV BIL **200** = 200 kV BIL	**B** = B series (Gen 2) **C** = C Series (Gen 3) **E** = 0.15 accuracy class (0.15% accy from 100% I_{nom} to rating factor, 0.3% from 5% to I_{nom} **ER** = ABB AccuRange® CT: 0.15S accuracy class (0.15% accy from 1% I_{nom} to rating factor) **HA** = Same accuracy and range as ER, with reduced burden and higher rating factor **G** = Line-to-ground **M** = Modified, one bushing **R** = ABB ResiVolt™ Technology: very fast transient (VFT) resistant
G = Single bushing, line-to-ground Burden: **Y** = 0.3 accuracy to 12.5 VA **Z** = 0.3 accuracy to 200 VA **ZZ** = 0.3 accuracy to 400 VA **O** = Outdoor			
C = Current			

Instrument transformer type designations

—

600 volt instrument transformers

Type	Character 1	Character 2–3
ACT-633 ACT-645 APT-646 APT-733	**A** = Auxiliary	**CT** = Current transformer **PT** = Voltage transformer
GCT-802 GCT-848	**G** = Generator	**CT** = Current transformer
PS-981 PH-982 PSH-983 PSG-981	**P** = Polyurethane	**S** = Slip-over CT **H** = High accuracy slip-over CT **SH** = Standing high, upright base mounted **SG** = Slip-over generator CT
RMB-644	**R** = Round ID	**MB** = With mounting features in block OD
SP-061	**S** = Split-core	**P** = Polyurethane slip-over CT

Sensor type designations

—

Sensors

	Character	1	2
Description	**Type**	**Output**	**Input/application**
Outdoor	RSS VCS VKS VLS	**R** = Relaying **V** = Voltage	**L** = Line **S** = Submersible **C** = Combination **K** = Current
Indoor	KECA 80 C85 KECA 80 C184 KECA 80 D85	**KECA** = Current	**80** = Rated primary current
	KEVA 17.5 B21	**KEVA** = Voltage	**17.5** = Voltage class

—

15–35 kV instrument transformers

Prefix	Voltage class	Suffix		
LG (standard accuracy)	**15** = 15 kV, 110 kV BIL	**585**	=	4.5" ID post type, small frame
		879	=	4.5" ID post type, large frame
LGX (high accuracy)	**25** = 25 kV, 150 kV BIL	**6513**	=	8.75" ID post type, large frame
		683	=	4.5" ID, square frame
	34 = 34 kV, 200 kV BIL	**051**	=	4.5"/8.75" standard, upright
		051W	=	4.5"/8.75" large, upright

3	4–6
S = Sensor	**-110** = 110 kV BIL **-150** = 150 kV BIL **-200** = 200 kV BIL **-1** = Series 1
C = Circular core **D** = Split core	**85** = Inner opening diameter in mm **184** = Inner opening diameter in mm
B21 = Cable outlet on side rather than bottom	

Competitor cross reference

ABB	GE	Ritz	Itron
600 Volt current transformers			
IMC	JCH-0C	–	–-
CBT/1	JGT-0C	DCAB	R6BA
CBT-H	JCM-0C		R6B
CSF	JCR-0C	DCBW	R6SA
CSH	JCW-0C	–	R6S
CMF	JAK-0C	DCCW, DCCB	R6M
CMV/CMV-Hi Temp	JAB-0C	DCDW/DCDW-HT	R6P
CLC	JAD-0C	DCEW/DCEB	R6L
CLE	JCD-0C	–	–
RLC	JCP-0C	–	–
600 Volt voltage transformers			
PPW	–		T5R
PPM	JVA-0 (0.3M only)		T6R

ABB	GE	Ritz
5–34.5 kV current transformers		
KIR-60	JKM-3	–
KIR-75	JKM-4	–
KIR-11, 11E	JKM-5, 5A	–
KOR-60, 75	JKW-3, 4	–
KOR-11	JKW-5	GIFU 15-01
KON-11	JCK-5	GIFU 15-01L
KOR-15C	JKW-6	GIFU 25-01
KOT-60, 75, 11	JCD-3, 4, 5	–
KIT-60, 75, 11	JCM-3, 4, 5	–
KOR-20	JKW-7	GIFS 36-55, GIF 36-68
KOTD-110, 150, 200	JKW-150, 200	GIFD 25-03
5–34.5 kV voltage transformers		
VIY-60	JVM-3	–
VIZ-75, 11	JVM-4, 5	–
VOY-60	JVW-3	–
VOY-11B	JVW-110	–
VOZ-75B, 11B	JVW-4, 5	–
VOG-11	JVW-110	–
VOZ-11G	JVW-5	–
VOY-15, VOG-15B	JVW-6	–
VOY-20, VOG-20B, VOG-20BR	JVW-7	–
VOZZ-15, 20	JVT-150, 200	–
VOZZ-15G, 20G	JVS-150, 200	–

Note: ABB units listed above may not be exact substitutions.
Contact your ABB representative for detailed comparison information.

ABB Inc.
3022 NC 43 North
Pinetops, NC 27864
Phone +1 252 827 3212
Fax +1 252 827 4286
abb.com/mediumvoltage

The information contained in this document is for general information purposes only. While ABB strives to keep the information up to date and correct, it makes no representations or warranties of any kind, express or implied, about the completeness, accuracy, reliability, suitability or availability with respect to the information, products, services, or related graphics contained in the document for any purpose. Any reliance placed on such information is therefore strictly at your own risk. ABB reserves the right to discontinue any product or service at any time.

© Copyright 2024 ABB. All rights reserved.

1VAP420001-TG Rev Q October 2024