PR 400-2

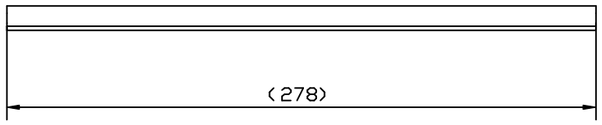

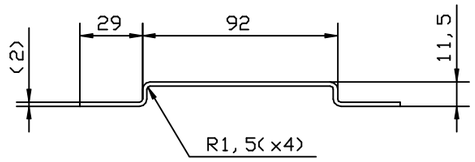

Utbredd

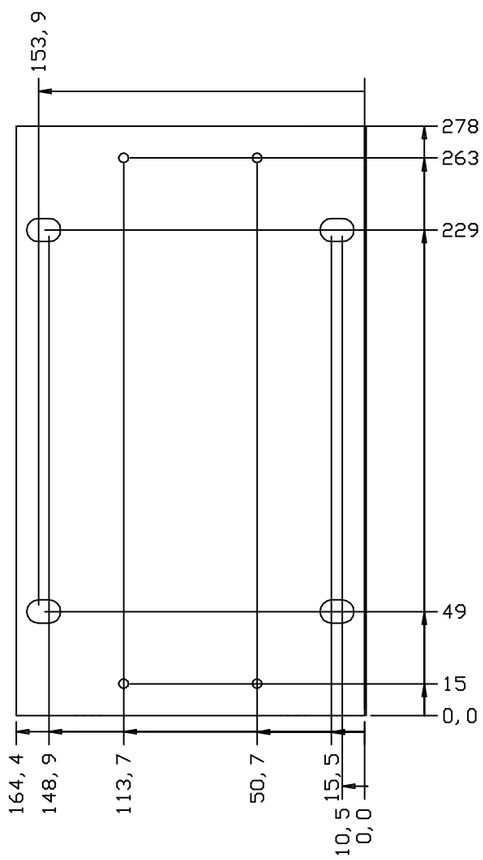

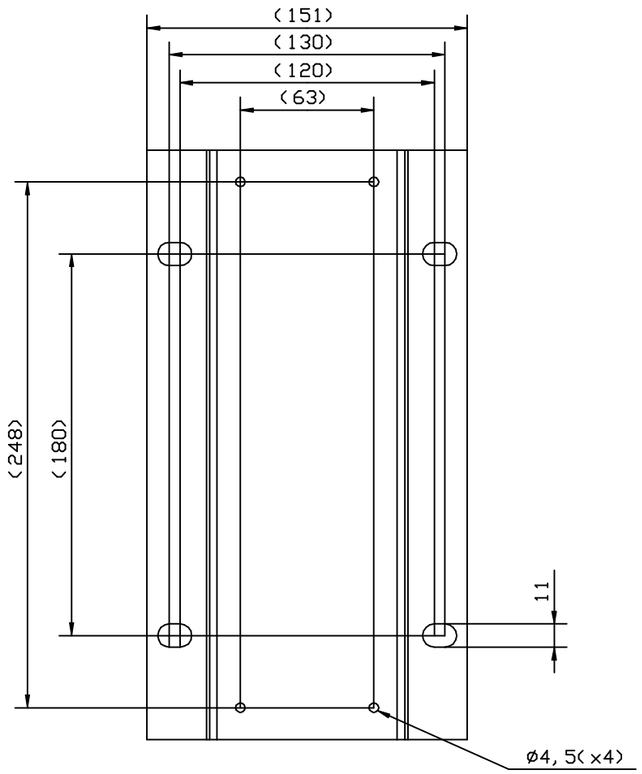

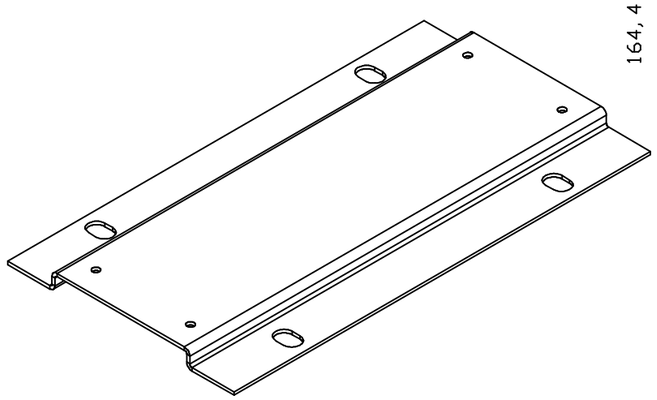

Inside bending radius 1,5
Invändig bockningsradie 1,5

General tolerances ISO 2768-m
Generella toleranser ISO 2768-m

278x164,4

Quantity	Item No.	Article No.	Material, type, etc	Dimensions	Name of item	Note
		1SFB 8-844	2 1151-90	T=2;	Sheet of steel Plåt av stål	

Prepared M Ytterberg	Responsible department SECRL/UK	Title Adapter OKYM315-AF400,460	
Approved K Herold 001018	Take over department	Adapterplåt	Lang. 82
Revision	Scale 1:2	Document No. 2161 566-19 ISSUED	Cont. -
	ABB Control		Sheet 1

Rev ind	Revision	Appd	Year	Week

We reserve all rights in this document and in the information contained therein. Reproduction, use or disclosure to third parties without express authority is strictly forbidden. © ABB Control