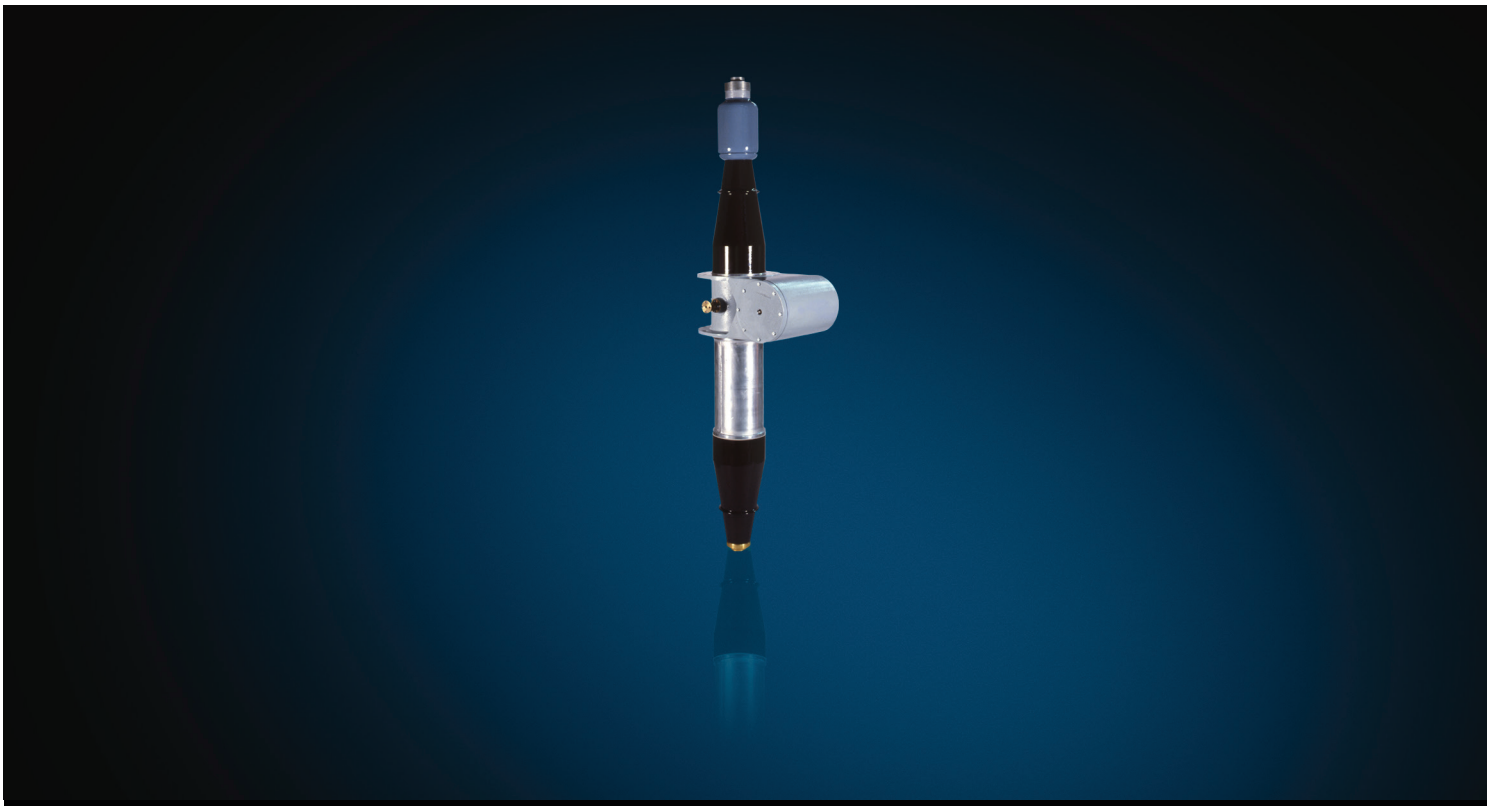

2750 515-116 en, Rev. 4

Transformer bushings, type GOEK
Installation and maintenance guide

Power and productivity
for a better world™

Original instruction

Safety information

Keep this instruction available to those responsible for the installation, maintenance, and operation of the bushing.

The installation, operation, and maintenance of a bushing present numerous potential unsafe conditions, including, but not limited to, the following:

- High pressures
- Lethal voltages
- Moving machinery
- Heavy components
- Slip, stumble or fall

Specialized procedures and instructions are required and must be adhered to when working on such apparatus. Failure to follow the instructions could result in severe personal injury, death, and/or product or property damage.

Additionally, all applicable safety procedures such as regional or local safety rules and regulations, safe working practices, and good judgment must be used by the personnel when installing, operating, maintaining and/or disposing such equipment.

Safety, as defined in this instruction, involves two conditions:

1. Personal injury or death.
2. Product or property damage (includes damage to the bushing or other property, and reduced bushing life).

Safety notations are intended to alert personnel of possible personal injury, death or property damage. They have been inserted in the instructional text prior to the step in which the condition is cited.

The following warnings and notes are used in the manual:

WARNING

WARNING indicates an imminently hazardous situation, which if not avoided, will result in death or serious injury. This signal word is to be limited to the most extreme situations.

WARNING also indicates a potentially hazardous situation which, if not avoided, could result in death or serious injury.

CAUTION

CAUTION indicates a potentially hazardous situation,which if not avoided, may result in minor or moderate injury. It may also be used to alert of unsafe practices.

CAUTION may also indicate property-damage-only hazards.

INFO provides additional information to assist in carrying out the work described and to provide trouble-free operation.

Content

1 Description

1.1 Design

The design and dimensions of bushings type GOEK are given in the Technical Guide, 1ZSE 2750-106. The design principle is also shown in Fig. 1.

Bushings type GOEK are equipped with a test tap according to Fig. 2. The test tap can be used for checking of the bushing insulation by capacitance and dissipation factor measurements. The test tap is earthed via the test tap cover. For continuous measuring, the test tap can be furnished with a terminal box according to Fig. 3.

1. SF_6 side terminal
2. Flexible connection
3. Top housing
4. Porcelain insulator
5. Pre-stressed tubes
6. Expansion tank with rubber bellows
7. Valve for connection to pressure sensor (BSP ½“)
8. Mounting flange
9. Extension for current transformers
10. Condenser core
11. Transformer oil
12. Bottom end nut
13. Bottom contact

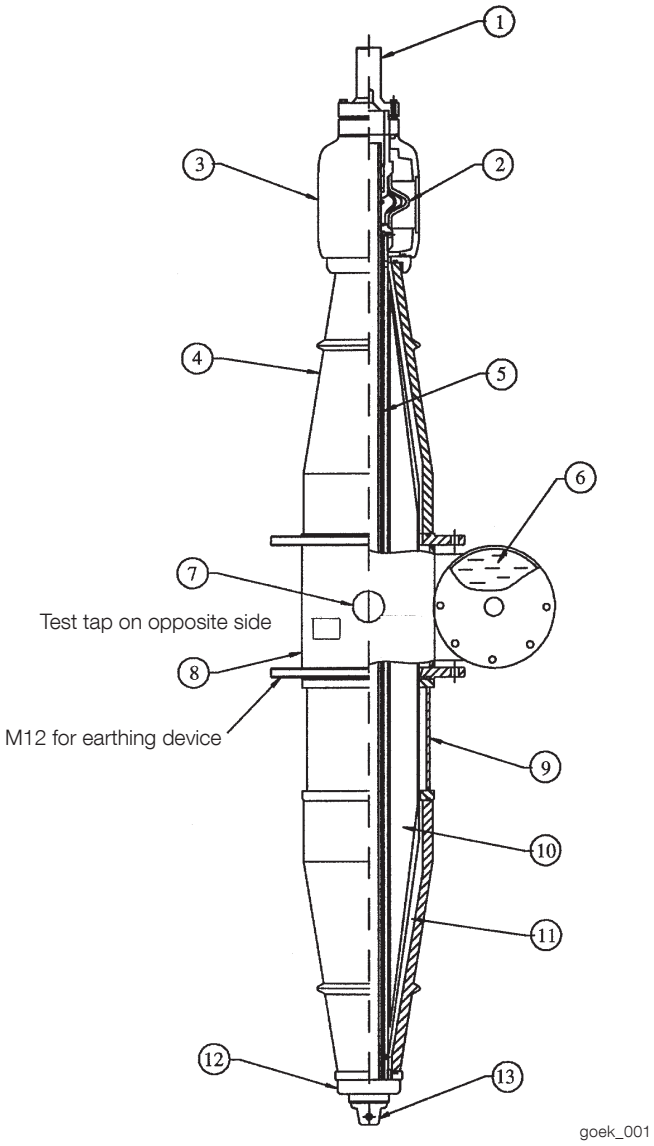

Fig. 1. Design principle.

1. Cover, 2749 515-2
2. Cylindrical head screw, 2121 2459-220
3. Earthing spring, 9580 148-1
4. Gasket (O-ring), 64.5 x 3
6. Bushing, 2769 522-N
7. Press screw, 2129 713-3
8. Disc spring, 2195 703-1
9. Gasket (O-ring), 24.2 x 3
10. Cable
11. Stud, 2769 517-6
12. Sealing washer, 4.5 x 7
13. Stud, 2769 517-7

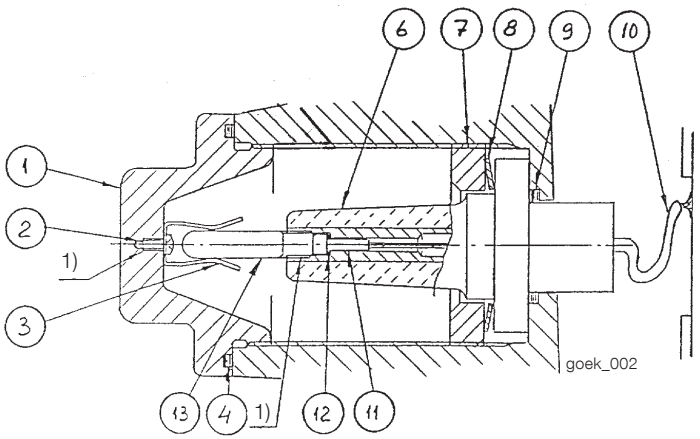

1) Locking liquid 1269 0014-407 (Loctite 601)

Fig. 2. Test tap, 2769 522-T, and test tap cover, 2769 522-M.

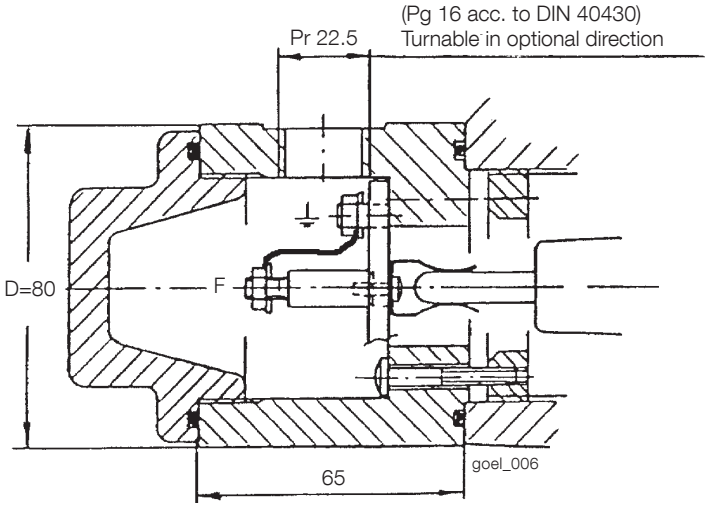

Fig. 3. Terminal box for permanent connection to measuring circuits, 2769 522-C.

The terminal box shall be equipped with a suitable over-voltage protection in order to prevent damages during service. The cable gland shall be oriented downwards in order to prevent water from penetrating the equipment.

1.2 Operating conditions

The table below show the standard technical specifications for the GOEK Oil - SF_6 bushings. For conditions exceeding the below values, please contact ABB.

General specifications

Application:	Transformers
Classification:	Oil impregnated paper, capacitance graded, completely immersed bushing
Ambient temperature:	+40 to -40 °C, minimum value as per temperature class 2 of IEC 60137
Altitude of site:	< 1 000 m
Type of immersion medium:	Transformer oil. Maximum daily mean oil temperature 90 °C. Maximum temporary oil temperature 115 °C
Max. pressure of medium:	100 kPa overpressure
Oil level below bushing flange:	Maximum 30 mm
Markings:	Conforming to IEC/ IEEE

1.3 Mechanical loading

The bushings are designed for the following cantilever loads applied to the midpoint of the SF_6 side terminal, perpendicularly to the bushing axis.

Table 1. Mechanical loading

Bushing	Type test load 1 minute (N)	Max. service load (N) at mounting angle	
		0-30 °	30-90 °
All types	5000	2500	1500

The GOEK bushing can withstand 20 kN continuously in axial direction. The maximum torque on the outer terminal stud is 250 Nm.

The following max. loads are allowed for the mounting flange on the SF_6 side:

Table 2. Mechanical loading.

Bushing	Bending (kNm)	Axial load (kN)
GOEK 1050	5	20
GOEK 1425	5	20
GOEK 1675	10	40

1.4 Spare parts

In case of major damage to the bushing we recommend that it is sent back to ABB for possible repair and re-testing. Certain parts (Figs. 1 and 2), which may be damaged or lost during transport or installation, can be ordered from ABB.

1.5 Pressure monitoring

The oil pressure in bushings type GOEK can be monitored by a pressure monitoring equipment according to product information 5693 827-6.

1.6 Testing

During testing of the transformer, a bushing type GOEK 1050 can be replaced by a bushing type GOE 900-650; a bushing type GOEK 1425 can be replaced by a bushing type GOE 1300-1150; and a bushing type GOEK 1675 can be replaced by a bushing type GOE 1675-1175.

2 Installation

2.1 Tools

- Soft slings
- Lifting gear, 9760 667-A, see Fig. 4
- Shackles, for hole Ø 20 mm and Ø 24 mm, for connection of soft slings to the bushing flange
- Tackle for mounting of the bushing at a certain angle
- Torque wrench key for hexagon head screws, head width 16 mm (M10) and 13 mm (M8)
- Soft bedding

2.2 Consumables

- Water free vaseline, Mobilgrease 28 or other lubricant not harmful to the transformer oil, to lubricate screws that come into contact with the transformer oil.
- Mobilgrease 28 or other suitable grease to lubricate and protect the earthing screw and the outer terminal o-ring gasket.
- Molykote 1000 or other suitable compound to lubricate the screws making the contact and sealing at the outer terminal.

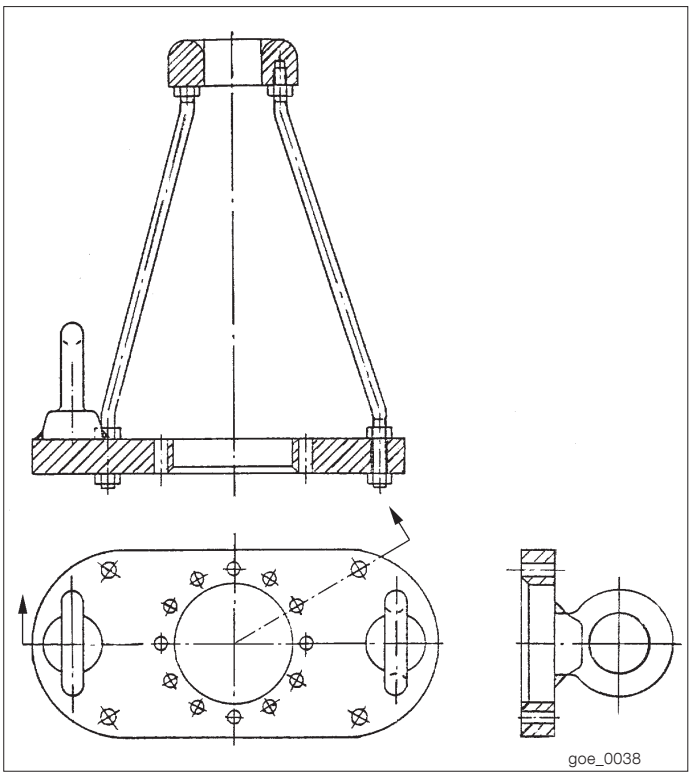

Fig. 4. Liftig gear, 9760 667-A. Mass: 14 kg (steel).

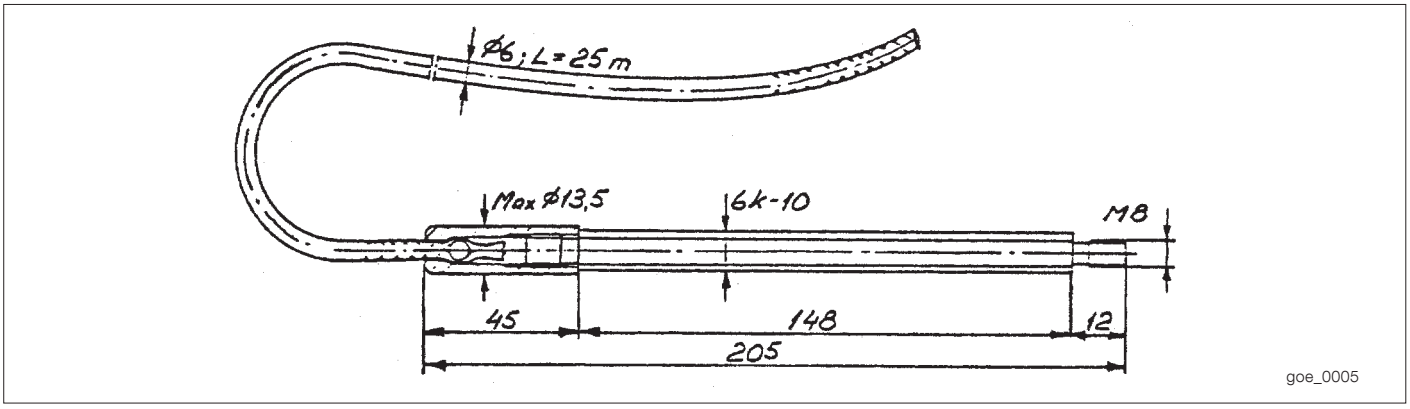

Fig. 5. Flexible pull-through cord, 9760 669-A.

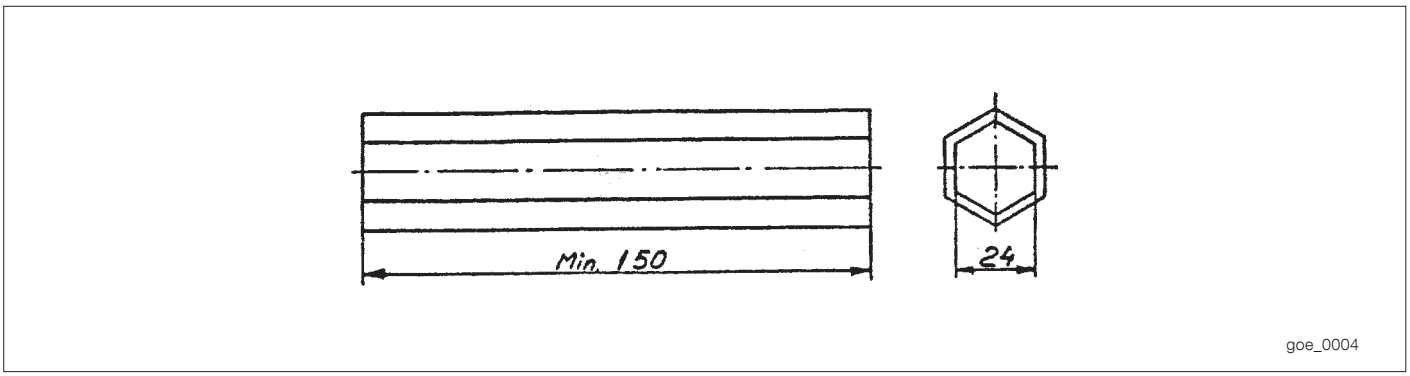

Fig. 6. Box spanner, 9760 669-B.

2.3 Transport and handling

The bushing may be transported and stored horizontally or vertically.

Keep the bushings dry and clean and protected against mechanical damage.

Keep the bushings protected from penetrating water when stored outdoors. This means that the case must not be stored in areas where it can be foreseen that the ground will be wet and muddy during heavy rains. Shelter the case from rain and snow with a tarpaulin or roofing.

Carefully inspect the bushing on receiving with regard to shipping damage. Please note that the bushing has been routine tested in oil and some oil may be left.

The bushings are normally delivered from ABB in boxes with the bushing supported by cellular plastic blocks and fibre boards. The boxes are marked with “Top End”.

2.4 Lifting from the box

CAUTION

For lifting the bushing from the box, apply two clean lifting slings as shown in the figure below. Support the bushing at the same points as in the box if placed on the ground or block it under the mounting flange.

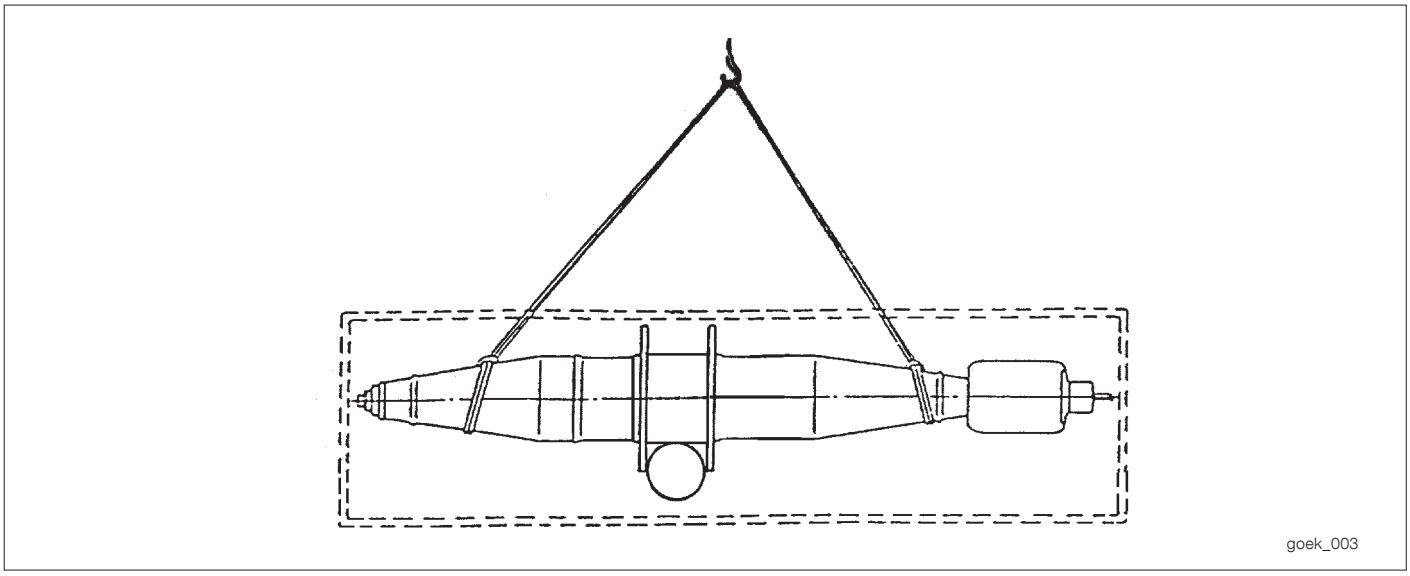

Fig. 7. Lifting from the box.

2.5 Mounting

CAUTION

Lift the bushings with the aid of a lifting tool, see section 2.1 Tools. Lift the bushing to vertical position and to an angle according to the figures below. Use a soft bedding under the bottom end of the bushing, e.g. a rubber mat.

The mass of the bushing is stated on the marking plate. Carefully clean and inspect the oil end of the bushing and the inside of the centre hole before mounting on the transformer.

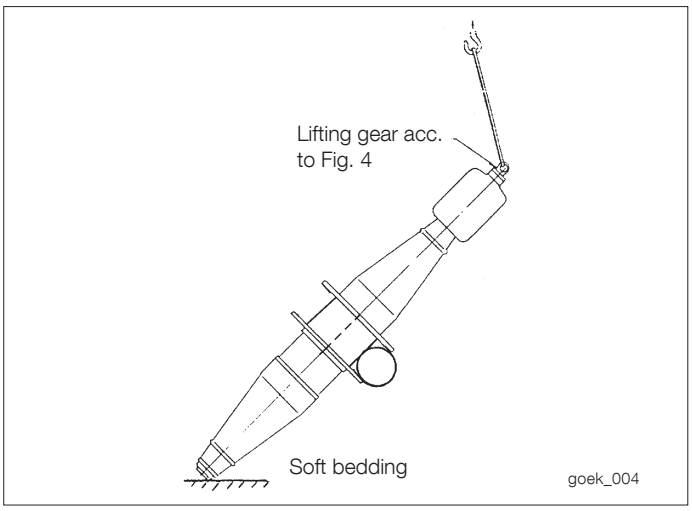

Fig. 8. Raising of bushing using lifting gear.

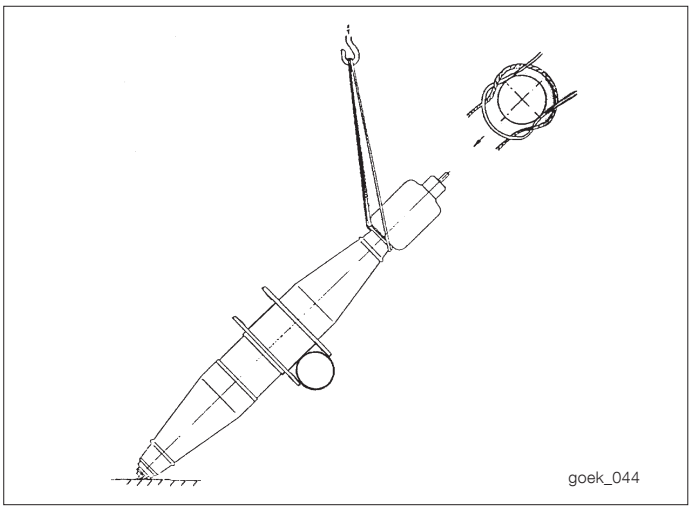

Fig. 9. Raising of bushing using lifting sling only.

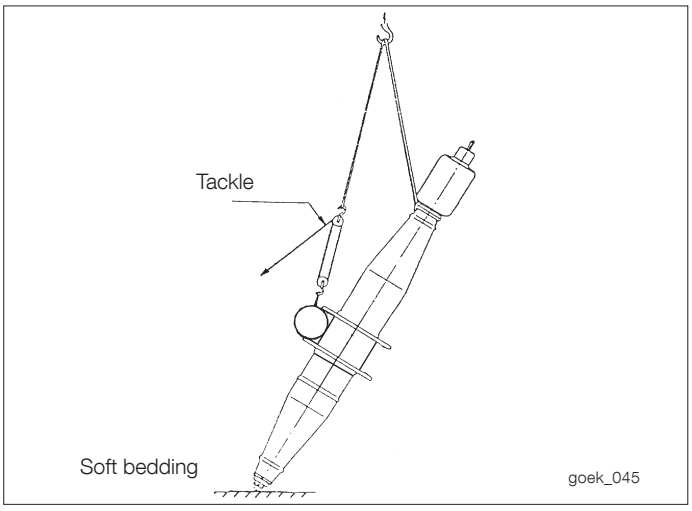

Fig. 10. Raising of bushing to a certain angle.

2.6 Draw rod

Mounting of the draw rod must be performed according to the procedure below. The contact surfaces must be clean.

Observe that the shield, if mounted on the bottom contact, shall be mounted according to Fig. 11 or 19. Mounting on the opposite side will result in high field stresses and risk of major failure.

The parts below the transformer cover are usually supported in the transport cover as shown in Fig. 11. At erection the smaller cover shall be opened first and the support for the connection parts loosened. The bigger transport cover is then removed.

1. If the draw rod is supplied with an additional joint e.g. to make it possible to remove a bushing turret for transport, the additional jointing sleeve shall be locked with locking fluid (Loctite 242 and activator Loctite T747) at site in order to avoid an unintended loosening of this joint at an eventual dismounting of the draw rod system later on. Fig. 12 shows how the joints are locked by delivery.
2. The cord, pulled through the bushing with the conical spring washers (4), the nut (3), and the box spanner (2) in place, is used for lowering of the upper part of the draw rod to the correct position for jointing with the threaded sleeve to the lower end part.
3. The bushing is then lowered into the transformer with the cord well stretched.

If fixed stud bolts are used for fastening of the bushing flange, it is recommended to apply plastic sleeves on 2 or 3 of the studs in order to guide the flange and prevent cutting of metal chips, which may fall down into the transformer.

4. Fix the bushing to the transformer cover.
5. The conical spring washers and the nut are fastened according to Fig. 14. Note that the conical spring washers shall be placed as shown in the figure in order to function correctly.
   The threads and the nut are treated with lubricant at the ABB factory. If the nut can not be screwed on the bolt smoothly, carefully apply Molykote 1000 on the bolt. Remove excess with a rag.

1. Smaller cover
2. Transport cover
3. Transformer cover
4. Draw rod
5. Spacer tube
6. Shield
7. Bottom contact
8. Connection to the winding

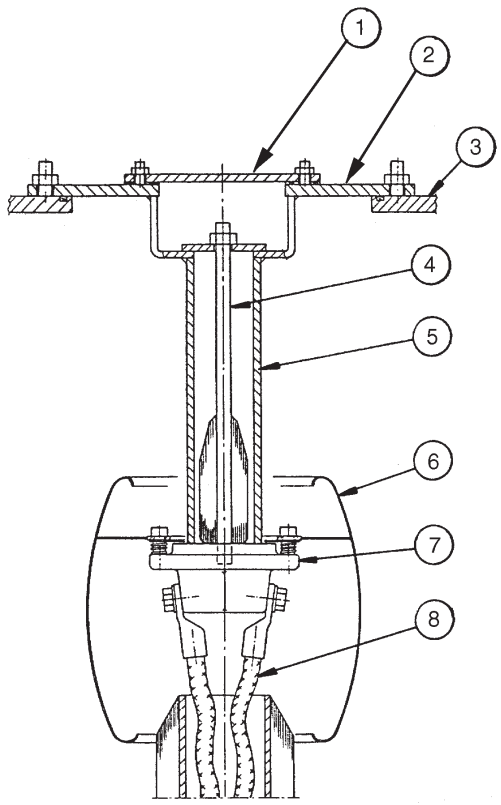

Fig. 11. Example of suspension for inner terminals for draw rod during transport.

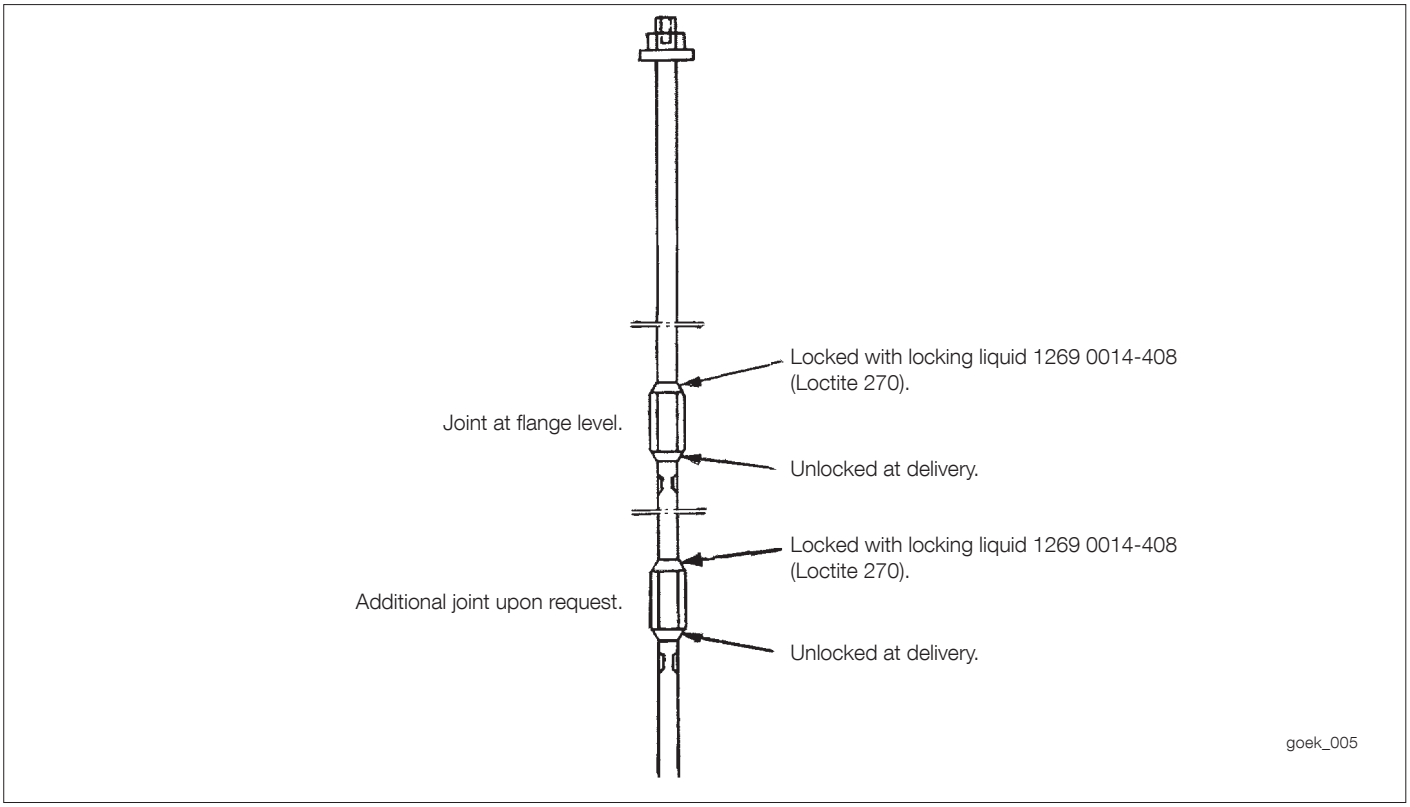

Fig. 12. Locking of draw rod.

1. Flexible pull-through cord acc. to Fig. 5
2. Box spanner acc. to Fig. 6
3. Hexagon nut M16
4. Conical spring washer 17 x 39 x 4 (Belleville spring)
5. Extension acc. to Fig. 5
6. Draw rod
7. Lifting gear acc. to Fig. 4
8. Hexagon head screw, M10 x 50
9. Jointing sleeve, 2126 739-3
10. Washer, 2151 811-14

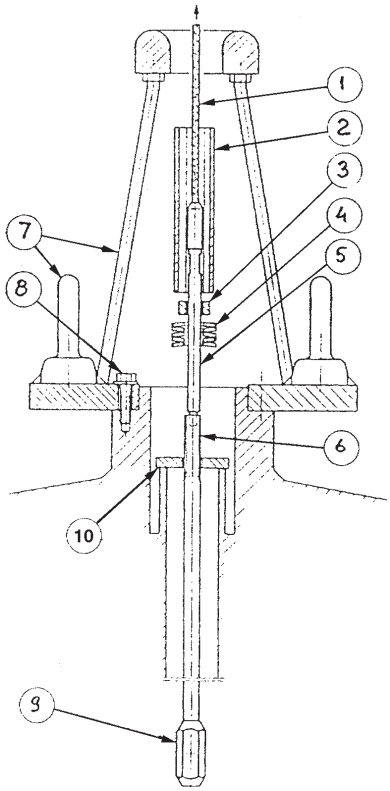

Fig. 13. Assembly of draw rod system.

To make sure that the right force is achieved in the draw rod, the tightening of the nut shall be done according to the following procedure:

1. Tighten the nut with a torque of 140 Nm.
2. Slack off the nut to 10 Nm and measure the distance (a) from the top of the nut to the top of the bolt, according to Fig. 14.
3. Tighten the nut and measure the distance (b).
4. Continue to tighten the nut until the difference between the second and the first measurement, (b-a) = the extension, is according to the value given in Table 3. Each turn corresponds to an extension of 2 mm. The tightening torque to reach the requested extension shall be between 70 and 140 Nm.
5. Check with a dynamometric wrench that the nut is tightened with a torque between 70 and 140 Nm.

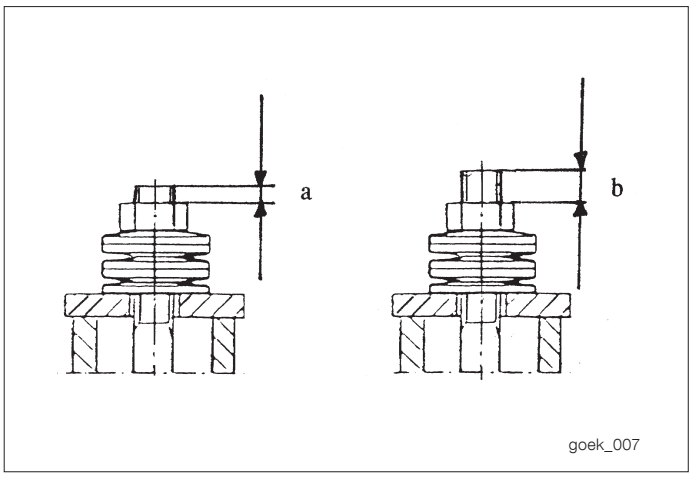

Fig. 14. Tightening of draw rod.

Table 3. Requested extension.

Type GOEK	Extension for current transformers mm	Difference (b - a) mm
1050	300	5.6 ± 1
1050	600	5.9 ± 1
1425	300	6.2 ± 1
1425	600	6.5 ± 1
1675	0	6.5 ± 1
1675	300	6.8 ± 1
1675	600	7.1 ± 1

If it is not possible to achieve a value complying to Table 3 with a tightening torque within 70 - 140 Nm, ABB should be contacted.

CAUTION

This procedure has been introduced to give sufficient contact force between the different parts in the bushing. Neglecting to follow this may lead to failure.

2.7 Mounting of sealing plug (Only for draw rod system)

1. Clean the gasket surfaces carefully.
2. Grease the threads lightly with Mobilgrease 28 or other lubricant not harmfull to the transformer oil.
3. Mount the plug, the gasket (O-ring) (8), the washer (12), the spring washer (11) and the nut.
4. Tighten the nut with a torque of 20 Nm.

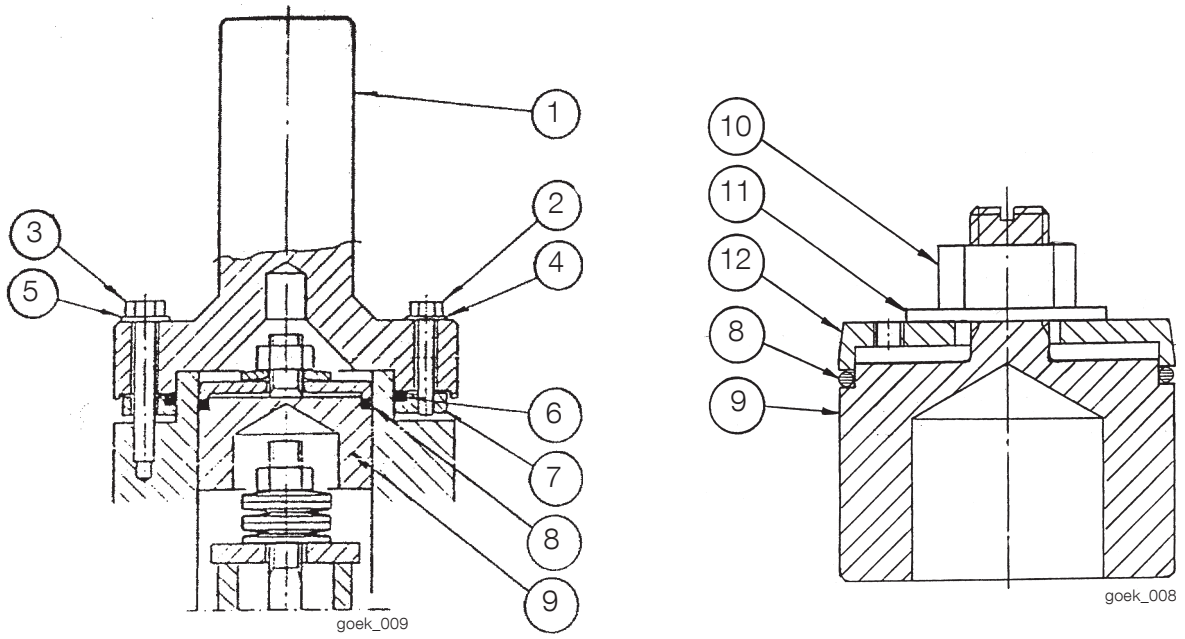

1. Terminal stud
2. Hexagon screw, M8 x 40
3. Hexagon screw, M10 x 60
4. Conical spring washer, 8.4 x 18 x 1 (Belleville)
5. Plane washer, 10.5 x 22 x 2
6. Gasket (O-ring), 99.1 x 5.7
7. Retainer ring for gasket
8. Gasket (O-ring); 64.5 x 3 for 5000 A; 69.5 x 3 for 2500 A
9. Plug
10. Nut
11. Spring washer
12. Washer

Fig. 15. Mounting of sealing plug and SF_6 side terminal.

2.8 Mounting of SF_6 side terminal

The inner contact surfaces of aluminium, both on the bushing tube and on the terminal stud, are tin plated and wire brushing must thus not be carried out.

In order to obtain the correct pressure and a low contact resistance, the following must be carried out:

1. Clean the contact and gasket surfaces carefully.
2. Lubricate the O-ring (6) with Mobilgrease 28.
3. Assemble the retainer ring, the gasket (O-ring) (6), and the terminal stud on the bushing tube.
4. Grease all bolts on thread and underneath the head with Molykote 1000, or other suitable compound.
5. Mount the plane washers and the screws M10, which press the stud against the bushing tube. Tighten the screws by steps crosswise to a final torque of 40 ±4 Nm.

CAUTION

Do not use impact drive or impact wrench.

6. Mount the conical spring washers (4) and the screws M8, which hold the retainer ring. Tighten the screws to press the gasket into place. Tighten by steps crosswise to a final torque of 20 ±2 Nm.

It is extremely important in both cases to tighten evenly. The bolts shall thus be tightened by steps, alternately on both sides.

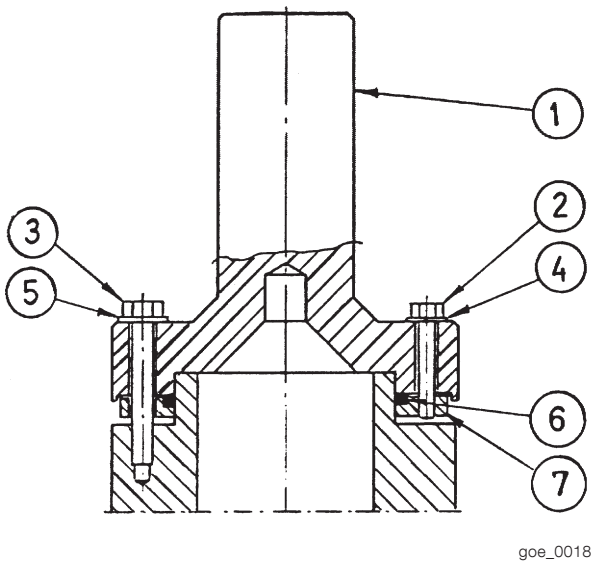

1. Terminal stud
2. Hexagon screw, M8 x 40
3. Hexagon screw, M10 x 60
4. Conical spring washer, 8.4 x 18 x 1 (Belleville)
5. Plane washer, 10.5 x 22 x 2
6. Gasket (O-ring), 99.1 x 5.7
7. Retainer ring for gasket

Fig. 16. Mounting of SF_6 side terminal (without sealing plug).

2.9 Connection to bottom contact and mounting of shield

The shield and the mounting details are packed in a plywood box.

2.9.1 Bottom contact with 4 threaded holes (N1=4) for cable lugs

1. Mount the guiding sleeves, the springs, the pressing rings and the socket screws on the bottom end of the bushing.

CAUTION

Do not use impact drive or impact wrench.

The function of the guiding sleeves is to permit the end shield to be mounted exactly 17 mm from the tapped holes (M10) and to permit the pressing ring and the spring to move along the socket screws.

2. Place the shield temporarily as shown in Fig. 17.
3. Lower the bushing and fasten it to the transformer.
4. Connect the cable lugs to the bottom contact. Tightening torque 68 ± 6 Nm.
5. Push the shield to the bottom end nut of the bushing.
6. Guide the socket screws through the key holes in the shield.
7. Press the springs together.
8. Turn the shield to stop (approx. 20°). Let the springs press the shield down.
9. Try to turn the shield back somewhat to check that the heads of the screws are in the locking position, see Fig. 17.

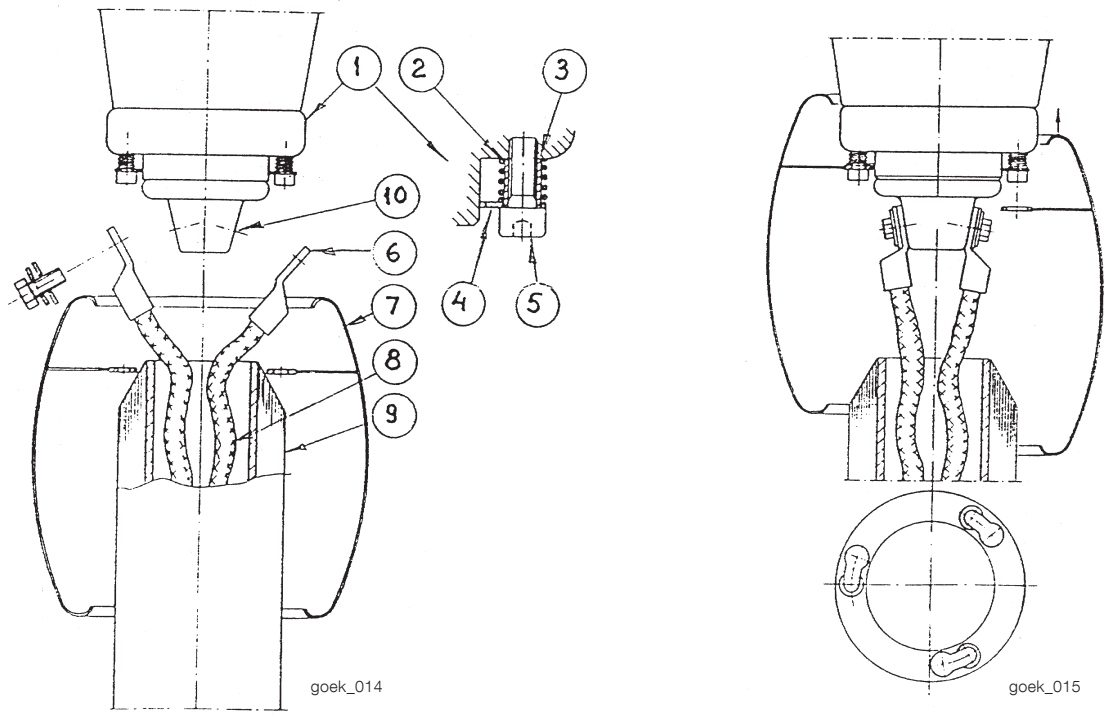

1. Bottom end of bushing
2. Spring, 2192 2011-448
3. Guiding sleeve, 12/10 x 17
4. Pressing ring
5. Socket screw, M10 x 30
6. Cable lugs
7. Shield
8. Connections to the winding
9. Shielding tube
10. Bottom contact with holes M12, thread insert with locking turn

Fig. 17. Connecting to bottom contact and mounting of shield.

2.9.2 Bottom contact with 6 threaded holes (N1=6) for cable lugs

2.9.2.1 Mounting of shield on the bottom end nut of the bushing

1. Connect the cable lugs to the bottom contact. Tightening torque 68 ± 6 Nm.
2. Mount the guiding sleeves, the springs, the pressing rings and the socket screws on the bottom end of the bushing.

CAUTION

Do not use impact drive or impact wrench.

The function of the guiding sleeves is to permit the end shield to be mounted exactly 17 mm from the tapped holes (M10) and to permit the pressing ring and the spring to move along the socket screws.

3. Push the shield to the bottom end nut of the bushing.
4. Guide the socket screws through the key holes in the shield.
5. Press the springs together.
6. Turn the shield to stop (approx. 20°). Let the springs press the shield down.
7. Try to turn the shield back somewhat to check that the heads of the screws are in the locking position, see Fig. 18.
8. Lower the bushing and fasten it to the transformer.

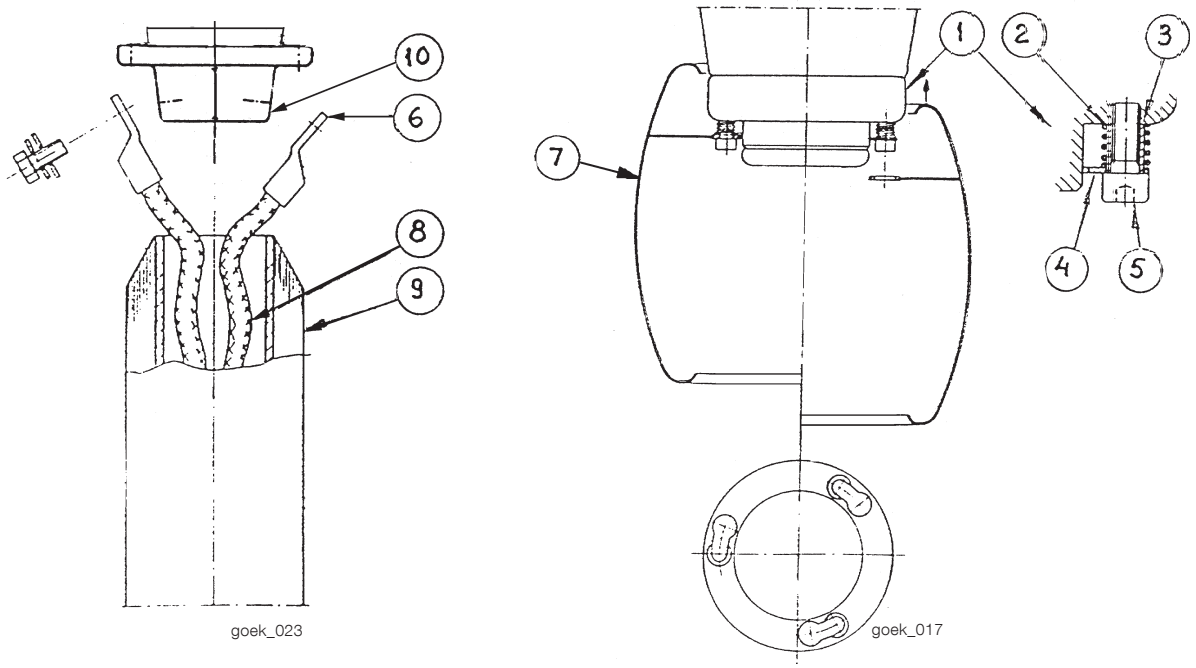

1. Bottom end of bushing
2. Spring, 2192 2011-448
3. Guiding sleeve, 12/10 x 17
4. Pressing ring
5. Socket screw, M10 x 30
6. Cable lugs
7. Shield
8. Connections to the winding
9. Shielding tube
10. Bottom contact with holes M12, thread insert with locking turn

Fig. 18. Connecting to bottom contact and mounting of shield.

2.9.2.2 Mounting of shield on the bottom contact

1. Connect the cable lugs to the bottom contact. Tightening torque 68 ± 6 Nm.
2. Mount the guiding sleeves, the springs, the pressing rings and the socket screws on the bottom contact.

CAUTION

Do not use impact drive or impact wrench.

The function of the guiding sleeves is to permit the shield to be mounted exactly 17 mm from the tapped holes (M10) and to permit the pressing ring and the spring to move along the socket screws.

3. Push the shield on the bottom contact.
4. Guide the socket screws through the key holes in the shield.
5. Press the springs together.
6. Turn the shield to stop (approx. 20°). Let the springs press the shield up.
7. Try to turn the shield back somewhat to check that the heads of the screws are in the locking position, see Fig. 19.
8. Lower the bushing and fasten it to the transformer.

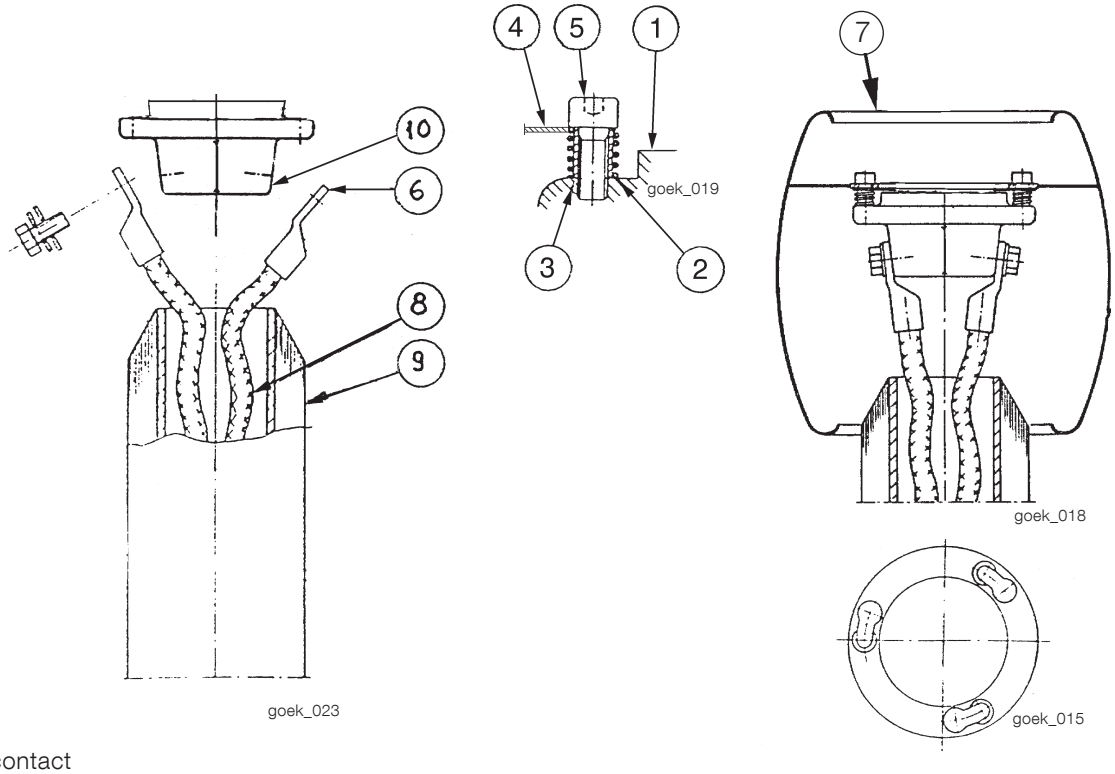

1. Bottom contact
2. Spring, 2192 2011-448
3. Guiding sleeve, 12/10 x 17
4. Pressing ring
5. Socket screw, M10 x 30
6. Cable lugs
7. Shield
8. Connections to the winding
9. Shielding tube
10. Bottom contact with holes M12, thread insert with locking turn

Fig. 19. Connecting to bottom contact and mounting of shield.

2.10 Connection to SF_6 side terminal

Cleaning of the gas side of the bushing and connection to the outer terminal are made according to instructions given by the manufacturer of the switchgear. See also section 1.3 Mechanical loading.

2.11 Mounting of pressure monitoring equipment

If a pressure monitoring equipment is included, it shall be connected to the bushing flange e.g. according to Fig. 20.

> It is important, that the cable entry of the pressure sensor is directed downwards, when the bushing is mounted on the transformer. For further details, see product information 5693 827E-6.

If no pressure monitoring equipment is ordered, the connection flange is covered by a sealing flange.

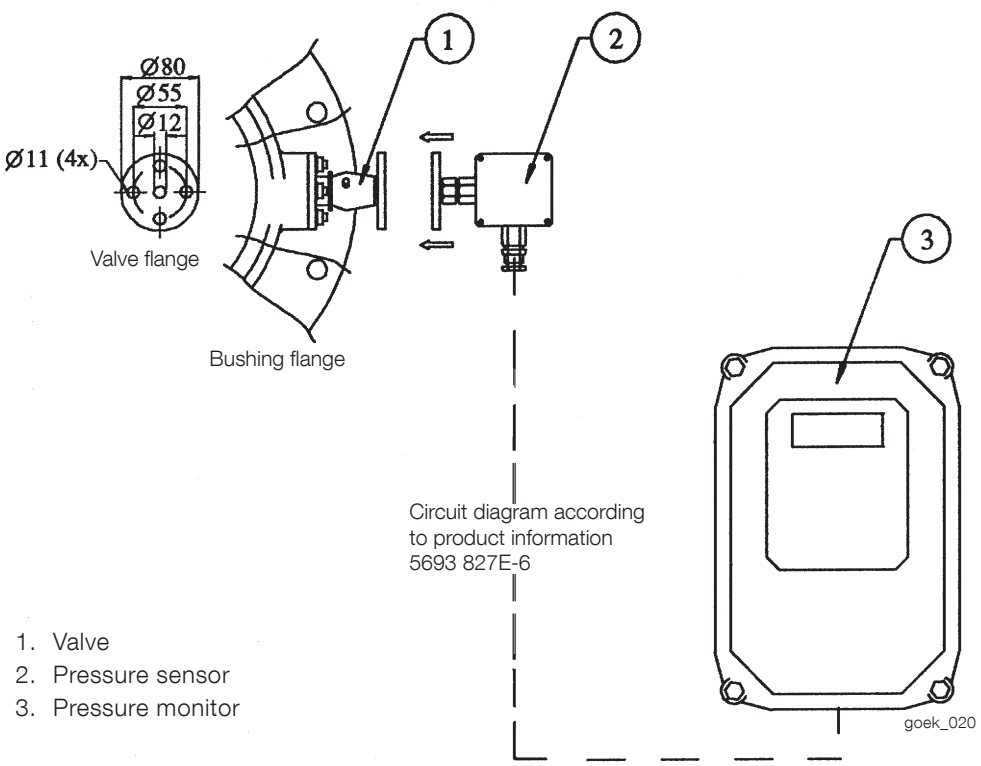

Fig. 20. Connection of pressure monitoring equipment.

2.12 Flange earthing

The bushing flange is provided with a tapped hole M12. After tightening the bolts fixing the bushing to the transformer tank, the flange should be earthed. This prevents electrical discharges between bushing flange and transformer tank under normal service conditions.

Alternative 1

Insert a heavily greased (Mobilgrease 28 recommended) pointed set screw M12 (stainless steel A4-80 preferrably). Tighten to 40 Nm, penetrating the paint of the transformer tank down to the metal underneath. This makes an electrical connection between the bushing and the transformer tank, keeping them at the same voltage.

Alternative 2

Apply a flexible cable between the M12 earthing hole in the bushing flange and a corresponding connection point in the transformer. Grease the screw (Mobilgrease 28 recommended) and tighten the M12 in the bushing to 40 Nm. Connect the other end of the cable to the transformer.

2.13 Recommended tests before energizing

The following tests may be performed to check the insulation, sealing and current path of the bushing. The tests should be made after mounting, but before connecting the SF6 side terminal of the bushing to the rest of the gas-insulated substation power circuit.

2.13.1 Tightness test between transformer and bushing flange

Several different methods may be used and we thus refer to instructions given by the company responsible for the field erection. As a simple example, the tightness of the seal between transformer and bushing flange may be checked when the transformer is oil-filled by using chalk or, perhaps easier, with paper strips.

2.13.2 Measurement of capacitance and tan δ

CAUTION

Since C2 usually is relatively small, the test tap must never be open-circuited when applying a voltage to the bushing. It must always be earthed or connected to an external impedance.

After testing, check that the test tap cover is mounted correctly on the bushing.

After mounting, a capacitance measurement is recommended. A measuring bridge is connected between the outer terminal and the test tap. This is possible without removing the bushing from the transformer as the bushing has an insulated test tap, see Fig. 2.

More details can be found in product information 2750 515-142, "Bushing diagnostics and conditioning".

With the transformer de-energized and the bushing outer terminal disconnected, the test tap cover is removed. The measuring equipment is connected to the test tap and the measuring voltage source is connected to the bushing terminal.

The capacitances C_1 between the centre tube and the test tap, and the capacitance C_2, between the test tap and earth are marked on the name plate. The nominal capacitances C_1 of the different bushing types are listed in Table 4. C_2 is highly dependent on the surrounding parts inside the transformer and it is not possible to give a nominal value valid for all service conditions.

Table 4. Nominal capacitances in pF (Manufacturing tolerances for C_1 ± 10%).

Type GOEK	Extension 0 mm		Extension 300 mm		Extension 600 mm	
	C_1	C_2	C_1	C_2	C_1	C_2
1050	-	-	269	690	350	1000
1425	-	-	245	750	310	1000
1675	231	400	240	840	308	765

Extension means extension for current transformers.

The dissipation factor varies with the temperature of the bushing core, and the measured value should thus be multiplied with the correction factor (multiplier) given below.

Table 5. Dissipation factor variations as a function of temperature.

Bushing core temperature °C	Multiplier to 20 °C (IEC)	Multiplier to 25 °C (USA and Canada)
3-7	0.85	0.80
8-12	0.90	0.85
13-17	0.95	0.90
18-22	1.00	0.95
23-27	1.05	1.00
28-32	1.10	1.05
33-37	1.15	1.10
38-42	1.20	1.15
43-47	1.25	1.20
48-52	1.30	1.25

2.13.3 Check of through resistance

The through-resistance measurement method depends on the design of the transformer. Generally, a current is applied from bushing to bushing. The voltage drop from outer terminal to outer terminal is measured. The resistance is calculated with Ohm's law, U = R·I. (U: Measured voltage drop. I: Through current. R: Total circuit resistance.)

The total through resistance is the sum of the transformer winding and lead resistance and the bushing conductor and contact resistance. The additional resistance from he bushing conductor should not be more than 10 ... 100 μΩ. Since the through resistance of the HV winding of a typical power transformer is in the order of 0.1 ..1 Ω, this is a very rough method that can only be used to detect very large faults in the current path, such as disruptions.

Less-than-perfect contacts can only be detected by making a sensitive measurement across each connection point, or by measuring the temperature increase during operation with an infrared sensitive camera (thermovision).

3 Maintenance

The GOEK bushings are maintenance-free.

WARNING

No work at all can be performed on the bushing while it is energized or not earthed.

3.1 Recommended maintenance and supervision

3.1.1 Measurement of capacitance and tan δ

Please refer to Chapter 2 Installation.

3.1.2 Check for leakage

Make a visual inspection for oil leakage during normal station supervision.

3.1.3 Checking of the oil pressure

If the bushing is equipped with pressure monitoring equipment, the pressure should be checked and noted down regularly.

The oil pressure in the bushing is depending on the temperature. At manufacturing of the bushing the pressure is adjusted to 50 kPa overpressure = 150 kPa (absolute pressure) at + 20 °C.

For other bushing temperatures the pressure diagram in Fig. 21 can be used. If a pressure sensor acc. to Fig. 20 is connected to the bushing, the present pressure can be read. The pressure monitor shows overpressure and is delivered with 3 pressure relays. One relay shall give alarm at too low pressure and is preset at -15 kPa negative pressure = 85 kPa (absolute). The second relay is preset at 150 kPa overpressure = 250 kPa (absolute) and shall give alarm at too high pressure. The third relay is preset at 250 kPa overpressure = 350 kPa (absolute) and can be used for tripping the transformer breaker.

Note that if the bushing is mounted vertically, the pressure shown will be the sum of the nominal pressure in the bushing and pressure caused by the oil head. For vertically mounted bushings, the pressure increases with approximately 10 kPa.

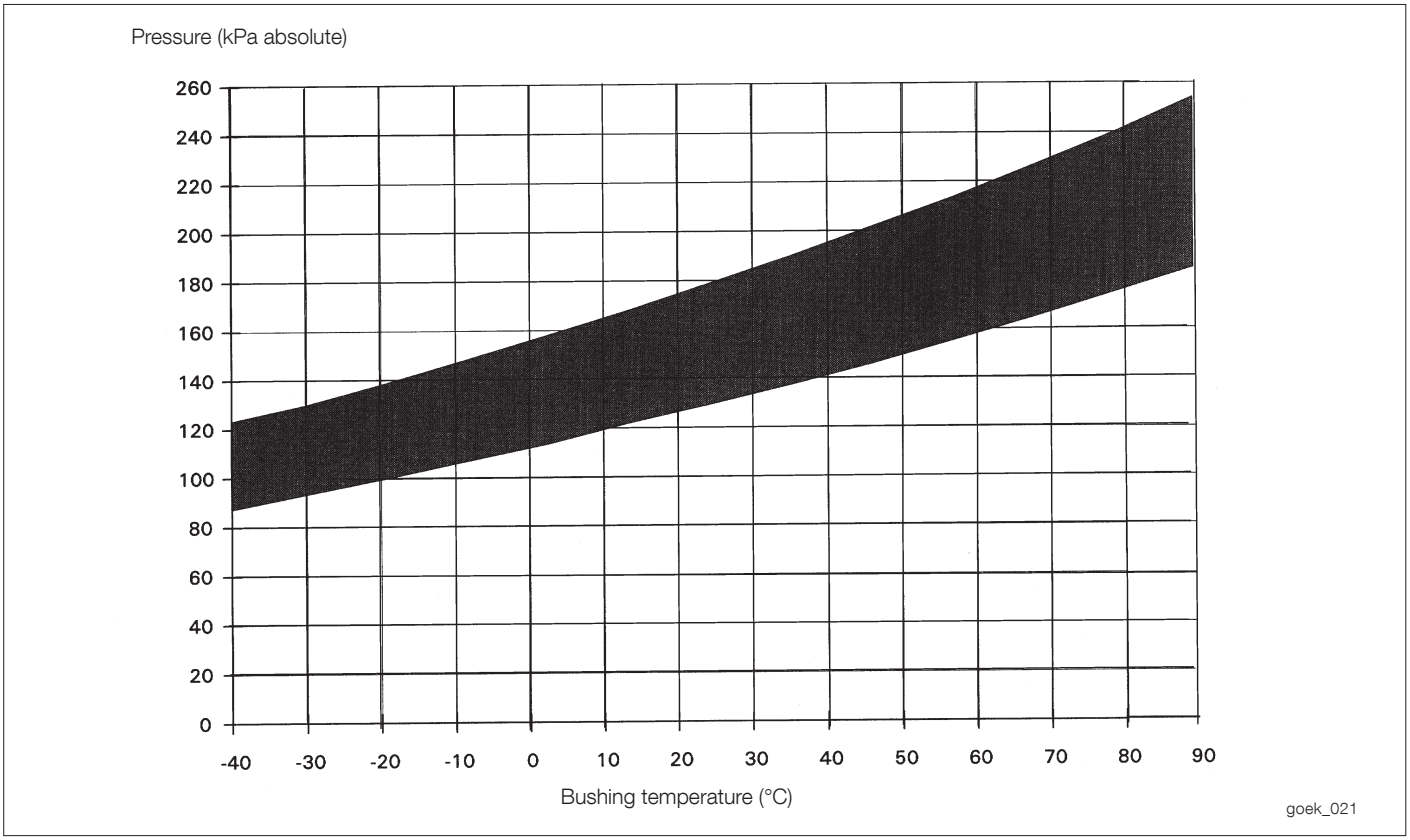

Fig. 21. Pressure - temperature diagram.

It is not recommended to perform oil filling for this type of bushing. If the bushing has a leakage, it should be sent back for repair.

If some oil have been lost during oil sampling for gas analysis, it can be restored by following the instruction below:

3.1.4 Oil filling of bushing

The bushing can be in any position at the oil filling.

The temperature of the oil can be ambient temperature.

3.1.4.1 Material requirements

- New, clean and dry transformer oil with a pressure of 50 kPa (150kPa abs)
- A pressure gauge with reading 0-200 kPa (0-300kPa abs)
- 2 branch-T connections
- 4 valves (valve 2-5 in Fig. 22)
- A vacuum pump

3.1.4.2 Adjustment of the oil pressure

- Make the connections according to Fig. 22.
- Connect a vacuum pump to valve 3.
- Close all valves.
- Open valve 4 and valve 3 and start the vacuum pump.
- Pump to ≤ 0.07 mbar.
- Close valve 3.
- Open valve 5.
- Open valve 2 and check the pressure of the oil system.
- Open valve 1 and add oil to the bushing.
- Close valve 4, check the pressure in the bushing.
- Compare the pressure to the pressure-temperature diagram Fig 21.
- If the pressure is low, add more oil to the bushing by opening valve 4.
- If the pressure is high, the vacuum pump is de-mounted and valve 3 is opened as drainage.

The quantity of the filling oil is controlled through the bushing inner pressure instead of the oil level.

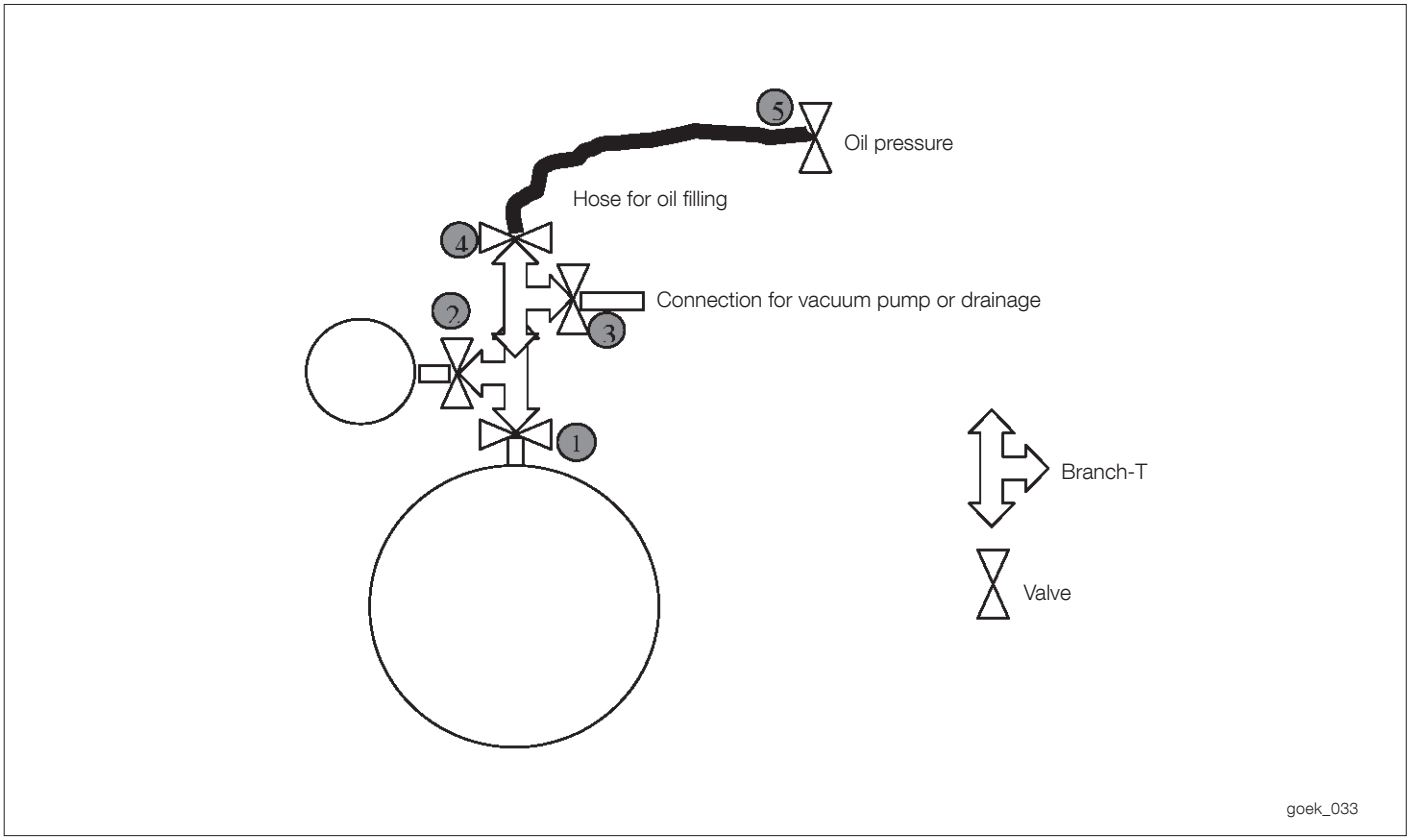

Fig. 22. Oil filling of bushing.

3.2 Disposal after end of service life

The bushing consists of the following material:

- Centre tube of copper or low-alloy aluminium.
- Terminals of copper, brass or low-alloy aluminium may be plated with for instance silver, tin, gold or nickel in layer thickness up to 20 µm.
- Transformer oil as per IEC 60296, class 2.
- Transformer oil impregnated condenser core consists of paper and 1 % Al foils.
- Extension for current transformers, flexible connection, mounting flange, top end nut and top housing consist of Al alloys.
- Insulators consist of quartz or alumina based porcelain.

Contact us

ABB AB
Components
SE-771 80 Ludvika, Sweden
Phone: +46 240 78 20 00
Fax: +46 240 121 57
E-Mail: sales@se.abb.com

www.abb.com/electricalcomponents

Power and productivity
for a better world™