In Work

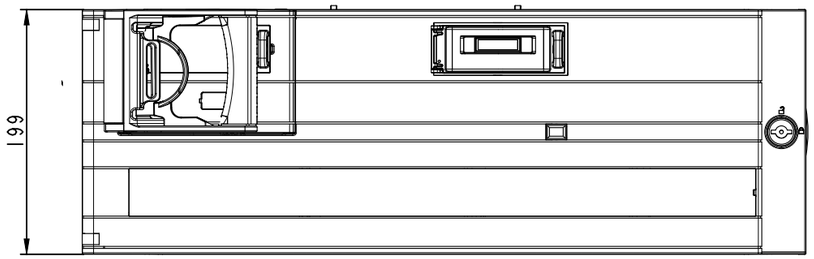

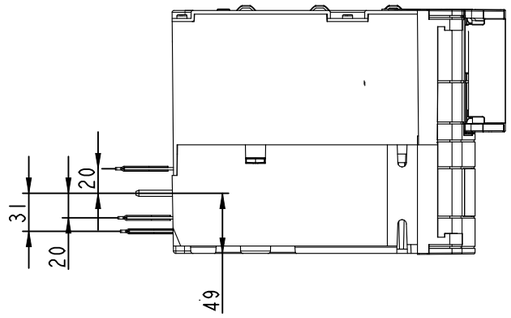

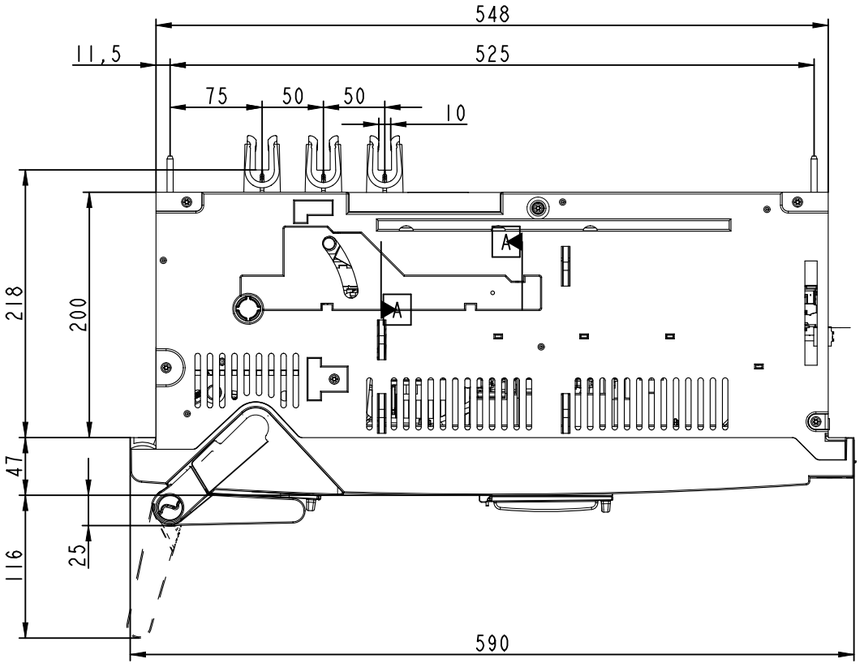

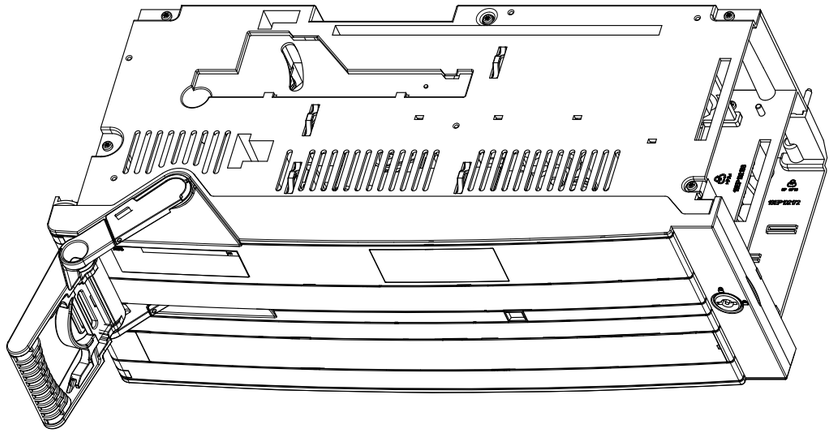

*FUNCTIONAL DIMENSIONS Fo Fi Fc OR ( ); CHANGED DIMENSIONS A

COLOR	SURFACE	TOOL	QPS	FTS	VTP	UNMARKED ROUNDINGS	UNMARKED DRAFTS
			N	N	N		

RAW MATERIAL	MATERIAL NORM	NET WEIGHT	VOLUME	AREA
		46901818,9 g	5035,2 cm^3	[.1] cm^2

CREATED	MODIFIED	APPROVED
2022-08-11 Rocky-QiFeng Zheng	2022-08-11 Rocky-QiFeng Zheng	2022-09-16 Rocky-RuiDong Yi (P-Admin)

ECN NUMBER	ECN DATE	PRODUCT	DRAWING FILE
		Slimline	1SEP204483R7500_2D A.1

ORGANIZATION	DEPARTMENT	TOLERANCES
Electrification-Smart Power Business Line	RD Center CN	

TITLE (ZH)	TYPE	SCALE	FORMAT	LANGUAGE	SHEET
		1:5	A3	EN/ZH	1/1

TITLE (EN)	DOC. NO.	REV.
XRG3-50/10-3P_DIMENSION_2D	1SEP204483R7500_2D	A

Proprietary and Secret Information

We reserve all rights in this document and in the information contained therein. Reproduction, use or disclosure to third parties without express authority is strictly forbidden.
Copyright ©2022 ABB.
保密文件，经手人赋有保密义务；未经授权而披露，权利人享有追偿权利！

Rev	Description
A	
B	
C	