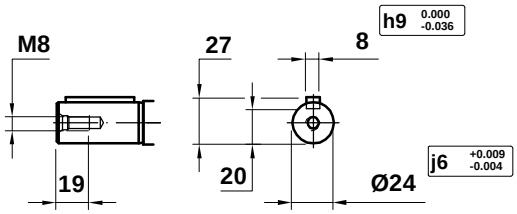

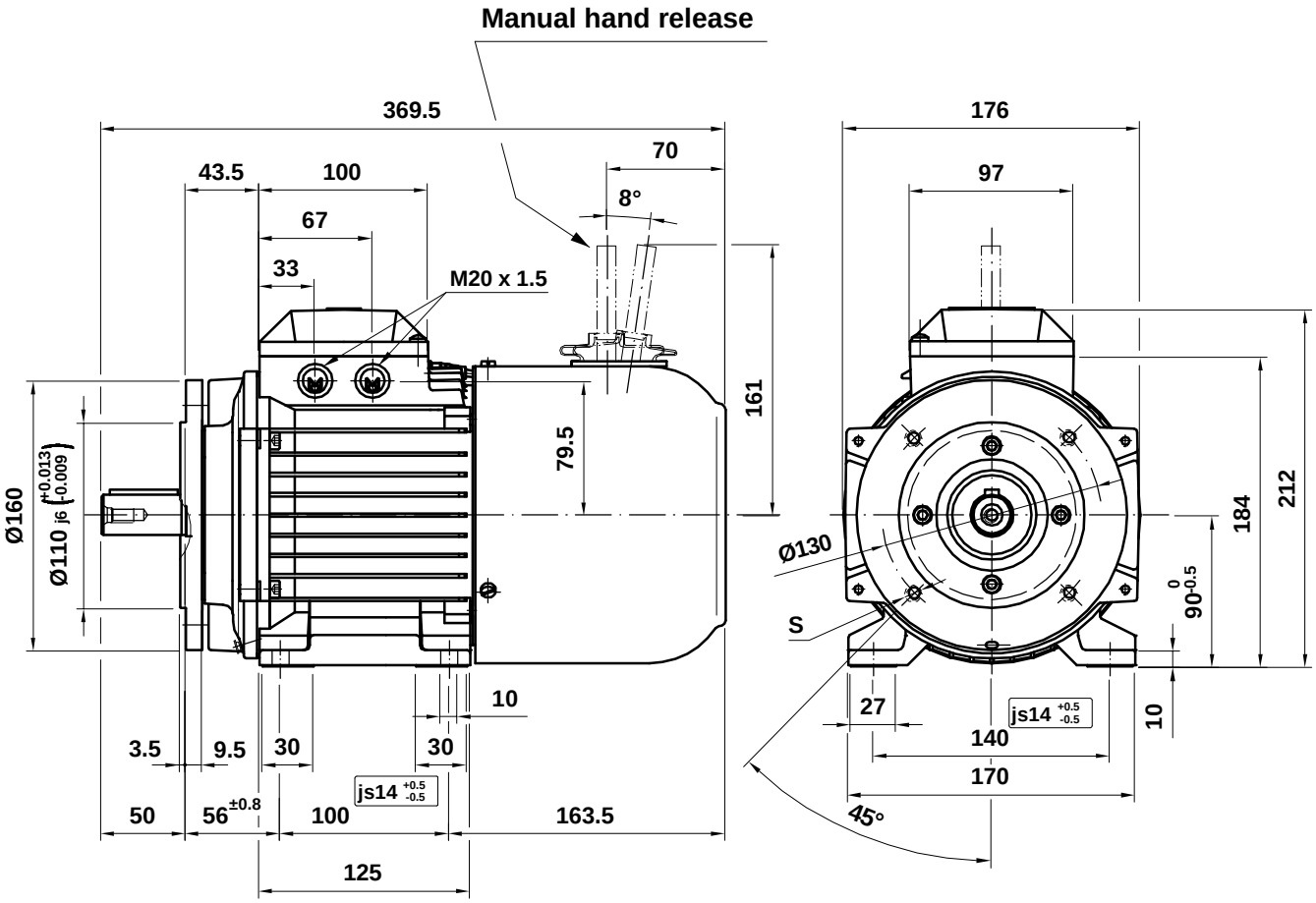

S = { Ø11 – Special IM 2001
M8 – Special IM 2101 }

M3ARF/S 090 S

Motor Dimension Print	Motor Type : M3ARF/S 090 S IMB34 FF(T)-130	Document Nº : A1.3244

Description :
Brake motor foot and flange mounted special (2-pieces) IM2001 or 2101

Unit : División Motores, Spain	Issued by : IKA/G.Blanes	Replaces :	
Date : 2002-01-07	Approved by : IKA/E.Sáenz	Replaced by :	
ABB Automation Products, S.A.	Customer Reference :		ABB