ASEA BROWN BOVERI

ABB Relays

Type RAMDE

Motor protection with RMS-value measurements

B03-4511[E]

January 1987
Data subject to change without notic
• New

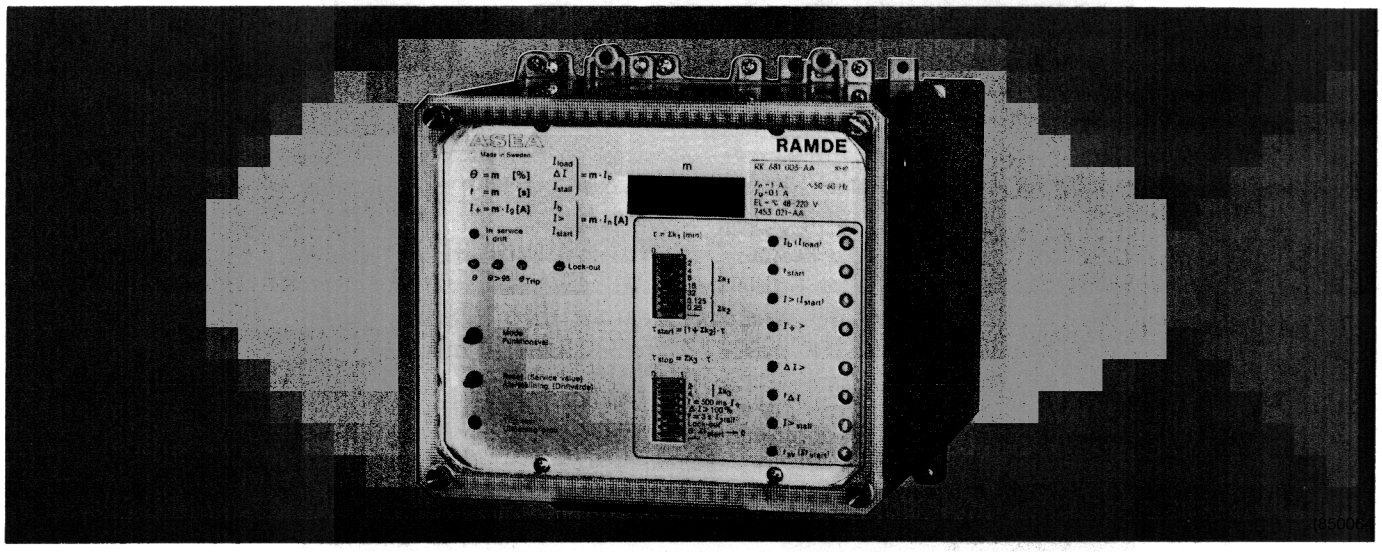

General

- **Overload protection with 2% limiting error in current measurement and with adjustable start and cooling off time**
- **Short circuit protection**
- **Ground-fault protection**
- **Long-starting-time protection**
- **Current-unbalance protection**
- **Phase failure protection**
- **Inter-turn short circuit protection**
- **Stalled rotor protection**
- **Repeated-starts protection**
- **Display showing set values, service values start time and start current, as well as tripping values**
- **Power consumption in ground current circuit < 1 mVA at 3 mA**
- **Auxiliary voltage: 48–220 V±20%, ac or dc**
- **COMBIFLEX plug-in or screw connection**

Application

RAMDE can be used for both synchronous and asynchronous motors. The current measurements are based on RMS-values, therefore taking into consideration the harmonics common in today's industrial environments. The current-unbalance protection is independent of frequency and phase sequence and therefore also works for motors fed via frequency convertors or for reversible motors.

All settings are made on the front of the unit. Set values, service current, thermal content, current-unbalance, start time and start current are shown on the display.

Overload protection (I_b)
The protection, which is a thermal overcurrent relay, protects the motor against overheating. The thermal time constant is determined on the basis of the size and construction of the motor. To be able to use the motor's optimal thermal capacity at start-up, the time constant can be increased. At 95 % thermal content an alarm is triggered which is indicated by a LED and which can be connected to an output relay. The cooling-down constant can be prolonged to suit all types of cooling-down methods if the motor stops.

Restarting of the motor is blocked after trippir until the thermal content has decreased belc 50 %. The relay's thermal content can also b quickly emptied with a switch and the blockir will then be released. The relay can be set wi the "Lock-out" switch so that manual resettir must always be done before restarting.

Short circuit protection (I>)
For direct-on-line-started motors, the relay operate current should be set higher than tl start current. For all motors, the relay should l set higher than the maximum fed short circ current from the motor at external close-up sh circuit.

Ground-fault protection
If several motors are connected to the sar busbar, then every motor should have grour fault protection. The relay can be delayed stop undue tripping when it is being fed fr residual current transformers.

Long-starting-time protection (t_{start})
This protection mainly protects the rotor agair overheating, during start. If the starting time too long, the protection trips the motor break

Application (cont'd)

At normal start and after set starting time also the stalled rotor protection is activated.

Current-unbalance protection
The relay mainly protects the rotor. Unbalance in the line current, single-phase or two-phase faults and phase failure will cause negative-sequence-current.

Since the motor protection measures the difference between the phase currents, this allows for the measurement of small negative-sequence-currents, to detect inter-turn short circuits, two phase short circuits close to the stator's zero point as well as phase failure.

Stalled rotor protection($I >_{stall}$)
A stalling or braking of the rotor during service will be detected when the set starting time has run out. The delay gives selectivity against external faults and heavy varying load. The relay also works as a time delayed back-up short circuit protection when the motor is in service.

Repeated-start protection (t_{sv})
When a motor is started, there is a considerable rise in temperature in the rotor. To avoid overheating and temperature tensions there is a built-in 2 min block that prevents restarting. If, before a restart, the sum of earlier start times Σt_{start} and previous start time t_{start} is greater than the set start time t_{sv}, then the restart will be blocked. If the thermal content in the motor is greater than what is caused from a 80 % relative heat content, then restart will also be blocked.

Design

RAMDE consists primarily of three P.C. boards, a power supply unit, input circuits, processor board, and 3 or 4 input transformers all contained in an aluminium casing. A grounded internal shield system provides effective protection against external interference. The circuits are fed with auxiliary voltage from the power supply unit which galvanically separates internal and external voltage. The unit can be fed with either ac or dc voltage independent of polarity.

RAMDE is available in several versions which differ in the following respects:
– the way they are connected and installed
– with or without ground fault protection
– with or without test switch

The operation for the following is described:
– Setting
– Normal service
– Tripping

Setting
Setting is done by means of switches and potentiometers. Set values are displayed on the digital display by pushing repeatedly on the "Mode" button, and at the same time the LED's to the left of the potentiometers for each protective function will light up with a steady glow.

Normal service
The green LED marked "In Service" is on. If the internal supervision discovers an internal fault or if the supply voltage is interrupted, the LED will go out and an alarm relay will pick up.

If the "Reset" button (Service value) is pushed repeatedly, the following service values will be shown on the display at the same time as the appropriate LED " " lights up;

– the motor's load current as a factor of the motor's rated current "I_{load}"
– thermal content as percent "I_{load}, θ"
– unbalanced current as a factor of the motor's rated current "$\Delta I>$"
– starting time "t_{start}"
– starting current "I_{start}"
– total starting time "Σt_{start}"

If the push sequence is not completed the display and the LED will go out after about 8 minutes.

Tripping
Tripping is indicated by a flashing red LED. A tripping indication which has not been reset will automatically go out when another fault occurs. When tripping is caused by the thermal protection, the unbalance protection, or the stalled rotor protection, the load current or unbalanced current will be shown when resetting is done.

Incorrect setting
If a function is set outside its operating range, a flashing value will be shown on the display. If no thermal time constant is selected or if the overload protection is blocked, the display will show flashing zeros at the same time as the LED I_b flashes.

Blocking
The overload relay is blocked either by a switch or by not choosing a thermal time constant. The relays for Long start time or Stalled rotor are blocked by setting t_{start} on maximum, then the display is showing three nines. The unbalance relay is blocked by setting its potentiometer t_t to maximum, with the display once again showing nines.

Technical data

Common data

Rated current I_n	1 or 5 A
Basic current I_b (I_b prop. to the motor's rated current)	0.5–1.2 times I_n
Rated ground current I_g	3, 10, 100 or 500 mA
Rated frequency	50–60 Hz
Auxiliary voltage	48–220 V ±20% dc or ac 50–60 Hz
Power consumption per phase: voltage circuits (at rated current);	
I_n = 1 A	<50mVA
I_n = 5 A	<250 mVA
I_g = 3 mA and 10 mA	<1 mVA
I_g = 100 mA	<1.5 mVA
I_g = 500 mA	<4 mVA
Auxiliary current circuit (dependent on auxiliary voltage);	
normal service	maximum 9 W
operational	maximum 12 W
Overload capacity: Continuous;	
I_n = 1 A and 5 A	3 times I_n
I_g = 3; 10; 100 mA	20 times I_g
I_g = 500 mA	10 times I_g
For 1 s;	100 times I_n resp I_g (max 350 A for COMBIFLEX)
Permitted service ambient temperature	−5°C to +55°C
Temperature and auxiliary voltage dependency	< 1 % of set value within temperature and auxiliary voltage range
Dielectric test voltage	
current circuits	50 Hz,2.5 kV,1 min
other circuits	50 Hz,2.0 kV,1 min
Impulse voltage test	5 kV, 1,2/50 μs, 0.5J
Power frequency test	50 Hz, 0.5 kV, 2 min
Fast transient test	4–8 kV, 2 min
1 MHz burst test	2.5 kV, 2s
Humidity test	acc. to IEC 68-2-30
Storage temperature	−40°C to +70°C
Weight: without app. bars	3.76 kg
screw terminals	4.6 kg
Dimensions: without test switch	(4S 24C) H=170, W=168, D=252 mm
with test switch	(4S 30C) H=170, W=210, D=252 mm
screw terminals	(4S 24C) H=170, W=168, D=252 mm

Contact data

	Signal	Tripping
System voltage	250 V	250 V
Test voltage over open contact	1 kV	1.5 kV
Current-carrying capacity	5 A	15 A
Making and conducting capacity;		
1 s	10 A	25 A
200 ms	30 A	50 A
Breaking capacity;		
ac P.F. > 0.4, 250 V	8A	12 A
dc L/R < 40 ms 48 V	1 A	0.5 A
dc L/R < 40 ms 110 V	0.4 A	0.25 A
dc L/R < 40 ms 220 V	0.2 A	0.15 A

Overload relay

Current setting I_b	0.5–1.2 times I_n
Limiting error	<2 % of set current
Time constant	2–62 min in steps of 2
Current measuring error	<2 % of I_b
Inverse time measuring error	< 1 % calculated time ±0.5 s
Increase of time constant at start τ_{start}	0, 1.125×τ, 1.25×τ or 1.375×τ
Cooling down time constant τ_{stop}	1, 2, 4 or 6 times τ
Reset after tripping at	θ <50 %

Short circuit relay

Current setting I>	2–10 times I_n
Limiting error	<5 % at set current
Operate time	Typical 55±10 ms at 2 times set current
Reset ratio	>95 %
Reset time	<100 ms
Transient overreach at fully developed dc component and source time constant L/R < 25 ms	<5 %

Ground-fault relay

Current setting I⏚>	1–10 times I_g
Limiting error	<8 % of set current
Operate time:	
Time delay, selectable	Typical 100 ms or 500 ms a I_g=2 times set current
Reset ratio	> 90 %
Transient overreach at fully developed dc component and source time constant L/R < 25 ms	<5 %

Unbalance relay

Current setting ΔI>	0.1–0.5 times I_b
Limiting error	<2 % of I_b
Set delay	1–12 s
Limiting error	< 0.1 s
At phase failure, ΔI> 1.0 times I_b	delay 1 s
Relay does not operate at phase current	< 10 % of I_b
Relay blocked at phase current	> 500 % of I_b

Long-starting-time relay

Set starting time	2–60 s. Time measured fron start current > 6 % to < 112 % of I_b
Limiting error	0.5 s

Stalled rotor relay

Current setting	1–4 times I_b
Limiting error	< 5 % of I_b
Set delay	0.3 or 3 s

Repeated-starts relay

Set Σ starting time t_{sv}	10–120 s
Limiting error	1 s

Connection diagram

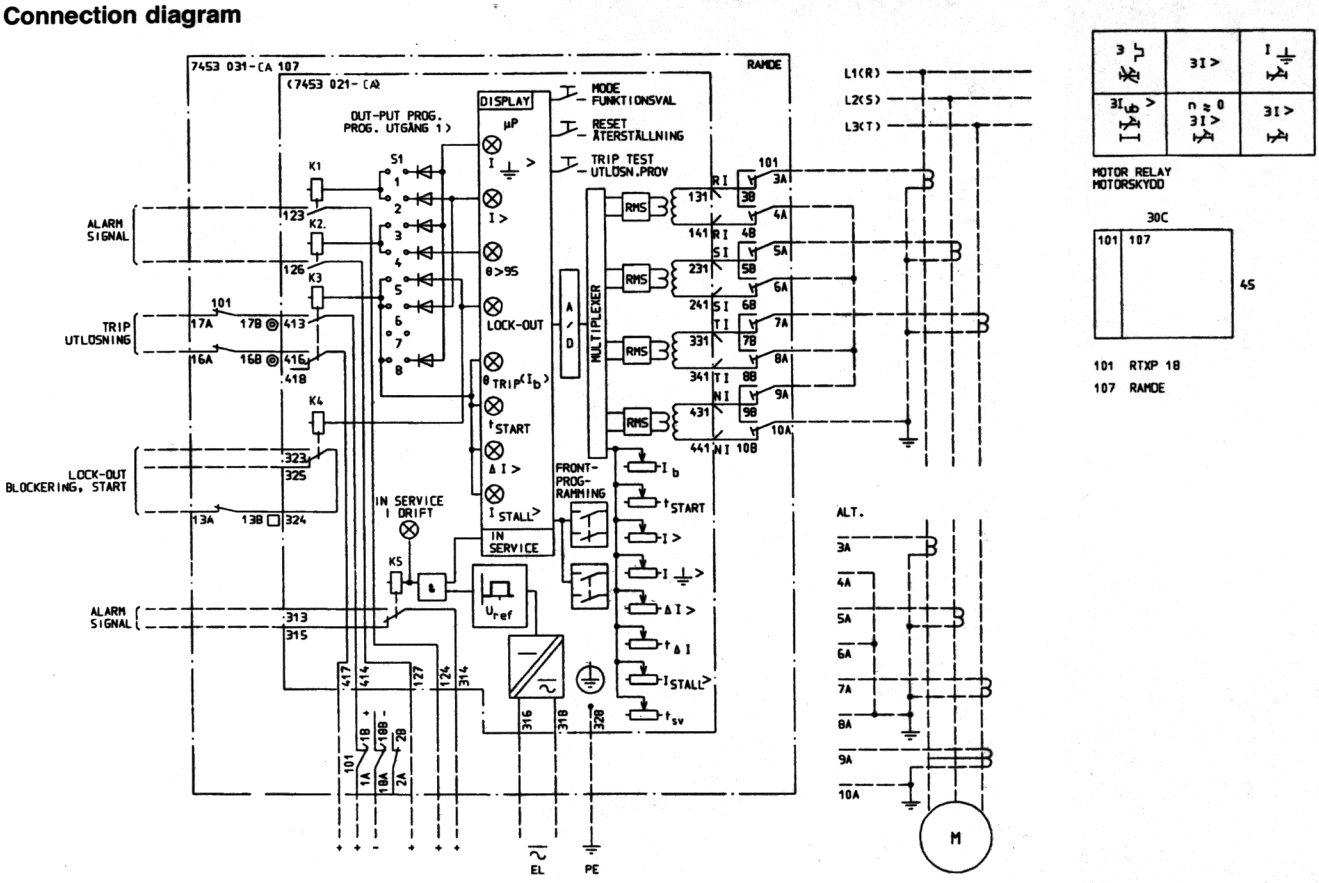

Fig. 1 Terminal and circuit diagram no. 7453 021-AA

To order

Specify:
Type RAMDE
Quantity
Ordering no.
Rated current I_n = 1 or 5 A
Rated current I_g = 3, 10, 100 or 500 mA

Mounting and connection
COMBIFLEX versions of RAMDE can be mounted in an equipment frame, RHGX casing, flush-mounted in a panel or on a panel frame with front connections. Screw terminal version with rear connection, can be flush or semi-flush mounted. For mounting and connection parts, refer to B03-9301 E, UG03-4511 E and MI03-4511 E.

Ordering no. RK 681 ...-.. Version	Without ground fault relay	With ground fault relay
without app. bars	002-AA	003-AA
on 24C app. bars	102-AA	103-AA
with test switch on 30C app. bars	202-AA	203-AA
with screw terminals	302-AA	303-AA

Reference

Buyer's Guide	No.
Mounting and connection	B03-9301 E
Panel frame for front connection	B03-9354 E
Test system COMBITEST	B03-9510 E
Dimensions	B03-9382 E
Manual	UG03-4511 E