Mounting and Connections

Receipt of the GPU-2000R

When you receive the GPU-2000R, examine it carefully for shipping damage. If any damage or loss is evident, file a claim at once with the shipping agent and promptly notify the nearest ABB sales office. Use normal care in handling to avoid mechanical damage. Keep unit clean and dry.

Short Acceptance Test

Before installing the unit, the following Short Acceptance Test could be performed:

On units equipped with an MMI:

- Power up the relay by applying rated DC control voltage to terminals 1 and 2 (observe polarity).
- Using the arrow keys, go to the Main Menu, scroll to Settings, press <E>, scroll to Unit Information, press <E>. Verify unit information against nameplate, sticker and the bill of material for your project.
- After checking the unit information, press <C> twice to return to the Main Menu. Scroll to Settings and press <E>, in the Settings Menu, scroll to Change Settings and press <E>. In the Change Settings Menu, scroll to Clock and set the unit clock.
- Press <E> to enter the correct time and return to the Change Settings Menu.

On units not equipped with an MMI, connect a PC to the RS-232 port on the front of the unit and use the ECP (External Communication Program) and follow the same process as outlined above.

Installing the GPU-2000R

The GPU-2000R is enclosed in a standard 3U (3 rack units), 19 x 5-inch metal case designed for rack mounting. Figure 5-2 shows the dimensions of the GPU-2000R.

The cover and bezel accessory shown in *Panel Mounting Kit* of this section (horizontal mounting and vertical mounting) is recommended for panel mounting of the unit, particularly when dust tightness of the control compartment must be maintained.

Drawout Feature

The electronic circuit board assembly including the power supply and communications card (if equipped), can be withdrawn from the case. The input transformers and their associated burdens remain in the case, so that all ct circuits remain continuous even with the main assembly removed from the case.

Rear Terminal Block Connections

The rear panel arrangement of terminal blocks and communications ports is shown in Figure 5-1.

Apply only rated dc control voltage as marked on the identification label to the control voltage input terminals 1 and 2, and to the programmable input terminals. Observe polarity. Note that programmable inputs #IN 1 through IN6 (terminals 4-10) have terminal #3 as the common.

Wire the ground stud on the rear panel to the equipment ground bus with at least #10 AWG wire to insure proper grounding and maximum effectiveness of the internal surge protection.

The GPU-2000R provides much flexibility to the user in programming input functions and output tripping and alarming functions. Refer to Section 6 for information on these functions.

Figure 5-5 shows typical basic control connections for the relay. Device 86, hand-reset lockout relay, is employed to require operator intervention on faults detected by the GPU2000R on functions such as 87, 59G, 27G, 51G, and 50G, before the machine can be returned to service. The GPU2000R also includes programmable “seal-in” outputs that could replace the separate 86 if desired. Refer to Section 6.

Trip Coil Monitoring

Consider the use of one of the double-ended inputs, IN7 or IN8, for the Trip Coil Monitor feature. Assign the input to programmable logical input TCM. Connect the positive side of the input to positive control voltage, and the negative side to the Trip bus. A trace current of approximately 6 milliamperes will pass through the input and through the trip circuit when the circuit breaker is closed. Should the trip circuit be interrupted, the input will be de-activated and the relay will issue the TCFA alarm and a message will appear on the MMI.

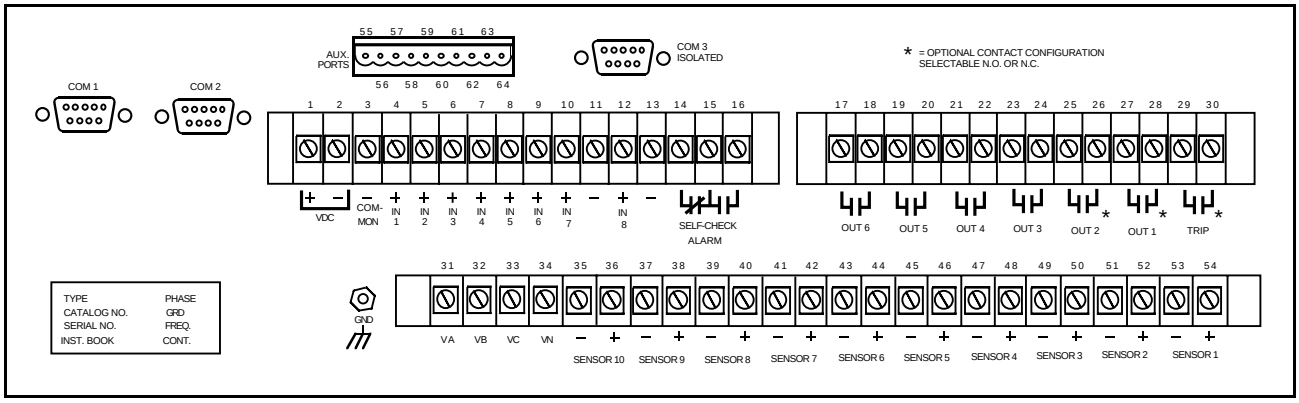

Figure 5-1. Panel Arrangement

Case Dimensions (Standard 19” Rack mount 3 units high)

Dimensions are in: inches
[millimeters]

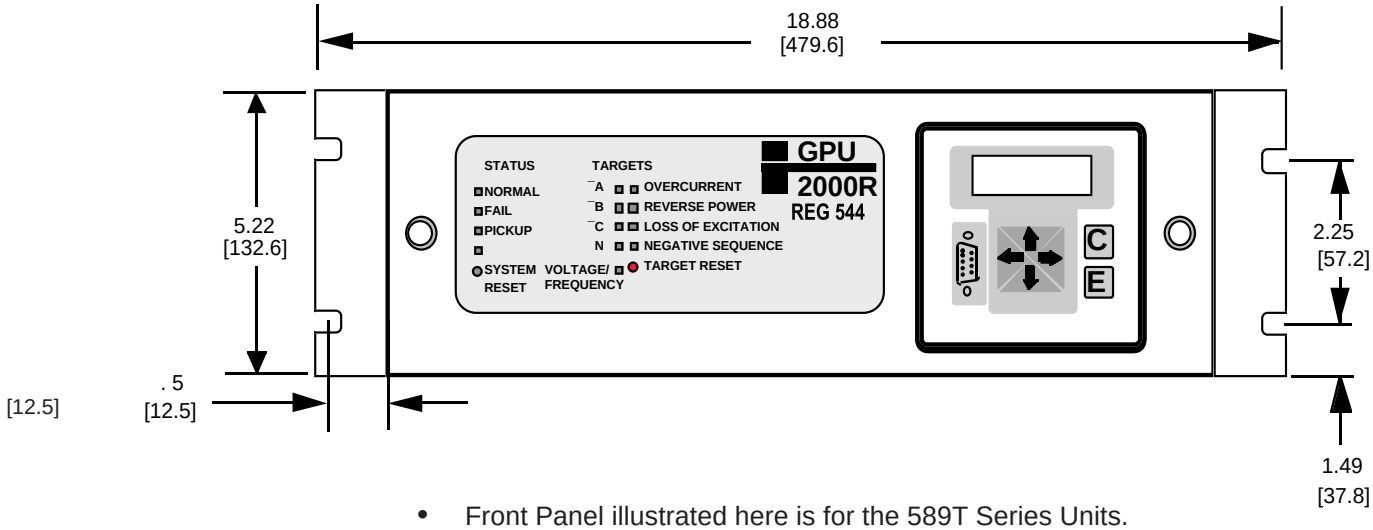

- Front Panel illustrated here is for the 589T Series Units.
- See front cover picture for 589V/589T Series.
- Dimensions are the same for all 589 Series

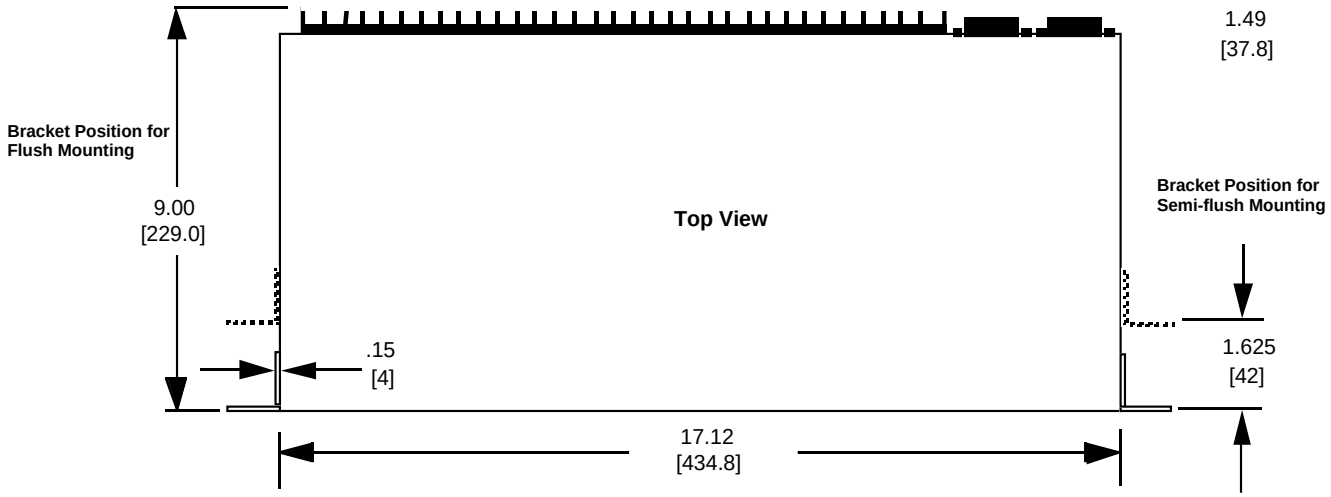

Figure 5-2. Dimensions

Panel Mounting Kit

The complete kit will include a bezel, its associated hardware and gasket, as well as a lens cover with its associated hardware. This kit will provide a means for panel mounting and dustproofing.

Ordering Information:

Horizontal Panel Mounting Kit	604513-K1
Vertical Panel Mounting Kit	604513-K2

Spare Parts List:

Bezel/gasket assembly only	604513-K3
Horizontal lens cover assembly	613724-K1
Vertical lens cover assembly	613724-K2

Horizontal Mounting

Note: The Bezel Assembly is available as an option for mounting the 2000R units in a panel application.

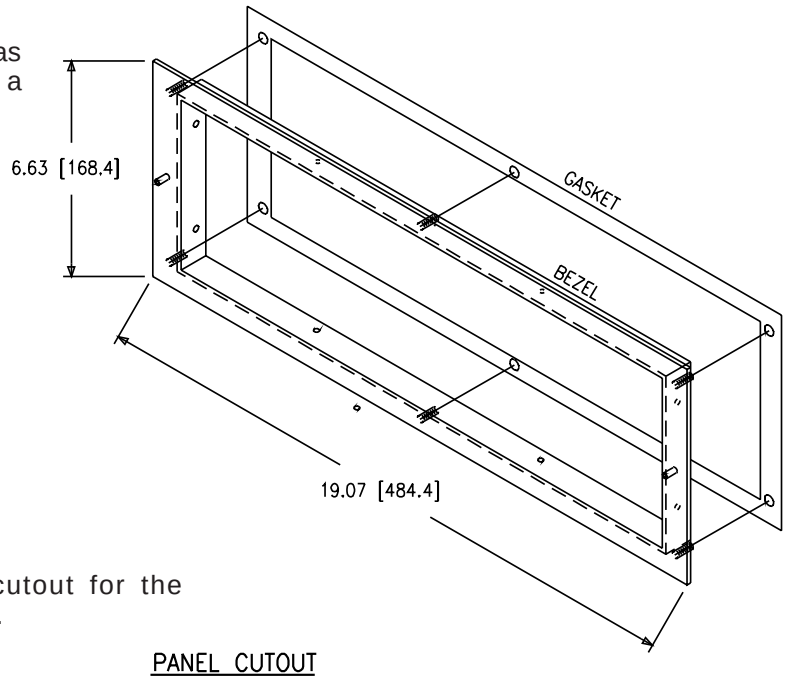

Note: Below is the panel drilling cutout for the DPU-2000R unit and the bezel assembly.

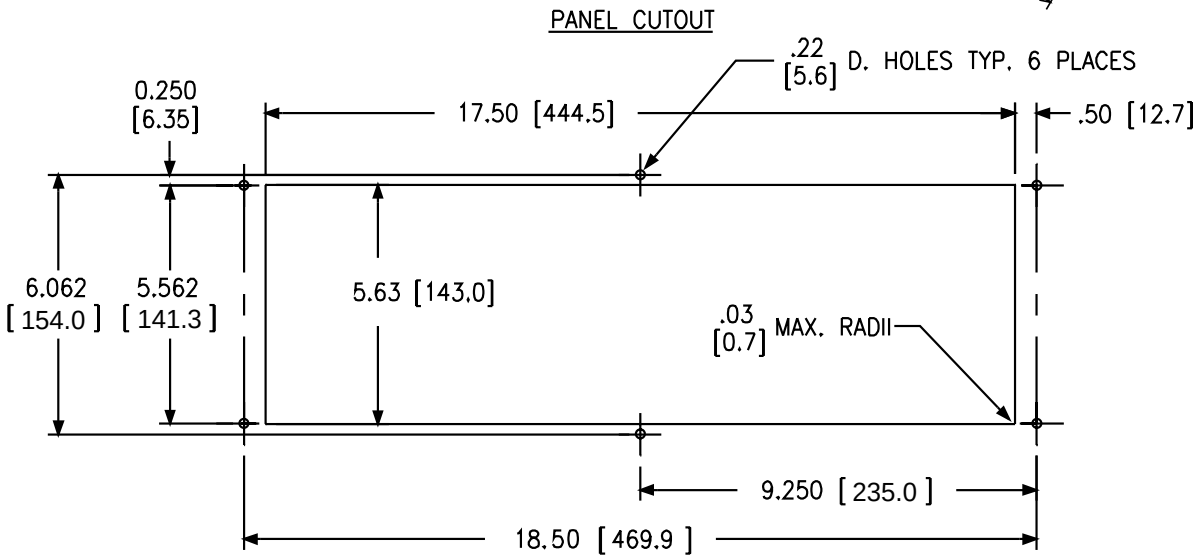

NOTE: DIMENSIONS ARE INCHES [MILLIMETERS]

Vertical Mounting

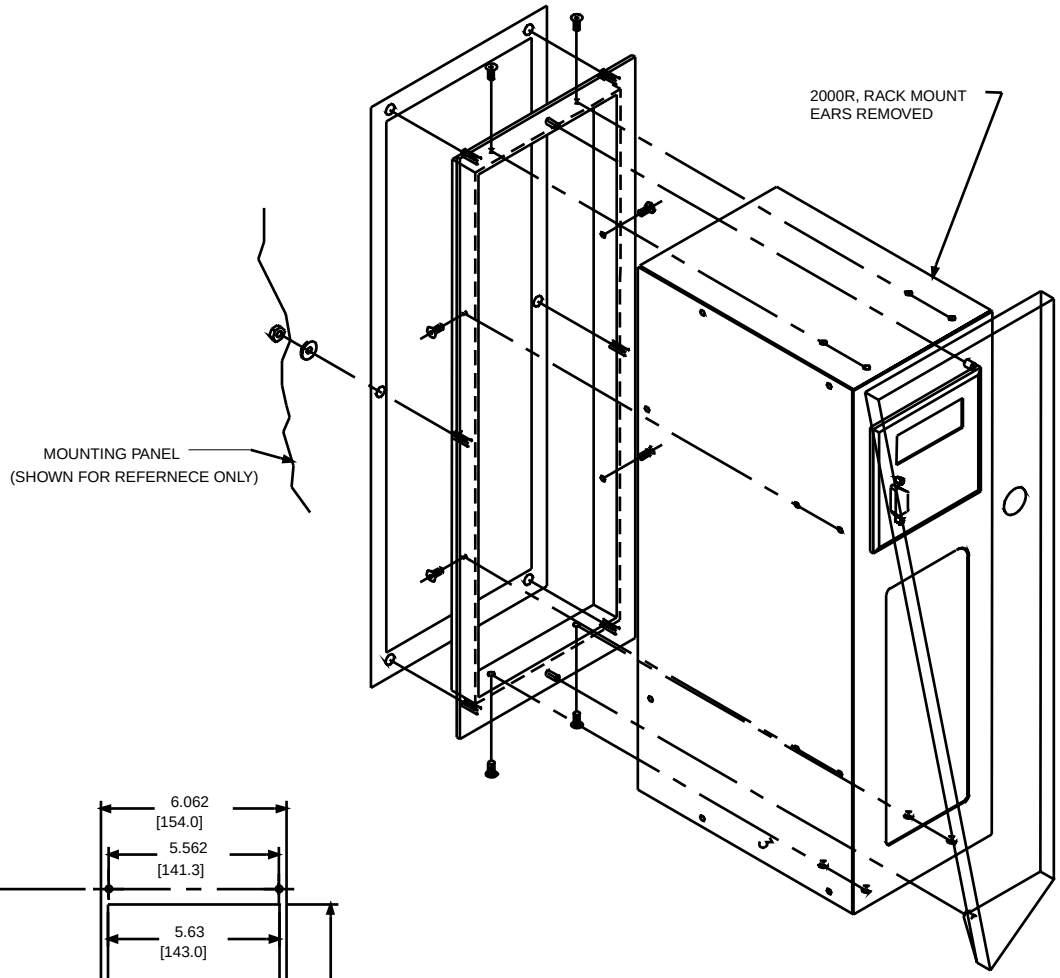

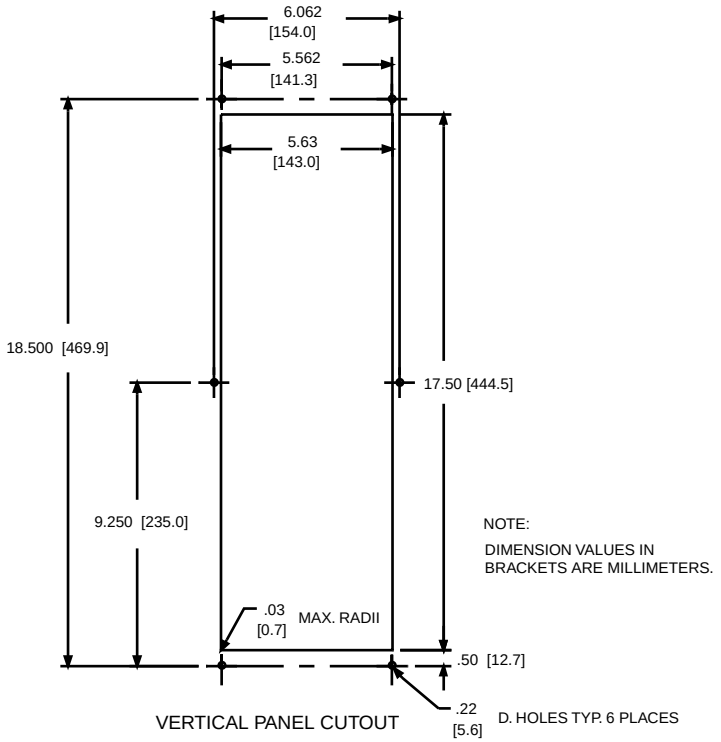

VERTICAL PANEL CUTOUT

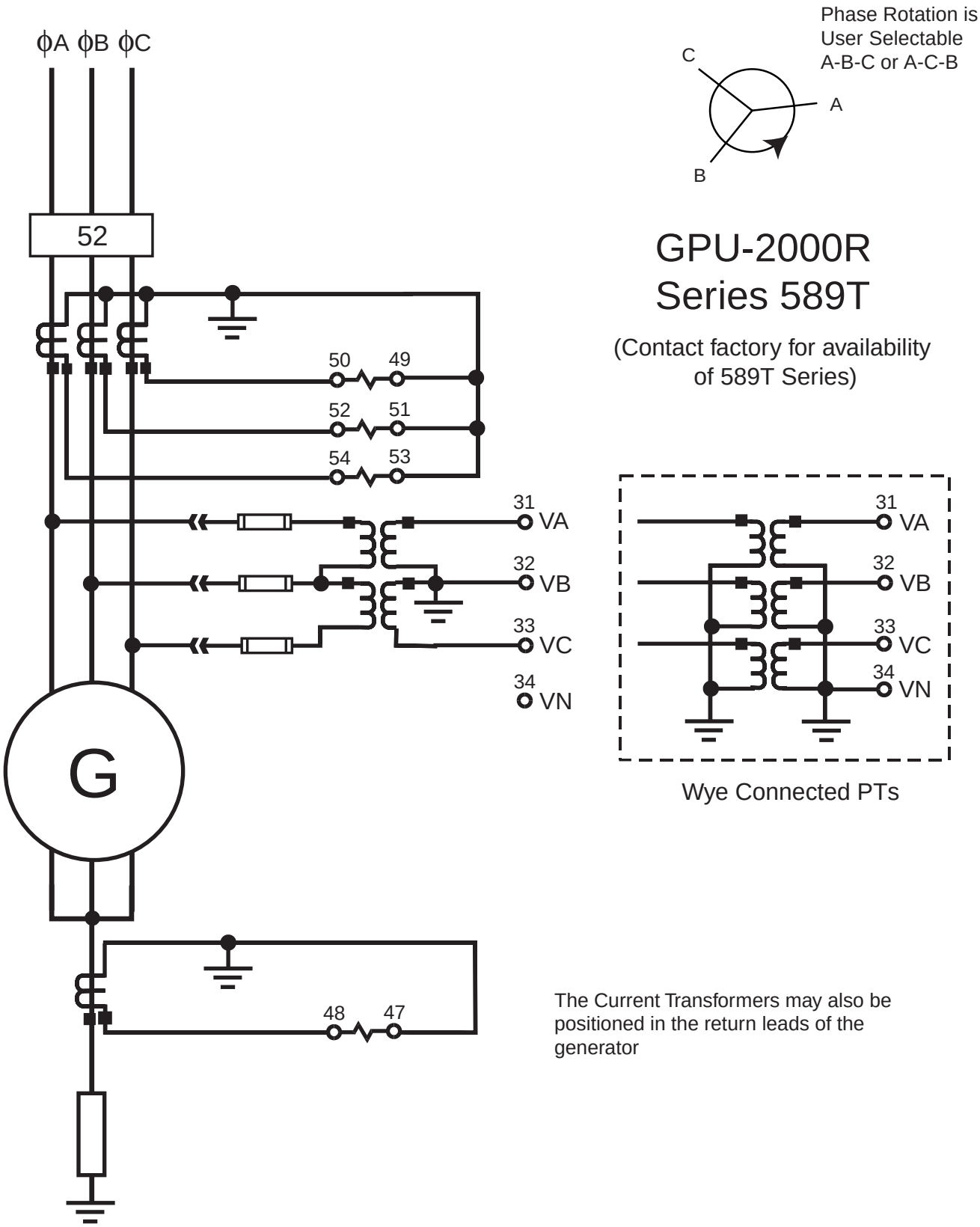

Figure 5-3. Typical Connections, 589T Series Units

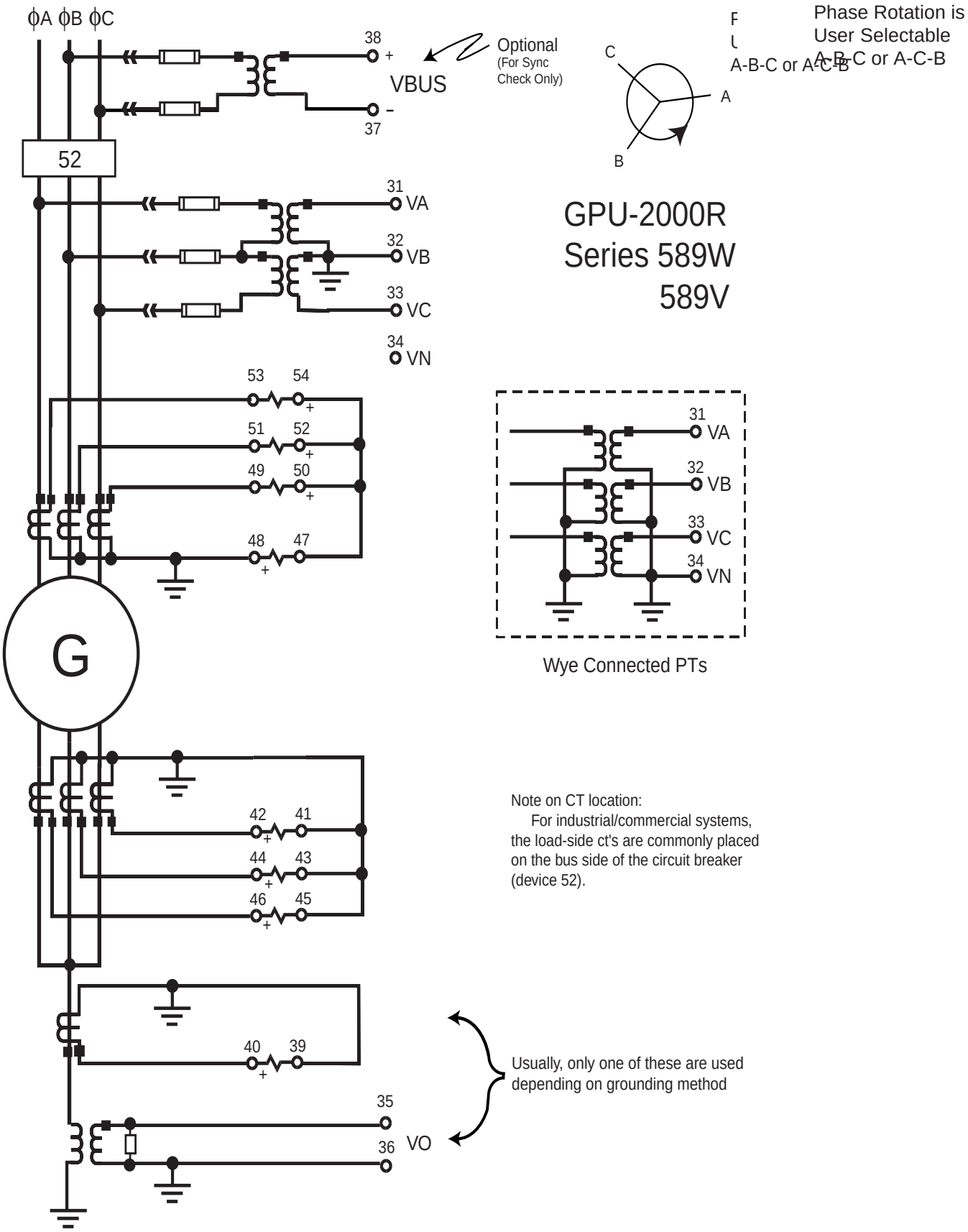

Figure 5-4. Typical Connections, 589W/589V Series Units

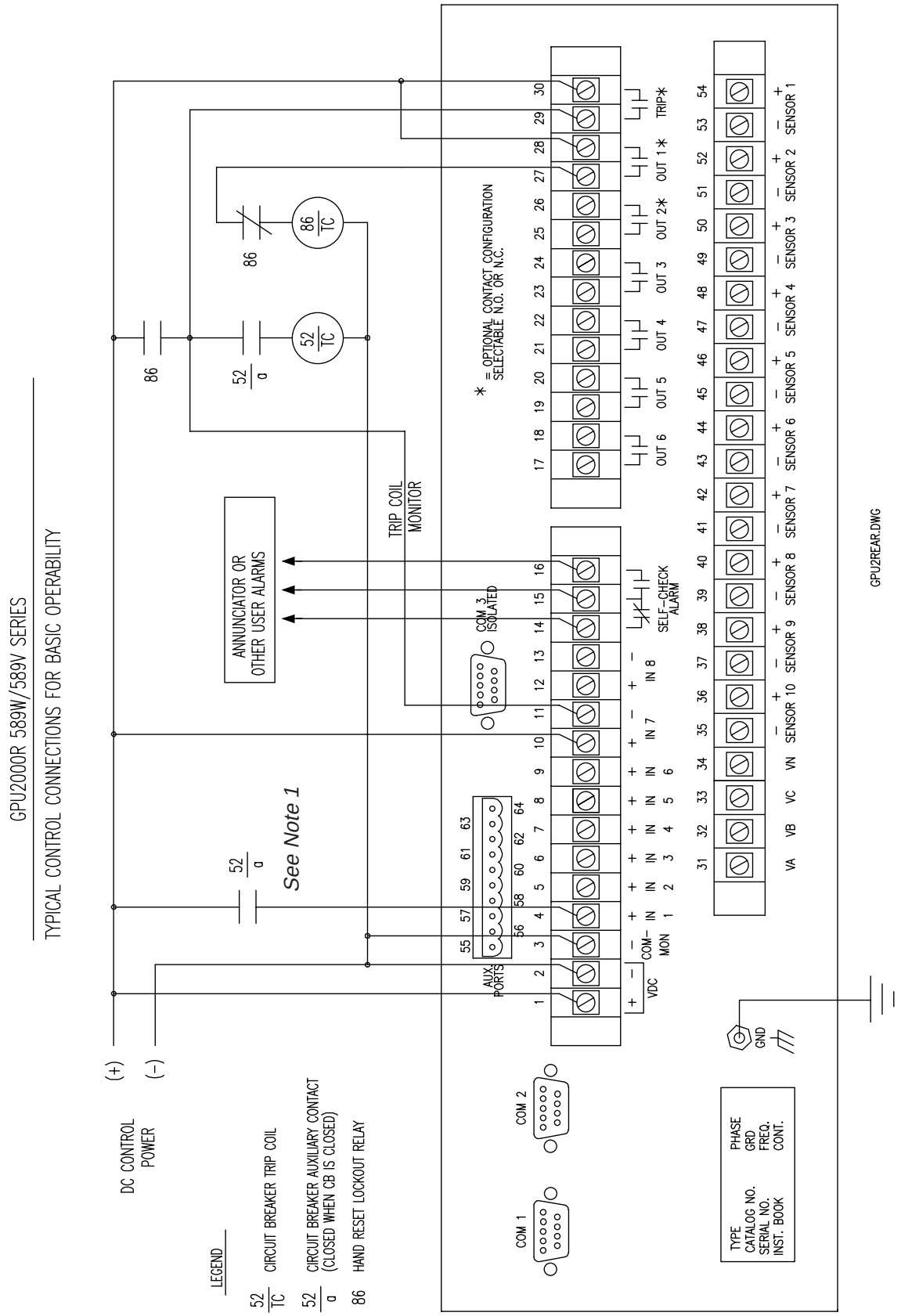

Note 1: If preferred, a 52b circuit breaker auxiliary contact may be used instead, by programming the logical input 52a to be asserted when the contact is open (use "O" instead of "C" in the input logic mapping.

Figure 5-5. GPU-2000R Typical Basic Control Connection

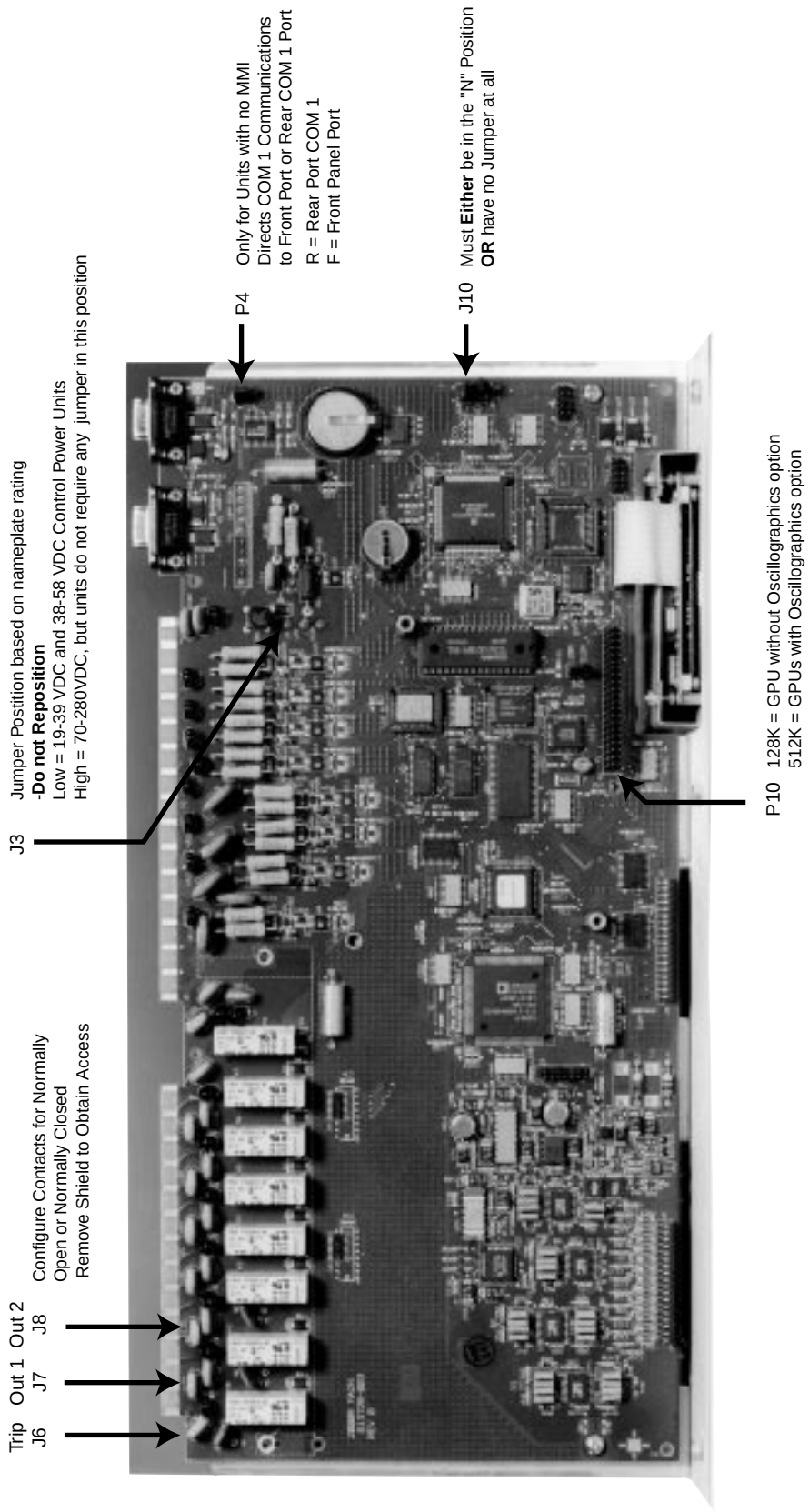

Figure 5-6. Main Circuit Board Jumpers

Communications Ports

The GPU-2000R has a standard 9-pin RS-232C interface on the front for serial port communications. You can connect a computer to this port. There is also at least one serial port on the rear of the unit. Additional ports are optional. Rear Port arrangements are shown Figure 5-1 and described in Section 12.

RS-232 ports are available in two different configurations, Isolated and Non-Isolated. Isolated ports are preferred and provide electrical isolation between the communication port and the rest of the relay.

These rear port options, called Auxiliary Communications ports, can be isolated 9-pin RS-232C, 3-wire RS-485, 2-wire INCOM, IRIG-B, or SCADA Interface Unit (SIU) connections. Because the hardware termination for all these options is on every GPU-2000R, you must refer to the catalog number on the rear of the unit or to the software communications menu to know which rear port option is implemented. An IRIG-B input for precision real-time setting is furnished with the rear communications port catalog options 2, 3, or 4 (see "Ordering Selections," Section 12 of this instruction book). The rear RS-232C port can interface with a modem and a remotely connected computer, or you can attach a computer directly to the rear RS-232C port. The RS-232C ports are configured as data terminal equipment.

The 2000R series also features ABB's innovative RS-485 isolated communications capability available when the optional Auxiliary Communication board is installed. This isolated RS-485 configuration provides superior communication quality recommended for applications in areas of high electrical noise or that require connecting cables longer than 10 feet (3m).

The GPU-2000R supports various byte-oriented protocols. The command message structure and substructures for these protocols are available upon request.

Pin Connections

The pin connections for the various communications ports are shown in Tables 5-1 and 5-2.

Table 5-1. RS-232 Pin Connections

Pin Number	Pin Number
2	Receive data-Relay receives data through this pin.
3	Transmit data-Relay transmits data through this pin.
5	Signal ground-Front port and standard rear ports have signal ground tied to the chassis. There is an optional RS-232 rear port where both data and signal ground are fully isolated.

Table 5-2. RS-485, INCOM, SIU and IRIG-B Pin Connections

Pin Number	Pin Number
64	IRIG-B Minus
63	IRIG-B Positive
62	INCOM
61	INCOM
60	+5 VDC at 100 milliamperes
59	Direction minus
58	Direction positive
57	RS-485 common/VDC return
56	RS-485 minus or SIU minus (aux. comm. port)
55	RS-485 positive or SIU positive (aux. comm. port)

RS-485 Port and Communications Card Internal Jumper Positioning

For all communications hardware options with a single RS-485 port, that port is provided at terminals 55(+), 56 (-), and 57 (com). See Table 5-2.

For communications hardware option #8, dual RS485 ports, terminals 55, 56, and 57 are designated RS485 Rear Port #2, and pins 1(+), 2 (-), and 7(com) of the COM3 DB-9 connector represent RS485 Rear Port #1.

The RS485 port on the GPU-2000R has three associated resistors and jumper links that allow insertion or removal of these resistors, depending on the location of the relay in the network. Jumper link J6 on the communications card is for the termination resistor. A termination resistor should be inserted at the first and last devices on the network. Typically J6 would be set for “IN” for the last relay on the RS485 network; and, J6 would be set in the “OUT” position for all other relays in the loop. The first unit on the network, typically an ABB 245X series convertor, has the terminating resitor built-in. For communication hardware option “8,” dual RS485 ports, J6 is for Port #2 and a similar jumper, J16 is provided for RS485 Port #1.

Jumper links J7 and J8 insert or remove “pull-up” resistors. These resistors establish a known voltage level on the RS485 bus when no units are transmitting, in order to reduce noise. These jumpers should be set to the “IN” position on only one relay at either end of the RS485 loop. If an ABB communications convertor, catalog series 245X, is used on the network, it has these resistors built-in, and all relays can have J7 and J8 in the out position. For communications hardware option “8”, dual RS485 ports, J7 and J8 are for Port #2, and J17 and J18 are for Port #1.

The RS485 cable should be shielded 3 conductor twisted cable. The shield should be grounded at one end of the communications circuit, preferably where the RS485 circuit begins; eg: at the convertor unit. A typical RS485 connection diagram, drawing 604765, is available on request from the factory.

Recommended cables are Alpha #58902, Belden #9729, #9842, #9829 and Carol #58902.

Notes:

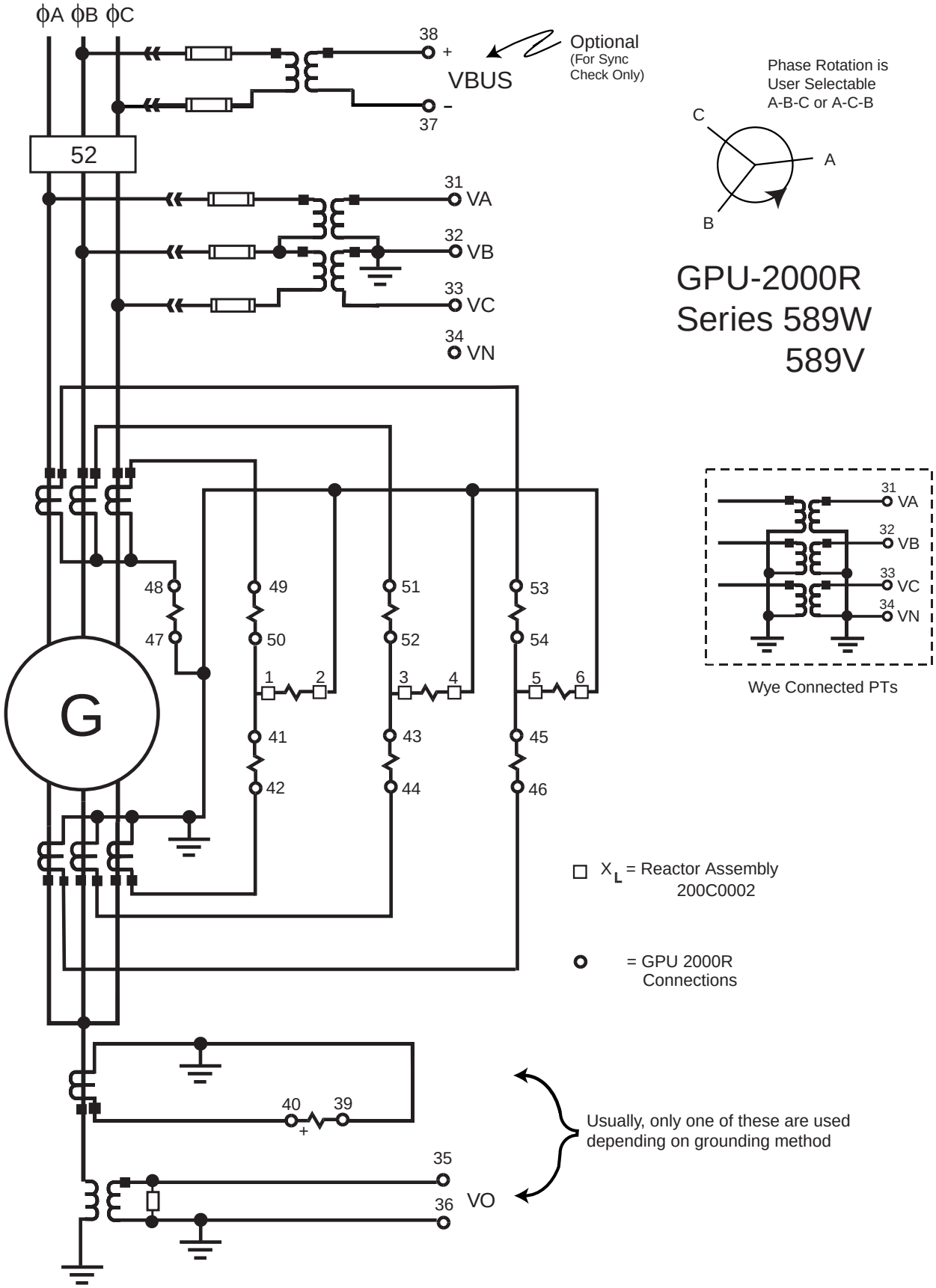

Figure 5-8. Typical Connections, 589W/589V Series Units with Stabilizing ReactorFigure 5-5. GPU-2000R Typical Basic Control Connection

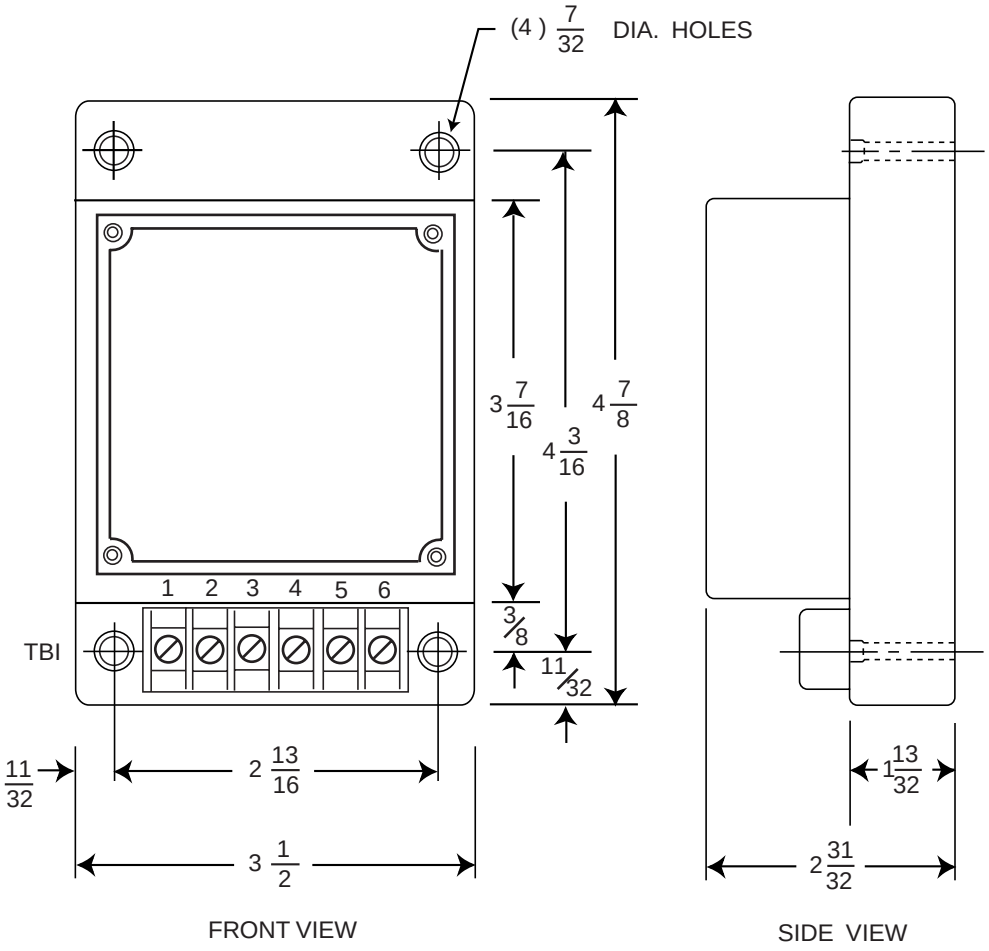

Figure 5-8. Outline for Reactor Catalog 200C0002 (Dimensions in Inches)