Application manual

Protect^{IT} Transformer protection terminal
RET 521*2.5

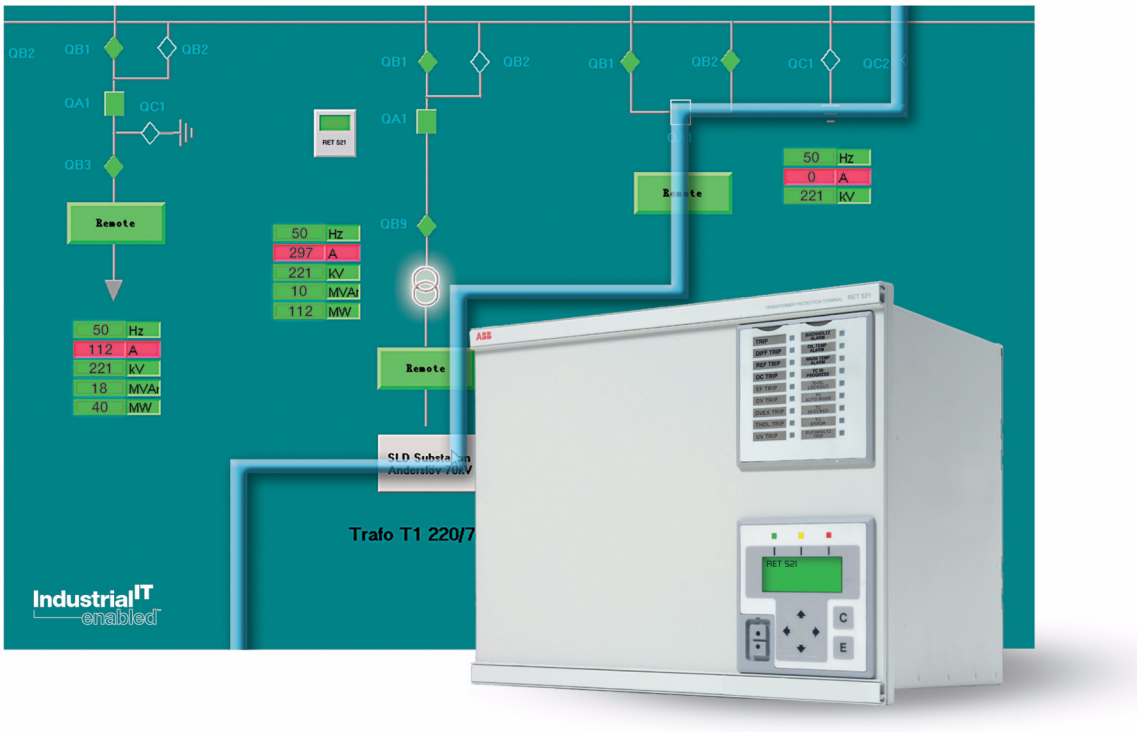

Application manual

Protect^{IT} Transformer protection terminal
RET 521*2.5

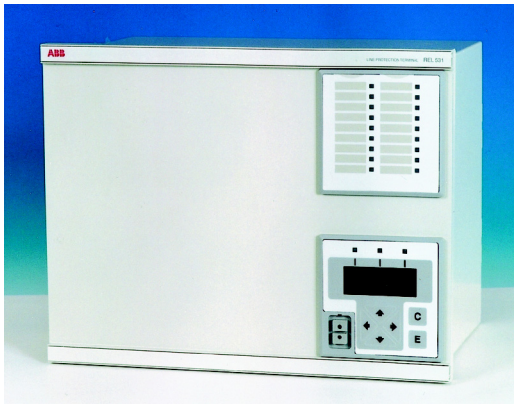

About this manual

DocID: 1MRK 504 037-UEN
Issue date: December 2003
Revision: -

Industrial^{IT}

Industrial IT enabled products from ABB are the building blocks for greater productivity, featuring all the tools necessary for lifecycle product support in consistent electronic form.

Manufacturer:

ABB AutomationTechnology Products AB
Substation Automation
SE-721 59 Västerås
Sweden
Telephone: +46 (0) 21 34 20 00
Facsimile: +46 (0) 21 14 69 18
www.abb.com/substationautomation

Contents

Protection schemes for shunt reactors with RET 521

Protection Scheme for Special Railway Transformers with RET 521

Chapter Page

Application of RET 521

1 Introduction

The numerical transformer terminal RET 521 is designed for fast and selective protection and control of two- and three-winding transformers, auto-transformers, generator-transformer blocks and shunt reactors.

The RET 521 has low requirements on the main Current Transformers and no interposing CTs are necessary.

Flexibility is provided to cover for different applications in form of transformer size, vector groups, system neutral earthing and extension of protection functions according to the user's preference. The selection of functionality from the modular hardware and software is made according to the requirements for selectivity and reliability and following the user's preference. Big and important transformers such as generator-transformer blocks or large network transformers can use two RET 521 and include the modular protection software selectively to obtain redundancy.

Smaller transformers and shunt reactors can include the modular software in one RET 521 and can also use the programmable logic to provide trip or indication for external protections (e.g. Buchholz). Thus providing a very compact design for protection and control.

The RET 521 optionally includes a voltage control function for transformers with on-load tap changers, thus providing a very versatile modular unit for protection and control of the major number of power transformers.

The RET 521 includes setting adaptation to power transformer rating and instrument transformer ratios to allow protection settings in "per unit" (p.u.) or percent (%), of the power transformer rating, thus facilitating the protection settings to an optimum.

The RET 521 is supplied for 2-winding applications and 3-winding applications as indicated below in paragraph 1.1 and 1.2.

1.1 2-winding applications

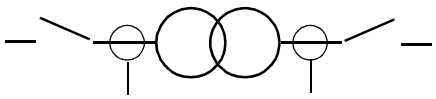

Fig. 1 2-winding power transformer

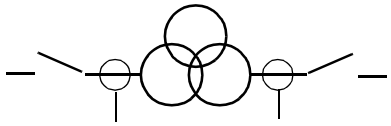

Fig. 2 2-winding power transformer with unconnected delta tertiary winding

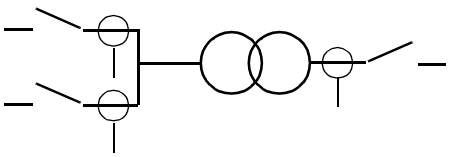

Fig. 3 2-winding power transformer with 2 circuit breakers on one side

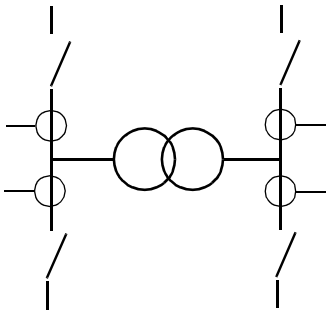

Fig. 4 2-winding power transformer with 2 circuit breakers and 2 CT-sets on both sides

1.2 3-winding applications

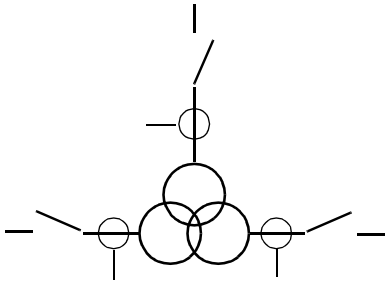

Fig. 5 3-winding power transformer with all three windings connected

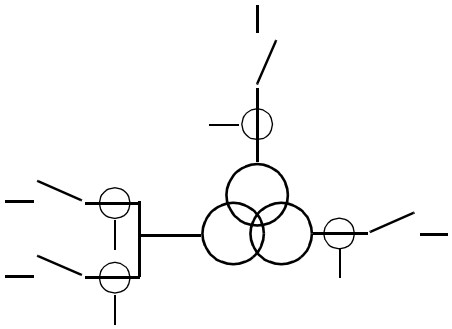

Fig. 6 3-winding power transformer with 2 circuit breakers and 2 CT-sets on one side

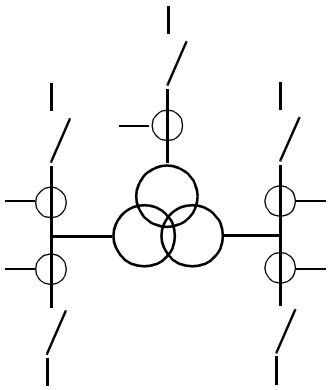

Fig. 7 3-winding power transformer with 2 circuit breakers and 2 CT-sets on 2 out of 3 sides

2 Service value reading

The Service report menu lets you display information about the:

- measured values from protection functions.
- operation conditions for protected objects in the power system.
- terminal.

The amount of available information depends on the number of basic and optional functions in a RET 521 terminal.

A certain subgroup is displayed on the local HMI if the corresponding function is installed in the terminal. These subgroups describe possible types of information:

- Analog Input Module (AIM)
- Binary Outputs
- Differential currents
- DisturbReport
- EarthFault
- Frequency Measurement
- MIM
- OverCurrent
- General Function
- Overexcitation
- OverVoltage
- Thermal Overload
- UnderVoltage
- Voltage Control
- Frequency Protection
- Active Group
- Internal time

3 Terminal identification

3.1 General

You can store the identification names and numbers of the station, the transformer, and the terminal itself in the terminal. This information can be read on the built-in HMI or when communicating with the terminal through a PC using SMS or SCS.

The internal clock is used for time tagging of:

- Internal events
- Disturbance reports
- Events in a disturbance report
- Events transmitted to the SCS substation control system

This implies that the internal clock is very important. The clock can be synchronized, (see the section “Time synchronization”), to achieve higher time tagging correlation accuracy between terminals. Without synchronization, the internal clock is only useful for comparisons among events within the terminal.

The ordering number, serial number, software version and identity number of I/O modules are displayed on the local HMI. For each hardware module and for the frame there is the possibility to store a user defined note.

3.2 Terminal identification settings

The user configurable identification settings can be set from the HMI menu branch:

Config
Ident

The following parameters can be set

Table 1: User configurable terminal identification settings

Parameter	Setting range	Description
Unit No	(0 - 99999)	Unit No.
Unit Name	16 character string	Unit Name
Object No	(0 - 99999)	Object No.
Object Name	16 character string	Object Name
Station No	(0 - 99999)	Station No.
Station Name	16 character string	Station Name

3.3 Setting the terminal clock

The internal clock are set from the HMI menu branch:

Set
Time

Time is set by modifying the following parameters:

Table 2: Terminal date and time

Parameter	Setting range	Description
Date		Date in the format YYYY-MM-DD
Time		Time in the format HH:MM:SS

The current internal time is read from:

ServRep
Time

Note: When time synchronization is enabled, time setting is not possible.

3.4 Displaying terminal identification numbers

The terminal serial number and software version and more can be displayed from the HMI menu branch:

TermSt
IdentNo
Observe
General

The following terminal information are displayed:

Table 3: Terminal identification numbers

Parameter	Description
OrderingNo	RET 521 terminal ordering number
TermSerialNo	RET 521 terminal serial number
SW-version	SW version for main program
CPU-module	CPU-module

3.5 I/O module identification

The identity of each I/O module can be displayed on the HMI by following the menu branch:

TermStat
IdentNo
Observe
I/O-mod

The present I/O module is identified by its parameter. However, these parameters are configuration dependent. In the following table the mnemonic <*iomodulename*> should be replaced by whatever type of module present, e.g. AIM1, BIM1, BOM2 etc.

Table 4: I/O module identification

Parameter	Description
PCIP3-<*iomodulename*>	Identity number of module in HW SlotNo 3
PCIP7-<*iomodulename*>	Identity number of module in HW SlotNo 7
CANP9-<*iomodulename*>	Identity number of module in HW SlotNo 9
CANP10-<*iomodulename*>	Identity number of module in HW SlotNo 10
CANP11-<*iomodulename*>	Identity number of module in HW SlotNo 11
CANP12-<*iomodulename*>	Identity number of module in HW SlotNo 12

3.6 User configurable module identification

The identity of some modules can be user defined using the HMI menu branch:

TermStat
IdentNo
Noted

The following parameters can be edited to enter a custom text for description of each module.

Table 5: User configurable module identification

Parameter	Description
Trafo-module	Trafo-module
ADC-module	ADC-module
HMI-module	HMI-module
Frame	Mechanical frame
Power-module	Power-module
LON-module	LON-module

4 Time synchronization

4.1 General

The terminal has a built-in real time clock and calender. The calendar starts with 1970 and lasts till 2038 and takes leap years into consideration. As with all real time clocks, it has a certain inaccuracy. Thus, in order to have the correct time for time tagging of events etc., it has to be synchronized. The terminal can accept synchronization via either of the serial ports or via one of the binary inputs. Synchronization via the serial ports will be done with absolute or relative time. Synchronization via a binary input is done with minute pulses.

4.2 Synchronization via the serial ports

4.2.1 Synchronization from SCS

The SCS will broadcast the synchronization signals on the LON bus with absolute time every minute and with relative time every second. In order to get the correct absolute time, the PC for SCS must be synchronized from a world wide source, e.g. from a satellite or radio clock.

4.2.2 Synchronization from SMS

The SMS will broadcast the synchronization signals on the SPA bus with absolute time every minute and with relative time every second. In this case a data communicator, e.g. SRIO 500 or SRIO 1000 is required. For proper synchronization the data communicator should be synchronized from a world wide source, e. g. a satellite or radio clock.

4.3 Synchronization via a binary input

The terminal accepts minute pulses to a binary input. These minute pulses can be generated from e.g. station master clock. In case the station master clock is not synchronized from a world wide source, time will be a relative time valid for the substation.

In case the objective of synchronization is to achieve a relative time within the substation and no station master clock with minute pulse output is available, a simple minute pulse generator can be designed and used for synchronization of the terminals.The minute pulse generator can be created using the logical elements and timers available in the terminal.

5 Activation of setting groups

5.1 General

Different conditions in networks of different voltage levels require high adaptability of the used protection and control units to best provide for dependability, security and selectivity requirements. Protection units operate with higher degree of availability, especially, if the setting values of their parameters are continuously optimized regarding the conditions in power system.

Therefore, the terminal has been equipped with four independent groups (sets) of setting parameters. These groups can be activated at any time in different ways:

- Locally, by means of the local human-machine interface (HMI).
- Locally, by means of a PC, using the Parameter Setting Tool (PST) in CAP 540 or using the Station Monitoring System (SMS).
- Remotely, by means of the Parameter Setting Tool (PST) in the Station Control System (SCS).
- Remotely, by means of the Station Monitoring System (SMS).
- Locally, by means of up to four programmable binary inputs.

6 Restricted settings

Do not set this function in operation before carefully reading these instructions and configuring the HMI--BLOCKSET functional input to the selected binary input.

The HMI--BLOCKSET functional input is configurable only to one of the available binary inputs. For this reason, the terminal is delivered with the default configuration, where the HMI--BLOCKSET signal is connected to NONE-NOSIGNAL.

6.1 General

Setting values of different control and protection parameters and the configuration of different function and logic circuits within the terminal are important not only for reliable and secure operation of the terminal, but also for the entire power system.

Non-permitted and non-coordinated changes, done by unauthorized personnel, can cause severe damages in primary and secondary power circuits. They can influence the security of people working in close vicinity of the primary and secondary apparatuses and those using electric energy in everyday life.

For this reason, the terminal include a special feature that, when activated, blocks the possibility to change the settings and/or configuration of the terminal from the HMI module.

All other functions of the local human-machine communication remain intact. This means that an operator can read all disturbance reports and other information and setting values for different protection parameters and the configuration of different logic circuits.

This function permits remote resetting and reconfiguration through the serial communication ports, when the setting restrictions permit remote changes of settings. The setting restrictions can be set only on the local HMI.

6.2 Installation and setting instructions

Fig. 8 presents the combined connection and logic diagram for the function.

Configuration of the HMI--BLOCKSET functional input signal under the submenu is possible only to one of the built-in binary inputs:

Configuration
BuiltInHMI

Carefully select a binary input not used by or reserved for any other functions or logic circuits, before activating the function.

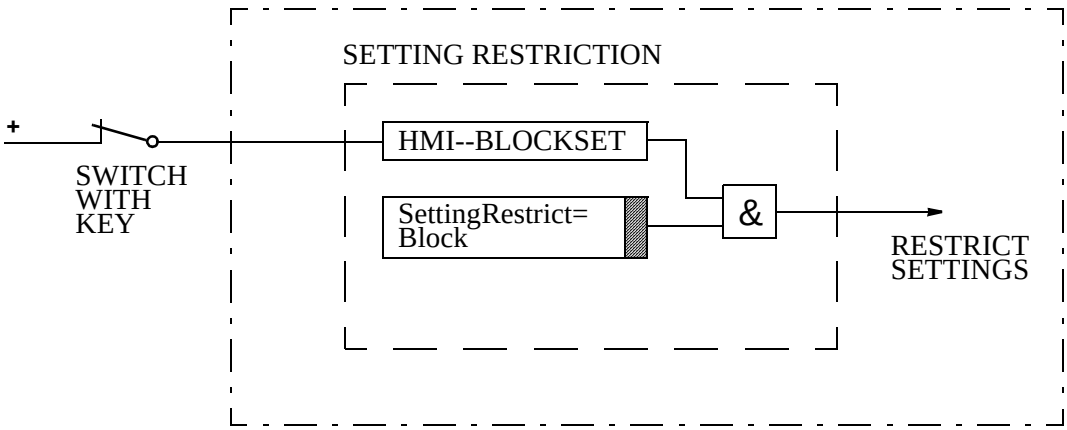

Fig. 8 Connection and logic diagram for the BLOCKSET function.

Set the setting restriction under the submenu:

Configuration
BuiltInHMI
SettingRestrict

to SettingRestrict = Block.

The selected binary input must be connected to the control DC voltage via a normally closed contact of a control switch, which can be locked by a key. Only when the normally closed contact is open, the setting and configuration of the terminal via the HMI is possible.

Application of functions

7 Tripping Logic

7.1 General

Tripping logic blocks are provided where up to sixteen input signals can be gated together in an or-gate and then connected to e.g. a trip output relay. Furthermore up to twelve individual trip logic blocks exist so that twelve individual output relays can be managed. Each block has been provided with possibility to set a minimum pulse length of the trip signal.

When the trip signal is routed via the trip block the LED on the HMI shows that a TRIP has occurred with a steady red light and the text TRIP is shown in the highest menu window.

7.2 Functionality

The function block TRIP (TR) has got eighteen inputs and one output.

Sixteen inputs which are designated TRnn-INPUT01 to TRnn-INPUT16, are connected to an or-gate. The two remaining inputs are designated TRnn-BLOCK and TRnn-SETPULSE.

The output designated TRnn-OUT is set to 1 when any of the sixteen inputs TRnn-INPUTxx is set to 1 and that state is maintained as long as any input is active or as long as the setting on input TRnn-SETPULSE states. This make sure that a minimum duration of the output trip pulse can be achieved for a short activation of an input signal. The settable time can be set to zero seconds, if no extra delay at reset of an input signal is allowed.

A blocking input TRnn-BLOCK is available which, when set to 1, will inhibit an eventual trip output. This blocking input does not reset the time pulse circuit if this did not time out. Therefore to securely block the output, the TRnn-BLOCK must be activated at least as long as the time setting on TRnn-SETPULSE and also at least as long as any input signal is active.

When the output signal TRnn-OUT is set to 1 on any of the twelve TRIP function blocks the right LED on the HMI is activated with a red steady light and the text TRIP is shown in the highest menu window. To reset this LED do the following sequence on the HMI.

Disturbances

Clear LEDs

If a lockout is required for certain trip signals this can easily be achieved by feeding back the output signal to an input. This signal of course has to be routed via some gate which can a provide a reset of the feedback signal.

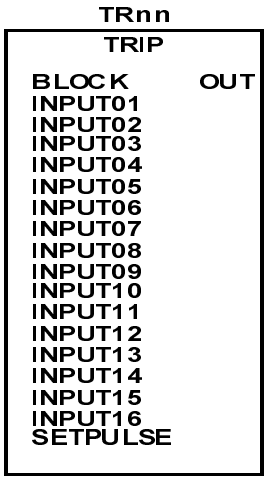

en01000246.vsd

7.3 Setting

The range of the setting is 0.00 - 60.00 s with the resolution 0.01 s and with the default setting 0.15 s. The setting can only be done with the help of the CAP tool.

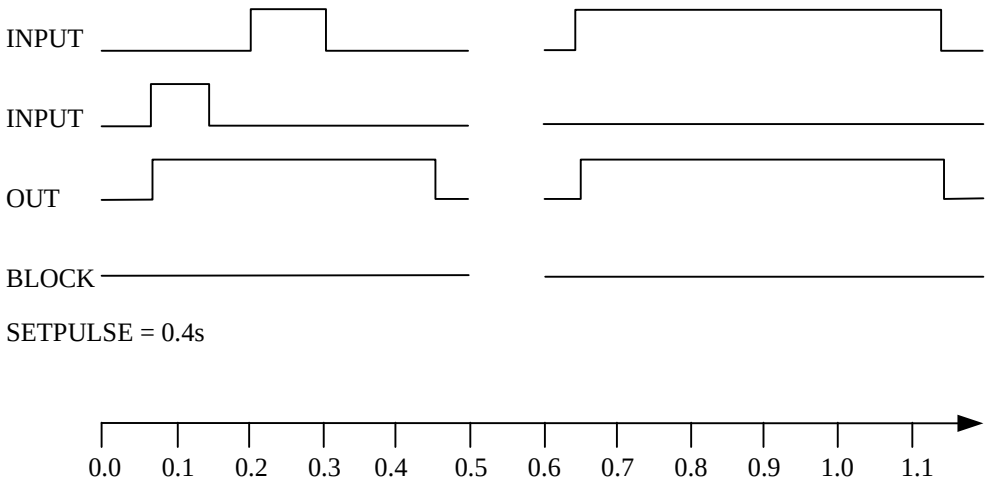

en01000244.vsd

Fig. 9 Example timing diagram

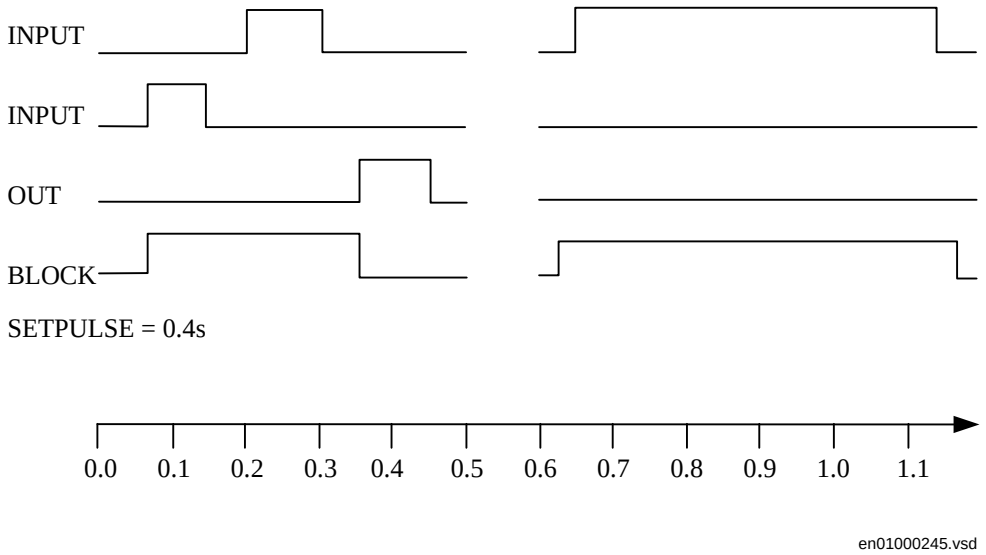

Fig. 10 Example timing diagram

8 Terminal HW structure (THWS)

8.1 General

This section describes the terminal hardware structure of the I/O system that is used to add, remove, or move I/O modules in the RET 521 transformer terminal.

Two different I/O-buses are used in the terminal. These are the PCI and the CAN busses.

AIM, ***A***nalog ***I***nput ***M***odules with 10 analogue input channels will be connected to the PCI bus, which can accommodate a maximum number of two slots, intended for the AIM. The maximum number of AIM modules in a RET 521 is two.

Four different types of I/O modules can be connected to the CAN bus, which can accommodate a maximum number of four slots, intended for I/O and analog input modules.

Available I/O modules that can be connected to the CAN bus:

- BIM, ***B***inary ***I***nput ***M***odule with 16 binary input channels
- BOM, ***B***inary ***O***utput ***M***odule with 24 binary output channels
- IOM, ***I***nput/***O***utput ***M***odule with 8 binary input and 12 binary output channels
- MIM, ***m***A ***I***nput ***M***odule with 6 analogue input channels

To configure, connect the function blocks that represent each I/O module (AIM, BIM, BOM, IOM, and MIM) to a function block for the I/O hardware positions (THWS).

8.2 Functionality

Each module can be placed in any I/O slot for the corresponding bus in the product. To add, remove, or move modules in the product, reconfigure the product by using the CAP 531 configuration tool. CAP 531 is included in the CAP 540 configuration and setting tool.

Users refer to the I/O slots by the physical slot numbers, which also appear in the product drawings. Available slots on the PCI bus for AIM are P3 and P7. The slots for the CAN bus are P9, P10, P11, and P12.

If the user-entered configuration does not match the actual configuration in the terminal, an error output is activated on the function block, which can be treated as an event or alarm, the green LED starts to flash and a fail message is displayed on the HMI:

```
Fail
RET 521 ver 2.5
C=Clear LEDs
E=Enter menu
```

Fig. 11 Fail display

The AIM module is represented by a function block AIMx (x = 1, 2). Only two AIMx blocks can be used together in RET 521*2.5. The AIMx function block is connected to the THWS block to define the slot position of the AIM module. The AIM modules can be of three different types (9I+1U, 8I+2U or 7I+3U). The used type is defined by the function block AIMx, which is chosen with a user-configurable function selector. As for the BIM, BOM and IOM, the same communication addresses will be used for all three types of AIM modules.

The BIM, BOM, and IOM share the same communication addresses for parameters and configuration. So they must share I/O module 01-04 (IOxx), which are the same function block. A user-configurable function selector per I/O module function block determines which type of module it is.

All names for inputs and outputs are inputs on the function blocks and are set by using the CAP 53l configuration tool.

I/O modules that are not configured are not supervised. When an I/O module is configured as a logical I/O module (AIM, BIM, BOM, IOM, or MIM), the *logical I/O modules* are supervised.

Each logical I/O module has an error flag that is set if anything is wrong with any signal or the whole module. The error flag is also set when there is no physical I/O module of the right type present in the connected slot. When the error flag is set, the fail message (see Fig. 11) is displayed accompanied by the flashing green LED, and the erroneous module is pointed out.

8.3 Configuration

The configuration is made in two steps by using the CAP 531 configuration tool:

1. **Set the function selector for the logical I/O module to the type of I/O module that is used, AIM, BIM, BOM, IOM or MIM.**
2. **Connect the POSITION input of the logical I/O module to a slot output of the THWS function block.**

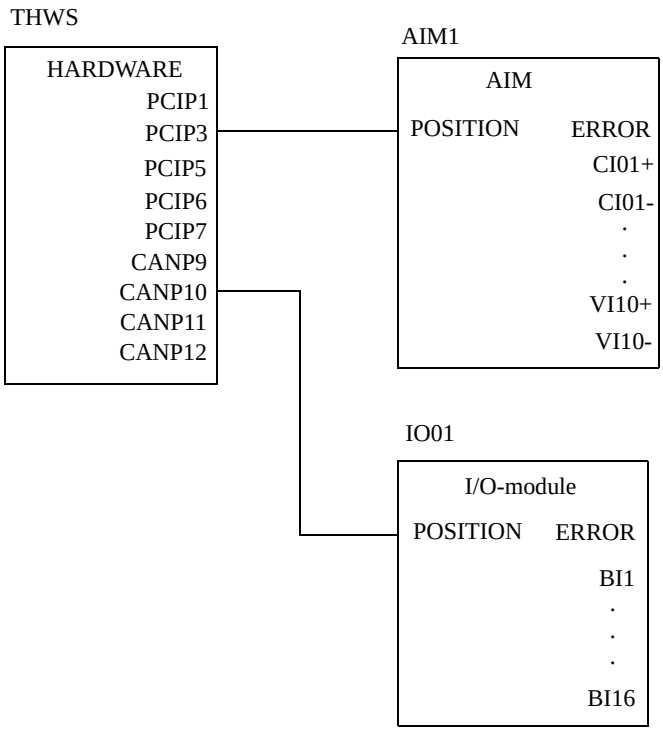

Fig. 12 Example of an I/O-configuration in the CAP 531 configuration tool for RET 521 with one AIM and one BIM

8.4 Setting

You can set the input names for analogue input, binary input and output modules (AIM, BIM, BOM, IOM or MIM) from the CAP 531 configuration tool.

The binary input module (BIM) has a suppression function that blocks oscillating inputs on the module. You can set the oscillation blocking/release frequencies from the PST or from the built-in HMI.

Refer to separate documents to set parameters from the PST or from the built-in HMI for the analog input modules (AIM) and the mA input modules (MIM).

9 Activation of setting groups (GRP)

9.1 General

Different conditions in networks of different voltage levels require high adaptability of the used protection and control units to best provide for dependability, security and selectivity requirements. Protection units operate with higher degree of availability, especially, if the setting values of their parameters are continuously optimized regarding the conditions in power system.

The operational departments can plan different operating conditions for the primary equipment. The protection engineer can prepare in advance for the necessary optimized and pre-tested settings for different protection functions. Four different groups of setting parameters are available in the terminal. Any of them can be activated automatically through up to four different programmable binary inputs by means of external control signals.

The terminal have four independent groups (sets) of setting parameters. These groups can be activated at any time in different ways:

- Locally, by means of the local human-machine interface (HMI).
- Locally, by means of a PC, using the Parameter Setting Tool (PST) in CAP 540 or using the Station Monitoring System (SMS).
- Remotely, by means of the Parameter Setting Tool (PST) in Station Control System (SCS).
- Remotely, by means of the Station Monitoring System (SMS).
- Locally, by means of up to four programmable binary inputs.

9.2 Functionality

9.2.1 Activation by using binary inputs

The number of the signals configured must correspond to the number of the setting groups to be controlled by the external signals (contacts).

The voltage need not be permanently present on one binary input. Any pulse, which must be longer than 400 ms, activates the corresponding setting group. The group remains active until some other command, issued either through one of the binary inputs or by other means (local HMI, PST, SMS, SCS), activates another group. One or more inputs can be activated at the same time. If a function is represented in two different groups and both the groups are active, the group with lowest identity has priority. This means that group 2 has higher priority than group 4 etc.

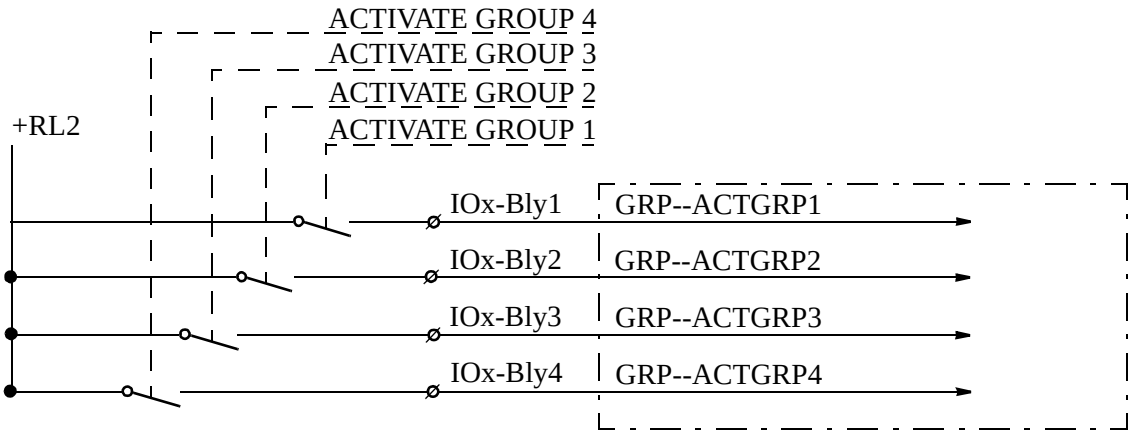

Figure 13: Connection of the function to external circuits.

The above example includes four output signals as well, for confirmation of which group that is active.

9.2.2 Using the HMI

Change active group by using the HMI menu branch:

Settings
ChangeAct Grp

9.2.3 Using SMS/SCS

Operating procedures for the PC aided methods of changing the active setting groups are described in the corresponding SMS documents and instructions for the operators within the SCS are included in the SCS documentation.

10 Configurable logic (CL)

10.1 General

Different protection, control, and monitoring functions within the REx 5xx protection, control and monitoring terminals are quite independent as far as their configuration in the terminal is concerned. You cannot enter and change the basic algorithms for different functions. You can configure different functions in the terminals to suit special requirements for different applications.

For this purpose, you need additional logic circuits to configure the terminals to meet your needs and also to build in some special logic circuits, which use different logic gates and timers.

10.2 Function

10.2.1 Inverter (INV)

The INV function block is used for inverting boolean variables.

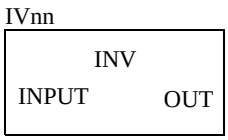

The output signal from the INV function block is set to 1 if the input signal is 0 and is set to 0 when the the input signal is 1. See truth table below.

Table 6: Truth table for the INV function block

INPUT	OUT
1	0
0	1

10.2.2 OR

OR function blocks are used to form general combinatory expressions with boolean variables.

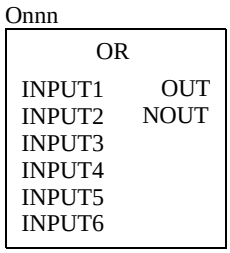

The output signal (OUT) is set to 1 if any of the inputs (INPUT1-6) is 1. See truth table below.

Table 7: Truth table for the OR function block

INPUT1	INPUT2	INPUT3	INPUT4	INPUT5	INPUT6	OUT	NOUT
0	0	0	0	0	0	0	1
0	0	0	0	0	1	1	0
0	0	0	0	1	0	1	0
. . .	. . .	. . .	. . .	. . .	. . .	1	0
1	1	1	1	1	0	1	0
1	1	1	1	1	1	1	0

10.2.3 AND

AND function blocks are used to form general combinatory expressions with boolean variables.

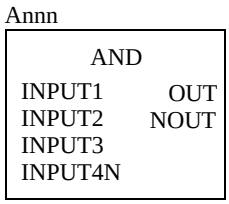

The output signal (OUT) is set to 1 if all the INPUT1-3 are 1 and INPUT4N is 0. See truth table.

Table 8: Truth table for the AND function block

INPUT1	INPUT2	INPUT3	INPUT4N	OUT	NOUT
0	0	0	1	0	1
0	0	1	1	0	1
0	1	0	1	0	1
0	1	1	1	0	1
1	0	0	1	0	1
1	0	1	1	0	1
1	1	0	1	0	1
1	1	1	1	0	1
0	0	0	0	0	1
0	0	1	0	0	1
0	1	0	0	0	1
0	1	1	0	0	1
1	0	0	0	0	1
1	0	1	0	0	1
1	1	0	0	0	1
1	1	1	0	1	0

10.2.4 Timer

The configuration logic TM timer and TL timer have outputs for delayed input signal at drop-out and at pick-up.

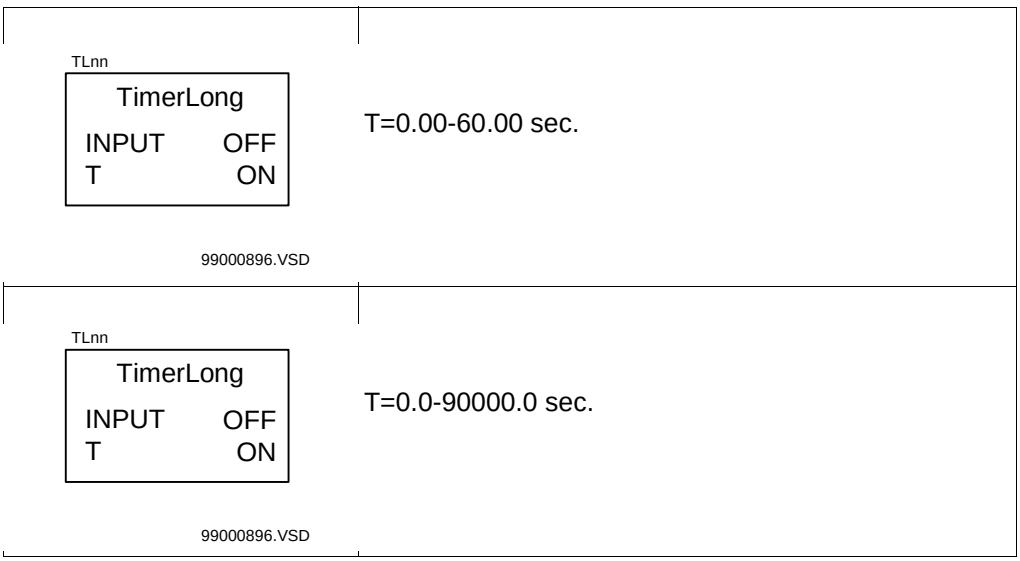

The input variable to INPUT is obtained delayed a settable time T at output OFF when the input variable changes from 1 to 0 in accordance with the time pulse diagram, Fig. 14. The output OFF signal is set to 1 immediately when the input variable changes from 0 to 1.

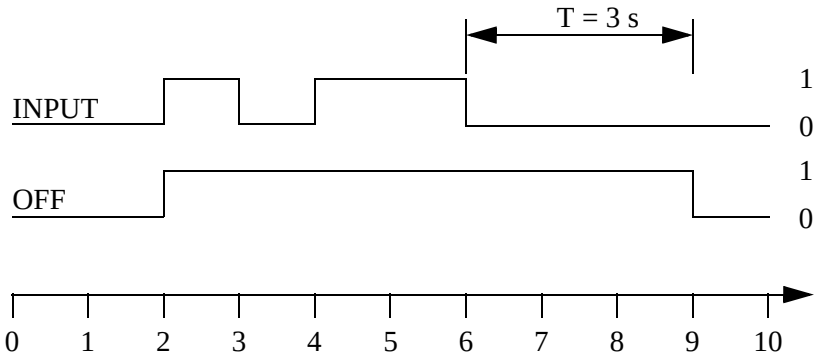

Fig. 14 Example of time diagram for a timer delayed on drop-out with preset time T = 3 s

The input variable to INPUT is obtained delayed a settable time T at output ON when the input variable changes from 0 to 1 in accordance with the time pulse diagram, Fig. 15. The output ON signal returns immediately when the input variable changes from 1 to 0.

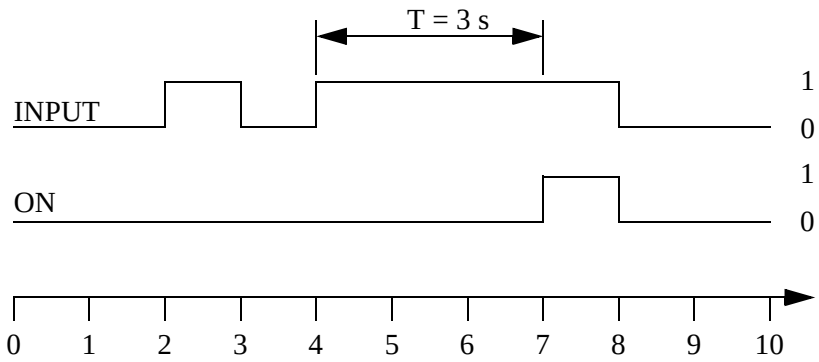

Fig. 15 Example of time diagram for a timer delayed on pick-up with preset time T = 3 s

If you need more timers than available in the terminals, you can use pulse timers with AND or OR logics. Fig. 16 shows an application example of how to realize a timer delayed on drop-out. Fig. 17 shows the realization of a timer delayed on pick-up. Note that the resolution of the setting time corresponds to the execution cycle of the logic as described in section “Configuration” on page 37.

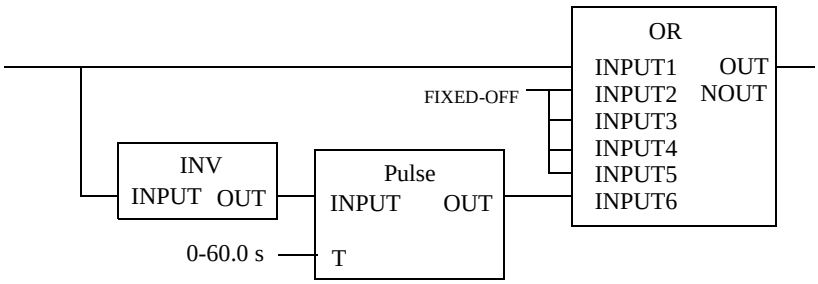

Fig. 16 Realization example of a timer delayed on drop-out

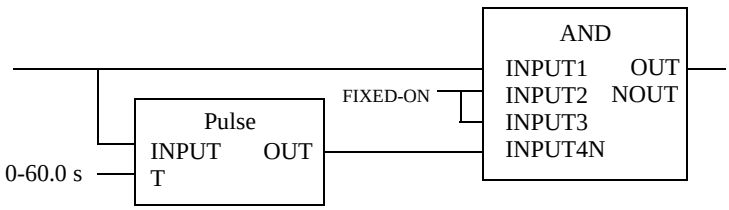

Fig. 17 Realization example of a timer delayed on pick-up

10.2.5 Pulse

The pulse function can be used, for example, for pulse extensions or limiting of operation of outputs.

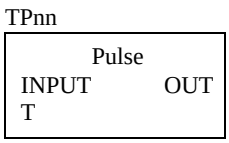

A memory is set when the input INPUT is set to 1. The output OUT then goes to 1. When the time set T has elapsed, the memory is cleared and the output OUT goes to 0. If a new pulse is obtained at the input INPUT before the time set T has elapsed, it does not affect the timer. Only when the time set has elapsed and the output OUT is set to 0, the pulse function can be restarted by the input INPUT going from 0 to 1. See time pulse diagram, Fig. 18.

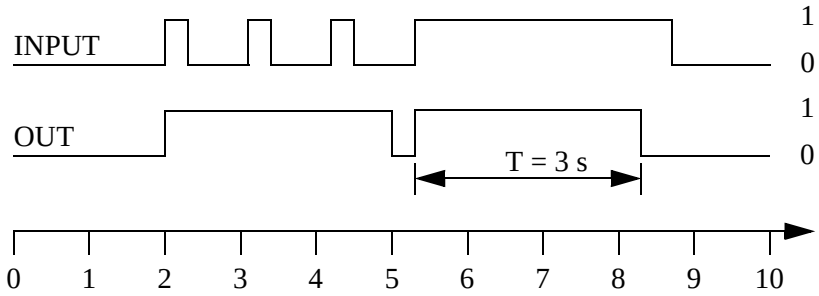

Fig. 18 Example of time diagram for the pulse function with preset pulse length T = 3 s

10.2.6 Set-Reset with/without memory (SM)

The function block Set-Reset (SM) with/without memory has three inputs, designated SMnn-SET, SMnn-RESET and SMnn-MemON, where nn presents the serial number of the block. Each SM circuit has two outputs, SMnn-OUT and SMnn-NOUT (inverted). The output (OUT) is set to 1 if the input (SET) is set to 1 and if the (RESET) is 0. If the reset input is set to 1, the output is unconditionally reset to 0. The memory input controls if the flip-flop after a power interruption or after a setting change in the terminal will return to the state it had before the power interruption or the setting change occurred.

An example of use can be if an information signal to the terminal logic is pulsed as can be the case, when a signal comes from microSCADA and a multiple command block. If the signal is describing a steady state condition, it will not be sent again via microSCADA if a setting change is made in the RET terminal and the information will then be lost unless it is maintained via an SM gate with MemOn set to 1.

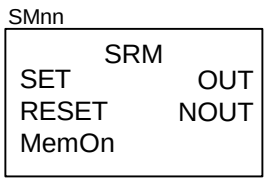

en01000243.vsd

10.2.7 MOVE

The MOVE function blocks (may also be called copy-blocks) are used for synchronization of boolean signals sent between logics running with different execution cycle times.

There are two types of MOVE function blocks - MOF located ***F***irst in the slower logic and MOL located ***L***ast in the slower logic. The MOF function blocks are used for signals coming into the slower logic and the MOL function blocks are used for signals going out from the slower logic.

In the RET 521 terminal, the logic is running with three different execution cycle times, maximum, medium and low speed. There are two MOVE blocks (one MOF and one MOL) available for the medium speed and four MOVE blocks (two MOF and two MOL) for the low speed.

Each MOVE block of 16 signals is protected from being interrupted by other logic application tasks. This guarantees the consistency of the signals to each other within each MOF and MOL function block.

Synchronization of signals with MOF should be used when a signal which is produced outside the slower logic is used in several places in the logic and there might be a malfunction if the signal changes its value between these places.

Synchronization with MOL should be used if a signal produced in the slower logic is used in several places outside this logic, or if several signals produced in the slower logic are used together outside this logic, and there is a similar need for synchronisation.

Fig. 19 shows an example of logic, which can result in malfunctions on the output signal from the AND gate to the right in the figure.

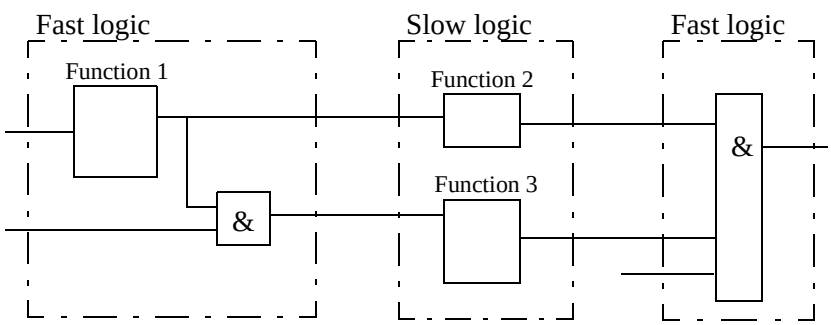

Fig. 19 Example of logic, which can result in malfunctions

Fig. 20 shows the same logic as in Fig. 19, but with the signals synchronized by the MOVE function blocks MOFn and MOLn. With this solution the consistency of the signals can be guaranteed.

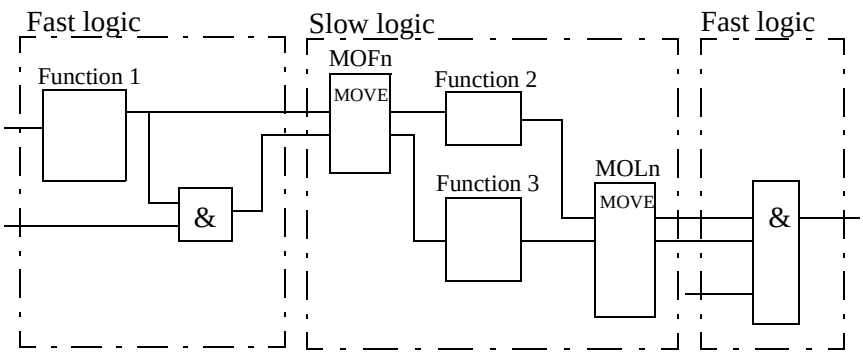

Fig. 20 Example of logic with synchronized signals

10.3 Setting

The time delays and pulse lenghts for Timer and Pulse function blocks are set from the CAP 531 configuration tool. CAP 531 is included in the CAP 540 configuration and setting tool.

Both timers in the same logic block (the one delayed on pick-up and the one delayed on drop-out) always have a common setting value.

Setting values of the pulse length are independent on one another for all pulse circuits.

10.4 Configuration

The configuration of the logics is performed from the CAP 531.

Execution of functions as defined by the configurable logic blocks in RET 521 runs in a fixed sequence in three different execution cycle times with maximum speed, mediate speed and low speed.

For each cycle time, the function block is given an execution serial number. This is shown when using the CAP 531 configuration tool with the designation of the function block and the cycle time, for example, TMnn-(1044, 20). TMnn is the designation of the function block, 1044 is the execution serial number and 20 is the cycle time.

Execution of different function blocks within the same cycle time should follow the same order as their execution serial numbers to get an optimal solution. Always remember this when connecting in series two or more logical function blocks. When you connect function blocks with different cycle times, see the use of MOVE function blocks in the section “MOVE” on page 36.

So design the logic circuits carefully and check always the execution sequence for different functions. In the opposite cases, additional time delays must be introduced into the logic schemes to prevent errors, for example, race between functions.

11 Command function (CM/CD)

11.1 General

The protection and control terminals may be provided with output functions that can be controlled either from a Substation Automation system or from the built-in HMI. The output functions can be used, for example, to control high-voltage apparatuses in switchyards. For local control functions, the built-in HMI can be used. Together with the configuration logic circuits, the user can govern pulses or steady output signals for control purposes within the terminal or via binary outputs. In the REx 5xx terminals it is also possible to receive data from other terminals via the LON bus.

Two types of command function blocks are available, Single Command and Multiple Command.

11.2 Single Command function

The outputs from the Single Command function block can be individually controlled from the operator station, remote-control gateway, or from the built-in HMI. Each output signal can be given a user-defined name.

The output signals are available for configuration to built-in functions or via the configuration logic circuits to the binary outputs of the terminal.

The command functions can be connected according to the application examples in Fig. 21 to Fig. 23. Note that the execution cyclicity of the configured logic connected to the command function block cannot have a cycle time longer than the command function block.

Fig. 21 shows an example of how the user can, in an easy way, connect the command function via the configuration logic circuit to control a high-voltage apparatus. This type of command function is normally performed by a pulse via the binary outputs of the terminal. Fig. 21 shows a close operation, but an open operation is performed in a corresponding way without the synchro-check condition.

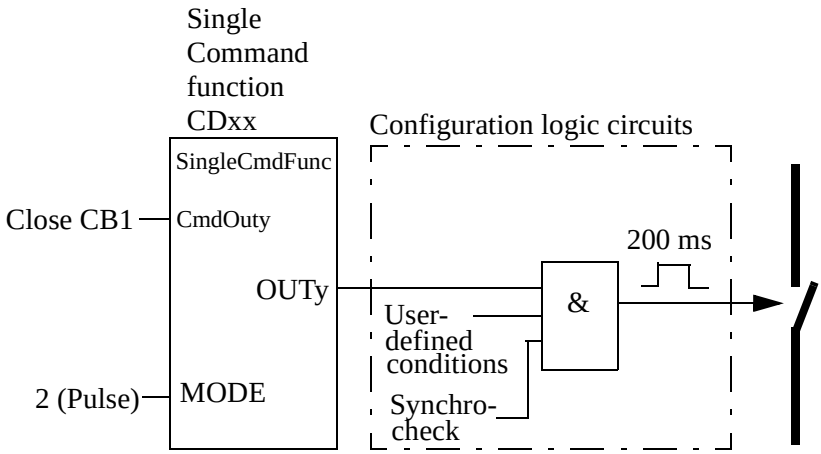

Fig. 21 Application example showing a logic diagram for control of a circuit breaker via configuration logic circuits

Fig. 22 and Fig. 23 show other ways to control functions, which require steady signals On and Off. The output can be used to control built-in functions or external equipment.

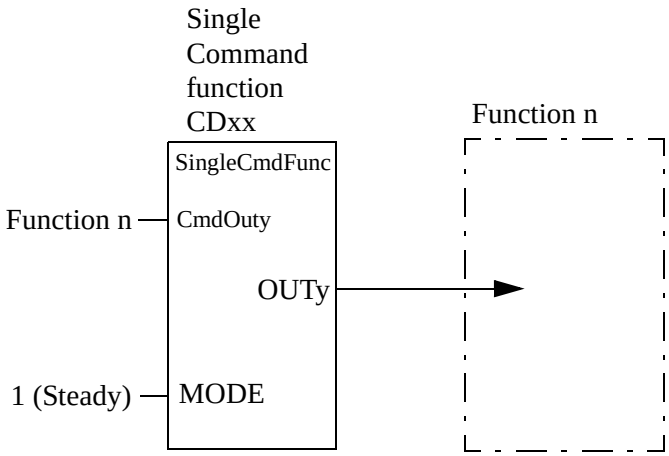

Fig. 22 Application example showing a logic diagram for control of built-in functions

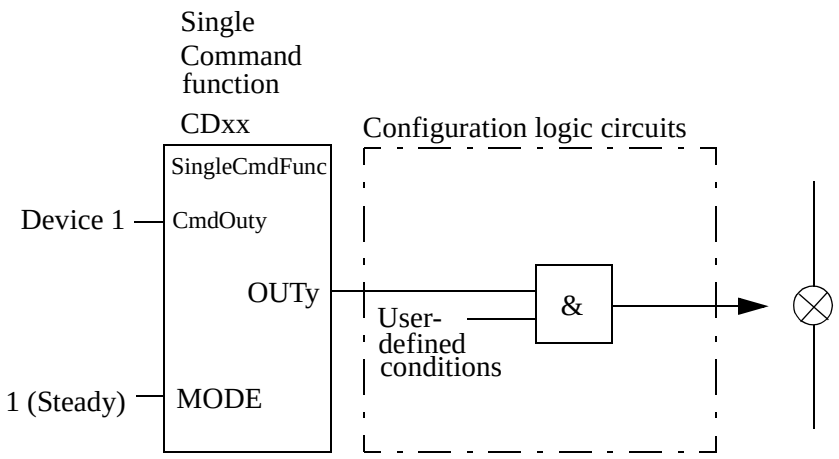

Fig. 23 Application example showing a logic diagram for control of external equipment via configuration logic circuits

11.3 Multiple Command function

The Multiple Command function block has 16 outputs combined in one block, which can be controlled from the operator station, that is, the whole block is sent at the same time from the operator station. One common user-defined name can be given for the whole block.

The output signals are available for configuration to built-in functions or via the configuration logic circuits to the binary outputs of the terminal.

11.4 Communication between terminals

The Multiple Command function block can also be used to receive information over the LON bus from other terminals. The most common use is to transfer interlocking information between different bays. That can be performed by an Event function block as the send block and with a Multiple Command function block as the receive block. The configuration for the communication between terminals is made by the LON Network Tool.

11.5 Commands from built-in HMI

The outputs of the Single Command function block can be activated from the built-in HMI. This can be performed under the menu:

Command

CDxx

Fig. 24 shows the dialogue box for the built-in HMI after the selection of the command menu above. The display shows the name of the output to control (CmdOut1) and the present status (Old) and proposes a new value (New).

```
CD 01 - CmdOut 1
Old:1 New: 0 ^

YES NO
```

Fig. 24 Command dialogue to control an output from the Single Command function block

The dialogue to operate an output from the Single Command function block is performed from different states as follows:

1 Selection active; select the:
   - C button, and then the No box activates.
   - Up arrow, and then New: 0 changes to New: 1. The up arrow changes to the down arrow.
   - E button, and then the Yes box activates.

2 Yes box active; select the:
   - C button to cancel the action and return to the CMD/CDxx menu window.
   - E button to confirm the action and return to the CMD/CDxx menu window.
   - Right arrow to activate the No box.

3 No box active; select the:
   - C button to cancel the action and return to the CMD/CDxx menu window.
   - E button to confirm the action and return to the CMD/CDxx menu window.
   - Left arrow to activate the Yes box.

11.6 Setting

The setting parameters for the Single Command function and Multiple Command function are set from the CAP 531 configuration tool.

Parameters to be set for the Single Command function are MODE, common for the whole block, and CmdOuty - including the name for each output signal. The MODE input sets the outputs to be one of the types Off(0) , Steady(1), or Pulse(2).

The Multiple Command function has a common name setting (CmdOut) for the block, MODE as above and INTERVAL used for the supervision of the cyclical receiving of data.

12 Frequency measurement function (FRME)

12.1 General

The majority of protection and control functions in RET 521 are based on the fundamental frequency component of the analog input signals. Since the unwanted harmonic components are generally present in the analog input signal, a Discrete Fourier Filter (DFF) is implemented in order to extract the fundamental component out of it. As implemented in RET 521 the DFF has a “full cycle” window with a window length which is normally 20 samples per cycle, and it is pre-designed for nominal power system frequency (i.e. 50 Hz or 60 Hz). As a result of DFF calculation the magnitude and phase angle of the fundamental component phasor of the analog input quantity are obtained.

A DFF has excellent filter properties when the frequency of the fundamental component of the analogue input signal corresponds to the DFF window length. But when the frequency of the fundamental component of the input signal deviates from the DFF window length an additional error is introduced. This error can be tolerated for small frequency deviation of the analogue input signal (i.e. ±2Hz), but for larger deviations of frequency this error can not be tolerated. It is therefore necessary to account for this error in applications where the frequency of the analog input signal can vary considerably (i.e. generator step-up transformers, or network transformers close to the large generating plants). The DFF in RET 521 is adaptive if FRME function is implemented. Such a filter retains its good properties in a much wider frequency range.

In RET 521 a specially designed algorithm for frequency measurement is implemented. The algorithm is located within the FRME function block. This algorithm enables all other protection and control functions within the RET 521 to be utilized within the extended frequency range from 0,7 to 1,2 of nominal power system frequency (i.e. 50 Hz or 60 Hz). OVEX function uses FRME measured frequency directly as an input.

In order to track the power system fundamental frequency the FRME function shall be configured to process a voltage signal. Use one of the following two types of voltage input signals:

- Three phase-to-ground voltages (the measurement of frequency is based on positive sequence phasor which is internally calculated).
- One phase-to-phase voltage (the frequency measurement is based on that phase-to-phase voltage phasor).

The connection with three phase-to-earth voltages is the best choice and should be used whenever it is available. It gives the best performance on the frequency measurement with only a few mHz unaccuracy over the whole range. The phase to phase connection is the second best choice but with an unaccuracy in the range of ±50 mHz instead, over the whole range. A single phase-to-ground voltage can be used as well, but this is not recommended.

Voltage input from any of the power transformer windings can be used for this measurement.

The choice of a suitable FRME function can be done by the CAP 531 configuration tool.

12.2 Settings

The FRME function has only one setting parameter “Operation” which is used to set this function ON or OFF.

13 Transformer differential protection (DIFP)

Differential protection is one of the most important and the most commonly used protection for transformers of approximately 10 MVA and above. The differential protection simplicity of comparing current into all terminals of the transformer gives it a very high reliability. The differential protection does an excellent job of meeting a large number of the protection requirements but must be combined with other protections to provide full transformer protection.

RET 521 has two variants of transformer differential protections intended for two-winding and three-winding transformers. Up-to five restrained three-phase current inputs are available for three-winding applications.

13.1 General

The transformer differential protection is a unit protection. It serves as the main protection of transformers in case of faults in the windings. The protective zone of a differential protection includes the transformer itself, the bus-work or cables between the current transformer and the power transformer.

When bushing current transformers are used for the differential relay, the protective zone does not include the bus-work or cables between the circuit breaker and the power transformer. In some substations there is a current differential protection for the busbar. Such a busbar protection will include the bus-work or cables between the circuit breaker and the power transformer.

Electrical internal faults are very serious and cause immediate serious damage. Short-circuits and earth-faults on windings and terminals are generally detectable by the differential protection. Interturn fault, which is flashover between conductors within the same physical winding, is also possible to detect if enough number of turns are short-circuited. Interturn faults are the most difficult transformer winding faults to detect with electrical protections.

A small interturn fault including just a few turns will result in an undetectable amount of current until it has develop into an earth-fault. For this reason it is important that the differential protection has a high sensitivity and that it is possible to use a sensitive setting without causing unwanted operations for external faults.

It is important that the faulted transformer should be disconnected as fast as possible. As the differential protection is a unit protection it can be designed for fast tripping, thus providing selective disconnection of the faulty transformer. The differential protection should never operate to faults outside the protective zone.

A transformer differential protection compares the current flowing to the transformer with the current leaving the transformer. Power transformers introduce often not only a change in magnitudes of voltages and currents but also a change in phase angle. These effects must be considered in obtaining the correct analysis of fault conditions by the differential protection.

Traditional transformer differential protection functions required auxiliary transformers for correction of the phase shift and ratio. Numerical microprocessor based differential algorithm as implemented by RET 521 compensate for both the turns-ratio and the phase shift internally in the software. No auxiliary current transformers are necessary. The rated data and vector group for the power transformer and the rated currents of the CTs have to be set from PST or built-in HMI. See the sections “Power transformer data” on page 219 and “Current and voltage transformer data” on page 225 for details.

The differential current should theoretically be zero during normal load or external faults if the turn-ratio and the phase shift are correctly compensated. However, there are several different phenomena other than internal faults that will cause unwanted and false differential currents. The main reasons for unwanted differential currents are:

- mismatch due to different position of the tap changer
- different characteristics, loads and operating conditions of the current transformers
- zero sequence currents that only flow on one side of the power transformer
- normal magnetizing currents
- magnetizing inrush currents
- overexcitation magnetizing currents

The following paragraphs describe how these reasons of unwanted differential currents can be taken into consideration.

13.2 Magnetizing inrush current

The magnetizing inrush is a transient condition which occurs when a power transformer is energized. Similar inrush currents flow when the voltage return to normal after the clearance of shunt faults. The magnetizing current appears as a differential current to the transformer differential protection. It is not a fault condition and the protection must remain stable during the inrush transient, a requirement which is a major factor in the design of differential protection for transformers. With improved modern steels in the manufacture of power transformers, and application of very fast differential relays, magnetizing inrush phenomena came into more prominence.

The shape, magnitude and duration of the inrush current depend on the following characteristic factors:

- the source impedance
- the size of the transformer
- the location of energized winding (inner or outer)
- the connection of the windings
- the point of wave when the breaker closes
- the magnetic properties of the core
- the remanence of the core
- the use of pre-insertion resistors

The inrush current can appear in all three phases and in an earthed neutral. The magnitude of the inrush current to the inner winding is larger than the inrush current to the outer winding. The magnitude of the inrush current is 10-20 times in the first case and 5-10 times the rated current in the second case. Usually, the high-voltage winding is the outer winding and the low-voltage winding is the inner winding. The inrush current decays relatively slowly. The time constant of the transient is relatively long, being from perhaps 0.1 seconds for a 100 kVA transformer and up to 1.0 second for a large unit. The magnetizing current has been observed to be still changing up to 30 minutes after switching on.

The maximum inrush current develops if the switching occurs when the voltage is close to zero and the new flux from the inrush current gets the same direction as the remanent flux. The sum of the two fluxes can exceed the saturation flux. The inrush current will be small when the new flux from the inrush current gets the opposite direction as the remanent flux. The magnitude of the inrush current depends therefore on the point on wave when we close the transformer switch.

The source impedance of the power system and the air-core reactance of the energized winding determine the magnitude of the inrush current when the core saturates. The probability that the maximum inrush current should occur is low. One out of 5-6 times, the switching should generate an inrush current close to the maximum.

When the power system voltage is reestablished after a short circuit has been cleared elsewhere in the power system, the recovery inrush currents will flow which fortunately are lower than initial inrush currents. Still, a differential relay which has been stable during a heavy external fault may misoperate due to recovery inrush when the fault is cleared. To prevent this, the recovery inrush must be recognized as well.

When a second power transformer is energized in parallel with another which was already in operation, the sympathetic inrush currents will flow in the later, which are lower than initial inrush currents. The phenomenon of sympathetic inrush is quite complex. Although inrush current phenomena associated with the energizing of one single power transformer are well understood, there are certain elements of uniqueness encountered when one transformer is suddenly energized in parallel with another which was already in operation.

13.2.1 Inrush restraint methods

The waveform of transformer magnetizing current contains a proportion of harmonics which increases as the peak flux density is raised to the saturating condition. The inrush current is an offset current with a waveform which is not symmetrical about the time axis. The wave typically contains both even and odd harmonics. Typical inrush currents contain substantial amounts of second and third harmonics and diminishing amounts of higher orders. The presence of the bi-directional waveforms substantially increases the proportion of the second harmonic, being up to more than 60% of the fundamental harmonic.

It can also be observed that the inrush wave is distinguished from a fault wave by a period in each cycle during which very low magnetizing currents flow, when the core is not in saturation. This property of the inrush current can be exploited to distinguish inrush condition from an internal fault.

Sensitive differential protections may operate incorrectly when a power transformer is energized. To make a differential protection stable against inrush currents, measures must be taken in order to make the algorithm capable to distinguish the inrush phenomena from a fault. It is necessary to provide some forms of detection of inrush conditions and restrain the differential protection.

Second harmonic restraint is an effective method to avoid unwanted operations when energizing a power transformer, as the second harmonic always is present in the inrush current. The second harmonic content of a differential current is compared to the fundamental harmonic of the same differential current and if the ratio is higher than a set limit, then an inrush condition is assumed.

Normal primary fault currents do not contain second or other even harmonics. The secondary current of a current transformer which is energized into steady state saturation will also contain odd harmonics but not even harmonics. However, should the current transformer be saturated by the transient component of the fault current, the resulting saturation is not symmetrical and even harmonics are introduced into the output current. This can have the disadvantage of increasing the fault clearance time for heavy internal faults with current transformer saturation.

With a combination of the second harmonic restraint and the waveform restraint methods it is possible to get a protection with high security and stability against inrush effects and at the same time maintain high performance in case of heavy internal faults even if the current transformers are saturated.

Both these restraint methods are applied by RET 521. Two possible combinations are available. The default or standard method (conditionally) is to let the harmonic and the waveform methods operate in parallel only when the power transformer is not yet energized, and switch off the second harmonic criterion when the power transformer has been energized. The second harmonic method is also active a short time when heavy external fault has been detected. The second method (always) is to let the second harmonic method be active all the time. The waveform method operates in parallel all the time. The choice of combination of restraint method is done with a setting parameter. Option Conditionally is recommended as the default setting. Option Always can be used to increase the stability if the current transformers are sufficiently large so that the harmonics produced by transient saturation do not delay normal operation of the protection.

The second harmonic restraint function has a settable level. If the ratio of the second harmonic to fundamental harmonic in the differential current is above the settable limit, the operation of the differential protection is restrained. It is recommended to use the setting 15% as a default value in case no special reasons exist to choose an other setting.

13.3 Overexcitation magnetizing current

Overexcitation results from excessive applied voltage, possibly in combination with low frequency, as with generator-transformer units. The risk is greatest for generator-transformers, although overfluxing trouble has been known to occur for other transformers as well.

The overexcitation condition itself usually does not call for high speed tripping of the power transformer, but relatively high magnetizing currents, which are seen as pure differential currents by the differential protection, may cause a false trip of the differential protection.

Both excessive voltage and lower frequency will tend to increase transformer flux density. An overexcited transformer is not a transformer fault. It is an abnormal network condition for which a transformer differential protection should not operate. The differential protection must remain stable during the overexcitation condition.

13.3.1 Overexcitation restraint method

Overexcitation current contains odd harmonics, because the waveform is symmetrical about the time axis. As the third harmonic currents cannot possible flow into a delta winding, the fifth harmonic is the lowest harmonic which can serve as a criterion for overexcitation. The overexcitation on the delta side will produce exciting currents that contain a large fundamental frequency component with little odd harmonics. In this application the fifth harmonic limit must be set to a relatively low value.

RET 521 differential protection function is provided with a fifth harmonic restraint to prevent the protection from operation during an overexcitation condition of a power transformer. If the ratio of the fifth harmonic to fundamental harmonic in the differential current is above a settable limit the operation is restrained. It is recommended to use the setting 25% as a default value in case no special reasons exist to choose an other setting.

Transformers likely to be exposed to overvoltage or underfrequency conditions should be provided with an overexcitation protection based on V/Hz to achieve trip before the internal limit is reached.

13.4 Cross-Blocking between Phases

Basic definition of the cross-blocking is that one of the three phases can block operation (i.e. tripping) of the other two phases due to the properties of the differential current in that phase (i.e. waveform, 2nd or 5th harmonic content).

In DIFP algorithm the user can control the cross-blocking between the phases via the setting parameter “CrossBlock”.

When parameter “CrossBlock” is set to “On”, cross blocking between phases will be introduced. There is not any time settings involved, but the phase with the operating point above the set bias characteristic will be able to cross-block other two phases if it is self-blocked by any of the previously explained restrained criteria. As soon as the operating point for this phase is below the set bias characteristic cross blocking from that phase will be inhibited. In this way cross-blocking of the temporary nature is achieved. In should be noted that this is the default (i.e. recommended) setting value for this parameter.

When parameter “CrossBlock” is set to “Off”, any cross blocking between phases will be disabled. It is recommended to use the value “Off” with caution in order to avoid the unwanted tripping during initial energizing of the power transformer.

13.5 Normal service

During normal service a small differential current flows through the differential protection. The current is due to the excitation current of the power transformer, ratio errors in the current transformers and changes of the position of the tap changer, if provided.

Normal magnetizing currents are of the order of 1% or less which is low in comparison with the operate value of the differential protection and can be neglected.

The power transformer ratio changes as a result of changing the tap of an on-load tap changer. This will cause false differential currents to the differential protection function if not the tap position is known. A tap changer in the end position gives a differential current of 10-20% of load current depending of the regulating range of the tap changer. If the tap position is not known, the actual ratio will only match at one point of the tap changing range. Therefore, the mismatch due to this must be taken care of by setting a lower base sensitivity of the differential protection. A setting of 10-15% higher than the mismatch is usual.

13.5.1 Tap changer position adaption

If the tap position is known and the differential function is supplied with regularly updated information about the tap changer position an adaption to the actual turn ratio can be done. In this case it is possible to set a much higher sensitivity of the differential protection. RET 521 has this feature and it is recommended to set the parameter “Idmin” around 15% - 20% for this applications.

13.6 External faults

For faults outside the protective zone a relatively large differential current can occur due to the position of the tap changer and differences between the current transformers. At maximum through fault current the unwanted differential current produced by a small percentage unbalance may be substantial. There is a risk for current transformer saturation for heavy faults just outside the protective zone. The differential protection should not operate for the differential current in these cases.

13.6.1 Restrained differential protection

To make a differential relay as sensitive and stable as possible, restrained differential protections have been developed and are now adopted as the general practice in the protection of power transformers. The protection should be provided with a proportional bias which makes the protection operate for a certain percentage differential current related to the current through the transformer. This stabilizes the protection under through fault conditions while still permitting the system to have good basic sensitivity.

The bias current can be defined in many different ways. One classical way of defining the bias current has been Ibias = (I1 + I2) / 2, where I1 is the magnitude of the power transformer primary current, and I2 the magnitude of the power transformer secondary current. However, it has been found that if the bias current is defined as the highest power transformer current this will reflect the difficulties met by the current transformers much better.

The differential protection function in RET 521 uses the highest current of all restrain inputs as bias current. The currents measured on all sides are converted in pu values using the power transformer winding rated currents. After that the highest pu value is taken as bias current in pu. For applications were the power transformer rated current and the CT primary rated current can differs considerably, (applications with T-connections), measured currents in the T connections are converted to pu value using the rated primary current of the CT, but one additional “measuring” point is introduced as sum of this two T currents. This summed current is converted to pu value using the power transformer winding rated currents. After that the highest pu value is taken as bias current in pu. In this way best possible combination between sensitivity and security for differential protection function with T connection is obtained.

The main philosophy behind the principle with the operate bias characteristic is to decrease the operate sensitivity when the current transformers have difficult operating conditions. This bias quantity gives the best stability against an unwanted operation of the overall differential protection. Fig. 25 shows the set of 5 operate-bias characteristics that are available in RET 521.

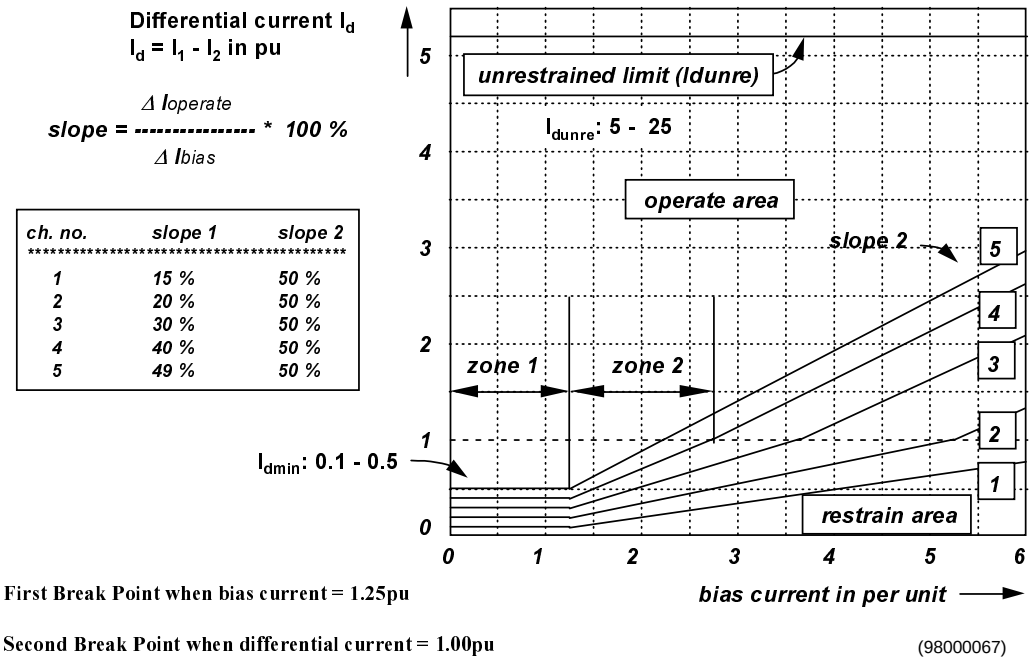

Fig. 25 RET 521 set of operate-bias characteristics

The usual practice for transformer protection is to set the bias characteristic to a value of at least twice the value of the expected spill current under through faults conditions. These criteria can vary considerably from application to application and are often a matter of judgment. The second slope is increased to ensure stability under heavy through fault conditions which could lead to increased differential current due to saturation of current transformers.

Characteristic number 3 and the default sensitivity, ldmin set to 30% of the power transformer rated current can be recommended as a default setting in normal applications. If the conditions are known more in detail, higher or lower sensitivity can be chosen. The selection of suitable characteristic should in such cases be based on the knowledge of the class of the current transformers, availability of information on the on load tap changer (OLTC) position, short circuit power of the systems, etc. If the differential function is supplied with regularly updated information about the OLTC position it is possible to set a higher sensitivity.

Transformers can be connected to buses in such ways that the current transformers used for the differential protection will be either in series with the power transformer windings or the current transformers will be in breakers that are part of the bus, such as a breaker-and-a-half or a ring bus scheme. For current transformers with primaries in series with the power transformer winding, the current transformer primary current for external faults will be limited by the transformer impedance.

When the current transformers are part of the bus scheme, as in the breaker-and-a-half or the ring bus scheme, the current transformer primary current is not limited by the power transformer impedance. High primary currents may be expected. In either case, any deficiency of current output caused by saturation of one current transformer that is not matched by a similar deficiency of another current transformer will cause a false differential current to appear.

Differential protection can overcome this problem if the bias is obtained separately from each set of current transformer circuits. It is therefore important to avoid paralleling of two or more current transformers for connection to a single restraint input. Each current connected to RET 521 is available for biasing the differential protection function.

13.6.2 Elimination of zero sequence currents

A differential protection may operate unwanted due to external earth faults in cases where the zero sequence current can flow only on one side of the power transformer but not on the other side. This is the situation when the zero sequence current cannot be properly transformed to the other side of the power transformer. Power transformer connection groups of Yd or Dy type cannot transform the zero sequence current. If a delta winding of a power transformer is earthed via an earthing transformer inside the zone protected by the differential protection there will be an unwanted differential current in case of an external earth fault. Therefore it is necessary to eliminate the zero sequence current from the delta side. It is possible to do it by setting the DIFP parameter “ZSCSub” (zero-sequence current subtraction) to “On”.

To make the overall differential protection insensitive to external earth faults in these situations the zero sequence currents must be eliminated from the power transformer terminal currents, so that they do not appear as the differential currents. This had once been achieved by means of intermediate current transformers. The elimination of zero sequence current is done numerically in RET 521 and no auxiliary transformers or zero sequence traps are necessary.

It should be noted that this setting will not influence at all the differential current calculation on the side of power transformer where the difference between two individual phase currents are used (i.e. for example on primary side of Yd connected power transformer).

The following table gives the summary of the recommended settings for “ZSCSub” parameter for different power transformer vector groups and type applications:

Table 9: Settings for ZSCSub parameter

Set Power Transformer Vector Group	Setting for ZSCSub Parameter	Typical Application
Yy Yyy	On	Used when unloaded tertiary delta winding exist or when at least one star winding is earthed in the star point.
Yy Yyy	Off	Used for differential protection of single phase transformers and reactors or for three-phase transformers without tertiary delta when all star windings are not earthed.
Yd, Ydd, Yyd, Ydy	On	Used when delta winding is earthed via separate earthing transformer which is located inside of the differential zone.
Yd, Ydd, Yyd, Ydy	Off	Used when there is no earthing transformer on the delta winding which is located inside of the differential zone.
Dy, Dyy, Ddy, Dyd	On	Used when delta winding is earthed via separate earthing transformer which is located inside of the differential zone.
Dy, Dyd, Dyy, Ddy	Off	Used when there is no earthing transformer on the delta winding which is located inside of the differential zone.
Dd, Ddd	On	Used when at least one delta winding is earthed via separate earthing transformer which is located inside of the differential zone.
Dd, Ddd	Off	Used when there is no earthing transformer on any of the delta windings inside of the differential zone or for differential protection of single phase transformers and reactors.

This feature enables the user to use DIFP algorithm in RET 521 for differential protection for some special applications listed below:

- overall differential protection of common and serial winding for autotransformers with included star point currents into the scheme (traditionally high-impedance differential protection has been used for this application)
- differential protection of railway power transformers (i.e. split-single-phase transformers, Scott transformers etc.)
- differential protection for shunt reactors and generators

13.7 Internal faults

For faults inside the protective zone, a current proportional to the fault current occurs in the differential circuits and the transformer differential protection will operate.

The transformer differential protection is often provided with an unrestrained differential function. The unrestrained differential protection offers faster fault clearance for heavy internal faults and it is not blocked for magnetizing inrush or overexcitation magnetizing currents. The purpose of the unrestrained differential protection is also to exclude the risk of excessive restraint resulting from the harmonic distortions of the secondary currents from the current transformers in case of heavy internal faults.

The current setting for the unrestrained function has to be set above the maximum inrush current when the transformer is energized. As the magnitude depends on several factors it is difficult to accurately predict the maximum anticipated level of inrush current. The magnitude is normally within the range 5-20 times the rated current of the power transformer (Ir).

RET 521 differential protection function is provided with an unrestrained differential function, that measures the fundamental harmonic of the differential current. The differential current operate value can be set in the range 5 to 25 times the rated current of the power transformer. The following settings can be recommended

Power transformer connection	**Rated power MVA**	**Recommended setting x Ir when energizing from**	
		High voltage side	**Low voltage side**
	< 10	13	13
Yy	10-100	9	9
Yy	> 100	5	5
Yd	-	9	9
Dy	< 100	9	13
Dy	> 100	5	9

The power transformers are assumed to be step-down transformers with power flow from the high voltage side to the low voltage side.

A setting of 13 x Ir or higher can be required when very large through fault currents may saturate the current transformers and cause a large differential current. This can for example be the case when the bus is included in the protective zone of the differential protection or when a breaker-and-a-half arrangement is used.

14 Three-phase time overcurrent protection (TOC)

14.1 General

A breakdown of the insulation between phase conductors or a phase conductor and earth results in a short-circuit or an earth fault. Such faults can result in large fault currents and may cause severe damage to the windings and the transformer core. Furthermore, a fault with high fault currents may cause a high gas pressure. If the pressure gets too high, it will damage the transformer tank. Depending on the magnitude of the fault current overcurrent protections can be used to clear these faults.

High fault currents may flow through a transformer when an external shunt fault occurs on the network and may produce a relatively intense rate of heating of the transformer. This can result in damage to the transformer. The copper losses increase in proportion to the square of the per unit fault current. If the current is limited only by the reactance of the transformer, the duration of external short-circuits that a transformer can withstand without damage is relatively short. Phase overcurrent protection is an important protection that can be used to clear the transformer before the transformer is damaged.

Transformer failures are seldom transient ones and the magnitude of the fault current depends on:

- the short-circuit capacity of the power networks
- the system earthing of the connected networks
- the leakage reactance of the transformer
- the position of the fault along the winding

A short-circuits between the phases will cause a substantial fault current. The magnitude of the fault current depends mainly on the source impedance and the leakage impedance of the transformer.

An earth fault is a metallic contact or flashover between a winding and an earthed part such as the core or the tank. The actual value of the earth fault current will depend on the way the system is earthed and the position of the fault along the winding. The phase currents can be high enough to be detected by a phase overcurrent protection in case of earth faults in solidly earthed systems. However, in many other situations the individual phase currents may be relatively low and are not possible to be detected by the phase overcurrent protection.

A metallic contact or flashover between conductors within the same physical winding causes an interturn fault. An interturn fault short-circuits a small part of the winding. The current in the short-circuited turns will become very high but the influence on the phase currents of the transformer will be very small. Interturn faults are very difficult to detect by protection equipment using electrical input quantities only, but can be detected by using a Buchholz relay.

The phase overcurrent protection is mainly a protection for phase to phase faults but can sometimes also operate for earth faults. The overcurrent protection has very small possibility to detect interturn faults. This must be remembered when considering the performance of a transformer protection scheme.

Depending on the size of the power transformer, the voltage level and the performance of the overall protection scheme, the phase overcurrent protections for power transformers can have several different purposes.

Small power transformers often have an overcurrent protection as main protection though overcurrent protections have inferior sensitivity and are slower than differential protections.

Many large transformers have an overcurrent protection as back-up protection for internal faults. The overcurrent protection will sometimes serve as main protection for the busbar fed from the power transformer. It will often serve as a back-up protection for the busbar and the outgoing power lines fed from the power transformer.

Generally, overcurrent phase protections provide some additional protection for through fault withstand but do not provide adequate primary protection in many applications.

14.2 Short-circuit protection

The phase overcurrent protection is an inexpensive, rather simple, and reliable scheme for fault detection and is used for some transformer protection applications. Sensitive settings and at the same time fast operations are normally not possible with overcurrent protections. The protection will provide limited protection for internal transformer faults. It suffers from having to be set high for transformer inrush, for coordination for down line protections, and to allow transformer overloads that it is ineffective for low magnitude internal transformer faults. Fast operation is often not possible since the transformer protection should be coordinated with the protection for the feeders connected to the busbar.

It should be observed that the sensitivity of a phase overcurrent protection, applied on one side of a Dy transformer, is changed during unsymmetrical faults on the other side of the transformer. The table shows some examples of how the phase currents will be influenced by the phase shift of transformers.

Transformer connection	**Fault on low-voltage side**	**Low-voltage current**	**High-voltage current in phase**		
			a	**b**	**c**
Dy0	ph-earth	1.0	0.58	0	0.58
Dy Yd	ph-ph	1.0	1.15	0.58	0.58
All types	three ph	1.0	1.0	1.0	1.0

For example only one of the phases on the high-voltage side of a Yd transformer carries full short-circuit current. The two other phases on the high-voltage side carry only 50 percent of the current. The sensitivity of an overcurrent protection that measures the currents in just two phases on the high-voltage side may be only 50 percent of the sensitivity of an overcurrent protection that measures the currents in all three phases on the high-voltage side. An overcurrent protection on the high-voltage side shall therefore be connected to three current transformers, one in each phase, and measure the current in all three phases.

The overcurrent protections should have an inverse-time element whose pickup can be adjusted to somewhat above maximum rated load current including the overload capacities of the transformer, and with sufficient time delay to be selective with the protections of adjacent power system components during external faults. When overcurrent protection is applied to the high voltage side of a transformer with three or more windings, it shall have a set operate value that will permit the transformer to carry its rated load. Locating phase overcurrent protections on the low voltage side of each winding will increase the sensitivity since only the full load rating of an individual winding need to be considered.

The protection functions should also have a fast definite time delayed element whose pickup can be slightly higher than either the maximum short-circuit current for an external fault or the magnetizing inrush current. The main function of such a stage is to obtain fast operations of heavy internal faults. Numerical overcurrent protections provide upgraded performance. The digital filters now remove the DC component and harmonics from the inrush current.The transient overreach of a numerical overcurrent protection function is very small. The protection functions can therefore be set more sensitive than conventional types.

When a transformer is connected to more than one source of short-circuit current, it may be necessary for at least some of the overcurrent protections to be directional to obtain good protection as well as selectivity for external faults. In some applications directional overcurrent protection functions are located on both the high voltage and low voltage sides of the transformer. Both protections are set to see into the transformer. The transient overreach is less than 10 per cent.

Directional functions can also be valuable when transformers, that are connected to only one source of short-circuit current, operate in parallel. Fast, sensitive and directional overcurrent protection functions monitoring the low voltage side, looking into the transformers will achieve selective fault clearance of the transformers.

The terminal is provided with three three-phase time overcurrent protection modules. The function measures the highest fundamental harmonic current of the phases. Each module can be configured to any side of the transformer. It is also possible to configure two or all three modules to the same side of the power transformer or to any feeder. Each overcurrent module has got two stages working independently of each other. The two stages have their own setting ranges for the start of the function. The lowset stage function can be chosen to have either independent time setting or a current depending inverse time characteristics according to IEC Normal Inverse, Very Inverse, Extremely Inverse and Long Time Inverse. The highset stage function can only have independent time delay setting.

Any of the two stages can be directional. The three-phase voltages from the same side of the power transformer have to be connected to the terminal. The directional function is achieved down to 1% of rated voltage. Below this voltage no direction is achieved and the overcurrent protection will work either as a nondirectional function or be blocked depending on the chosen setting for this situation.

The voltage that will be used as the directional reference depends on the actually highest current of the three-phase currents. If the current in phase a is highest, the reference voltage will be the phase-to-phase voltage between phase b and c. The characteristic angle of the relay (RCA) and the relay operate angle (ROA) are settable. The ROA is set symmetrically from the maximum torque angle (MTA). The RCA is set with reference to the reference voltage. The RCA is defined to be negative if MTA leads the reference voltage. Fig. 26 shows an example. The RCA is set to +30 degree leading and ROA is 90 degrees. The MTA direction represents a 60 degrees lagging fault current.

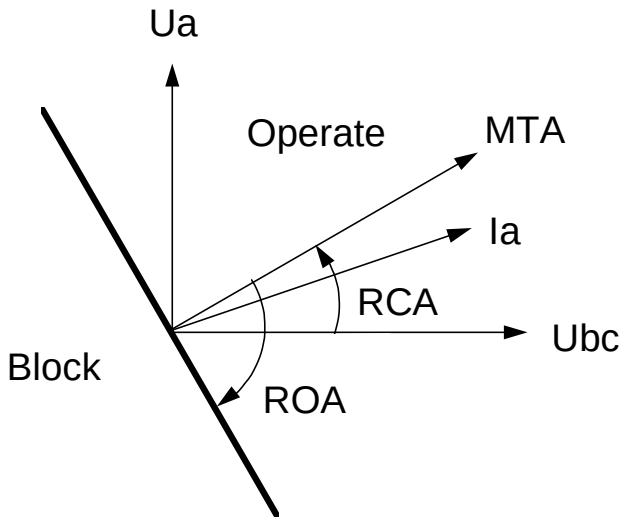

Fig. 26 Forward directional characteristic

The direction can be set to Reverse or Forward. The direction is defined to be Reverse when the protection looks into and operates for faults in the power transformer or for faults on the other side of the transformer. The direction Forward is set if the protection shall operate for faults located in the network on the same side of the transformer.

14.3 Settings

In the CAP531 configuration tool it is possible to chose UserDef side as parameter setting for SIDE2W or SIDE3W. When UserDef is choose then the setting IrUserDef will be used as "rated" current for TOC.

For directional TOC the setting UrUserDef also have to be set. The direction for UserDef side is the same as for the primary side. Observe that for secondary and tertiary side Reverse direction means currents from power transformer and Forward direction means currents to power transformer.

The operating current is normally set in per cent of the rated load current Ir of the power transformer. However, if an overcurrent protection module is configured to another object it is possible to define another base current not related to the power transformer.

The lowset stage must be given a setting so that the highest possible load current does not cause operation. The highest possible load current of the transformer is given of the overload capacity of the transformer. The overload capacity is dependent on for example the ambient temperature and the load cycle of the transformer. Often the overload capacity of a transformer can be up to 1.4 times the rated power. The corresponding settings of the lowset stage are 13% to 170% of the overload capacity of the transformer. This setting includes a safety factor and the reset ratio of the protection. The time setting shall be coordinated with the protections of the outgoing feeders.

A power transformer can carry substantial overload during an hour or two. Many utilities want to utilize this capability temporarily. When two or more transformers are operated in parallel to share a common load, the overcurrent protection settings should consider the short time overload on one transformer upon loss of the other transformer and maybe set the operate value even higher than the recommendation above. In such a case it is recommended that the transformer is provided with a thermal overload protection.

As the overcurrent protection normally shall provide back-up protection functions for outgoing feeders, it should be checked that the overcurrent protection has the possibility to operate at minimum fault current within the back-up protection zone. The back-up function is not always possible to fulfill for example in case of a large transformer and long feeders. In such cases other measures have to be considered.

The highset stage with a short or no time delayed operation must be set so that the protection is selective to other protections in the power system. For an overcurrent protection at the high voltage side, from where the fault current is fed, it is wanted to have fast clearing of as many faults as possible within the transformer. The protection must not operate for a fault on the low voltage side busbar. The highset stage is recommended to be set at about 30% above the maximum fault current on the low voltage side busbar. This setting includes a safety factor and the transient overreach factor of the protection. The setting should also be above the transformer inrush current. This should normally not be any problem to fulfill. However, if problems with inrush should arise there is also a possibility to use the inrush block signals from the differential protection function to block the phase overcurrent function.

With this setting fast tripping is only obtained for severe faults on the feeding side of the transformer. The protection operates delayed for faults on the remaining parts of the winding and for faults on the load side of the transformer if the fault current and the duration exceed the set value of the protection.

The highset stage of an overcurrent protection at the low voltage side must be time delayed to prevent unwanted tripping of the transformer in case of faults on the outgoing feeders. The current set value must be coordinated to the settings for the protections of the outgoing feeders. If the transformer is connected to more than one source of short-circuit current these restrictions are valid also for the highset stage at the high voltage side.

When the directional overcurrent function is used it is recommended to set the characteristic angle of the relay RCA = -45 degrees and the relay operate angle ROA = 75 degrees.

15 Multipurpose General Protection Function (GF)

15.1 General

A breakdown of the insulation between phase conductors or a phase conductor and earth results in a short-circuit or an earth fault. Such faults can result in large fault currents and may cause severe damage to the power system primary equipment. Depending on the magnitude and type of the fault different overcurrent protections, based on measurement of phase, ground or sequence current components, can be used to clear these faults. Additionally it is sometimes required that these overcurrent protections shall be directional and/or voltage controlled/restrained.

The over/under voltage protection is applied on power system elements such as generators, transformers, motors and power lines in order to detect abnormal voltage conditions. Depending on the type of voltage deviation and type of power system abnormal condition different over/under voltage protections based on measurement of phase-to-ground, phase-to-phase, residual or sequence voltage components can be used to detect and operate for such incident.

The RET 521 terminal can be provided with up to twelve multipurpose general function (GF) protection modules. All general function protection modules are executed in RET 521 in the fastest internal execution cycle (i.e. five times in each fundamental power system cycle). The function is always connected to three-phase current and three-phase voltage input in the configuration tool, but it will always measure only the single current and the single voltage quantity selected by the end user in the setting tool (i.e. selected current quantity and selected voltage quantity). Each module can be configured to any side of the power transformer. It is also possible to configure any number of modules to the same side of the power transformer. Each multipurpose general function module has got the following protection elements built into it:

- Two non-directional overcurrent stages working completely independently from each other but measuring the same quantity. The lowset stage can be set to have either definite time delay or a user programmable inverse time delay characteristic. Therefore any inverse curve according to IEC, IEEE or ANSI standard can be obtained. Additionally the inverse time characteristic can have instantaneous or time delayed reset. The highset stage can only have definite time delay. Second harmonic blocking feature is available for both stages, however it is not possible to use this with all possible choices of measured current quantities.

- Current restrained feature is available in order to restrain (i.e. prevent) non-directional overcurrent stages from starting if the measured current quantity is not bigger than the set percentage of the current restrain quantity. This feature can be switched off by a setting parameter.
- Voltage restrained/controlled feature is available in order to modify the pick-up level of the lowset and/or highset non-directional overcurrent stage in proportion to the magnitude of the measured voltage. This feature can be switched off by a setting parameter.
- A directional criterion is available in order to prevent starting of the non-directional overcurrent stage/s if the fault location is not in the set direction (i.e. forward/reverse)
- One overvoltage and one undervoltage stage. Both stages only have definite time delay. These features work completely independently from the overcurrent stages.

All these general protection function features can be individually enabled/disabled. It is as well possible to simultaneously enable more than one feature (even all at the same time).

15.2 Measured Quantities

A multipurpose general function in RET 521 shall be configured to a three-phase current input and a three-phase voltage input. However the general function always measures only one current and one voltage quantity. The user can define these measured quantities by two setting parameters in the setting tool.

The user can select one of the following available current quantities shown in Table 10 for measurement, when three-phase currents are connected to the general function in sequence I_{L1}, I_{L2} & I_{L3}.

Table 10: Current Selection with three-phase currents as inputs

	Set value for parameter “CurrentInput”	Comment
1	L1	GF function will measure the magnitude of the first connected current input (i.e. I_{L1})
2	L2	GF function will measure the magnitude of the second connected current input (i.e. I_{L2})
3	L3	GF function will measure the magnitude of the third connected current input (i.e. I_{L3})

Table 10: Current Selection with three-phase currents as inputs

	Set value for parameter "CurrentInput"	Comment
4	PS	GF function will measure the magnitude of the positive sequence current phasor internally calculated from the three input currents
5	NS	GF function will measure the magnitude of the negative sequence current phasor internally calculated from the three input currents
6	3ZS	GF function will measure the magnitude of the three times the zero sequence current phasor internally calculated from the three input currents (i.e. 3Io)
7	MAX	GF function will measure the magnitude of the current phasor with maximum magnitude from the three input currents
8	MIN	GF function will measure the magnitude of the current phasor with minimum magnitude from the three input currents
9	UNB	GF function will measure unbalance current, which is internally calculated as the algebraic difference between the current input with maximum magnitude and the current input with minimum magnitude from the three input currents
10	L1L2	GF function will measure the magnitude of the current phasor internally calculated as the vectorial difference between the first and the second current inputs (i.e. I_{L1}-I_{L2})
11	L2L3	GF function will measure the magnitude of the current phasor internally calculated as the vectorial difference between the second and the third current inputs (i.e. I_{L2}-I_{L3})
12	L3L1	GF function will measure the magnitude of the current phasor internally calculated as the vectorial difference between the third and the first current inputs (i.e. I_{L3}-I_{L1})
13	MAX2	GF function will measure the magnitude of the current phasor with maximum magnitude among the three difference current phasors calculated (see rows 10, 11, 12)
14	MIN2	GF function will measure the magnitude of the current phasor with minimum magnitude among the three difference current phasors calculated (see rows 10, 11, 12)

The user can select one of the following available voltage quantities shown in Table 11 for measurement, when three phase-to-ground voltages are connected to the general function in sequence U_{L1}, U_{L2} & U_{L3}.

Table 11: Voltage Selection with phase-to-ground voltages as inputs

	Set value for parameter “VoltageInput”	Comment
1	L1	GF function will measure the magnitude of the first connected voltage input (i.e. U_{L1})
2	L2	GF function will measure the magnitude of the second connected voltage input (i.e. U_{L2})
3	L3	GF function will measure the magnitude of the third connected voltage input (i.e. U_{L3})
4	PS	GF function will measure the magnitude of the positive sequence voltage phasor internally calculated from the three input voltages
5	-NS	GF function will measure the magnitude of the negative sequence voltage phasor internally calculated from the three input voltages. This voltage phasor will be intentionally inverted in order to enable easier settings when the directional feature is used.
6	-3ZS	GF function will measure the magnitude of three time the zero sequence voltage phasor internally calculated from the three input voltages. This voltage phasor will be intentionally inverted in order to enable easier settings when the directional feature is used (i.e. -3Uo).
7	MAX	GF function will measure the magnitude of the voltage phasor with maximum magnitude from the three input voltages
8	MIN	GF function will measure the magnitude of the voltage phasor with minimum magnitude from the three input voltages

Table 11: Voltage Selection with phase-to-ground voltages as inputs

	Set value for parameter “VoltageInput”	Comment
9	UNB	GF function will measure unbalance voltage, which is internally calculated as the algebraic difference between the voltage input with maximum magnitude and the voltage input with minimum magnitude from the three input phase voltages
10	L1L2	GF function will measure the magnitude of the voltage phasor internally calculated as the vectorial difference between the first and the second voltage inputs (i.e. U_{L1}-U_{L2})
11	L2L3	GF function will measure the magnitude of the voltage phasor internally calculated as the vectorial difference between the second and the third voltage inputs (i.e. U_{L2}-U_{L3})
12	L3L1	GF function will measure the magnitude of the voltage phasor internally calculated as the vectorial difference between the third and the first voltage inputs (i.e. U_{L3}-U_{L1})
13	MAX2	GF function will measure the magnitude of the voltage phasor with maximum magnitude among the three differences voltages calculated (see rows 10, 11, 12)
14	MIN2	GF function will measure the magnitude of the voltage phasor with minimum magnitude among the three difference voltages calculated (see rows 10, 11, 12)

The user can select one of the following available voltage quantities shown in Table 12 for measurement , when three phase-to-phase voltages are connected to the general function in sequence U_{L1L2}, U_{L2L3} & U_{L3L1}.

.

Table 12: Voltage Selection with phase-to-phase voltages as inputs

	Set value for parameter "VoltageInput"	**Comment**
1	L1	GF function will measure the magnitude of the first connected voltage input (i.e. U_{L1L2})
2	L2	GF function will measure the magnitude of the second connected voltage input (i.e. U_{L2L3})
3	L3	GF function will measure the magnitude of the third connected voltage input (i.e. U_{L3L1})
4	PS	GF function will measure the magnitude of the positive sequence voltage phasor internally calculated from the three input voltages
5	-NS	GF function will measure the magnitude of the negative sequence voltage phasor internally calculated from the three input voltages. This voltage phasor will be intentionally inverted in order to enable easier settings when the directional feature is used.
6	-3ZS	GF function will measure the magnitude of three times the zero sequence voltage phasor internally calculated from the three input voltages (i.e. -3Uo). This voltage phasor will be intentionally inverted in order to enable easier settings when the directional feature is used. **However, with this type of voltage inputs this calculation shall always be zero and therefore it is NOT recommended to use this setting when phase-to-phase voltages are connected to the general function**
7	MAX	GF function will measure the magnitude of the voltage phasor with maximum magnitude from the three input phase-to-phase voltages
8	MIN	GF function will measure the magnitude of the voltage phasor with minimum magnitude from the three input phase-to-phase voltages
9	UNB	GF function will measure unbalance voltage, which is internally calculated as the algebraic difference between the voltage input with maximum magnitude and the voltage input with minimum magnitude from the three input phase-to-phase voltages

Table 12: Voltage Selection with phase-to-phase voltages as inputs

	Set value for parameter “VoltageInput”	Comment
10	L1L2	GF function will measure the magnitude of the voltage phasor internally calculated as the vectorial difference between the first and the second voltage inputs (i.e. U_{L1L2}-U_{L2L3})
11	L2L3	GF function will measure the magnitude of the voltage phasor internally calculated as the vectorial difference between the second and the third voltage inputs (i.e. U_{L2L3}-U_{L3L1})
12	L3L1	GF function will measure the magnitude of the voltage phasor internally calculated as the vectorial difference between the third and the first voltage inputs (i.e. U_{L3L1}-U_{L1L2})
13	MAX2	GF function will measure the magnitude of the voltage phasor with maximum magnitude among the three difference voltages calculated (see rows 10, 11, 12)
14	MIN2	GF function will measure the magnitude of the voltage phasor with minimum magnitude among the three difference voltages calculated (see rows 10, 11, 12)

15.3 Current and Voltage Base Values for GF Function

All current and voltage pickup values for GF functions are entered in percents of the base values. Current and voltage base values are defined, for each GF function, by the setting applied to the parameter “SIDE” which is located on the GF function block in the configuration tool (see next figure).

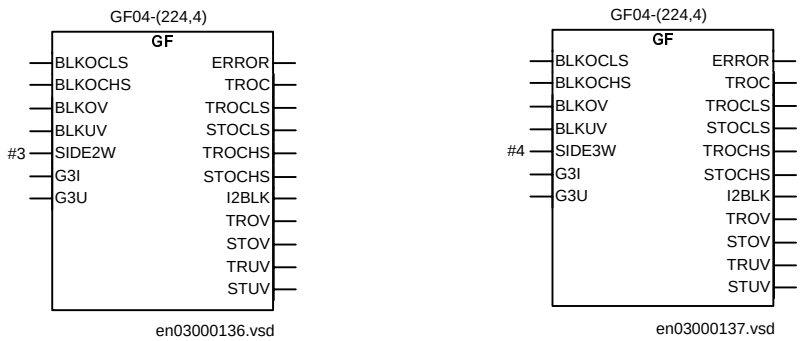

Fig. 27 GF04 function for 2-winding (left) and 3-winding (right) terminal transformer protection

The following table defines the possible values of the “SIDE” parameter in case of two-winding terminals:

Table 13: Base Values for 2-winding RET 521 terminal

Value for “SIDE2W”	Base Value Definition
1	Base_Current=Ir1 (rated phase current of the first winding, entered in the setting tool under “Power Transformer Rated Data”) Base_Voltage=Ur1 (rated phase-to-phase voltage of the first winding, entered in the setting tool under “Power Transformer Rated Data”)
2	Base_Current=Ir2 (rated phase current of the second winding, entered in the setting tool under “Power Transformer Rated Data”) Base_Voltage=Ur2 (rated phase-to-phase voltage of the second winding, entered in the setting tool under “Power Transformer Rated Data”)
3	Base_Current=IrUserDef (User can define the base value independently from any winding rated data. This value is entered in the setting tool under “GFxx/”SelectAnalogue”) Base_Voltage=UrUserDef (User can define the base value independently from any winding rated data. This value is entered in the setting tool under “GFxx/”SelectAnalogue”. Either phase-to-phase or phase-to-ground voltage value can be given as a base value.)

The following table defines the possible values of the “SIDE” parameter in case of three-winding terminals:

Table 14: Base Values for 3-winding RET 521 terminal

Value for “SIDE3W”	Base Value Definition
1	Base_Current=Ir1 (rated phase current of the first winding, entered in the setting tool under “Power Transformer Rated Data”) Base_Voltage=Ur1 (rated phase-to-phase voltage of the first winding, entered in the setting tool under “Power Transformer Rated Data”)
2	Base_Current=Ir2 (rated phase current of the second winding, entered in the setting tool under “Power Transformer Rated Data”) Base_Voltage=Ur2 (rated phase-to-phase voltage of the second winding, entered in the setting tool under “Power Transformer Rated Data”)

Table 14: Base Values for 3-winding RET 521 terminal

Value for “SIDE3W”	Base Value Definition
3	Base_Current=Ir3 (rated phase current of the third winding, entered in the setting tool under “Power Transformer Rated Data”) Base_Voltage=Ur3 (rated phase-to-phase voltage of the third winding, entered in the setting tool under “Power Transformer Rated Data”)
4	Base_Current=IrUserDef (User can define the base value independently from any winding rated data. This value is entered in the setting tool under “GFxx/”SelectAnalogue”) Base_Voltage=UrUserDef (User can define the base value independently from any winding rated data. This value is entered in the setting tool under “GFxx/”SelectAnalogue”. Either phase-to-phase or phase-to-ground voltage value can be given as a base value.)

Please note the following:

- Current base value is always entered in primary amperes
- Voltage base value is always entered in primary kV
- If the base values are associated to a transformer winding, setting parameters “IrUserDef” & “UrUserDef” for this GF function have no effect on function operation
- When the base values are associated to a transformer winding, the base value for the voltage is always phase-to-phase voltage

15.4 Non-directional Overcurrent Feature

Two non-directional overcurrent stages are always available in each GF function. These two stages are called LowSet and HighSet in further text. The two stages have independently settable current pickup level. The LowSet stage can have definite time delay or inverse time delay. The HighSet stage can have only definite time delay. The inverse time delay for LowSet is done by using a general formula. By doing so it is possible to use any type of inverse time delay with GF functions (i.e. IEC, IEEE, ANSI, I^2t etc.). The general formula for the LowSet inverse time delay operating time has the following form:

$$t_{op} \equiv k \times \left[\frac{A}{\left(\frac{I_{Measured}}{I_{pickup}} \right)^P - C} + B \right]$$

where:

t_{op} is operating time of the LowSet stage when inverse operating time is selected

k is the time multiplier (parameter settings)

A, B, C & P are specific constants for any type of curve (parameter settings)

$I_{Measured}$ is the selected current to be measured by the GF function (see section 15.2 Measured Quantities)

I_{pickup} is the set current pickup value for the LowSet stage

The pickup current value for the LowSet stage is defined by the following formula:

$$I_{pickup} = \frac{IsetLow}{100} \times I_{Base}$$

where:

IsetLow is the pickup setting in percent for the LowSet stage

I_{Base} is the base current used by the GF function (see section 15.3 Base Values)

Please note that the above equation is more complicated if the “Voltage Restrained/ Controlled” feature of the GF function is enabled. Please refer to section 15.6 Voltage Controll/Restraint to see how the pickup value is calculated in that case.

Therefore in order to get the desired inverse curve type the end user has to set appropriate values for the curve constants A, B, C & P. Values for these constants for the standard IEC/IEEE curve types can be found in the following table:

Table 15: A, B C & P Constant Values for the Standard Curves

Curve Type	A	B	C	P
IEC/Normal Inverse	0.14	0.0	1.0	0.02
IEC/Very Inverse	13.5	0.0	1.0	1.0
IEC/Extremely Inverse	80.0	0.0	1.0	2.0
IEC/Long Time Inverse	120.0	0.0	1.0	1.0
IEC/Short Inverse	0.05	0.0	1.0	0.04

Table 15: A, B C & P Constant Values for the Standard Curves

Curve Type	A	B	C	P
IEEE/Very Inverse	19.61	0.491	1.0	2.0
IEEE/Moderately Inverse	0.0515	0.1140	1.0	0.02
ANSI/Inverse	0.0086	0.0185	1.0	0.02
ANSI/Very Inverse	2.855	0.0712	1.0	2.0
ANSI/Extremely Inverse	6.407	0.025	1.0	2.0
ANSI/Short Time Inverse	0.0017	0.0037	1.0	0.02
ANSI/Short Time Extremely Inverse	1.281	0.005	1.0	2.0
ANSI/Long Time Inverse	0.086	0.185	1.0	0.02
ANSI/Long Time Very Inverse	28.55	0.712	1.0	2.0
ANSI/Long Time Extremely Inverse	64.07	0.250	1.0	2.0

Please note that the setting for the time multiplier k shall be done in the usual way. However the user shall observe that k typically has values in the following ranges:

- from 0.05 to 1.10 for IEC curves
- from 1 to 10 for IEEE curves
- for ANSI curves k shall be calculated in accordance with the following formula

$$k = \frac{14 \cdot n - 5}{9}$$

where n can have values in the range from 1.0 to 10.0 in steps of 0.1.

Therefore with the GF function it is possible to obtain almost any type of inverse curve. It should as well be noted that it is possible to use all these inverse curves with any measured input current (i.e. maximum phase current, minimum phase current, unbalance current, positive sequence current, negative sequence current, etc.). The end user can also apply user-specific inverse curves by entering the appropriate setting values for the A, B, C & P constants.

RET 521 calculates the operating time for the entered inverse curve by an integration technique. This insures proper operation for changing magnitude of the input current. For more information about this feature please refer to the Technical Reference Manual.

When the inverse time setting is used it is also possible to change from instantaneous reset time to a user settable exponential reset time. This means that the GF function will not reset the accumulated integration register instantaneously when the start condition disappears, but will instead reset the accumulated integration value exponentially according to the value of the setting parameter “tReset” which actually represents the exponential function time constant. Formula used is

$$e^{-\frac{t}{\text{tReset}}}$$

This will ensure secure operation of the GF function in case of intermittent faults and easier time coordination with existing downstream electromechanical overcurrent relays. Please note that this exponential reset feature is only available for the inverse time characteristics and not for the definite time delay characteristics.

Both non-directional overcurrent protection stages can be individually restrained by a second harmonic component in the input current. However it shall be noted that this feature is not applicable when one of the following three measured currents is selected:

- positive sequence current
- negative sequence current
- unbalance current

The inverse curve in the LowSet stage of the GF function can be used, with appropriate settings for the A, B, C & P constants, as I^2t type of curve as well. In the following examples use of the LowSet inverse characteristic for two such applications will be explained:

Example #1 / Question: Can the GF function be used as negative sequence inverse overcurrent protection for a generator with capability constant of 20s, and minimum operating current of 7%?

Example #1 / Answer: Yes it can.
The capability curve for a generator negative sequence overcurrent protection, often used world-wide, is defined by the ANSI standard in accordance with the following formula:

$$t_{op} = \frac{k}{\left(\frac{I_{NS}}{I_{Rated}}\right)^2}$$

where:

t_{op} is the operating time of the negative sequence overcurrent relay

k is the generator capability constant

I_{NS} is the measured negative sequence current

I_{Rated} is the generator rated current

This formula is applicable only when negative sequence current exceed a pre-set value (typically in the range from 6% to 35% of generator rated current).

The above formula can be re-written in the following way without changing the value for the operate time of the negative sequence inverse overcurrent relay:

$$t_{op} = \frac{k \cdot \frac{1}{x^2}}{\left(\frac{I_{NS}}{x \times I_{Rated}}\right)^2}$$

where:

x is the per unit value of the desired pickup for the negative sequence overcurrent relay.

When the above equation is compared with the general equation for the inverse time characteristic of the GF LowSet stage it is obvious that if the following rules are followed:

- set k equal to the generator negative sequence capability value
- set A constant equal to the value $1/x^2$
- set B = 0.0, C=0.0 and P=2.0
- set IsetLow equal to the value x

then the GF LowSet stage can be used for generator negative sequence inverse overcurrent protection.

For this particular example the following shall be done to insure proper function operation:

- select negative sequence current as measuring quantity for this GF function
- make sure that the base current value for the GF function is equal to the generator rated current
- set k = 20
- set A = $1/0.07^2$ = 204.0816
- set B = 0.0, C = 0.0 and P = 2.0
- set IsetLow = 7%
- set tReset = k = 20s (to insure proper operation of the negative sequence overcurrent relay in case of repeated negative sequence overcurrent conditions)
- set minimum operating time tMin = k/2 =10s (just to prevent this function from operating too quickly in case of a nearby heavy external fault)

Proper timing of a function made in this way can easily be verified by secondary injection.

Example #2 / Question: Can the GF function be used as generator stator overload protection in accordance with IEC or ANSI standard and minimum operating current of 116%?

Example #2 / Answer: Yes it can.
The generator stator overload protection is defined by IEC or ANSI standard in accordance with the following formula:

$$t_{op} = \frac{k}{\left(\frac{I_{PS}}{I_{Rated}}\right)^2 - 1}$$

where:

t_{op} is the operating time of the generator stator overload relay

k is the generator capability constant in accordance with the relevant standard

I_{PS} is the measured positive sequence current

I_{Rated} is the generator rated current

This formula is applicable only when positive sequence current exceeds a pre-set value (typically in the range from 105 to 125% of the generator rated current).

The above formula can be re-written in the following way without changing the value for the operate time of the generator stator overload relay:

$$t_{op} = \frac{k \cdot \frac{1}{x^2}}{\left(\frac{I_{PS}}{x \times I_{Rated}}\right)^2 - \frac{1}{x^2}}$$

where:

x is the per unit value for the desired pickup value of the overload relay

When the above equation is compared with the general equation for the inverse time characteristic of the GF LowSet stage it is obvious that if the following rules are followed:

- set k equal to the IEC or ANSI standard generator capability value
- set A constant equal to the value $1/x^2$
- set B = 0.0
- set C constant equal to the value $1/x^2$
- Set P = 2.0
- set IsetLow equal to the value x

then the GF LowSet stage can be used for generator stator overload protection.

For this particular example the following shall be done to insure proper operation:

- select positive sequence current as measured quantity for this GF function
- make sure that the base current value for the GF function is equal to the generator rated current
- set k = 37.5 for the IEC standard or k = 41.4 for the ANSI standard
- set A = C = $1/1.16^2$ = 0.7432
- set B = 0.0
- set P = 2.0

- set IsetLow = 116%
- set tReset = 50s (to insure proper operation of the overload relay in case of repeated overload condition)
- set tMin = 20s (just to prevent this function from operating too quickly in case of a nearby heavy external fault)

Proper timing of a function made in this way can easily be verified by secondary injection.

15.5 Current Restraint Feature

The start of the (non-directional) LowSet and HighSet overcurrent stages can be made dependent on a measured value of a restraint current. This feature will not effect the pickup value of the (non-directional) overcurrent stage, but will instead pose an additional criterion for its starting. Neither the LowSet or the HighSet overcurrent stage will be able to start unless the magnitude of the measured current is bigger than the pre-set percentage of the restraining current magnitude. This feature can be switched on or off by a parameter setting. The current restraint characteristic is shown in the following figure:

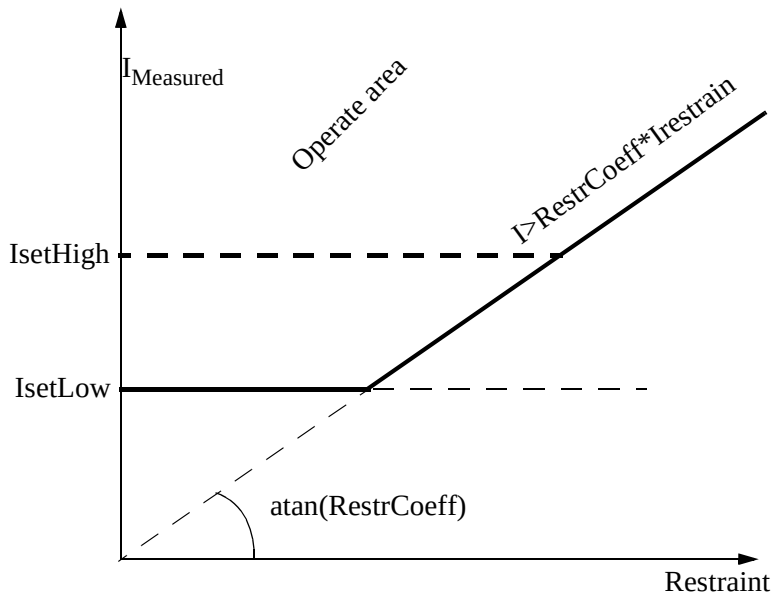

Fig. 28 Current Restraint Characteristic

It shall be noted that the restraint coefficient is the same for both (non-directional) stages. The restraint current can be separately selected in accordance with the following table:

Table 16: Restraint Current Selection with three-phase currents as inputs

	Set value for parameter "RestrCurr"	Comment
1	PS	GF function will use the magnitude of the internally calculated positive sequence current phasor as the current restraint quantity
2	NS	GF function will use the magnitude of the internally calculated negative sequence current phasor as the current restraint quantity
3	3ZS	GF function will use the magnitude of the internally calculated three times zero sequence current phasor as the current restraint quantity
4	MAX	GF function will use the magnitude of the input current phasor with maximum magnitude as the current restraint quantity

Two possible applications for this current restraint feature are presented below:

Example 1: A sensitive setting for negative or zero sequence overcurrent protection is often required. This can cause unwanted operation of such a function under certain circumstances (i.e. light load condition or heavy fault followed by main CT saturation). In order to make such function more secure it is possible to restrain it by requiring that at the same time the measured negative or zero sequence current must be bigger than 5 to 10% of the positive sequence current or maximum phase current of the protected object. This is now easy to obtain in the GF function by enabling this built-in feature.

Example 2: Pole disagreement protection is often required. This can be achieved by using the GF function by comparing the unbalance current with a pre-set level. In order to make such a function more secure it is possible to restrain it by requiring that at the same time the measured unbalance current must be bigger than 95% of the maximum phase current. Such an arrangement is easy to obtain in the GF function by enabling the current restraint feature.

15.6 Voltage Control/Restraint Feature

When enabled, this feature makes the pickup level of the (non-directional) GF overcurrent stages variable in accordance with the magnitude of the measured voltage. Once the correct pickup level is determined for every function execution, the function continue to work as described earlier. This feature has separate setting parameters for the LowSet and HighSet stages. Here it is of the outmost importance to understand that the selected voltage will be used for this feature. Therefore it is the sole responsibility of the end user to select the appropriate voltage and current signals in order to get proper functionality. Figure 29 gives an example how current pickup levels can vary with measured voltage magnitude:

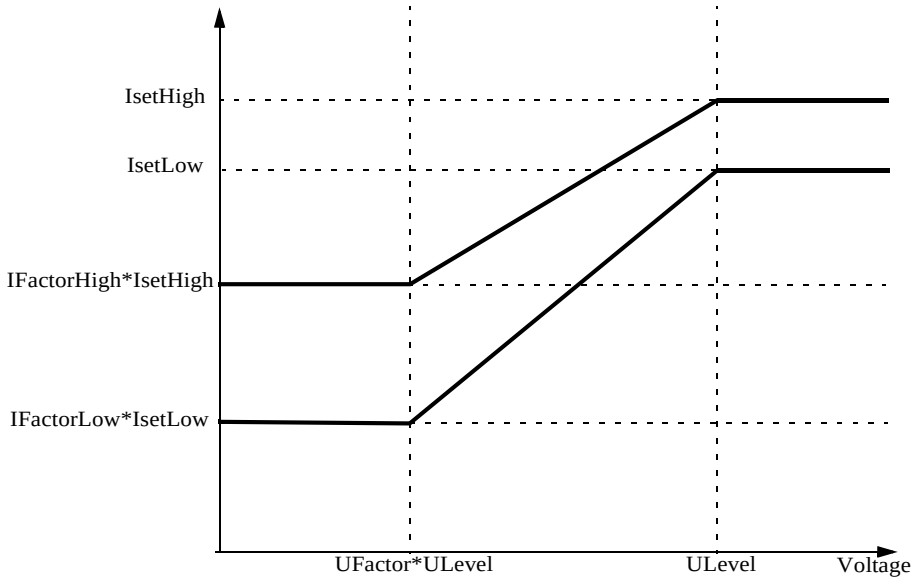

Fig. 29 Current Pickup variation with Measured Voltage Magnitude

The setting parameters ULevel, UFactor, IFactorLow & IFactorHigh (see Figure 29) are the relevant parameters which influence the pickup value of the two (non-directional) overcurrent stages.

A traditional voltage controlled functionality is obtained when the following settings are applied:

- set ULevel to the desired voltage level at which the overcurrent stages shall drop their pick-up value (i.e. 60%)
- set UFactor to the default value of 0.99
- set IFactorLow or IFactorHigh to values less than 1.00 (i.e. 0.5)

When these settings are implemented the mid portion of the characteristic from Figure 29 practically disappears and only first and third part of the characteristic are used by the GF function. Therefore the voltage controlled overcurrent relay is obtained.

In this way the traditional voltage restrained functionality is obtained with the following settings:

- set ULevel to 100% (i.e. rated voltage)
- set UFactor to 0.25 (i.e. 25%)
- set IFactorLow or IFactorHigh to 0.25 (i.e. 25%)

When these settings are applied the traditional voltage restrained overcurrent relay is obtained. However it should be noted that the setting ranges for the voltage restraint feature are quite wide. This offers some additional application possibilities (see Last Chapter for more information).

15.7 Directional Feature

The operation of the two overcurrent stages in the GF function can be made directional by enabling the directional feature built-into this function. This feature has separate setting parameters for LowSet and HighSet stages. The setting for relay characteristic angle (i.e. rca in Figure 30) can be set from -180° to +180°. Negative rca value means that the “maximum tork angle” (i.e. mta in Figure 30) line lags the reference voltage. Positive rca value means that the mta line leads the reference voltage. For this feature it is of the outmost importance to understand that the selected voltage and current will be used for directional decision. Therefore it is the sole responsibility of the end user to select the appropriate current and voltage signals in order to get a proper directional decision. The GF function will NOT do this automatically. It will just simply use the current and voltage phasors selected by the end user to check the directional criteria. The following table gives an overview of the typical choices (but not the only possible ones) for these two quantities for traditional directional relays:

Table 17: Typical current & voltage choices for directional function

Set value for parameter “CurrentInput”	Set value for parameter “VoltageInput”	Comment
PS	PS	Directional positive sequence overcurrent function is obtained. Typical setting for rca is from -45° to -90° depending on the power system voltage level (i.e. X/R ratio)
NS	-NS	Directional negative sequence overcurrent function is obtained. Typical setting for rca is from -45° to -90° depending on the power system voltage level (i.e. X/R ratio)

Table 17: Typical current & voltage choices for directional function

Set value for parameter “CurrentInput”	Set value for parameter “VoltageInput”	Comment
3ZS	-3ZS	Directional zero sequence overcurrent function is obtained. Typical setting for rca is from 0° to -90° depending on the power system earthing (i.e. solidly earthed, earthed via resistor, etc.)
L1	L2L3	Directional overcurrent function for the first phase is obtained. Typical setting for rca is $+30^o$ or $+45^o$
L2	L3L1	Directional overcurrent function for the second phase is obtained. Typical setting for rca is $+30^o$ or $+45^o$
L3	L1L2	Directional overcurrent function for the third phase is obtained. Typical setting for rca is $+30^o$ or $+45^o$

Unbalance current or voltage measurement shall not be used when the directional feature is enabled.

It shall be noted that the GF directional feature has two different operating principles selectable by a parameter setting. The first principle, referred as “I & U” in the parameter setting tool, checks the following:

- that the magnitude of the measured current is bigger than the set pick-up level
- that the phasor of the measured current is within the operating region (defined by the relay operate angle, roa parameter setting; see Figure 30)

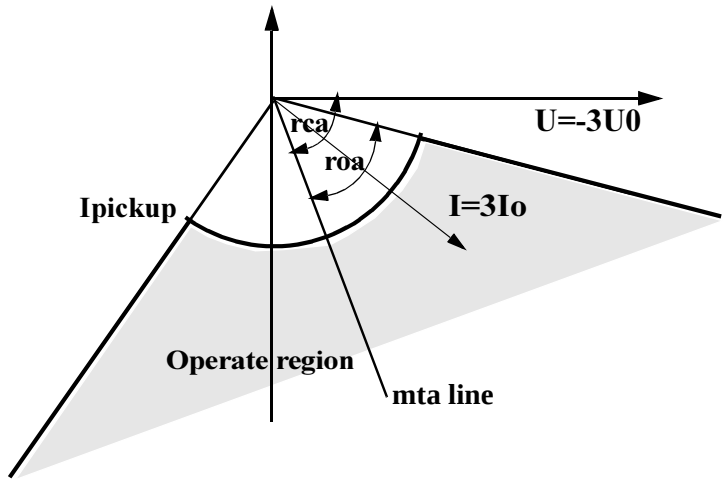

Fig. 30 "I & U" directional operating principle for GF (rca=-75°, roa=50°)

The second principle, referred as "Icos(Φ) & U" in the parameter setting tool, checks the following:

- that the product I*cos(Φ) is bigger than the set pick-up level, where Φ is angle between the current phasor and the mta line
- that the phasor of the measured current is within the operating region (defined by the Icos(Φ) straight line and the relay operate angle, roa parameter setting; see Figure 31)

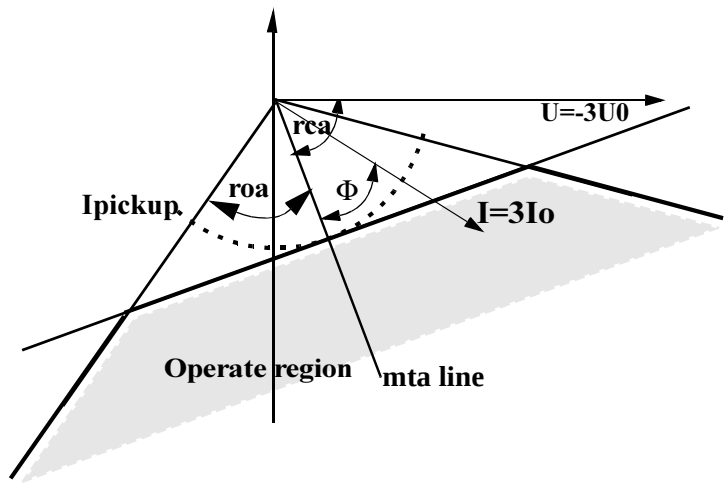

Fig. 31 "Icos(Φ) & U" directional operating principle for GF (rca=-75°, roa=50°)

It shall be noted that the directional feature does NOT incorporate voltage memory. However, it is possible to decide by a parameter setting how the individual stage shall behave when the magnitude of the reference (i.e. polarizing) voltage falls below the pre-set value. It can be:

- blocked (i.e. operation prevented for low magnitude of the reference voltage)
- non-directional (i.e. operation allowed for low magnitude of the reference voltage)

The direction of the operation is individually settable for both LowSet and HighSet overcurrent stages (i.e. Non-directional/Forward/Reverse). However it shall be noted that the following convention has been used within the GF function:

- the setting Forward means that the GF function will operate for faults in the connected power system
- the setting Reverse means that the GF function will operate for faults in the protected transformer and for faults in the power system connected on the other side of the transformer

As an example, this convention is shown for the two GF functions located on two different sides of the power transformer in the following figure:

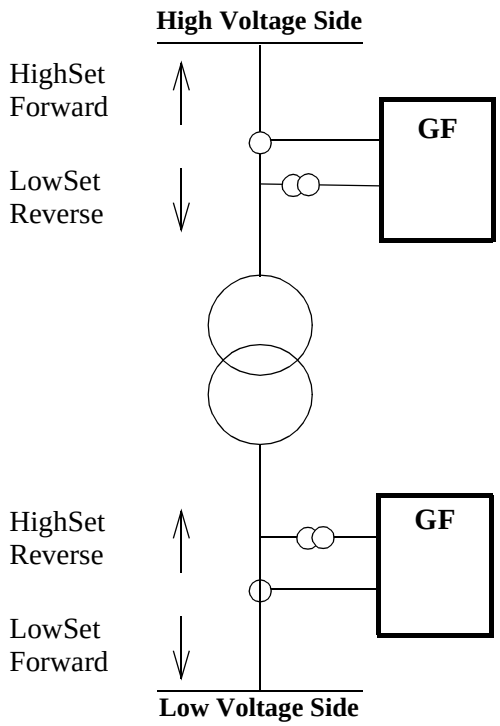

Fig. 32 Forward & Reverse convention for GF function in RET 521

15.8 Over/Under Voltage Feature

The GF function has one overvoltage and one undervoltage protection stage built-in. These stages have a fixed hysteresis (i.e. reset ratio) of 99% and 101% respectively. These two voltage stages use the selected measured voltage for the operating quantity. The setting parameters are completely independent for these two stages. However, it is possible to use only definite time delay for both of them. There is not any correlation or influence between operation of the overcurrent and over/under voltage stages within the GF function. If such correlation is desired (i.e. fuse-failure or inadvertant energising functionality), it have to be performed externally in the terminal configuration, utilizing internal logical gates and individual stages blocking inputs which are available on every GF function.

15.9 Impedance Based Application Possibilities with GF Function

By combining different built-in GF function features it is possible to achieve the following functionality

- Non-directional underimpedance protection with circular characteristic centred around the origin in the impedance plain
- Underimpedance protection with mho characteristic

These two applications will be explained in next two paragraphs.

15.9.1 Non-directional underimpedance protection with circular characteristic

It is possible to form such a protection with the GF function by simultaneously enabling the non-directional overcurrent stages and voltage restrain feature. The possible application will be explained with a practical example:

Example #1 / Question: Can the GF function be used for generator-transformer block backup underimpedance protection? Two underimpedance zones are required. One which should not overreach through the transformer and the second one which should start when the measured impedance drops below 60% of generator nominal load impedance? See Figure 33 for relevant power system details.

Example #1 / Answer: Yes it can.

To achieve this functionality three GF modules shall be used (i.e. GF01, GF02 and GF03). Each module will measure the current and voltage signal from one of the three phases (i.e. I_{L2} & U_{L2}). The HighSet will be used as the fast ‘zone 1’ and the LowSet as the slow ‘zone 2’.

In order not to overreach through the power transformer, the ‘zone 1’ shall be set to 75% of the power transformer impedance. The transformer impedance on the 10.5kV side is equal to:

$XT=0.12*(10.5^2/55)=0.241$ Ohms/phase

Therefore the setting for the ‘zone 1’ shall correspond to Z_{Z1}=0.75*0.241=0.181 Ohms/phase in primary ohms. In order to obtain this impedance setting, the corresponding current pickup of the HighSet stage shall be calculated in accordance with the following formula:

$$ISetHigh = \frac{U_{Base}}{Z_{Z1}} \times \frac{100}{I_{Base}} = \frac{10500/(\sqrt{3})}{0,181} \times \frac{100}{3002} = 1116 percent$$

where

U_{Base} is nominal phase-to-ground voltage given as base value to the GF function

I_{Base} is nominal generator current given as base value to the GF function

A definite time delay of 10-30 ms shall be used for the HighSet stage in order to coordinate with possible fuse-failure function operation.

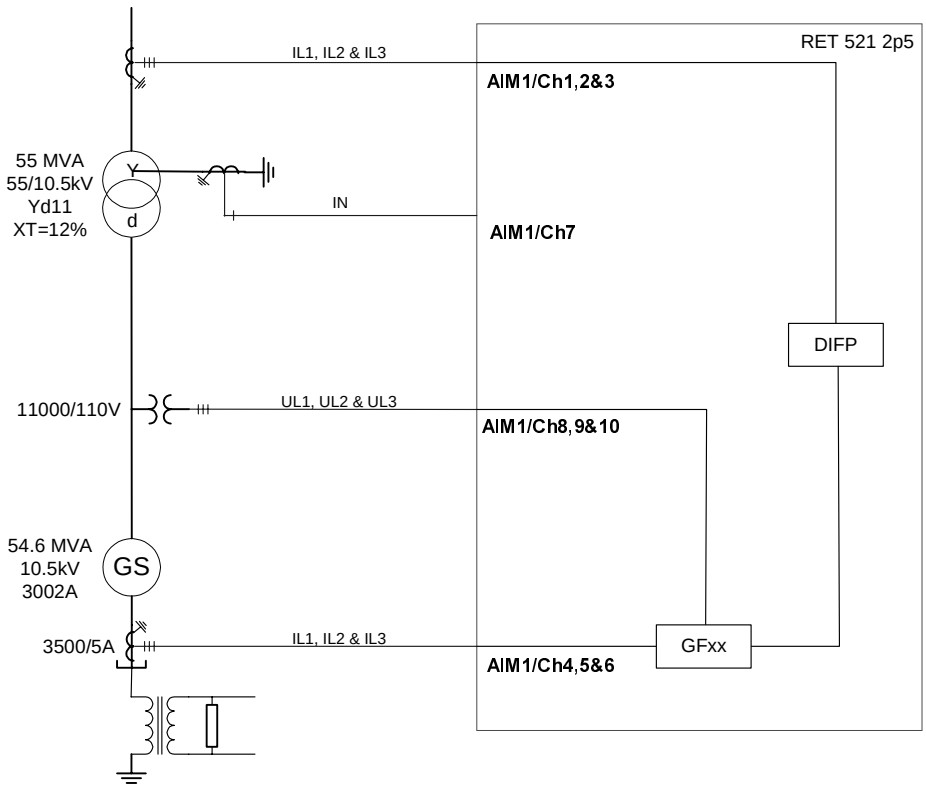

Fig. 33 Power system setup for Example 1

‘Zone 2’ shall be set to 60% of the nominal generator load impedance. Therefore:

Z_{Z2}= 0.60*(10.5^2/54.6)=0.60*2.019=1.212 Ohms/phase in primary ohms. In order to obtain this impedance setting, the corresponding current pickup of the LowSet stage shall be calculated in accordance with the following formula:

$$ISetLow = \frac{U_{Base}}{Z_{Z2}} \times \frac{100}{I_{Base}} = \frac{10500/(\sqrt{3})}{1,212} \times \frac{100}{3002} = 167 percent$$

A definite time delay of at least 400ms-800ms should be used for the LowSet stage in order to coordinate with other relays in the system. Second harmonic blocking can be used to restrain operation during power transformer inrush.

The above calculated values for ISetHigh & ISetLow are the current pickups for nominal phase-to-ground voltage. In order to obtain the underimpedance characteristic, the voltage restraint feature shall be enabled and set as well. For this application the following settings are recommended:

Table 18: Voltage Restraint Feature Settings

Parameter Name	Set Value	Comment
OperUrestr	On	In order to enable voltage restraint feature
ULevel	100%	This is the voltage level for which ISetLow & ISetHigh are calculated (i.e. 100% of U_{Base})
UFactor	0.05	Voltage level when the voltage restraint feature stops working
IFactorLow	0.05	Current level below which LowSet (i.e. ‘Zone 2’) will stop operating regardless of the magnitude of the measured voltage [i.e. 0.05*(ISetLow/100)*I_{Base}=250A Primary or 8.3% of the generator rating]
IFactorHigh	0.05	Current level below which HighSet (i.e. ‘Zone 1’) will stop operating regardless of the magnitude of the measured voltage [i.e. 0.05*(ISetHigh/100)*I_{Base}=1675A Primary or 56% of the generator rating]

The corresponding underimpedance characteristic in primary ohms is shown in Figure 34.

It shall be noted that this type of underimpedance function can as well be obtained in a similar way for other types of measured voltage and current (i.e. positive sequence, phase-to-phase, etc.).

In order to prevent unwanted operation of such underimpedance functions, it is necessary to block these GF modules in the configuration tool in case of loss of VT potential (i.e. fuse failure). This can be achieved externally via binary input or by using another GF function as the fuse-failure function.

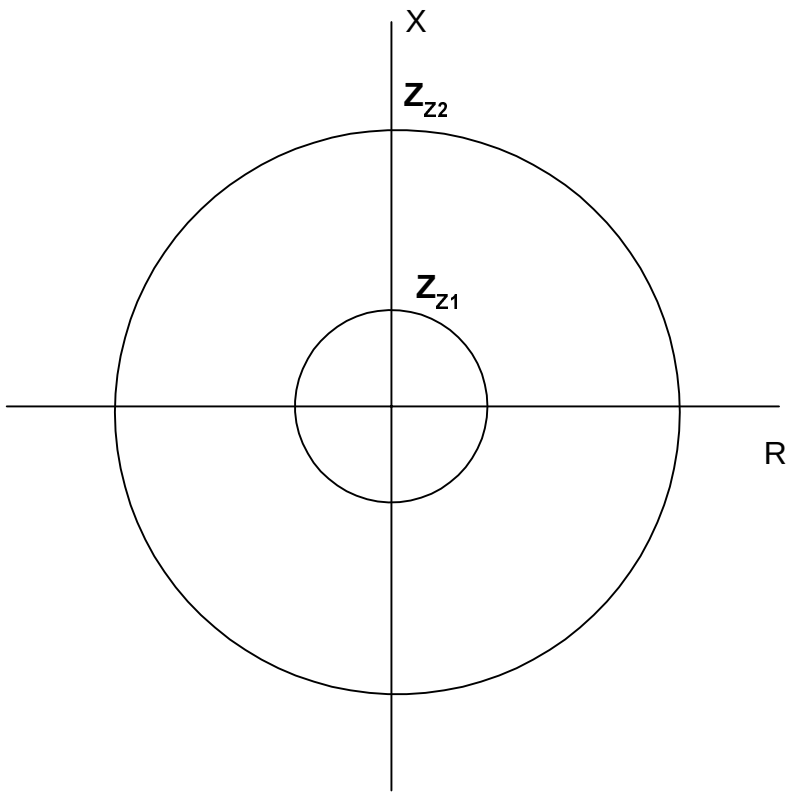

Fig. 34 Underimpedance Characteristic with GF function

15.9.2 Underimpedance protection with mho characteristic

It is possible to form such protection with the GF function by simultaneously enabling the overcurrent stage, the directional feature with “Icos(Φ) & U” characteristic with roa set to 90°, and the voltage restraint feature. The operating characteristic of one such LowSet element is shown in Figure 35.

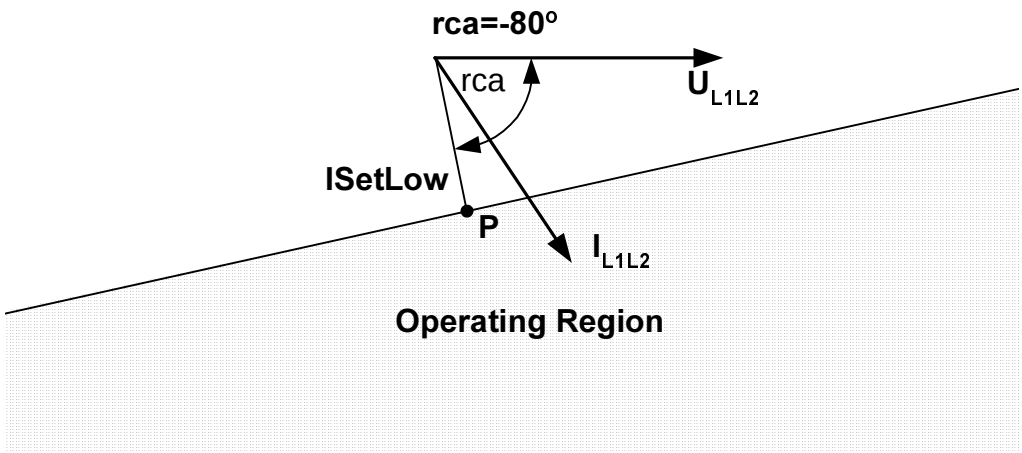

Fig. 35 Operating region of the directional LowSet element with "Icos(Φ) & U" characteristic

By simple mathematics it can be shown that this operating region from U,I plane is transferred to a circular mho operating region in the corresponding R,X plain as shown in Figure 36:

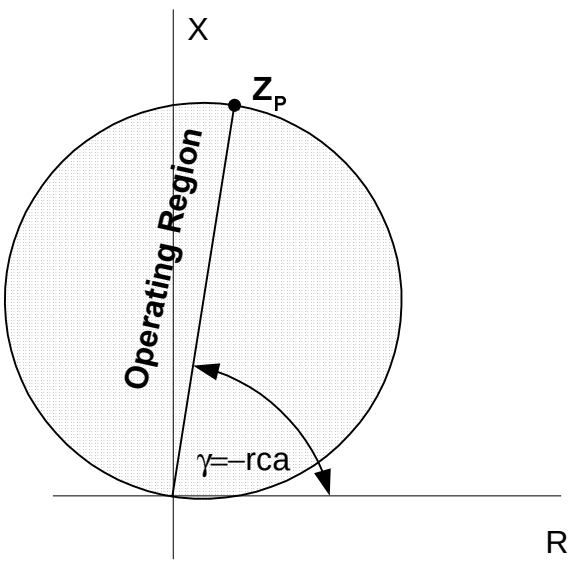

Fig. 36 Corresponding characteristic to Figure 35 in the impedance plain

It is interesting to notice the following properties of this transformation:

- point P from the U,I plane transfers to point Z_P in the impedance plain
- Z_P magnitude in primary only can be calculated as U_{Base}/((ISetLow/100)*I_{Base}) and it represents the characteristic impedance of the mho circle
- Characteristic angle γ of the mho circle is equal to the negative value of the set rca value for the GF directional criterion.

In order to obtain underimpedance mho characteristic with the fixed diameter in the impedance plain, the voltage restraint feature shall be enabled and set as well. These settings shall be done in exactly the same way as explained for the circular under-impedance function (see Table 18 for more details).

It shall be noted that this type of underimpedance mho function can as well be obtained in a similar way for other types of measured voltage and current input (i.e. positive sequence component, phase-to-phase quantity, phase quantity, etc.).

In a similar way a mho circle with a different characteristic impedance can be obtained from the HighSet stage. It is also possible to use one stage (i.e. LowSet) as mho and the other (i.e. HighSet) with a circular, non-directional impedance characteristic. The result in the impedance plain will be an “eight shape” as shown in the Figure 37.

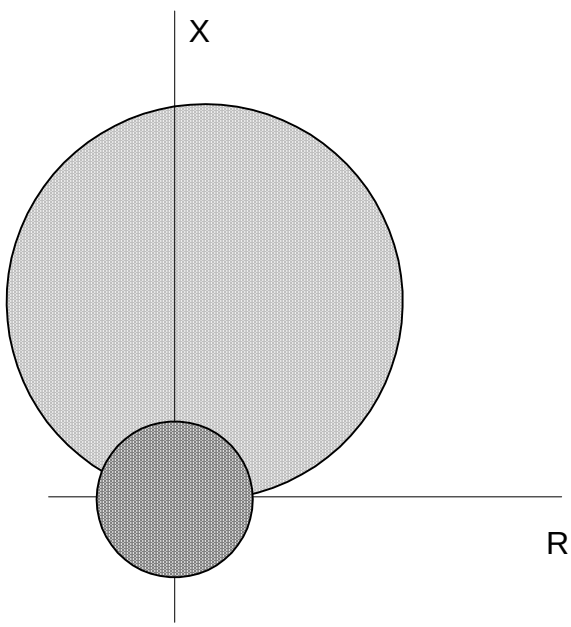

Fig. 37 Possible overall characteristic of one GF function

However it shall be noted that GF function(s) can not provide complete distance protection functionality. For example the phase selection logic, typically found in distance protection, is not available. Therefore all configured and enabled measuring “under-impedance” loops will be simultaneously active all the time irrespective of the measured quantities (i.e. existence of zero sequence current or zero sequence voltage).

15.10 Application Possibilities with GF Function and Additional Configuration in CAP 531 Tool

The GF function has very flexible and commonly used features. By combining these feature and some additional logic in the configuration, it is possible to obtain many different applications. Some of these are listed here:

- circuit breaker failure protection (reset time of the current measurement is in the range 25-30ms)
- VT fuse failure protection (negative sequence or zero sequence based measurement)
- loss of excitation
- inadvertent energising
- positive, negative and zero-sequence directional comparison accross protected object (i.e. power transfomer)
- etc.

16 Restricted earth fault protection (REF)

Break-down of the insulation between a phase conductor and earth in an effectively or low impedance earthed power system results in a large fault current. A breakdown of the insulation between a transformer winding and the core or the tank may result in a large fault current which causes severe damage to the windings and the transformer core. A high gas pressure may developed, damaging the transformer tank.

Fast and sensitive detection of earth faults in a power transformer winding can be obtained by the restricted earth fault protection in solidly earthed or low impedance earthed networks. The only requirement is that the power transformer winding is connected to earth in the star point (in case of star-connected windings) or via separate earthing transformer (in case of delta-connected windings).

16.1 General

The restricted earth fault function is used as a unit protection function. It protects the power transformer winding against the faults involving earth. However, it should be noted that the earth faults are the most likely and common type of fault.

Overall transformer differential protection (DIFP) may not be sensitive enough to operate for:

- earth faults in the transformer winding when the network is earthed through an impedance,
- earth faults in the transformer winding in solidly earthed network when the point of the fault is close to the winding star point.

For these type of faults the restricted earth fault protection is the fastest and the most sensitive protection a power transformer winding can have. At the same time REF is not affected, as differential protection, with the following power transformer related phenomena:

- magnetizing inrush currents,
- overexcitation magnetizing currents,
- on load tap changer,
- external and internal phase faults which do not involve earth,
- symmetrical overload conditions.

Because of its properties the restricted earth fault protection may be used as main protection of the transformer winding for faults involving earth.

Traditionally restricted earth fault protection was based on “high impedance” differential principle. However, REF function available in RET 521 transformer protection terminal is a “low impedance” type. It can be shortly described as an earth (i.e. zero-sequence) differential function with supplementary directional check feature.

16.2 Magnitude of the earth fault current

The magnitude of the earth fault current in the transformer winding is not only controlled by the source impedance and neutral earthing impedance but also by the leakage reactance of the power transformer and the fact that the fault voltage may differ from the full system voltage according to the position of the fault in the winding.

For delta connected windings earth fault current will have its maximum value when the fault is on the winding terminal. This maximum fault current magnitude will mostly depend on the type of power network earthing.The minimum earth fault current, for delta connected windings, will appear for the fault in the midpoint of the winding. This fault current will be approximately 50% of the maximum earth fault current.

For solidly earthed, star connected windings earth fault current will have its maximum value when fault is on the winding terminal. The fault current will remain quite large for faults down to few percent off the transformer neutral, but fault current distribution will very much depend on the point of the fault. As the fault point moves closer to the star point, fault current contribution from the power system will be smaller, but the neutral current will be all the time quite large.

For low impedance earthed, star connected windings earth fault current will have its maximum value when the fault is on the winding terminal. This maximum fault current will be limited by the earthing impedance. The earth fault current will be almost zero for fault close to the star point. For faults in between the fault current will be directly proportional to the position of the fault in the winding.

16.3 Earth Fault current distribution

To successfully detect earth faults in earthed Y-connected or D-connected transformer windings the REF function shall discriminate between internal and external earth faults to the protected zone. REF function in RET 521 do this in two different ways:

- by diff-bias operating characteristics
- by the directional element

Earth fault current distribution in case of star connected windings for internal and external fault are shown in Fig. 38 and Fig. 39 respectively.

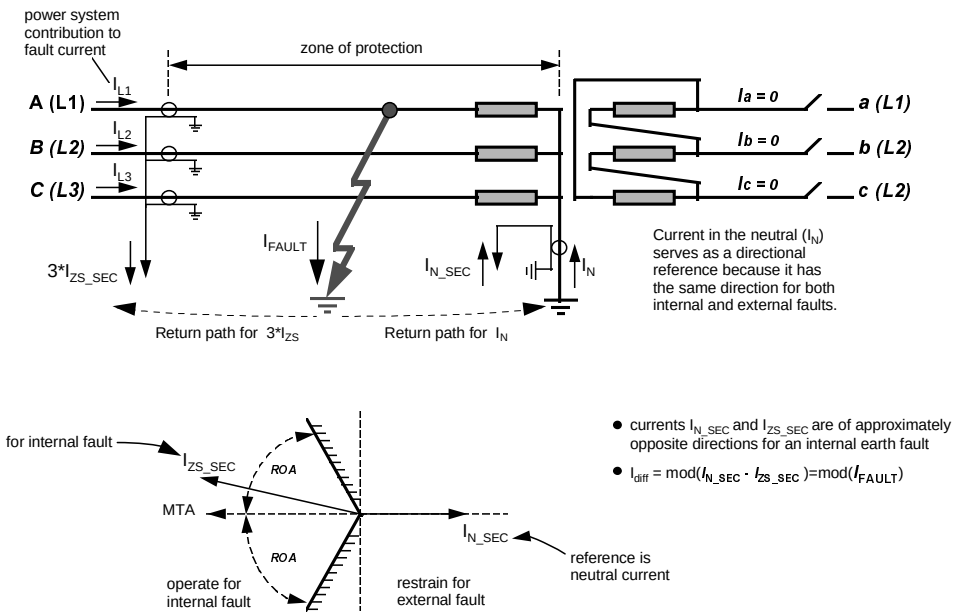

Fig. 38 Internal Earth Fault

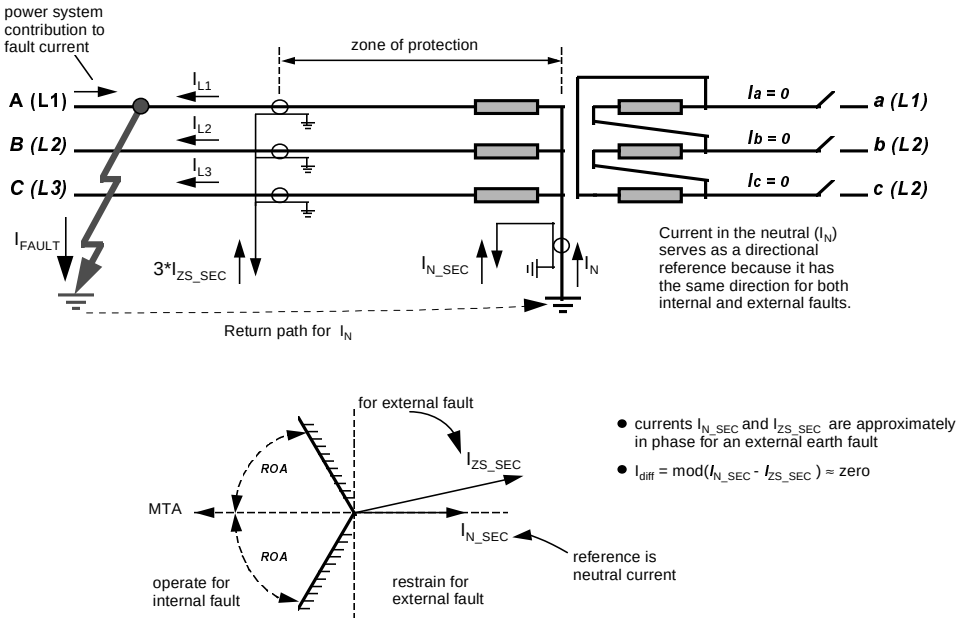

Fig. 39 External Earth Fault

As all differential protection, REF calculates the differential and the bias currents. The differential current is equal to the vectorial difference between the neutral current and residual current at the transformer winding terminal. The bias current is calculated as the relatively highest of the four currents used by REF function (i.e. three-phase currents and one neutral current). If protected winding has “T” configuration (i.e. one-and-a-half breaker station) than bias current is calculated as the relatively highest of the seven currents used by REF function (i.e. two sets of three-phase currents and one neutral current).

The REF has only one operate-bias characteristic which is shown in Fig. 40. By changing the minimum base sensitivity, REF bias characteristic in moved in the operating plain. First and second slopes are fixed to 70% and 100% respectively. First break point corresponds to a bias current of 1,25 pu. Second break point corresponds to a bias current for which the required differential current for REF function operation is 1,0 pu.

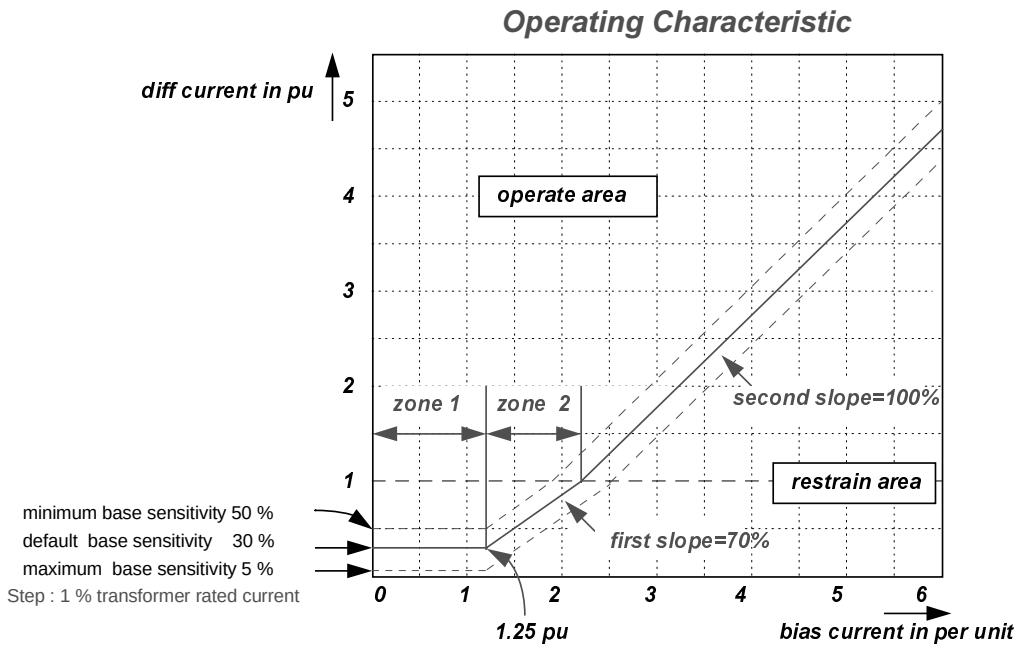

Fig. 40 Operate - bias characteristic of the restricted earth fault protection REF.

Differential and bias current from REF function are available as service values.

Additional directional criteria in REF function is pre-set to operate only for internal earth faults (See Fig. 38 and Fig. 39 for more details). However, it should be noted that is extremely important to properly set phase and neutral CT earthings (i.e. parameter “CTearth”) to enable REF directional criteria to work properly. All CT settings can be found under “Configuration” menu on built in HMI and in PST.

The second harmonic content of a neutral point current is compared to the fundamental current component. If the ratio is higher than a pre-set limit in the REF algorithm then the operation of the function is prevented. However this second harmonic blocking feature is adaptivly enabled or disabled within REF internal algorithm by monitoring, among other quantities, the level of neutral point current and status of the protected object (i.e. energised, not energised). Such solution offers increased security when protected object is energised and dependable operation in case of an internal fault.

16.4 Measured Quantities

REF is usually configured to measure one neutral current and one three-phase set of currents. If protected winding has “T” configuration (i.e. one-and-a-half breaker station) than REF should be configured to measure one neutral current and two sets of three-phase currents.

16.5 Settings

The REF is a unit protection and it is based on zero sequence currents, which only exist in case of an earth fault. Therefore the REF can be made very sensitive because no load currents need to be considered. For each REF protection module there is only three settings.

Parameter “Operation” sets the REF function ON or OFF. The parameter “Idmin” defines the operating characteristic of the REF function. It is set as percentage of the rated current of the protected winding. It is therefore very important to properly set rated winding current. The parameter “roa” defines the operate area for the directional criteria.

It is recommended to set Idmin to 30% when solidly earthed power transformer windings should be protected. For low impedance earthed winding it should be set to on third of the value of the maximum earth fault current for delta connected windings and to 5% to 10% in case of star connected windings.

17 Earth fault time current protection (TEF)

17.1 General

Break-down of the insulation between a phase conductor and earth in an effectively or low impedance earthed system results in a large fault current. A breakdown of the insulation between a transformer winding and the core or the tank may result in a large fault current which causes severe damage to the windings and the transformer core. Furthermore, a high gas pressure may develop, damaging the transformer tank.

The magnitude of the winding fault current depends both on the earth-fault level, the connection group of the transformer and the location of the fault.

A sensitive earth-fault current protection, measuring the residual current (3Io) in the connection between the power transformer windings and the bus and the current between YN-connected winding neutrals and earth will detect earth-faults both on the phase conductors and a large part of the windings. The coverage depends on the earthing of the system and also the connection diagram of the power transformer.

When used for protection of the power transformer circuits, input currents used for the earth-fault protection function in the terminal are either:

- measured residual current or calculated residual current from current transformers in the connection between the power transformer and bus.
- the measured current in the connection between the neutral point of a winding and earth.

The earth-fault current protection function in RET 521 can also be used for other feeders connected to the transformer bus. Input current will then be the measured or calculated residual current in the actual feeder. Another possible application is to use TEF as a tank protection.

Measured residual current is obtained by summation of the secondary phase currents from the current transformer group or from one current transformer encompassing all three-phase conductors. The residual current can also be obtained by summing up the three-phase current vectors mathematically.

The residual current 3Io gives rise to a residual voltage 3Uo. The residual voltage can be measured using

- a single voltage input from the open delta windings of a three-phase voltage transformer group
- a single voltage input from a voltage transformer connected between the neutral point of a winding and earth in a high impedance earthed or unearthed network. Note that the input voltage in this case will be 1 x Uo!
- a three-phase voltage input and summing up the three-phase voltage vectors internally

The current lags the voltage -3Uo by a phase angle that is equal to the angle of the zero-sequence source impedance. An example is shown in Fig. 42, where the residual current flowing towards the faulted power transformer lags the voltage UA with a phase angle equal to the impedance angle of the source impedance ZOA.

Directional function and hence selectivity for internal and external faults can be obtained by measuring the angle between the residual current and voltage.

Residual currents due to imbalance in the network can appear in the circuits of a winding with neutral connected to earth.

The magnetizing inrush current can contain a large dc component and the magnitude is generally different in the three phases. A false residual current can result due to different saturation of the line current transformer cores. If the power transformer winding neutral is earthed, the magnetizing inrush current can have a residual current component which is measured both in the neutral connection to earth and by the line current transformers. To prevent an unwanted operation, a second harmonic current blocking function is therefore available in the earth-fault current protection.

17.2 Direction and magnitude of the fault current

17.2.1 Earth-faults on a phase conductor

Earth-fault current can only flow from a part of the network which is connected to earth. Any appreciable earth fault current can only flow towards the Y- and delta windings connected to bus B respectively C in Fig. 41. In case of an external fault, only a small capacitive earth-fault current will flow from the winding towards the fault.

Hence, an earth-fault relay connected to the current transformer groups b) or c) in Fig. 41 will be selective and only operate in case of internal faults.

In case of an earth-fault in network A, part of the fault current will flow via the neutral connection of the YN-connected winding and out towards the fault. Hence, an earth-fault relay connected to current transformer group a) must be directional if selective function for internal or external earth-fault is requested.

A relay measuring the current in the connection between the winding neutral and earth can not be selective, since the fault current flows in the same direction for faults in the transformer and faults in the network, compare Fig. 38 and Fig. 39.

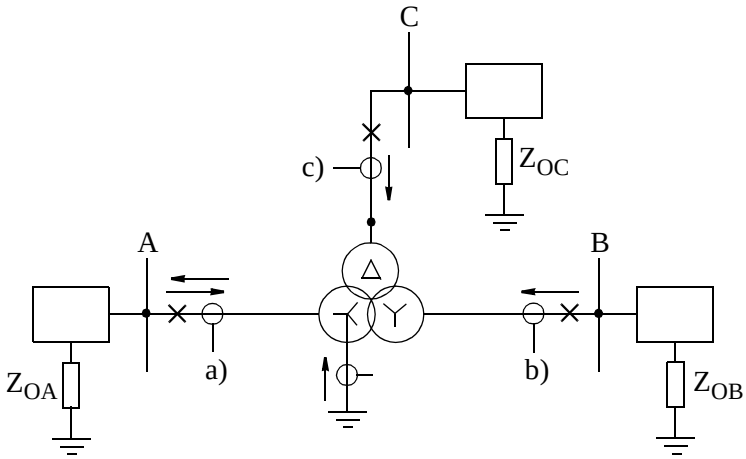

Fig. 41 Three-winding transformer with connected networks

If the positive and negative sequence impedances can be assumed equal, which normally is the case for faults in the network, the single-phase fault current can be calculated from the formula:

$$IF = \frac{3Uph}{2Zs + Zo + 3Rf}$$

where:

- Uph = phase voltage
- Rf = fault resistance in ohms
- Zo = zero-sequence source impedance of the faulted network in ohms per phase
- Zs = three-phase short circuit impedance in ohms per phase at the faulted spot
- When the three-phase short-circuit current (Isc) or the fault level MVA (S) is known, Zs is calculated from the formula:

$$Zs = \frac{Uph}{Isc} = \frac{U^2}{S}$$

where U = rated voltage between phases (kV).

For a fault close to buses B or C in Fig. 41, Zo = ZoB respectively ZoC.

For a fault close to bus A, Zo is equal to the impedance of the parallel connected zero-sequence impedances ZoT of the transformer and the source impedance ZoA of network A when the transformer is disconnected.

$$Zo = \frac{ZoA \times ZoT}{ZoA + ZoT}$$

The residual fault current IFA flowing from bus A towards the transformer is calculated from the formula:

$$IFA = IF \times \frac{ZoT}{ZoA + ZoT}$$

For the transformer in Fig. 41, with the neutral directly connected to earth, the impedance ZoT on the transformer side is equal to the zero-sequence impedance XoT of the transformer winding. If an earthing impedance Zn is connected between the winding neutral and earth, the zero sequence impedance ZoT = XoT + 3 x Zn.

The residual fault current flowing from the bus towards the transformer in case of a transformer fault is lagging the voltage -3Uo by an angle equal to the impedance angle of the source impedance of the network (For example impedance angle of ZoA for a relay connected to current transformers a) in Fig. 41).

The residual fault current flowing from the transformer towards the bus in case of an external fault is calculated from the equation

$$IFF = IF \times \frac{ZoA}{ZoA + ZoT}$$

The residual fault current flowing towards the bus is lagging the voltage -3Uo with an angle equal to the impedance angle of the zero-sequence impedance ZoT on the transformer side.

Fig. 42 shows the simplified diagram with the zero-sequence impedance diagram of the 3-winding transformer according to Fig. 41. The full lines show the connection when calculating the current for a fault on a terminal of the Yo-connected winding. The dotted lines indicate the corresponding connection when calculating faults on the terminal of the Y resp. delta windings.

For further details, see standard zero-sequence impedance diagrams for power transformers.

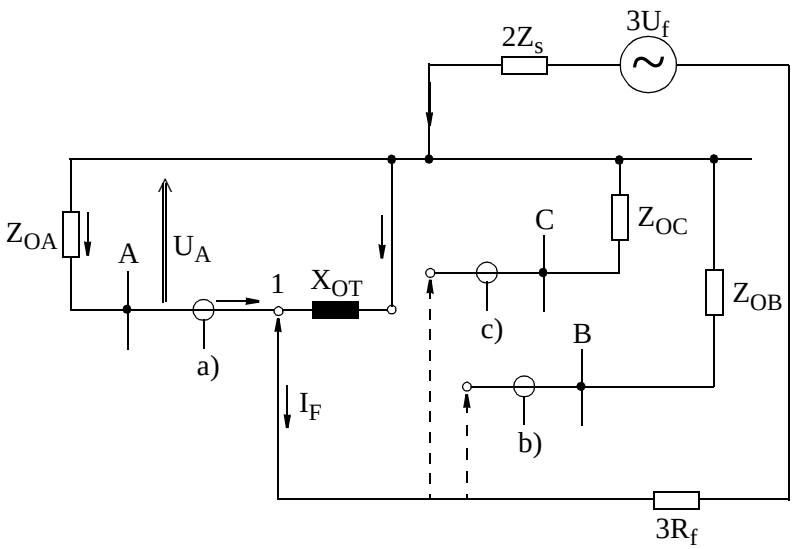

Uo = -Io x ZoIF = 3 x Io Zo = ZoA x XoT / ZoA + XoT Hence UA = - 3Uo

Fig. 42 Simplified circuits for calculation of residual fault currents

17.2.2 Earth-faults in transformer windings

17.2.2.1 Faults in delta connected windings

An earth-fault at the midpoint of one phase winding gives the minimum fault current, approximately 50% of the fault current resulting from an earth-fault on the phase conductor. The fault current increases gradually when the fault is moved towards the end of the winding. Hence, the entire winding can normally be protected.

17.2.2.2 Faults in Y-connected windings (neutral not earthed)

A winding earth-fault, close to the terminal, results in a voltage per turn far beyond the core saturation level for the part of the winding between the terminal and the fault. The magnitude of the fault current will be approximately the same as for an earth-fault on the phase conductor. The magnetizing current will normally contain a basic frequency component of more than 70%.

If the transformer also has a delta- or a YN-connected winding with direct earthed neutral in a solidly earthed system, a fault current of about 10% of the phase conductor fault current can be expected for a fault 20% off the neutral. However, if the transformer has no delta- or YN-connected winding, the earth fault current will decrease and can be expected to be about 10% of the phase conductor fault current for a fault 50% off the neutral.

The magnitude of the winding fault current can vary substantially from the stated figures depending on the magnetizing characteristics of the power transformer and other design factors.

17.2.2.3 Faults in windings (neutral earthed)

The fault current will have its maximum value when the fault is on the winding terminal. The fault current remains quite large for faults down to some few per cent off the transformer neutral, but the part of the fault current seen by an residually connected earth-fault relay decreases when the fault moves towards the neutral point of the winding. A relay measuring the current in the connection between the neutral point and earth will see practically all the fault current when the fault is close to the neutral point. This relay, however, must normally have a long time delay to be selective against other earth-fault relays in the network.

The best coverage will be achieved by the restricted earth-fault scheme.

17.3 Measured quantities

All three earth-fault time current functions in RET 521 can be configured to any single-phase or three-phase current input.The directional function can be configured to any single-phase or three-phase voltage input. The protection uses the fundamental frequency component of the currents and voltages.

When connected to a three-phase input, the residual current or voltage is calculated mathematically within RET 521.

17.4 Settings

In the CAP531 is possible to chose UserDef side as parameter setting for SIDE2W or SIDE3W. When UserDef is choose then the setting IrUserDef will be used as "rated" current for TEF.

For directional TEF the setting UrUserDef also have to be set. The direction for UserDef side is the same as for the primary side. Observe that for secondary and tertiary side Reverse direction means currents from power transformer and Forward direction means currents to power transformer.

17.4.1 Delta connected windings

The high set stage, set to 1/3 of minimum fault current for an earth fault on the winding terminal will protect the phase conductors between the current transformers and the winding and also the entire winding.

A low set stage, with setting 10% of minimum fault current for an earth fault on the winding terminal, can be used to detect developing faults. A long inverse time delay is recommended.

Second harmonic blocking, with typical setting 20% second harmonic to first harmonic ratio should be selected for both stages if the winding is connected to a network with power generation.

17.4.2 Y-connected windings

With the same settings as for delta windings according to above, the high current stage will normally cover more than 50% of the winding and the low set stage will normally cover about 80% of the winding if the power transformer also has a delta-connected or direct earthed YN-connected winding.

For a YY-connected transformer, about 50% of the winding will normally be protected.

Second harmonic blocking, with typical setting 20% second harmonic to first harmonic ratio should be selected for both stages if the winding is connected to a network with power generation.

17.4.3 Y0-connected windings

Residual currents flowing in the winding circuits due to imbalance in the network must be taken into consideration when setting the protection.

Directional function should be selected when the relay is connected to residually connected current transformers between the bus and the winding.

When directional setting “Forward” is selected, the relay operates for faults in the network. The current and time delay settings must be coordinated with the setting of other earth-fault relays in the network. The characteristic angle (rca) is set to match the impedance angle of the zero-sequence impedance XoT of the transformer if the winding neutral is direct earthed. If an earthing impedance Zn is inserted between the neutral and earth, the characteristic angle is set to match the impedance angle of XoT + 3 x Zn.

Due to the bandpass filtering, a polarizing voltage down to 1 per cent of the rated voltage will provide correct directional operation. This is also valid when the protection is connected to capacitive voltage transformers.

The minimum polarizing voltage to the protection is calculated from the formula

$$Umin = IFmin \times Zo \times \frac{U\text{sec}}{Uprim}$$

where:

- IF_{min} = minimum primary fault current
- Zo = Zero-sequence impedance of network
- U_{sec}, U_{prim} = rated phase voltages of the open delta-connected voltage transformers.

The rated transformer phase-to phase voltage is seen as 100% of Ur.

Directional setting “Reverse” is used when the protection shall operate for faults in the transformer. The characteristic angle (rca) is set to match the impedance angle of the zero-sequence source impedance of the network (For example the characteristic angle of impedance ZoA when connected to current transformers a) in Fig. 42).

As a non-directional protection function, measuring the current in the connection between the neutral point and earth, the time/current settings must be coordinated with the other earth-fault relays in the network.

17.4.4 External feeders

When used as earth-fault current protection in other feeders connected to the transformer bus, the time/current settings must be coordinated with the setting of the other relays in the network.

18 Single/three-phase time overvoltage protection (TOV)

18.1 General

18.1.1 Phase overvoltage

The overvoltage protection is applied on power system elements, such as generators, transformers, motors and power lines in order to prevent excessive voltages that can damage the insulation. Overvoltage at network frequency may also cause damage to power transformers and electric machines due to overfluxing.

Overvoltage at or close to power system frequency can occur as a result of:

1 Incorrect operation of a voltage regulator or wrong settings under manual voltage control

2 Sudden loss of load, e.g. disconnection of a heavily loaded power line

3 Low active load in transmission systems with lines with large capacitance to earth.

4 Overspeed of generator when disconnected from the network and incorrect operation of the machine AVR

5 Phase to earth faults in unearthed or high impedance earthed systems

Overvoltages in the form of transients can also occur in the network. Protection against transient voltages is basically provided by surge arrestors connected to incoming lines and busbars.

18.1.2 Residual voltage

Earth fault in the network results in a residual voltage 3Uo which can be measured by summing up the three-phase voltages vectorially:

3Uo = UL1 + UL2 + UL3

The residual voltage can be measured using:

- a single voltage input from the broken secondary windings of a three-phase voltage transformer group.
- a single voltage input from a voltage transformer connected between the neutral point of a winding and earth in a high impedance earthed or unearthed network. Note that the input voltage in this case will be 1 x Uo!
- a three-phase voltage input and summing up the three-phase voltage vectors mathematically.

The residual voltage is transferred to all parts of the network which are galvanically interconnected with the faulted spot. It is also transmitted through power transformers with two Y-connected windings with the neutrals connected to earth, and, to a small extent, through the capacitances between the high and low voltage windings of power transformers.

The residual voltage is highest at the faulted spot. In a high impedance earthed system, most of the voltage is generated across the earthing impedance, and the residual voltage will be approximately the same in the whole network. If the system is solidly earthed, the residual voltage is reduced towards the source (earthing point).

A residual voltage, normally limited to some few per cent of rated phase voltage, can be present under normal service conditions due to imbalances in the network.

The TOV protection is generally used as a backup function for the selective earth-fault protections in a network.

18.1.2.1 Magnitude of the residual fault voltage

If the positive and negative sequence impedances can be assumed equal, which normally is the case for faults in the network, the residual voltage in case of a single-phase earth-fault can be calculated from the formula:

$$3Uo = \frac{3Uph \times Zo}{2Zs + Zo + 3Rf}$$

where:

- Uph = phase voltage
- Rf = fault resistance in ohms
- Zo = zero-sequence impedance in ohms per phase at the faulted spot.
- Z_s = three-phase short circuit impedance in ohms per phase at the faulted spot

When the three-phase short-circuit current (Isc) or the fault level MVA (S) is known, Zs is calculated from the formula:

$$Zs = \frac{Uph}{Isc} = \frac{U^2}{S}$$

where U = rated voltage between phases (kV).

If the positive and negative impedances are assumed equal, the residual voltage in case of a phase-phase-earth fault without fault resistance can be calculated from the formula:

$$3Uo = \frac{3Uph \times Zo}{Zs + 2Zo}$$

For this type of fault, the residual voltage rapidly decreases when the fault resistance between phases and earth increases.

Generally, the function of the neutral point voltage protection in case of single-phase earth faults is considered when determining the settings. Two-phase faults with connection to earth will be detected by the phase short-circuit protection.

18.2 Measured quantities

The time overvoltage protection TOV can be configured to any three-phase or single-phase voltage input. It calculates the fundamental frequency component of the voltage.

With Function Selector setting 1 = SU for single-phase voltage input, the TOV protection is normally used to measure a phase-to-phase voltage or the residual voltage (neutral voltage protection).

The three-phase voltage input function can be set to measure the phase-to-earth voltages or the residual voltage 3Uo. The selection is made with the CAP 531 configuration tool, with Function Selector setting 2 = G3U for measuring the phase-to-earth voltages. Setting 3= G3URES is used for measuring the residual voltage 3Uo when TOV is used as an earth-fault protection.

18.3 Settings

The TOV protection has two voltage stages, the low set stage and the high set stage. Definite time or very inverse time delay can be selected for the low set stage. The high set stage has a definite time delay.

The operate voltage of the TOV protection is set in per cent of the rated phase-to-phase voltage of the transformer winding. The operate voltage on the relay terminals is equal to the set primary voltage multiplied by the set ratio of the voltage transformers.

18.3.1 Settings for phase overvoltage protection

The low set voltage stage is normally, with some margin, set higher than maximum voltage under service conditions and with sufficient time delay to override transient overvoltages. The high voltage stage with short time delay can be set slightly higher than transient overvoltages due to load rejection etc.

18.3.2 Settings for neutral voltage protection

The operate value of the neutral time voltage function must - with a margin - be set higher than the maximum residual voltage to the protection when there is no fault in the network. The time/voltage settings must be coordinated with the setting of other earth-fault relays in the network.

The minimum residual voltage to the protection in case of a single-phase earth fault is calculated from the formula:

$$Umin = IFmin \times Zo \frac{Usec}{Uprim}$$

where:

- IF_{min} = minimum primary earth fault current.
- U_{sec}, U_{prim} = rated phase voltages of the open delta-connected voltage transformers.
- Z_o = zero sequence impedance at the faulted spot

18.3.3 Setting example:

Rated voltage of the transformer winding: 10 kV

Rated VT ratio:

$$\frac{11}{\sqrt{3}} / \frac{0,11}{\sqrt{3}} / \frac{0,11}{3}$$

18.3.3.1 Phase overvoltage protection

Assume that stage UsetLow shall be set to operate at 120% of rated transformer voltage.

1) Settings for three-phase voltage input:

Function Selector 2=G3U

VTprim = 11,0 kV VTsec = 110V

Uset Low = 120/root3 = 69%.

The operate phase-to-earth voltage on the relay terminal is equal to 10 000 x 0,11/11 x 69/100 = 69 V.

2) Settings for single input of phase-to-phase voltage:

Function Selector 1=SU

VTprim = 11,0 kV VTsec = 110V

Uset Low = 120%.

The operate phase-to-phase voltage on the relay input terminal is equal to 10 000 x 0,11/11 x 120/100 = 120 V

18.3.3.2 Using TOV as a neutral voltage protection

Assume setting UsetLow = neutral point voltage Uo = 10% of rated phase voltage of the transformer winding.

1) With three-phase voltage input and Function Selector setting 3=G3URES, the protection measures the voltage 3Uo. Settings:

VTprim = 11,0 kV VTsec = 110 V

UsetLow = 10/root3 x 3 = 17%

The operate voltage on the relay side, measured by injection between one phase terminal and neutral, is

10 000 x 0,11/11 x 17/100 = 17 V.

2) Single voltage input from the broken delta windings with rated secondary voltage 110/3 V. The input voltage to the protection is 3Uo and the setting becomes

Function Selector 1=SU

VTprim = 11,0 kV VTsec = 63 V (see Note below)

UsetLow = 10/root3 x 3 = 17% like above.

Note: The VT transformer ratio for the broken delta windings must be correctly set. The set values in RET 521 are primary and secondary phase-to-phase voltages in a three-phase system. In the example above, the VT ratio of the broken delta windings is set as VTprim = 11 kV and VTsec = 110 x root3/3 = 63 V.

The operate voltage, measured on the relay terminals, is

10 000 x 0,063/11 x 17/100 = 9,7 V.

3) Single-phase input from VT with ratio 11/0,11 kV connected between transformer neutral and earth. The input voltage to the protection is 1 x Uo, and the setting becomes

Function Selector 1=SU

VTprim = 11,0 kV VTsec = 110V

UsetLow = 10/root3 = 6%.

The operate voltage, measured on the relay terminals is

10 000 x 0.11/11 x 6/100 = 6 V.

19 Single/three-phase time undervoltage protection (TUV)

19.1 General

The undervoltage protection is applied on power system elements, such as generators, transformers, motors and power lines in order to detect low voltage conditions.

Low voltage conditions are caused by abnormal operation or fault in the power system.

The undervoltage protection can be used in combination with overcurrent protections, either as restraint or in logic “and gates” of the trip signals issued by the two functions. Other applications are the detection of "no voltage" condition, e.g. before the energisation of a HV line or for automatic breaker trip in case of a blackout.

The undervoltage protection is also used to initiate voltage correction measures, like insertion of shunt capacitor batteries to compensate for reactive load and thereby increasing the voltage. The undervoltage protection can be used to disconnect from the network apparatuses, like electric motors, which will be damaged when subject to service under low voltage conditions, .

The time undervoltage protection TUV deals with low voltage conditions at power system frequency, which can depend on:

1 Malfunctioning of a voltage regulator or wrong settings under manual control.

2 Overload.

3 Short circuits, often as phase to earth faults (unsymmetrical voltage decrease).

1 and 2 cause symmetrical voltage decrease.

19.2 Measured quantities

The time undervoltage protection TUV protection can be configured to any three-phase or single-phase voltage input. It calculates the fundamental frequency component of the voltage.

The three-phase undervoltage function calculates the three phase-to-earth voltages.With the CAP531 configuration tool one can select whether one phase voltage below set operating value is sufficient for tripping or if all three-phase voltages need be below set value.

When tripping for one phase below set value is selected, the undervoltage protection can also detect earth faults.

When single-phase voltage input is used, the phase-to-phase application is somehow limited; only symmetrical voltage drops can certainly be detected. An earth fault in an unearthed or high impedance earthed system will not be seen by the protection.

The same applies to the phase-to-earth measuring version which can only detect a voltage drop in the monitored phase; this last version is used in special applications.

19.3 Settings

The operate voltage of the TUV protection is set in per cent of the rated phase-to-phase voltage of the transformer winding. The operate voltage on the relay terminals is equal to the set primary voltage multiplied by the set ratio of the voltage transformers.

When using the three-phase voltage input, the setting figure must take into consideration that the operate phase-to-earth voltage is set in per cent of the phase-to-phase voltage.

The TUV function has two independent voltage stages, a high set stage and a low set stage. Both stages have definite time delay.

19.3.1 Setting example

Assume:

- Rated voltage of transformer winding: 10 kV
- Rated VT ratio: 11/0,11

Assume that stage UsetHigh shall be set to operate at 80% of rated transformer voltage.

1 Settings for single input of phase-to-phase voltage:

- Function Selector 1=SU
- VTprim = 11,0 kV VTsec = 110V
- UsetLow = 80%
- The operate phase-to-phase voltage on the relay input terminal is equal to

$$10000 \times \frac{0.11}{11} \times \frac{80}{100} = 80\text{V} .$$

2 Settings for three-phase voltage input:

- Function Selector 2=G3U
- VTprim = 11,0 kV
- VTsec = 110V
- UsetLow = $\frac{80}{\sqrt{3}} = 46\%$
- The operate phase-to-neutral voltage on the relay terminal is equal to

$$10000 \times \frac{0.11}{11} \times \frac{46}{100} = 69\text{V} .$$

20 Thermal overload protection (THOL)

20.1 General

The insulating material surrounding the phase current conductors in transformers, reactors, cables and other electrical equipment ages too rapidly if the temperature exceeds the design limit value.

All electrical conductors have a certain resistance, and the active power loss I^2R gives rise to a temperature increase which is proportional to the square of the current. Heat energy is carried off in proportion to the temperature difference between the conductor and the surrounding material and the temperature increase of the conductor can be defined as a function of time by the so called thermal time constant T, as shown in Fig. 43.

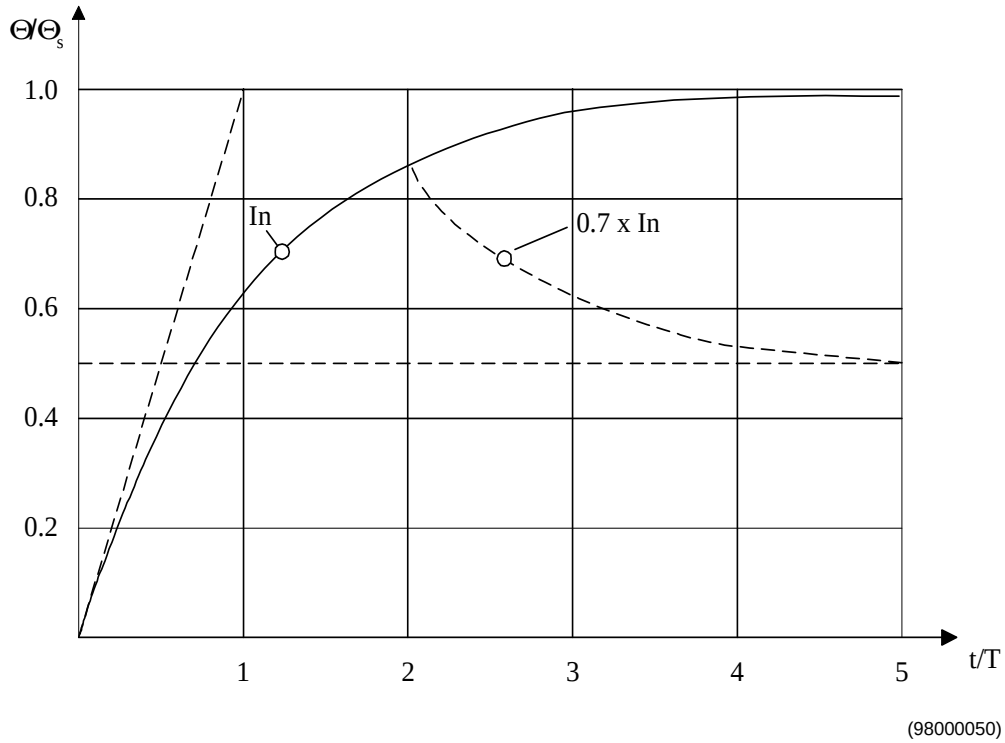

Fig. 43 Temperature rise as function of time

After a time equal to T, the temperature increase has reached 63% of the final value. Since the increase is proportional to the square of the current, a current equal to 1,26 x rated value will after time T give a temperature increase equal to the rated final temperature increase ($1,26^2$ x 0,63 = 1) and the final temperature rise will be $1,26^2$ = 1,6 times rated value.

After a time equal to 4 x T, the temperature increase is about 98% of the final value.

If the current is reduced, the temperature decreases exponentially towards the new steady state value. The dotted line in Fig. 43 shows how the temperature decreases towards $0,7^2$ = 0,49 times rated temperature increase when the current after a time equal to 2 x T is reduced from 100% to 70% of rated value. The time constant T remains unaltered as long as the cooling is unaltered.

Power transformers and cables are often required to permit short-time overloads up to 1,5 x rated current. The phase short-circuit overcurrent relays will normally be set with an operating value far too high to provide any thermal protection.

Temperature and overload monitoring of oil-filled transformers is carried out with indicating thermostats which are standard accessories.The oil thermometer, which measures the top oil temperature, can not be relied upon to detect short-time overloads beyond permissible limits.

Large transformers often have a so-called “winding thermometer”, which measures the oil temperature and also is provided with a heater element fed from the load current. This device provides a good monitoring of the temperature of the winding.

Transformers without “winding thermometer” should have a thermal current protection with an operating current/time characteristic that corresponds to the current overload characteristic of the transformer windings. For transformers with “winding thermometer”, a thermal current protection will provide a back-up function for this monitoring device.

A power transformer can have two different MVA ratings, one basic rating and one higher rating with forced cooling. The thermal current function in RET521 therefore has two different load current and thermal time constant settings. The high current setting is activated by activating a binary input on the protection.

The thermal current protection function can also be used to protect feeder cables connected to the transformer.

Electrical cables which can be loaded up to the permissible thermal load current should be provided with both thermal and short-circuit protection. The thermal time constant is normally shorter for cables surrounded by air than for cables placed in the ground.This should be taken into consideration if part of the cable is surrounded by air.

20.2 Measured quantities

The thermal overload function can be configured to any three-phase current input. It uses the fundamental frequency component of the largest of the three-phase currents.

20.3 Fault conditions

A short-time increment of the load current beyond maximum permitted continuous value is not a fault condition as such. It is, however, a condition which must be detected and action must be taken before it results in thermal damages.

20.4 Settings

The thermal overcurrent function in RET521 has time-current characteristics which follows the equation:

$$t = T \times \ln \frac{I^2 - Ip^2}{I^2 - Itr^2}$$

where:

- T= thermal time constant
- I = overload current
- Ip= current previous to the overload, assuming sufficient long time to reach steady-state temperature
- Itr = thermal overload steady state trip current

The thermal protection has two current stages with settable time constant:

- normal base current Ib1, set in per cent of rated current Ir, with Time Constant1
- base current Ib2, set in per cent of rated current Ir, with Time Constant2.

Current stage Ib2 is activated and replaces stage Ib1 when the assigned binary input signal is activated.The thermal characteristics of the protection is then adapted to the conditions set to correspond to forced cooling. The thermal content in per cent of the operate value is kept unchanged when switching over between the stages.

The trip level is determined by the setting of the steady state trip current Itr. The setting is made in per cent of the set base current and the percentage setting is common for both current stages.

20.4.1 Setting example

Assume the following settings:

Stage 1: Base current Ib1= 90% of Ir. Time Constant 1 = 10 minutes.

Stage 2: Base current Ib2 = 100% of Ir. Time Constant 2 = 10 minutes.

Trip level current Itr = 102% of the base currents.

Assume an overload current of 135% of Ir, equal to 135/90 = 1,5 x Ib1 and 135/100 = 1,35x Ib2

The operate time from cold load is for stage 1:

$$t = 10 \times \ln \frac{1,5^2}{1,5^2 - 1,02^2} = 6,2min$$

and for stage 2:

$$t = 10 \times \ln \frac{1,35^2}{1,35^2 - 1,02^2} = 8,5min$$

The value of the “preheat current” Ip must, when inserted into the above formula, be expressed as a per unit value of the base current of the actual stage.

Fig. 44 shows the current/time characteristics for currents up to 8 times the set base current when the trip current level is set to Itr = 101%.

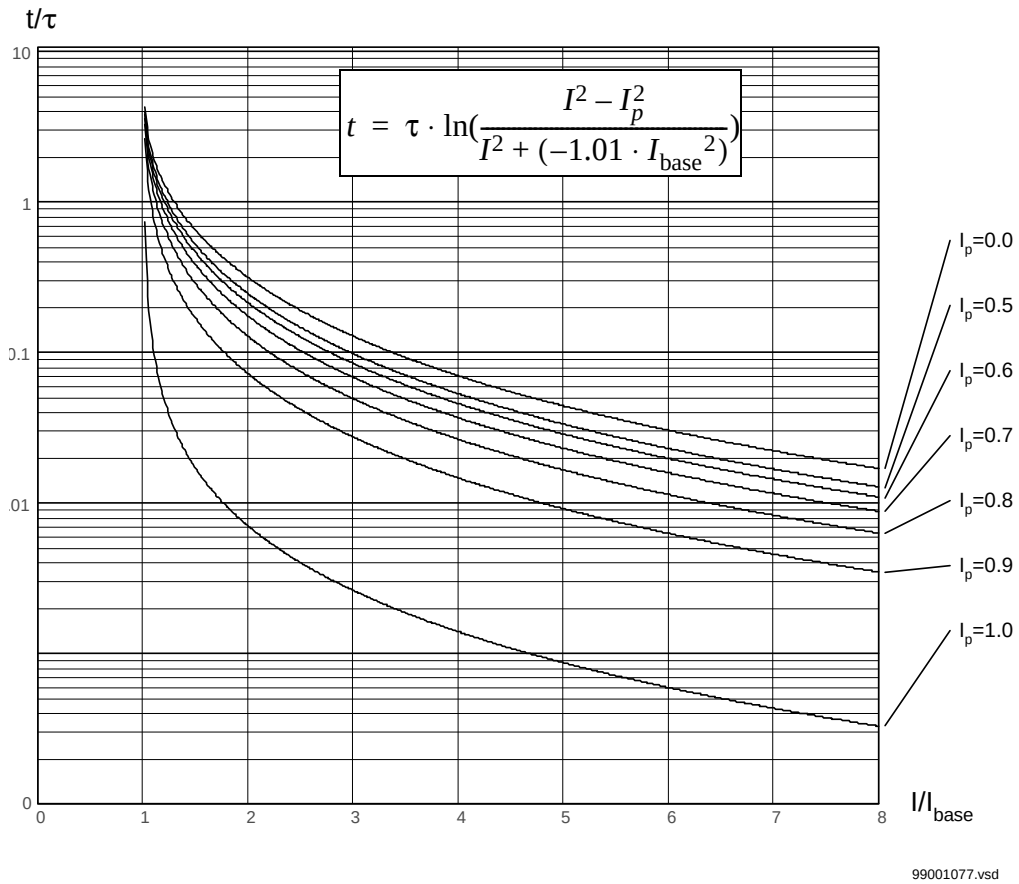

Fig. 44

Some times the time-current capability curve of the object is given instead of the thermal time constant. The time constant can then be determined using the time curves in Fig. 44. Assume, e.g. that the permissible time for 2 times rated current starting from no load is 3 minutes. From Fig. 44 it is seen that this point corresponds to 0,3 T if Itr = 101% of base current. Hence, T is equal to 3 min/ 0,3 = 10 minutes. If the permissible time is 0,5 min at 5 times rated current, this corresponds to 0,04 T. Hence, the time constant will be 0,5 / 0,04 = 12,5 minutes.

If different values are calculated for different points on the time-current capability curve, the shortest calculated time constant should be used for the thermal function.

The influence of the Itr setting on the operate time is moderate. Settings Itr = 101% gives operate time 6,0 minutes for stage 1 instead of 6,2 minutes with setting Itr = 102% according to Example 1 above.

21 Overexcitation protection (OVEX)

21.1 General

When the laminated core of a power transformer is subjected to a magnetic flux density beyond the design limits, stray flux will flow into non-laminated components not designed to carry flux and cause eddy currents to flow. The eddy currents can cause excessive heating and severe damage to the insulation in adjacent parts in a relatively short time.

The general equation for the induced rms voltage in a coil:

$$E = 4,44 \times f \times A \times N \times B_{\max}$$

where:

- f = frequency (Hz)
- A = cross-sectional area of the core (square meters)
- N = number of winding turns
- B_{max} = peak value of flux density (Tesla)

can be written B_{max} = K x E / f, where K is a constant

Hence, the flux density is proportional to the ratio between the voltage and the frequency.

Overvoltage, or underfrequency, or a combination of both, will result in an excessive flux density level, which is denominated overfluxing or over-excitation.

The overexcitation capability curve is influenced by the design of the object and it is generally different for generators and transformers.

According to the IEC standards, the power transformers shall be capable to deliver rated load current continuously at an applied voltage of 105% of rated value (at rated frequency). For special cases, the purchaser may specify that the transformer shall be capable to operate continuously at an applied voltage 110% of rated value at no load, reduced to 105% at rated secondary load current.

According to ANSI/IEEE standards, the transformers shall be capable to deliver rated load current continuously at an output voltage of 105% of rated value (at rated frequency) and operate continuously with output voltage equal to 110% of rated value at no load.

The capability of a transformer (or generator) to withstand overexcitation can be given in the form of a thermal capability curve, i.e. a diagram which shows the permissible time as a function of the level of over-excitation.

When the transformer is loaded, the induced voltage and hence the flux density in the core can not be read off directly from the transformer terminal voltage. Normally, the leakage reactance of each separate winding is not known and the flux density in the transformer core can then not be calculated.

In two-winding transformers, the low voltage winding is normally placed close to the core and the voltage across this winding gives a good representation of the flux density in the core. However, depending on the design, the flux flowing in the yoke may be critical for the overfluxing capability of the transformer.

For power transformers with fixed direction of the load flow, the voltage to the V/Hz protection function should therefore be taken from the feeder side.

Heat accumulated in critical parts during a period of overexcitation will be reduced gradually when the excitation retains the normal value. If a new period of overexcitation occurs after a short time interval, the heating will start from a higher level. The overexcitation protection function should therefore have a thermal memory. In RET 521, the cooling time constant is settable within a wide range.

The general experience is that the overexcitation characteristics for a number of power transformers are not in accordance with standard inverse time curves. In order to make optimal settings possible, a transformer adapted characteristic is available in RET521. The operate characteristic of the protection function can be set to correspond quite well with any characteristic by setting the operate time for six different figures of overexcitation in the range from 100% to 180% of rated V/Hz.

21.2 Measured quantities

The V/Hz function can be configured to any single-phase or three-phase voltage input and any three-phase current input. It uses the fundamental frequency component of current and voltages.

When configured to a single phase-to-phase voltage input, a single-phase current is calculated which has the same phase angle relative the phase-to-phase voltage as the phase currents have relative the phase voltages in a symmetrical system.

The function should in the first place be configured to a three-phase voltage input if available. It then uses the positive sequence quantities of voltages and currents.

It should be noted that analogue measurements should not be taken from any winding where OLTC is located

21.3 Fault conditions

The greatest risk for overexcitation exists in a thermal power station when the generator-transformer block is disconnected from the rest of the network. Overexcitation can occur during start-up and shut-down of the generator if the field current is not properly adjusted. Loss-of load or load-shedding can also result in overexcitation if the voltage control is not functioning properly.

Loss of load or load-shedding at a transformer substation can result in overexcitation if the voltage control is insufficient or out of order.

Low frequency in a system isolated from the main network can result in overexcitation if the voltage regulating system maintains normal voltage.

21.4 Settings

Sufficient information about the overexcitation capability of the protected object(s) must be available when making the settings. The most complete information is given in an overexcitation capability diagram like Fig. 45.

The settings Emax and Emaxcount are made in per unit of the rated voltage of the transformer winding at rated frequency.

21.4.1 Setting example

Set the transformer adapted curve for a transformer with over-excitation characteristics in according to Fig. 45.

Emaxcont for the protection is set equal to the permissible continuos overexcitation acc. to Fig. 45= 105%.When the overexcitation is equal to Emaxcount, tripping is obtained after a time equal to the setting of t1.

When the overexcitation is equal to the set value of Emax, tripping is obtained after a time equal to the setting of t6. A suitable setting would be Emax=140% and t6=4 s.

The interval between Emax and Ecountmax is automatically divided up in five equal steps, and the time delays t2 to t5 will be allocated to these values of overexcitation. In this example, each step will be (140-105) /5=7%. The setting of time delays t1 to t6 ar listed in the table below.

Table 19: Settings

U/f op (%)	Timer	Time set (s)
105	t1	7 200 (max)
112	t2	600
119	t3	60
126	t4	20
133	t5	8
140	t6	4

Information on the cooling time constant T_{cool} should be collected from the power transformer manufacturer.

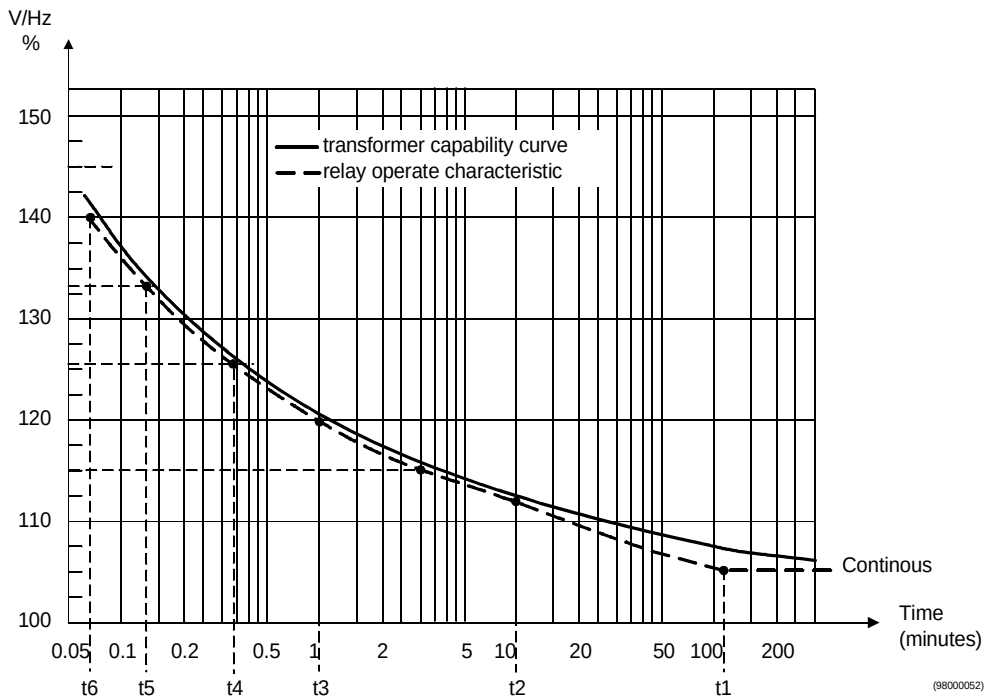

Fig. 45 Example on overexcitation capability curve and V/Hz protection settings for power transformer

22 Frequency Protection Function (FRF)

Over/under frequency protection can be used for several power system protection and control applications. Two examples are underfrequency load shedding and power generation unit protection.

In RET 521 up to three FRF modules can be ordered. Each module has one overfrequency and one underfrequency stage with independently settable frequency pickup and definite time delay.

22.1 General

Frequency relays are used whenever deviations from nominal system frequency need to be detected. Frequency deviations can be harmful to connected objects, such as generators and motors, or when abnormal frequency creates inconvenience for power consumers and may cause failures of electrical apparatuses. Frequency relays are also used where detection of high or low frequency indicates system abnormalities, such as faults in speed regulation units or system overload. Underfrequency relays should be considered for applications where the detection of under-speed conditions for synchronous motors and condensers is required. On lines where reclosing of the source breaker is utilized, damage to large synchronous motors can be avoided by disconnecting the motors from the system. Likewise, disconnection of synchronous condensers can be initiated upon loss of power supply. The overfrequency relay is generally utilized for the protection of ac machines from possible damage due to over-speed conditions. These conditions can occur, for example, on machines with no mechanical governor or on those with the machine shaft linked to a prime mover or to another machine, either one of which could accelerate the combination to a hazardous overspeed condition (e.g. a hydro generator).

Protection of generating units

Different types of power generating units have different capability to withstand network frequency deviations from the rated power system frequency (i.e. 50Hz or 60Hz). High frequency can be the consequence of unintentional disconnection of the generator from the grid while the primary mechanical power is not cut off. Another reason for high frequency can be separation of the power system where one part of the system, where the generator is connected, has excessive generation capacity resulting in high network frequency in this network island. Low frequency can be the consequence of separation of the power system where the part of the system, connecting the generator to be protected, has a lack of active power generation.

Hydro power plants are normally very robust with a capability to withstand significant frequency deviations. There are however events when the detection of overfrequency is essential in order to avoid damages on the generator and the turbine. This can be the case if the generator is unintentionally disconnected from the grid, without shutting down the hydro primary power. In case of overfrequency the mechanical primary hydro-power must be forced down to zero as rapidly as possible. In the contrary the thermal power plants must normally be operated within quite a narrow frequency band around network rated frequency. In case of high or low frequency there is a risk of damages to the steam turbine, due to vibrations.

In the case of a severe power system disturbance there can be significant changes of the voltage and/or frequency. If there is a total or partial collapse of the system, it is of great value if the thermal generating units can transfer to household operation. This will enable a quick re-establishment of the power system, as the generating units can be producing power to the network without any long delay. If the generating unit fail to transfer to household operation, their starting time can be very long (several hours). To enable the transition to household operation, during the event of a power system collapse, it is important to have a well coordinated frequency protection of the generating unit. This means that the unit shall be disconnected from the external network before the trip of equipment within the plant. At the same time it is of value to keep the generator connected to the system as long as possible to, in order to avoid total power system collapse. As we cannot predict the voltage and frequency during all possible events, we cannot guarantee that even a well coordinated protection will give successful transition to household operation. It is however of great importance to have frequency relays with good performance for such applications.

Underfrequency load shedding application

Most power systems are designed to withstand the loss of a single generating unit. During such “normal” disturbances the spinning active reserve, in the power system, is activated. The network frequency will be regulated back to an acceptable value. Simultaneous loss of several power system components, as a result of a more severe disturbance, may cause a severe deficit in active and reactive power. Such infrequent events may cause severe drop in system frequency. The spinning power reserve, in the power system, is normally not sufficient to restore acceptable network frequency, after such a severe disturbances. Other additional actions must be activated. Such activations are:

- Underfrequency controlled load shedding
- Trip of load with low priority
- Activation of HVDC emergency power

This is only of interest if the HVDC link is connected to another power system. All these actions are normally initiated from detection of low frequency. An underfrequency relay can be used for this detection and initiations of different kinds of protective actions. Frequency relays for HVDC emergency power activation, load shedding and power generator islanding must operate correctly even if the voltage magnitude decays rapidly at the same time as the system frequency decays.

Complete load shedding and load restoration schemes have been developed using several different frequency set points and time delays. They are typically a customer specific applications designed in accordance with the power system requirements. However, in general, higher requirements are imposed on accuracy of setting and frequency measuring capabilities in load-shedding and load restoration applications than in rotating machine protection applications.

Industrial application

Another over/under frequency application is typical to large industrial plants which might have some local generation. Normally, the industry depends on a tie line with a utility for some portion of their power needs. If the tie breaker at the utility end should open, the generator in the plant would be overloaded, especially if it also tries to pick up utility load on the tie line. The overload then causes an underfrequency condition on the industrial system.The underfrequency protection can be used to open the tie to the utility system and disconnect nonessential load. Essential loads can then be maintained to the limit of the generator capability. In local, independent power producer network applications, a typical protection scheme may include a two-step frequency relay with one underfrequency and one overfrequency function. Another protection (i.e. TOV/TUV function modules) can provide an undervoltage and an overvoltage function.

22.2 Measured Quantities

A FRF module obtains the measured frequency value from the FRME function. Therefore the FRF function in itself is just one over-trigger and one under-trigger level with the integrated respective time delays. Please refer to frequency measurement function (i.e. FRME) for more information.

22.3 Settings and configuration

The frequency measurement function is blocked when the measured voltage is less than the 40% of the rated voltage. In order to prevent over/under frequency stages operation during this condition it is advisable to connect FRME/ERROR output to the blocking inputs of FRFn functions in the terminal configuration. The settings limitations for overfrequency or underfrequency stages are:

- the pick-up setting for overfrequency and underfrequency stages can be set between 30Hz and 75Hz in step of 0.001Hz
- the time delay for overfrequency and underfrequency stages can be set between 0s and 300s in step of 0.01s

Overfrequency and underfrequency stages within FRF functions has no hysteresis. However the timing is implemented by integration method. When the frequency is outside the set value the function will start to count up towards the preset delay time. If before the delay time is reached the frequency returns inside the set value, than the FRF function will count down with preset rate. The default reset value rate (i.e.setting parameter “kResetUnder”) is 1.0 for all reset parameters in FRF function, which means that the FRF function will count down by one second, for each second that the frequency was outside set frequency limit during previous start condition. If the reset value rate is set to higher value (i.e. 5.0) it means that the relevan stage will reset five times faster. If in the countrary the reset value rate is set to lower value (i.e. 0.1) it means that the relevan stage will reset ten times slower.

It is as well possible to externally block FRF stage operation via block input in the configuration. Therefore it is possible to prevent operation of individual FRF stages if for example rotating machine has under current condition (i.e. machine not connected to the power system).

Control functions

23 Voltage control for power transformers (VCTR)

23.1 General

When the load in a power network is increased the voltage will decrease and vice versa. To maintain the network voltage at a constant level, power transformers are usually equipped with an on-load tap changer (OLTC). This alters the power transformer ratio in a number of predefined steps and in that way changes the voltage. Each step usually represents a change in voltage of approximately 0.5-1.7%.

The voltage control function (VCTR) is intended for control of power transformers with a motor driven on-load tap changer. The function is designed to regulate the voltage at the secondary side of the power transformer (winding No 2 under settings on the HMI). The control method is based on a step-by-step principle which means that a control pulse, one at a time, will be issued to the tap changer mechanism to move it up or down for one position. The length of the control pulse can be set within a wide range to accommodate different types of tap changer mechanisms. The pulse is generated by the VCTR whenever the measured voltage, for a given time, deviates from the set reference value by more than the preset deadband (i.e. degree of insensitivity). Time delay is used to avoid unnecessary operation during short voltage deviations from the set value.

The VCTR function in RET 521 is designed in such a way that it always issues RAISE command in order to increase the voltage, and LOWER command in order to decrease the voltage.

The VCTR function block can be used in the logic scheme together with AND, OR, Timers, Command block, Event blocks etc.

Parallel control of power transformers with the VCTR function, can be made in three alternative ways:

- Using the single VCTR function together with available configuration logic (i.e. AND gates, OR gates, Timers, Command block, Event blocks etc.) in order to achieve the Master-Follower control scheme for the parallel control of identical power transformers.
- Using the reverse reactance method.
- Using the circulating current method, with terminal-to-terminal communication via the LON bus for parallel control of up to eight power transformers.

23.1.1 Control mode

The control mode of the VCTR can be:

- Manual
- Automatic

The control mode can be changed via the command menu in the built-in HMI when the operation mode is IntMMI or remotely via binary signals connected to the **EXTMAN**, **EXTAUTO** inputs on VCTR function block when the operation mode is ExtMMI.

Commands
VoltageControl
Manual/Auto

The current control mode (Manual/Auto) is retained when the operation mode (IntMMI/ExtMMI) is changed.

23.2 Manual control

In manual control mode it is possible to issue RAISE and LOWER commands to the tap changer locally from the built-in HMI under the menu

Commands
VoltageControl
RaiseVoltage/LowerVoltage

or remotely via binary signals connected to corresponding inputs to the VCTR function block.

It should be noted that the VCTR function still supervises the manual commands in the following way:

- manual RAISE commands are blocked when the busbar voltage exceeds U_{max}
- manual LOWER commands are blocked when the busbar voltage falls to a level between U_{block} and U_{min}
- any manual command is blocked when the primary current exceeds the preset value
- the respective manual command is blocked when the tap changer is in one of the extreme positions

It should be noted that the VCTR function will not automatically regulate the power system voltage while manual control mode is selected.

23.2.1 Selection of control location

Operation mode defines the location from where the tap changer can be manually operated. When operation mode is selected, it is as well important to select manual control mode to enable VCTR function to issue manual commands (see section 23.1.1).

It is possible to have the following human-machine-interfaces (i.e. HMI) and four operation modes (i.e. locations from where tap changer can be manually operated) for VCTR function in RET 521:

1 Internal HMI with operation mode (i.e. operation location)
   - RET 521 built-in HMI

2 External HMI with operation modes (i.e. operation location)
   - Local control panel (usually traditional control panel with selector switches)
   - Station Control (station control system i.e. SCS)
   - Remote Control (SCADA system)

It is possible to chose between Internal HMI and External HMI via one command from RET 521 built-in HMI under the menu

Command
VoltageControl
Int/Ext

When Internal HMI is selected, *only* the built-in HMI can be used for manual RAISE and LOWER commands, i.e. VCTR rejects all “terminal remote” manual commands. On the other hand, when External HMI is selected, the operation mode has to be chosen amongst the three possible options given above.

Normal control philosophy for External HMI is that the control location closer to the tap changer has the higher priority (i.e., local control panel has higher priority than station control etc.), but in RET 521 it is possible to choose between two different control philosophies.

The first possibility is that the external operation mode can be selected to be “with priority”. This means that the signal LOCCMD has higher priority than STACMD, and STACMD has higher priority than the REMCMD signal (see figure 46). In this case, the operation mode is stored in a non-volatile memory to ensure correct function even after a power failure. (Signals connected to REMCMD and STACMD inputs shall be pulses). It should be noted that once the LOCCMD signal is set back to zero, a new pulse is required to STACMD or REMCMD input in order to set the VCTR control back to station or remote level.

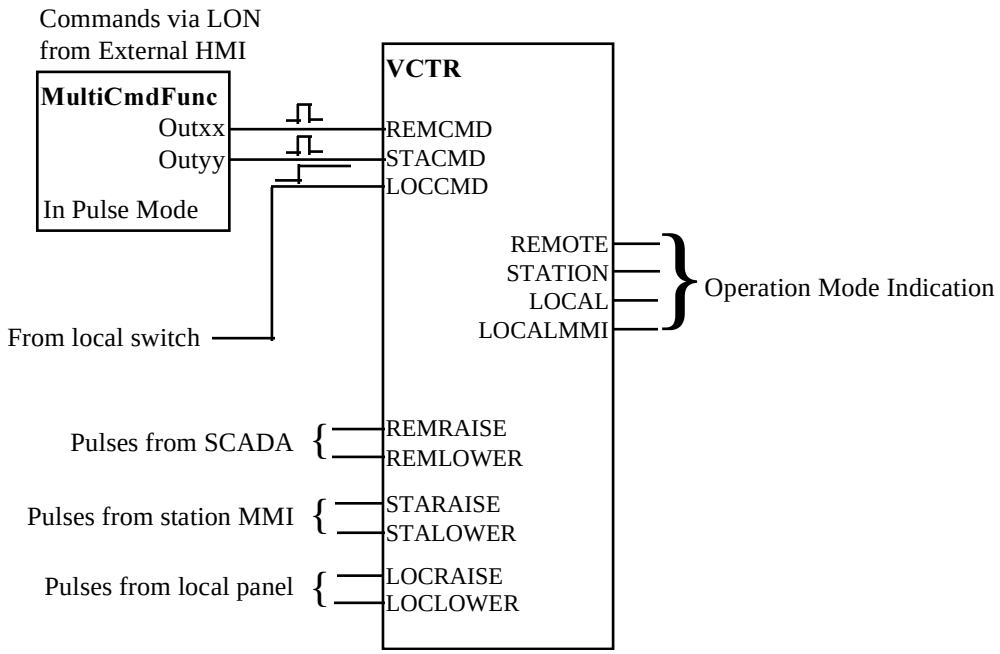

Fig. 46 External HMI Operation Mode selection "with priority"

The second possibility is that the external operation mode can be selected to be "without priority". This means that one or more external HMI can be selected at the same time without any restrictions. In this case signals connected to REMCMD and STACMD inputs shall be steady signals (see figure 47). If all of the inputs REMCMD, STACMD and LOCCMD are set to zero, the REMOTE operation mode is selected as default.

Selection between Priority and NoPriority is made by one of the settings for the VCTR function. This setting can be changed via the built-in HMI or the Parameter Setting Tool (PST) See "SMS" on page 208.

From External HMI, RAISE and LOWER commands are issued to the RET 521 as binary signals via a binary input card or LON communication and command blocks (see figures 46 & 47).

Actual operation mode is indicated by the output binary signals **REMOTE, STATION, LOCAL** and **LOCALMMI** from VCTR function.

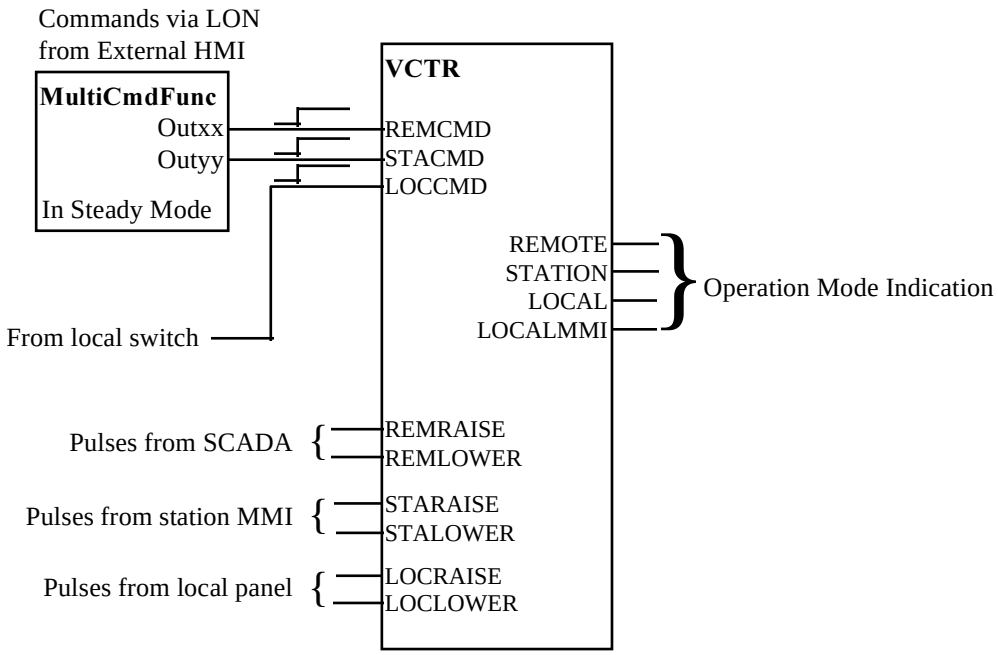

Fig. 47 External HMI Operation Mode selection "without priority"

23.3 Automatic control

In automatic control mode the VCTR function will regulate the voltage according to the active settings and check if any of the blocking conditions are fulfilled. When ordering, it must be specified if the terminal should be equipped with a single transformer automatic control function, or a parallel transformer automatic control function.

23.3.1 Automatic control for a single transformer

The VCTR for single transformer assumes that the configuration consists of one single power transformer, thus any other transformers are not taken into account for automatic control.

23.3.1.1 Measured quantities

The secondary side of the transformer is used as the voltage measuring point. If necessary, the secondary side current is used as load current to calculate the line-voltage drop to the regulation point (see section 23.3.1.4 for more details). It is possible to use one of the following three different sets of analogue input quantities.

1 Three phase-to-earth voltages and all three-phase currents from the power transformer secondary side. In this case the VCTR will use internally calculated positive sequence voltage and current quantities for all calculations.

2 One phase-to-phase voltage and the corresponding two phase currents from the power transformer secondary side.

3 One phase-to-ground voltage and the corresponding phase current from the power transformer secondary side (this option should only be used in solidly earthed systems).

See Figure 48 for more details about different analogue input possibilities.

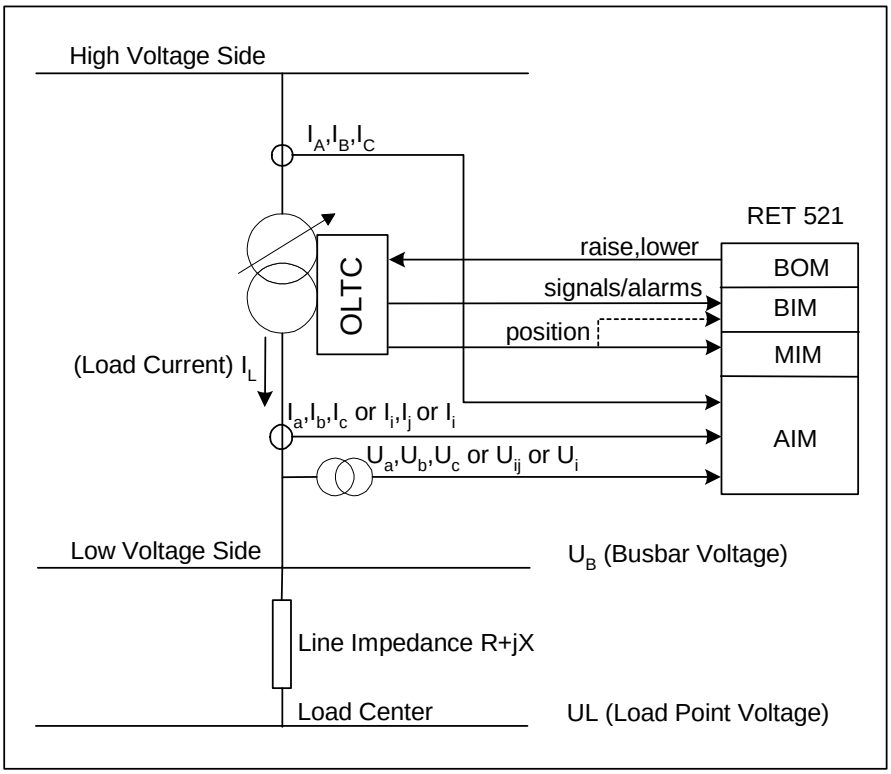

en99001083.vsd

Fig. 48 Signal flow for a single transformer with voltage control function

Which of these three options that will be used, can be selected via the Function Selector for the VCTR function in the CAP configuration tool.

In addition, all three-phase currents from the primary winding (i.e. usually the winding where the tap changer is situated) are used by the VCTR function for overcurrent blocking. These analogue input signals can be shared with other functions in the terminal, such as the differential protection function.

In figure 48, the busbar voltage U_B is a shorter notation for the measured voltage regardless of the type of analogue input. Therefore notation U_B will be used from here on. Similarly notation I_L for load current and U_L for load point voltage will be used in the text to follow.

Other inputs to the VCTR function is the actual position of the tap changer that can be monitored either by using a mA-input or binary inputs. Alarms and signals from the tap changer can also be connected to binary inputs, e.g. thermal overload switch for motor, oil pressure relay, tap changer in progress etc. The RAISE and LOWER commands to the tap changer are issued via two binary outputs that will be activated during a time corresponding to the output pulse duration time.

23.3.1.2 Regulation principle

The VCTR measures the magnitude of the busbar voltage U_B. If no other additional features are enabled (i.e. line voltage drop compensation, control of parallel transformers etc.) this voltage is further used for voltage regulation.

The VCTR function then compares this voltage with the set voltage, U_{set} and decides which action should be taken. To avoid unnecessary switching around the setpoint, a deadband (i.e. degree of insensitivity) is introduced. The deadband is symmetrical around U_{set} (see figure 49). The deadband is arranged in such a way that there is an outer and an inner deadband. Measured voltages outside the outer deadband starts the timer to initiate tap commands, whilst the sequence resets when the measured voltage is once again back inside the inner deadband. One half of the outer deadband will be denoted as ΔU from here on. The setting of ΔU, (i.e. setting parameter "**Udeadband**" in the setting tool under VCTR function) should be set to a value near to the power transformer's tap changer voltage step (typically 75% of the tap changer step).

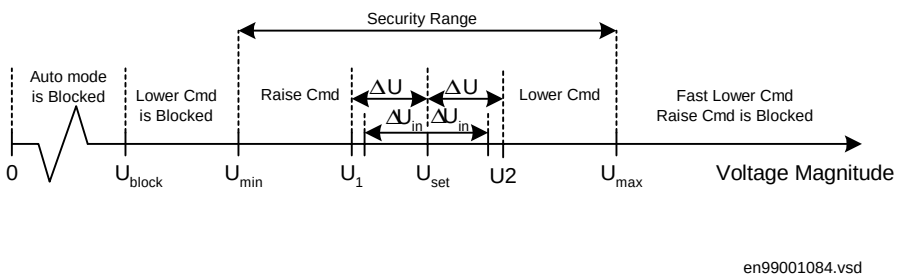

Fig. 49 Voltage Scale

During normal operating conditions the busbar voltage U_B, stays within the outer deadband (i.e. interval between U_1 and U_2 in figure 49). In that case no actions will be taken by the VCTR. However, if U_B becomes smaller then U_1 or larger than U_2, an appropriate lower or raise timer will start. The timer will run as long as the measured voltage stays outside the inner deadband. Two output binary signals (i.e. URAISE and ULOWER) are provided from the VCTR function block indicating that the VCTR has a start condition for its time delays. If this condition persists longer than a preset time by the voltage/time characteristics (see section 23.3.1.3) the appropriate LOWER or RAISE command will be issued. If necessary, the procedure will be repeated until the magnitude of the busbar voltage again falls within the inner deadband. One half of the inner deadband will be denoted as ΔU_{in} from here on. The inner deadband ΔU_{in}, (i.e. parameter **"UdeadbandInner"** in the setting tool under VCTR function) should be set to a value smaller than ΔU. It is recommended to set the inner deadband to 25-70% of the ΔU value.

This way of working is used by the VCTR while the busbar voltage is within the security range [U_{min}, U_{max}]. A situation where U_B falls outside this range will be regarded as an abnormal situation and the following will happen:

When the busbar voltage falls below $\mathbf{U}_{min}$, but still above $\mathbf{U}_{block}$, no further manual or automatic LOWER commands will be executed.

When the busbar voltage falls below the undervoltage limit $\mathbf{U}_{block}$, automatic control will be blocked, but manual commands in both directions can be executed.

If the busbar voltage rises above $\mathbf{U}_{max}$, no further RAISE commands are allowed. In this case the VCTR function can execute one or more fast step down commands (i.e. LOWER commands) in order to bring the voltage back into the security range, [U_{min}, U_{max}]. The fast step down (FSD) function operation can be activated in one of the following three ways: off / auto / auto&manual, according to the setting of "**FSDMode**" parameter. The lower command, in fast step down mode, is always issued with the shortest permissible time delay t_2.

The measured RMS magnitude of the busbar voltage U_B is shown on the HMI as a service value under the menu

Service Report
  Functions
    VoltageControl
      Measurands
        BusbarVoltage

23.3.1.3 Time characteristic

The time characteristic defines the amount of time that should elapse between the moment when measured voltage exceeds the deadband interval until the appropriate RAISE or LOWER command is issued to the tap changer.

The main purpose of the time delay is to prevent unnecessary OLTC operations due to temporary voltage fluctuations. The time delay may also be used for OLTC co-ordination in radial distribution networks in order to decrease the number of unnecessary OLTC operations. This can be done by setting a longer time delay closer to the consumer and shorter time delays higher up in the system.

First time delay, t_1, is used as a time delay (usually long delay) for the first command in one direction. It can have a constant or inverse time characteristic, according to the setting "**t1Use**" (=Const./Inverse). For inverse time characteristics larger voltage deviations from the U_{set} value will result in shorter time delays, limited by the shortest time delay equal to the "**tMin**" setting. This setting should be coordinated with the tap changer mechanism operation time. Constant time delay is independent of the voltage deviation.

The inverse time characteristic for the first time delay follows the formulas:

$$\mathrm{DA} = \left| U_B - U_{\mathrm{set}} \right|$$

$$D = \frac{\mathrm{DA}}{\Delta U}$$

$$t_{1\_\mathrm{delay}} = \frac{t_1}{D}$$

Where:

DA = absolute voltage deviation from the set point

D = relative voltage deviation in respect to set deadband value

For the last equation, the condition $t_{1\_\mathrm{delay}} > t_{min}$ shall also be fulfilled

This practically means that t_{1_delay} will be equal to set t_1 value when absolute voltage deviation DA is equal to ΔU (i.e. relative voltage deviation D is equal to 1). For other values see figure 50. It should be noted that operating times shown in this figure are for 30, 60, 90, 120, 150 & 180 seconds settings for "**t1**" and 10 seconds for "**tMin**".

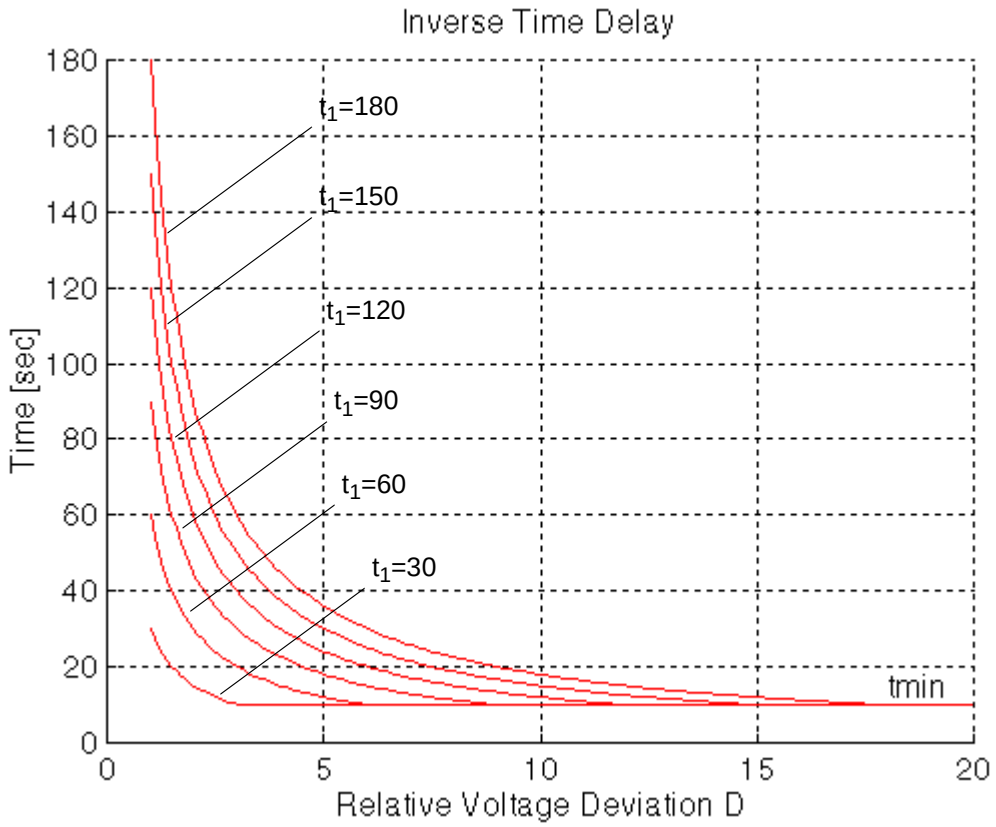

Fig. 50 Inverse time characteristic for VCTR

Second time delay, t_2, will be used for consecutive commands (i.e. command in the same direction as the first command) and for the fast step down function when the busbar voltage exceeds the U_{max} value. It can be constant or inverse according to the setting "**t2Use**" (=Const./Inverse). Inverse time characteristic for the second time delay follows the similar formulas as for the first time delay, but t_2 setting is used instead of t_1.

23.3.1.4 Line voltage drop

The purpose with the line voltage drop compensation is to control the voltage, not at the power transformer low voltage side, but at a point closer to the load point.

Figure 51 shows the vector diagram for a line modeled as a series impedance with the voltage U_B at the LV busbar and voltage U_L at the load center. The load current along the line is I_L, the line resistance and reactance from the station busbar to the load point are R_L and X_L. The angle between the load point voltage and the current, is φ_L. If all these parameters are known U_L can be obtained by simple vectorial calculation.

Values for R_L and X_L are given as settings in primary system ohms. If more than one line is connected to the LV busbar an equivalent impedance should be calculated and given as a parameter setting.

The LDC feature can be turned On/Off by the setting parameter “OperationLDC”. When it is enabled, voltage U_L will be used by the VCTR function for voltage regulation instead of voltage U_B (see section 23.3.1.2). However, the VCTR function will still perform the following two checks:

1 The magnitude of measured busbar voltage U_B, shall be within the security range, [U_{min}, U_{max}]. If the busbar voltage falls-out of this range the LDC calculations will be temporarily stopped until voltage U_B comes back within the range.

2 The magnitude of the calculated voltage U_L at the load point, can be limited such that it is only allowed to be equal to or smaller than the magnitude of U_B, otherwise U_B will be used. However, a situation where U_L>U_B can be caused by a capacitive load condition, and if the wish is to allow for a situation like that, the limitation can be taken away by the setting parameter “**OperCapaLDC**” to on.

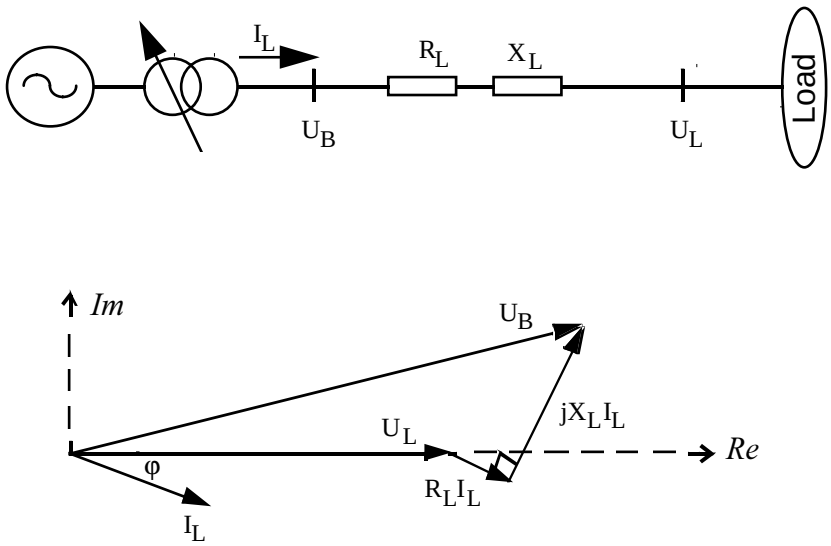

Fig. 51 Vector diagram for line voltage drop compensation

The calculated load voltage U_L is shown on the HMI as a service value under menu

Service Report
Functions
VoltageControl
Measurands
CompVoltage

23.3.1.5 Load voltage adjustment

Due to the fact that most loads are proportional to the square of the voltage, it is possible to provide a way to shed part of the load by decreasing the supply voltage for a couple of percent.

It is possible to do this voltage adjustment in two different ways in RET 521:

1 Automatic load voltage adjustment, proportional to the load current

2 Constant load voltage adjustment with four different preset values.

For the first principle the voltage adjustment is dependent on the load and maximum voltage adjustment should be obtained at rated load of the transformer.

The second principle is a constant voltage adjustment of the setpoint voltage (positive or negative) activated with a binary signal connected to the VCTR function block inputs LVA1, LVA2, LVA3 & LVA4. The corresponding voltage adjustment factors are given as setting parameters **“LVAConst1”**, **“LVAConst2”**, **“LVAConst3”** & **“LVAConst4”**. The VCTR function will accept only one active input at a time, and this is the input that was activated first. Activation of input LVARESET in the VCTR block, brings the voltage setpoint back to U_{set}.

With these factors, VCTR function, in fact, just temporarily adjusts the value of the set voltage U_{set} as per the following formula:

$$U_{\text{set, adjust}} = U_{\text{set}} + S_a \cdot \frac{I_L}{I_{r2}} + S_{\text{ci}}$$

Where the symbols have the following meanings:

$U_{\text{set,adjust}}$	Adjusted set voltage in per unit
U_{set}	Original set voltage: Base quantity is U_{r2}
S_a	Automatic load voltage adjustment factor, VRAuto
I_L	Load current
I_{r2}	Rated current, secondary winding
S_{ci}	Constant load voltage adjust. factor for active input *i* (corresponds to LVAConst1, LVAConst2, LVAConst3 & LVAConst4)

It shall be noted that the adjustment factor is negative in order to decrease the load voltage and positive in order to increase the load voltage. After this calculation $U_{\text{set,adjust}}$ will be used by the VCTR function for voltage regulation instead of the original value U_{set} (see section 23.3.1.2).

The calculated set point voltage $U_{set,adjust}$ is shown on the HMI as a service value under the menu

Service Report
Functions
VoltageControl
Measurands
ActualUsetSngl

The active Constant Load Voltage Adjustment Factor is shown on the HMI as a service value under the menu

Service Report
Functions
VoltageControl
Measurands
LVAInput

23.3.2 Automatic control for parallel transformers

Parallel control of power transformers means control of two or more power transformers connected to the same busbar on the LV side, and in most cases also on the HV side. As was mentioned previously, different methods can be used for parallel control with the RET 521.

23.3.2.1 Parallel control with the Master-Follower Method

This method for parallel control of power transformers is very much similar to the voltage control of a single transformer. One of the transformers is selected to be master, and will regulate the voltage in accordance with the principles described in section 23.3.1. In addition to this, it will issue tap commands (LOWER/RAISE) to the other transformers in the parallel group one by one, after first having issued the proper commands to its own tap changer. The logic for this is arranged by configuration (i.e. AND gates, OR gates, Timers, Command block, Event blocks etc.) with the CAP 540 configuration tool.

The parallel transformers should be identical, and each transformer must be equipped with a RET 521 terminal. Communication between the terminals must exist (LON or galvanic). Apart from the LOWER/RAISE commands sent from the master, the tap positions from the followers should also be communicated back to the master, as it is a requirement that differing tap positions shall be avoided.

23.3.2.2 Parallel control with the Reverse Reactance Method

Consider the two parallel transformers in figure 52. Transformer T1 has higher no load voltage (i.e. higher tap position) and will drive a circulating current which adds to the load current in T1 and subtracts from the load current in T2, changing both amplitude and phase angle of the transformer currents. Increasing load will decrease the busbar voltage at the same time as the difference between the transformer currents will increase. At some stage, the decreased busbar voltage will require a tap RAISE command. As transformer T1 already is in a higher tap position, it must be avoided that T1 taps first. To achieve this, the higher current through T1 can be used to calculate a voltage which is lower than U_B, and let VCTR use this voltage instead of U_B for the regulation. The converse way of reasoning can be applied to T2 which has a decreasing current.

In fact, the method described above, can be achieved by using the same method as for line voltage drop compensation (see section 23.3.1.4). By inserting a negative reactance compensation, an increased current in one transformer will give a decreased voltage U_L, and vice versa.

Line voltage drop compensation and parallel control of power transformers with the reverse reactance method have completely different objectives, although set by the same R_L and X_L parameters. They can be used one without the other or combined. Thus, to apply the reverse reactance method, the LDC function must be activated by setting parameter “OperationLDC” to “On”. When enabled, voltage U_L will be used by VCTR functions for voltage regulations instead of voltage U_B (see sections 23.3.1.2 and 23.3.1.4).

The voltage U_L is shown on the HMI as a service value under the menu

Service Report
- **Functions**
  - **VoltageControl**
    - **Measurands**
      - **CompVoltage**

The calculation of suitable R_L and X_L parameters for reverse reactance compensation must take into account the power factor of the load. This also means that the performance of the method is sensitive to changing power factors.

The reverse reactance method for parallel control, does not require communication between the terminals.

23.3.2.3 Parallel control with the circulating current method

This method requires that each transformer is controlled by a RET 521 terminal with VCTR function for parallel control and that there exists a LON communication link between the terminals.

The same input quantities as for single control will be used for parallel voltage control. However, the measured voltages U_B for the transformers in parallel will be treated in a special way. The RET terminals for the transformers in parallel will exchange their measured U_B values. In each terminal, the mean value of all U_B values will then be calculated, and this value U_{Bmean} will be used in each terminal instead of U_B. The calculated mean busbar voltage U_{Bmean} is shown on the HMI as a service value under the menu

Service Report
Functions
VoltageControl
Measurands
BusVoltParl

The exchange of measured voltages is made on the LON-bus cyclically at a pre-set rate (parameter “**TXINT**”, parameter setting in VCTR Function Block through CAP 540 configuration tool). At the same time, supervision of the VT mismatch is also performed. This works such that, if the measured voltages U_B, differ from U_{Bmean} with more than a preset value (setting parameter “**VTmismatch**”) and for more than a preset time (setting parameter “**tVTmismatch**”), an alarm ("**VTALARM**") will be generated.

This section will describe the parallel control when all RET 521 terminals in the group are in automatic control mode and parallel operation has been configured and selected by the user. Other situations will be discussed later.

Two main objectives of the circulating current method for parallel voltage control are:

1 Regulate the busbar or load voltage to the preset target value.

2 Minimize the circulating current in order to achieve optimal sharing of the reactive load between parallel transformers.

The first objective is the same as for the voltage control of a single transformer while the second objective tries to bring the circulating current, which appears due to unequal LV side no load voltages in each transformer, into an acceptable value. Figure 52 shows an example with two transformers connected in parallel. If transformer T1 on this picture has higher no load voltage it will drive a circulating current which adds to the load current in T1 and subtracts from the load current in T2. It can be shown that the magnitude of the circulating current in this case can be approximately calculated with the following formula:

$$\left|I_{cc\_T1}\right| = \left|I_{cc\_T2}\right| = \left|\frac{U_{T1} - U_{T2}}{Z_{T1} + Z_{T2}}\right|$$

Because a transformer impedance is dominantly inductive, it is possible to use just the transformer reactances in the above formula. At the same time this means that T1 circulating current lags the busbar voltage almost 90°, whilst T2 circulating current leads the busbar voltage by almost 90° (see figure 53 for complete phasor diagram). This also demonstrates that the circulating current is mainly of reactive nature.

Therefore by minimizing the circulating current flow through transformers, the total reactive power flow is optimized as well. In the same time, at this optimum state the apparent power flow is distributed among transformers in the group in proportion to their rated power.

Important for the VCTR function for parallel control is the calculation of the circulating current. To achieve this, certain information and measurements have to be exchanged via the station bus (i.e. LON bus) between the terminals.

It should be noted that the Fourier filters in each RET terminal run asynchronously, which means that current and voltage phasors cannot be exchanged and used for calculation directly between the terminals. In order to “synchronize” measurements within all terminals in the parallel group, a common reference must be chosen. The most suitable reference quantity for all transformers, belonging to the same parallel group, is the busbar voltage. This means that the measured busbar voltage is used as a reference phasor in all terminals, and the position of the current phasors on a complex plane is calculated in respect to it. This is a simple and effective solution, which eliminates any additional need for synchronization between terminals regarding the VCTR function.

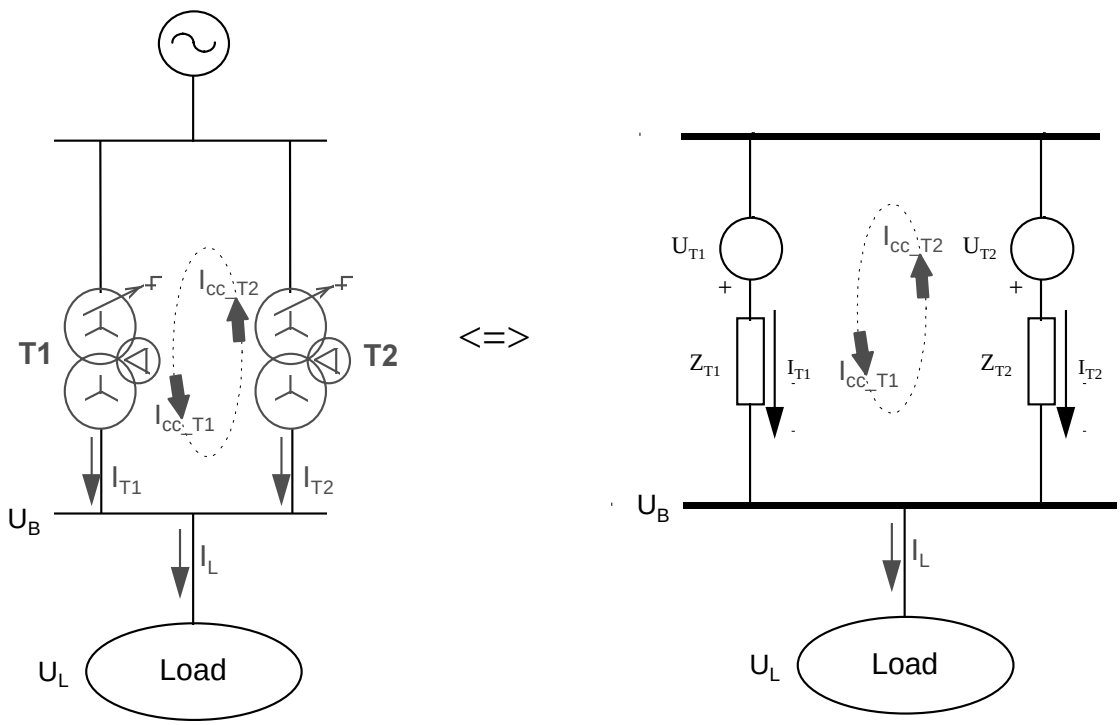

Fig. 52 Parallel group of two power transformers and its electrical model

At each transformer bay, the real and imaginary parts of the current on the secondary side of the transformer are calculated from measured values, and distributed on the station LON bus to the terminals belonging to the same parallel group.

As mentioned before, only the imaginary part (i.e. reactive current component) of the individual transformer current is needed for the circulating current calculations. The real part of the current will, however, be used to calculate the total through load current and will be used for the line voltage drop compensation, (see sections 23.3.1.4 and 23.3.4).

The total load current is defined as the sum of all individual transformer currents:

$$\overline{I_L} = \sum_{i=1}^{k} \overline{I_i}$$

where subscript *i* signifies the transformer bay number and *k* the number of parallel transformers in the group (k ≤ 4). Next step is to extract the circulating current I_{cc_i} that flows in bay *i*. It is possible to identify a term in the bay current which represents the circulating current. The magnitude of the circulating current in bay *i*, I_{cc_i}, can be calculated according to:

$$I_{\mathrm{cc\_i}} = -\mathrm{Im}(\overline{I_i} - \overline{K_i} \times \overline{I_L})$$

where *Im* signifies the imaginary part of the expression in brackets and $\overline{K_i}$ is a constant which depends on the number of transformers in the parallel group and their short-circuit reactances. The VCTR function automatically calculates this constant. Transformer reactances shall be given in primary ohms, calculated from each transformer rating plate.

The minus sign is added in the above equation in order to have positive value of the circulating current for the transformer that generates it.

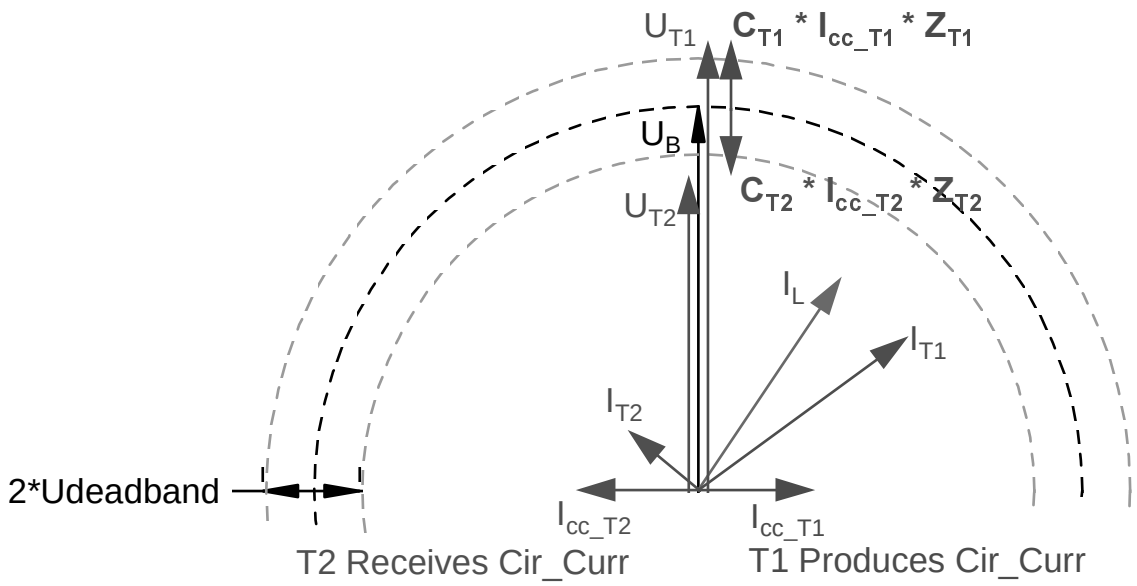

$$\underline{I}_L = \underline{I}_{T1} + \underline{I}_{T2}$$

$$I_{cc\_T1} = Imag\ \{\underline{I}_{T1} - (Z_{T2}/(Z_{T1}+Z_{T2})) * \underline{I}_L\}$$

$$I_{cc\_T2} = Imag\ \{\underline{I}_{T2} - (Z_{T1}/(Z_{T1}+Z_{T2})) * \underline{I}_L\}$$

Fig. 53 Vector Diagram for two power transformers working in parallel.

In this way each VCTR function calculates the circulating current of its own bay.

The calculated circulating current I_{cc_i} is shown in the HMI as a service value under menu

Service Report
Functions
VoltageControl
Measurands
CircCurrent

Sign is available as well (i.e. + sign means that the transformer produces circulating current and - sign means that the transformer receives circulating current).

Now it is necessary to estimate the value of the no-load voltage in each transformer. To do that the magnitude of the circulating current, in each bay, is first transferred to a voltage deviation, U_{di}, as per the following formula:

$$U_{\mathrm{di}} = C_i \cdot I_{\mathrm{cc\_i}} \cdot X_i$$

where X_i is the short-circuit reactance for transformer *i* and C_i, is a setting parameter called "**Comp**" which can increase/decrease the influence of the circulating current on the VCTR function. It should be noted that U_{di} will have positive values for transformers that produce circulating current and negative values for transformers that receive circulating current.

Now for each transformer the magnitude of the no-load voltage can be approximated with:

$$U_i = U_{Bmean} + U_{\mathrm{di}}$$

This value for the no-load voltage is then simply put into the voltage control function for single transformer, that treats it as the measured busbar voltage, and further control actions are taken as described in section 23.3.1. By doing this, the overall control strategy is simple and can be summarized as follows.

For the transformer producing/receiving the circulating current, calculated no-load voltage will be greater/lower than measured voltage U_{Bmean}. This calculated no-load voltage is thereafter compared with the set voltage U_{set}. A steady deviation which is outside the outer deadband will result in a LOWER / RAISE voltage command to the tap changer. In this way the overall control action will always be correct since the position of a tap changer is directly proportional to the transformer no-load voltage. The sequence resets when U_{Bmean} is inside the inner deadband at the same time as the calculated no-load voltages for all transformers in the parallel group are inside the outer deadband.

Complete phasor diagram for the case with two transformers connected in parallel, is shown in figure 53.

In parallel operation with the circulating current method, different U_{set} values for individual transformers can cause the voltage regulation to be unstable. For this reason, the mean value of U_{set} for parallel operating transformers can be automatically calculated and used for the voltage regulation. This is set On/Off by setting parameter "**OperUsetPar**". The calculated mean **Uset** value is shown on the HMI as a service value under the menu

Service Report
Functions
VoltageControl
Measurands
ActualUsetParl

The use of mean **Uset** is recommended for parallel operation with the circulating current method, specially in cases when Load Voltage Adjustment is also used.

Avoidance of simultaneous tapping

For some types of tap changers, especially older designs, an unexpected interruption of the auxiliary voltage in the middle of a tap manoeuvre, can jam the tap changer. In order not to expose more than one tap changer at a time, simultaneous tapping of parallel transformers (regulated with the circulating current method) can be avoided. This is done by setting parameter "**OperSimTap**" to "On". Simultaneous tapping is then avoided at the same time as tapping actions (in the long term) are distributed evenly amongst the parallel transformers.

The algorithm in RET 521 will select the transformer with the greatest voltage deviation U_{di} to tap first. That transformer will then start timing, and the output **TIMERON** on the VCTR function block will be activated. After time delay t1 the appropriate RAISE or LOWER command will then be issued. If now further tapping is required to bring the busbar voltage inside deadband 2, the process will be repeated, and the transformer with the then greatest value of U_{di} amongst the remaining transformers in the group will tap after a further time delay t2, and so on. This is made possible as the calculation of I_{cc} is updated every time the measured values are exchanged on the LON bus between the RET terminals. If two transformers have equal magnitude of U_{di} then there is a predetermined order governing which one is going to tap first.

23.3.2.4 Homing

This function can be used with parallel operation of power transformers using the circulating current method. It makes possible to keep a transformer energized from the HV side, but open on the LV side (hot stand-by), to follow the voltage regulation of loaded parallel transformers, and thus be on a proper tap position when the LV circuit breaker is closed.

For this function, it is needed to have the LV VTs for each transformer on the cable (tail) side (not the busbar side) of the CB, and to have the LV CB position hardwired to the RET terminal.

In the RET 521 terminal, the state "Homing" will be defined as the situation when the transformer has information that it belongs to a parallel group (e.g. information on **T1INCLD=1** or **T2INCLD**=1 ...etc.), at the same time as the binary input “**DISC**” on the VCTR block is activated by open LV CB. If now setting parameter "**Homing** = On" for that terminal, the terminal will act in the following way:

- The algorithm calculates the “true” busbar voltage, by averaging the voltage measurements of the other transformers included in the parallel group (voltage measurement of the “disconnected transformer” itself is not considered in the calculation).
- The value of this true busbar voltage is used in the same way as U_{set} (see section 23.3.1.2) for control of a single transformer. The “disconnected transformer” will then automatically issue RAISE or LOWER commands (with appropriate t1 or t2 time delay) in order to keep the LV side of the transformer within the deadband of the busbar voltage.

23.3.3 Substation topology logic

The switchyard topology (connections between transformers) within a parallel group is crucial for the parallel control module when the circulating current method is used. This information is used by the VCTR functions in order to incorporate those transformers that are in the parallel group in the calculations. When a transformer is disconnected, e.g. T3 in figure 54, and the corresponding signal is connected to the VCTR function of transformer T3, it will notify the other two parallel control modules (T1 and T2) in the group by sending a “DISC=1” message to the T1 and T2 terminals (see section 23.3.6 for more details).

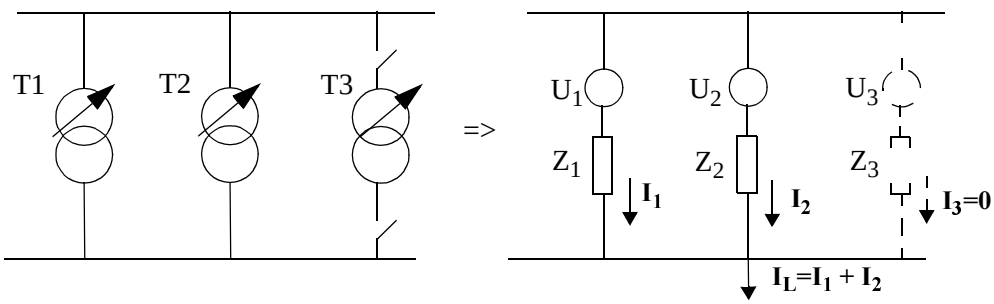

Fig. 54 Disconnection of one transformer in a parallel group.

However, this information might not be enough when the switchyard is complex (e.g. double busbar on one or both sides of the transformer, bus section and bus coupler bays etc.). For these cases the user has to engineer station topology specific logic which will decide which transformers belong to the parallel group(s). For this purpose the VCTR function block is fitted with eight binary inputs signals (**T1INCLD**,..., **T8INCLD**) which should be used to indicate which transformers are included in the parallel group. This information has to be passed to all group members. The user is free to connect any signal to these inputs.

In case of very complex substations, when the configuration logics available within RET 521 is not enough, one solution can be to use an external control terminal type REC 561 which produces/calculates necessary signals (**T1INCLD**,..., **T8INCLD & DISC**) for all RET 521 terminals working in the parallel group. All information necessary can be exchanged via the LON bus between RET 521 terminals and REC 561 terminal.

The VCTR function block is also fitted with eight outputs (**T1PG**,..., **T8PG**) for indication of the actual composition of the parallel group that it itself is part of. If parallel operation mode has been selected in the terminal with **TRFID**=Tx, the TxPG signal will always be set to 1.

The parallel module will consider communication messages only from the voltage control functions working in parallel (i.e. according to the current station configuration). When the parallel voltage control module detects that no other transformers work in parallel it will behave as a single voltage control module in automatic mode.

23.3.4 Line voltage drop compensation for parallel control

The line voltage drop compensation for single transformer is described in section 23.3.1.4. The same principle is used for parallel control with the circulating current method except that total load current, I_L, is used in the calculation instead of the individual transformer current. See Fig. 52 for details. The same values for "**Rline**" and "**Xline**" parameters should be given in all terminals. There is no automatic change of these parameters due to change in the substation topology, thus they should be changed manually if needed.

23.3.5 Communication between terminals

Communication between different parallel voltage control modules is managed by the station bus, LON. A special network variable, that is adapted for the parallel voltage control, is implemented in the RET terminal. The variable is updated in the receiver terminal, by cyclic sending of data from the source terminal under normal operation. However, when some important changes are detected by the VCTR function in the source terminal the message will be sent immediately.

The configuration parameter "**TXINT**", on the VCTR function block, specifies the period of time between two sendings of data. There is a corresponding parameter, "**RXINT**", that specifies the maximum time between two updates of data from other terminals. If the updated message is not received within the time determined by parameter "**RXINT**" the communication error is set.

The communication configuration can be divided in two parts:

- Configuration of the voltage control parallel module
- Configuration of the LON Network

The parallel modules have to have unique identities in order to simplify the network configuration and the functional overview. This identity concerns **exclusively** the parallel voltage control (with the circulating current method). For RET 521 these identifiers are predefined as T1, T2, T3,..., & T8 (i.e. transformers 1 to 8). In figure 54 there are three RET terminals with the parameter "**TRFID**" set to T1, T2 and T3, respectively. The identity will follow the information if, e.g., the SEND-block in T1 is connected to T1Recv in terminal T2 and T3. Enabling receive blocks for each terminal in the parallel group is done with the parameters **T1RXOP**=Off/On,..., **T8RXOP**=Off/On. Settings in the three terminals, shown in figure 54, should be:

Table 20: Identification example for RET terminals (as supposed in Fig. 54)

TRFID= T1	T1RXOP =Off	T2RXOP =On	T3RXOP =On	T4RXOP =Off	T5RXOP =Off	T6RXOP =Off	T7RXOP =Off	T8RXOP =Off
TRFID= T2	T1RXOP =On	T2RXOP =Off	T3RXOP =On	T4RXOP =Off	T5RXOP =Off	T6RXOP =Off	T7RXOP =Off	T8RXOP =Off
TRFID= T3	T1RXOP =On	T2RXOP =On	T3RXOP =Off	T4RXOP =Off	T5RXOP =Off	T6RXOP =Off	T7RXOP =Off	T8RXOP =Off

It should be noted that it is absolutely necessary to set this parameter to off for the "own" terminal.(i.e. for transformer with identity T1 parameter T1RXOP must be set to off etc.).

The LON network is configured by using the LNT 505 LON Configuration Tool where variable bindings between the terminals are specified and connected.

The parallel operation must be activated by setting the parameter "OperationPAR" before the VCTR function sends any data on the LON bus. Figure 55 shows the LON connections for the parallel group of three transformers from figure 54.

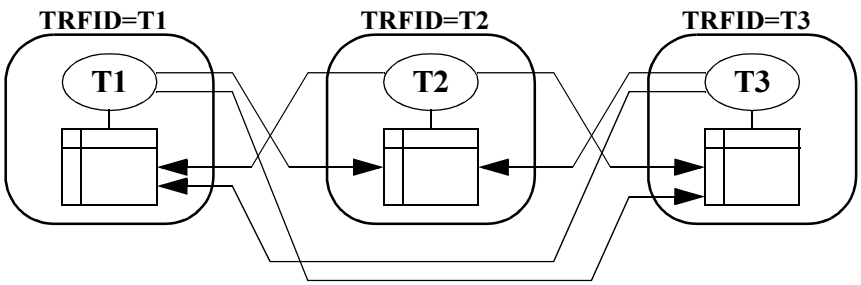

Fig. 55 LON network connections between terminals in the parallel group.

23.3.6 Exchanged information

The information exchanged between the modules can be expressed as a *data set*. All data in the data set will be updated at the same time broadcast which guarantees data consistency. Each data set has its own database object in the terminal database which accomplish the connection between the network and the code.

The status of **TxRXOP** (=Off/On) decides whether the data set should be supervised by the receive time interval parameter or not. The data set contains the following items, where Tx is the Terminal no. x:

Table 21: Exchanged data set

NAME	COMMENT
CMODE	= 1, Tx's control mode is automatic, = 0, Tx's control mode is manual.
MBLK	= 1, Tx's VCTR module is blocked, = 0, Tx's VCTR module is not blocked.
TXID	Terminal identification (T1,..., T8)
DISC	= 1, Tx is disconnected from busbar and/or does not participate in the parallel group, = 0, Tx is connected to busbar **and** is a member of the parallel group.
ILOADRE	Tx's load current, real part value.
ILOADIM	Tx's load current, imaginary part value.
TIMERON	Tx's timeron value. Output to be set when either t1 or t2 timers are running.
UBUS	Tx's BusbarVoltage
USET	Tx's AcutalUsetSngl value
MASTER	= 1, Tx is Master. (future use) = 0, Tx is Slave.
SLAVE	Select slave to receive message. (future use)
TCPOS	Tx's tap changer position. (future use)
RAISE	= 1, Tx issues a raise command, (future use) = 0, no command.
LOWER	= 1, Tx issues a lower command. (future use) = 0, no command.

Note: The data set cannot be modified by the user.

23.4 Manual control of a parallel group (adapt mode)

In the previous section automatic control of a parallel group using the circulating current method was described. In manual control mode for parallel transformers (using circulating current method) the operator can choose to operate each tap changer individually. Each terminal control mode must then be set to “Manual”.

It is also possible to control the transformers as a group. The control mode for one terminal is then set to “Manual” whereas other terminals are left in “Automatic”. Terminals in the automatic mode will be automatically put in the adapt mode. As the name indicates they will be ready to adapt to the manual tapping of the selected transformer. The VCTR function in manual mode will send the adapt message via the LON bus to the rest of the group. It is of no importance for the group members to know from which transformer bay the adapt message was sent.

The VCTR function in adapt mode will continue the calculation of U_{di}, but instead of adding U_{di} to the measured busbar voltage, it will compare it with the deadband ΔU. The following rules are used:

Rule 1: If U_{di} is positive and its modulus is greater than ΔU, then initiate a LOWER command. Tapping will then take place after appropriate t1/t2 timing.

Rule 2: If U_{di} is negative and its modulus is greater than ΔU, then initiate a RAISE command. Tapping will then take place after appropriate t1/t2 timing.

Rule 3: If U_{di} modulus is smaller than ΔU, then do nothing.

The binary output signal “**ADAPT”** on the VCTR function block will be set high to indicate that this terminal is adapting to another RET terminal in the parallel group.

However, it should be noted that correct behavior of all transformers in the parallel group can be guaranteed only when one and only one of the transformers is set to the manual mode.

23.5 Blocking conditions

The purpose of blocking is to prevent the tap changer from operating under conditions that can damage the tap changer, or exceed other power system related limits.

For VCTR function three types of blocking are defined:

- *Total block*
- *Partial block*
- *Automatic block*

The following is an overview of all blocking conditions sorted under the above defined blocking types.The actual blocking condition (i.e. None, Total, Automatic, Partial) is shown on the HMI as a service value under the menu

Service Report
Functions
VoltageControl
Measurands
BlockCond

23.5.1 Total block

Total block prevents any tap changer operation independent of the control mode (auto or man). The following conditions will cause the total block.

Table 22: Total block conditions

Overcurrent (IBLK) (Temporary blocking)	When any one of the three HV currents exceed the preset value, the VCTR function will be temporarily totally blocked. The outputs **IBLK** and **TOTBLK** will be set.
Total block via settings (TOT-BLK) (Manual reset)	VCTR function can be totally blocked via setting parameter “**TotalBlock**”, which can be changed from the HMI or PST. The output **TOTBLK** will be set.
Total block via configuration (TOTBLK) (Manual deblocking)	Voltage control function can be totally blocked via any binary signal connected in the CAP 540 configuration tool to the binary input **ETOTBLK** on the VCTR function block. The output **TOTBLK** will be set.
Analog input error (Manual correction needed)	Binary output signal **ERROR** from the VCTR function indicates a configuration error of the analogue channels, that is, if the connection is missing according to the selected VCTR function block type. This error is considered as a fatal error and results in total block of the VCTR function. This error can be reset by downloading a correct configuration from the CAP 540 configuration tool.
Tap changer error (TCERR) (Manual deblocking by auto/ man sequence) See also point 23.5.6	If the **TCINPROG** input of VCTR, is connected from the tap changer mechanism for supervision the VCTR operation is controlled from this input. If the TCINPROG signal will appear undue the VCTR output **TCERR** is shown and VCTR function is totally blocked and **TOTBLK** is shown as well. For proper operation the TCINPROG shall appear during the RAISE/LOWER output pulse and disappear before the tTCTimeout time has elapsed.

23.5.2 Partial block

Partial block prevents operation of the tap changer only in one direction (i.e. only RAISE or LOWER command is blocked) in manual and automatic control mode. The following conditions will cause the partial block.

Table 23: Partial block conditions

Maximum voltage limit (UMAX) (Limitation in one direction)	If the busbar voltage U_B (not the compensated load point voltage U_L) exceeds U_{max} (see figure 49), further RAISE commands will be blocked and, if allowed by settings, a fast step down action will be performed in order to re-enter the permitted range $U_{min} < U_B < U_{max}$. The Fast Step down function is blocked when the lowest voltage tap position is reached. The output **UMAX** will be set.
Minimum voltage limit (UMIN) (Limitation in one direction)	If the busbar voltage U_B (not the calculated load point voltage U_L) is between U_{block} and U_{min} level (see figure 49), further LOWER commands will be blocked independent of the control mode. The output **UMIN** will be set.
Extreme tap changer positions (LOPOS or HIPOS) (Limitation in one direction)	This blocking function supervises the extreme positions of the tap changer according to the setting parameters “**LowVoltTap**” and “**HighVoltTap**”. When the tap changer reaches one of these two positions further commands in the corresponding direction will be blocked. The output **LOPOS** or **HIPOS** will be set.

23.5.3 Automatic mode block

Automatic block prevents automatic voltage regulation, but the tap changer can still be controlled manually. The following conditions will cause the automatic block.

Table 24: Automatic mode block conditions

Automatic block via settings (AUTOBLK) (Manual deblocking)	Automatic operation of VCTR function can be blocked via setting parameter “**AutoBlock**”, which can be changed from the HMI or PST. The output **AUTOBLK** will be set.
Automatic block via configuration (AUTOBLK) (Manual deblocking)	Automatic operation of voltage control function can be blocked via any binary signal connected in the configuration to binary input **EAUTOBLK** on the VCTR function block. The output **AUTOBLK** will be set.

Table 24: Automatic mode block conditions (Continued)

Undervoltage (UBLK) (Temporary blocking)	If the busbar voltage U_B falls below U_{block} the automatic voltage control is blocked. Operations in manual mode is not blocked under these circumstances because it usually corresponds to a disconnected power transformer. This allows the tap changer to be operated before reconnecting the power transformer. The outputs **UBLK** and **AUTOBLK** will be set.
Command error (CMDERR) (Needs manual deblocking)	Typical operating time of the tap changer mechanism is around 3-8 seconds. Therefore, the function should wait for a position change before a new command is issued. The command error signal, **CMDERR**, will be set if the tap changer position does not change one step in correct direction within the time given in the parameter "**tTCTimeout**". The tap changer module will then indicate the error until a successful command has been carried out. As well, this error condition can be reset by changing control mode of the VCTR function to Manual and then back to Automatic. The outputs **CMDERR** and **AUTOBLK** will be set. For additional information see Section 23.6.3.
Position indication error (POSERR) (Needs manual deblocking)	Two types of errors can occur: • the input hardware module failure (BIM/IOM or MIM) • the input signal itself is corrupted Supervision of the input hardware module is provided by connecting the corresponding error signal to the **INERR** input (input module error) on the VCTR function block. Supervision of the input signal for binary converter is provided by its output signal CNV-ERROR which takes care of both the parity check and binary input module error. Supervision of the input signal for MIM can be done in the standard way. For example, the measurement range can be supervised by setting the MIM parameters **I_Max** and **I_Min** to desired values, e.g., I_Max = 20mA and I_Min = 4mA. Signals will be generated if these values are exceeded. The VCTR automatic control will be blocked if position indication error is detected. This error condition can be reset by changing control mode of the VCTR function to Manual and then back to Automatic. The outputs **POSERR** and **AUTOBLK** will be set.

Table 24: Automatic mode block conditions (Continued)

Disconnected transformer (TFRDISC) (Temporary deblocking)	When the transformer has been disconnected from LV busbars, the tap changer automatic control can be blocked. The binary input signal **DISC** into the VCTR function should be set to one to indicate that the transformer is disconnected. The outputs **TFR-DISC** and **AUTOBLK** will be set. Blocking will be removed when the transformer is reconnected (i.e. input signal set back to zero).
Reversed Action (REVACBLK) (Temporary blocking)	The risk of voltage instability increases as transmission lines become more heavily loaded in an attempt to maximize the efficient use of existing generation and transmission facilities. In the same time lack of reactive power may move the operation point of the power network to the lower part of the P-V-curve (unstable part). Under these conditions, when the voltage starts to drop, it might happen that a RAISE command can give reversed result i.e. a lower busbar voltage. Tap changer operation under voltage instability conditions makes it more difficult for the power system to recover. Therefore, it might be desirable to block the VCTR function temporarily. Requirements for this blocking are: • The load current must exceed **95**% of Irated. • After a RAISE command, measured busbar voltage has lower value than its previous value • The second requirement has to be fulfilled for two consecutive RAISE commands If all three requirements are fulfilled, VCTR automatic control will be blocked for a period of time given by the setting parameter “**tREVACT**” and the output signal **REVACBLK** will be set. The reversed action feature can be turned off/on with the setting parameter “**OperationRA**”.

23.5.4 Automatic blocking in parallel mode

Automatic block prevents automatic voltage regulation, but the tap changer can still be controlled manually. There are two additional automatic blocking conditions for parallel voltage control:

Table 25: Parallel blocking conditions

Communication error (COMMERR) (Automatic deblocking)	If the LON communication from any one of the terminals in the group fails it will cause the automatic block in all VCTR functions which belong to that parallel group (see section 23.5 for more details).This error condition will be reset automatically when the communication is re-established. The outputs **COMMERR** and **AUTOBLK** will be set.
Circulating current (ICIRC) (automatic deblocking)	When the magnitude of the circulating current exceeds the preset value (setting parameter **“CircCurrLimit”**) for longer time than the set time delay (setting parameter **“tIcircBlock”**) it will cause the auto block condition of the VCTR function. The user can enable this feature via On/Off setting parameter **“OperationCC”** from the HMI or PST. This error condition will be reset automatically when the circulating current decreases below the preset value. This usually can be achieved by manual control of the tap changers. The outputs **ICIRC** and **AUTOBLK** will be set.

23.5.5 Mutual blocking

When one voltage control module blocks its operation, all other voltage control modules working in parallel with that module, should block their operation as well. To achieve this the affected VCTR function broadcasts a mutual block to other group members via the LON communication. When mutual block is received from any of the group members, automatic VCTR operation is blocked in the receiving terminal, i.e. all units of the parallel group.

The following conditions in any one of the terminals in the group will cause mutual blocking:

- Over-Current
- Total block via settings
- Total block via configuration
- Analogue input error
- Automatic block via settings
- Automatic block via configuration
- Under-Voltage
- Command error

- Position indication error
- Reversed Action
- Circulating current
- Communication error

It should be noted that partial blocking condition in any one of the terminals will not cause the mutual blocking (see section 23.5.2 for more details).

The terminal which is the “source” of the mutual blocking will set its AUTOBLK output as well as the output which corresponds to the actual blocking condition (e.g. IBLK for over-current). The other terminals which receive mutual block will only set its AUTOBLK output.

The mutual blocking persists until the terminal that dispatched the block signal cancels it. Another way to release the mutual blocking is to force the terminal which caused mutual blocking to *Single mode* operation. This is done by setting the binary input SNGLMODE on the VCTR function to high or setting the parameter “OperationPAR” to off from the built-in HMI or PST.

The VCTR function can be forced to single mode at any time.It will then behave exactly the same way as described in section 23.3.1, except that LON communication messages are still sent and received, but the received messages are ignored. The terminal is at the same time also automatically excluded from the parallel group.

23.5.6 Autoblock, total block and mutual block disconnection possibilities

When the VCTR is connected to read back information (tap position value and tap changer in progress signal) for cooperation it may sometimes be difficult to find timing data to be set in VCTR for proper operation. Especially at commissioning of eg older transformers the sensors can be worn and may be the contacts are bouncing etc. Before the right timing data is set it may then happen that the VCTR becames totally blocked or blocked in auto mode due to incorrect setting and frequently has to be manually reset before the exact reason is concluded. In this case it can be better if the blocking by uncertain monitoring signals can be disconnected until the commissioning of all main items are OK and working as espected.

The influence from the tap changer in progress signal (TCIP) can be excluded simply by disconnection of the signal or by blocking its way by other means in eg the CAP configuration.

IF the LowVoltTap or HighVoltTap parameter is set equal to zero, which is a specifically handled case, the position error and/or the command error will only set their alarm outputs POSERR and CMDERR. No autoblock or mutual block is achieved any longer. The VCTR can therefore continue to operate during such conditions and only give warnings. Why the warnings are coming might then be much easier to investigate.

If the LowVoltTap or HighVoltTap parameter is set to zero the value of lowest (or highest) position is kept to one.

23.6 Tap changer monitoring

The VCTR function has built-in extensive supervisory and monitoring features which are explained further in more details.

23.6.1 Tap changer position detection

Actual tap changer position can be measured via binary signals (BI) or by an analogue signal (AI). The configuration parameter "**POSTYPE**" on the VCTR function block shall be correspondingly set to "None", "BI" or "AI". When the tap changer position indication is not available the POSTYPE parameter shall be set to "None".

Measured tap changer position is shown on the HMI as a service value under the menu

Service Report
Functions
VoltageControl
Measurands
TapPosition

23.6.2 Tap changer extreme positions

This feature supervises the extreme positions of the tap changer according to the settings "**HighVoltTap**" and "**LowVoltTap**". When the tap changer reaches its highest/ lowest position, corresponding RAISE/ LOWER command is prevented in both automatic and manual mode.

23.6.3 Monitoring of tap changer operation

Output signal **RAISE** or **LOWER** are set high when VCTR function has decided that it is necessary to operate the tap changer. These outputs should be connected to a binary output module, BOM in order to give the commands to the tap changer mechanism. The length of the output pulse can be set via the setting parameter "**tPulseDur**".

Usually the tap changer mechanism can give a signal, "Tap change in progress", when they are busy. This signal from the tap changer mechanism can be connected via a BIM card to the VCTR input **TCINPROG**. This signal is used by the VCTR function in three ways.

The first use is to reset the VCTR signal **TCOPER** to low as soon as the tapchanger is ready after a tapchange and the **TCINPROG** disappears. Then VCTR is immediately ready to eg make a consecutive command if necessary. If the **TCINPROG** input signal is not used or does not exist, the **TCOPER** signal will be set for a time, equal to **tTC-Timeout** setting, every time when a RAISE/LOWER command is issued.

The second use is to detect a jammed tap changer. A delay-on-pick-up timer is activated (set time equal to "**tTCTimeout**" setting) while the **TCINPROG** signal is active. If this timer times out before the TCINPROG signal is set back to zero the output signal **TCERR** is set high and the VCTR function is blocked.

The third use is to check the proper operation of the tap changer mechanism. As soon as input signal **TCINPROG** is set back to zero the VCTR function expects to read a new and correct value for the tap position. If this does not happen the output signal **CMDERR** is set high and VCTR function is blocked.

This feature can sometimes cause some practical problems at site during commissioning which can be solved by introducing delay on drop-off timer in the configuration (set from 1 to 3 seconds) between binary input for the tap changer in progress signal and the VCTR input **TCINPROG**. This time should be considered when setting tTC-timeout. It is also important to time the reading of the mA inputs so that a newly measured tap position reaches the VCTR within the period of which TCINPROG is set. This can be obtained by setting a 2 s interval (approximately) periodic reading of the mA input and/or enable deadband supervision.

Both the MIM input 1 (MI11-) and the CNV (primary counter) function blocks are fitted with a delay parameter input. The value applied (e.g. 1 s) will also add up to the total delay that must be covered by the TCINPROG signal. The delay parameter input of the MIM and CNV function blocks is meant to avoid fluctuations of the tap position to be transferred into the VCTR function.

This additional logical timer in the configuration will as well enable the VCTR function to detect run-away of the tap changer mechanism.

23.6.4 Hunting detection

Hunting detection is provided in order to generate an alarm when the voltage control gives an abnormal number of commands or abnormal sequence of commands within a pre-defined period of time.

There are two hunting functions:

1 The VCTR function will activate the output signal **HUNTING** when the number of tap changer operations exceed the number given by the setting “**DayHuntDetect**” during 24 hours, or by the setting “**HourHuntDetect**” during one hour.

2 The VCTR function will activate the output signal **WINHUNT** when the total number of contradictory tap changer operations (i.e. RAISE, LOWER, RAISE, LOWER etc.) exceed the pre-set value given by the setting **“NoOpWindow“** within the time window specified via the setting parameter **“tHuntDetect”**.

Hunting can be the result of a narrow deadband setting or some other abnormalities in the control system. Hunting detection according to 1 is active in both manual and automatic control mode whereas hunting detection according to 2 only is active in automatic control mode.

23.6.5 Wearing of the tap changer contacts

Two counters, **“ContactLife”** and **“NoOfOperations”** are available within the VCTR function. They can be used as a guide for maintenance of the tap changer mechanism.

The “ContactLife” counter represents the remaining number of operations (decremental counter) at rated load

$$\text{ContactLife}_{n+1} = \text{ContactLife}_{n} - \left(\frac{I_{load}}{I_{rated}}\right)^{\alpha}$$

where n is the number of operations and α is an adjustable setting parameter, **“CLFactor”**, with default value is set to 2. With this default setting an operation at rated load (current measured on primary side) decrements the ContactLife counter for one.

The “**NoOfOperations**” counter simply counts the total number of operations (incremental counter).

Both counters are stored in a non-volatile memory as well as the times and dates of their last reset. These dates are stored automatically when the command to reset the counter is issued. It is therefore necessary to check that the terminal internal time is correct before these counters are reset. The counter value can be reset from the HMI menu branch:

Commands
  VoltageControl
    CLReset
    or...

    OCReset

Both counters and their last reset dates are shown on the HMI as a service values under the menu

Service Report
  Functions
    VoltageControl
      Measurands
        NoOfOperations/OCResetDate
      or...

        ContactLife/CLResetDate

23.7 Power Monitoring

The level (with sign) of active and reactive power flow, through the transformer, can be monitored. This function can be utilised for different purposes, e.g. to block the voltage control function when active power is flowing from the LV side to the HV side or to initiate switching of reactive power compensation plant etc.

There are four setting parameters “**Pforw, Prev, Qforw** and **Qrev”**. When passing the pre-set value, anyone of them alone (via an or-gate) will activate the output “**POWERMON**” in the VCTR function block. This function can be time delayed, and in that way, passing the pre-set level of one of them can be indicated, if the rest of the parameters are set on the extreme high values.

The setting ranges for the power levels are from -9999,99 to +9999,99 Mw/MVAr. This makes it possible to combine the settings in such a way that a level of one of them is monitored as described above. It is also posssible to cover intervals as well as areas in the P-Q plane.

The power monitoring function works in both single and parallel operating versions of VCTR.

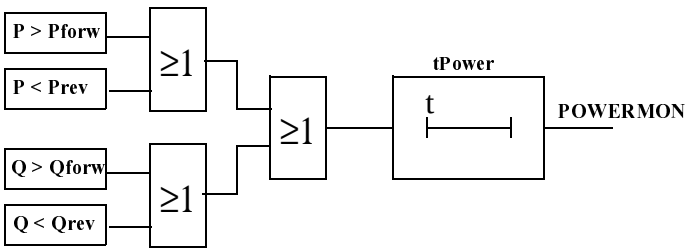

Fig. 56 Logic diagram for power monitoring function

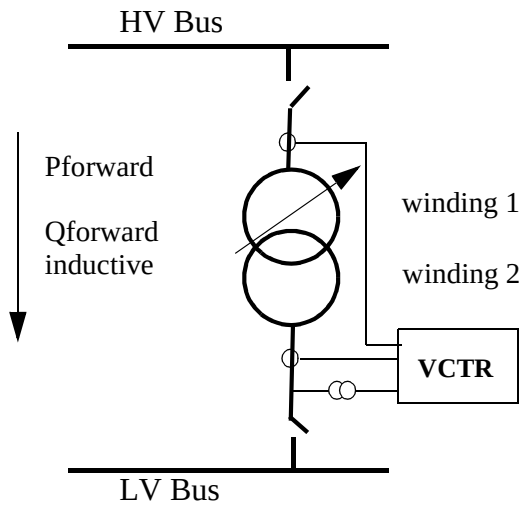

Fig. 57 Referense diagram for positive power direction

The active power P has positive value when power flow from the winding No 2 to the network as shown in the figure. The reactive power Q has positive value when the total load of the secondary winding is inductive (i.e. reactance) as shown on the figure.

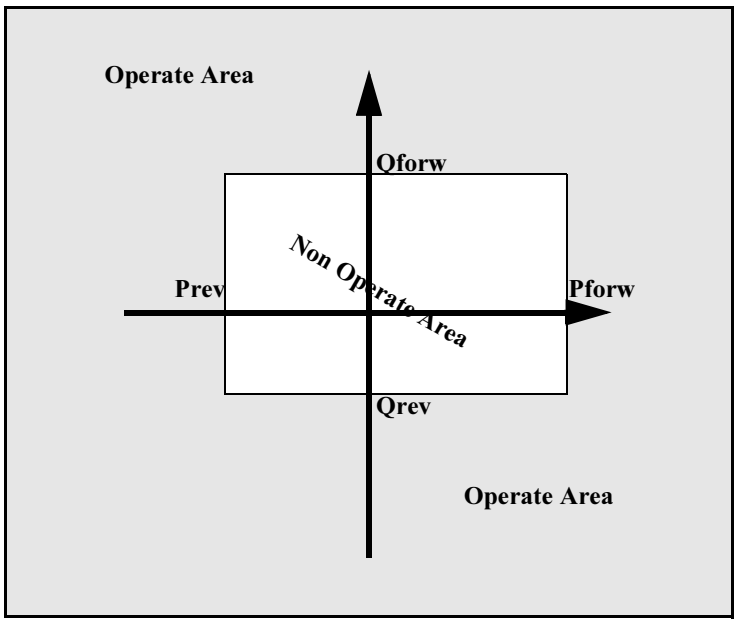

Fig. 58 Operate characteristic for power monitoring function

23.8 Settings

When parallel operation with the circulating current method is used, a setting value for the "**Comp**" parameter shall be calculated (see section 23.3.2.3). This parameter is used to increase or decrease the influence of the circulating current on the VCTR function.

Consider the two parallel transformers T1 and T2 in figure 52. If their taps differ with one position and we denote the corresponding no-load voltage difference U_{tap_1} (line voltage), the circulating current can be calculated as:

$$\left|I_{\text{cc\_tap\_1}}\right| = \left|\frac{U_{\text{tap\_1}}}{\sqrt{3} \times (X_{T1} + X_{T2})}\right|$$

Comp for transformer *i* (C_i in %) can be calculated in the following way:

$$C_i = \frac{\Delta U \times \left|Ur2 \cdot 10^3\right| / \sqrt{3}}{n \times \left|I_{\text{cc\_tap\_1}}\right| \times \left|X_{Ti}\right|}$$

where:

- Ur2 is the rated phase to phase voltage for winding 2 (in kV).
- ΔU is the deadband setting in percent.
- *n* denotes the desired number of difference in tap position, between the transformers, that shall give a voltage deviation U_{di} which corresponds to the deadband setting.

This calculation yields a setting of Comp that will always initiate an action (start timer) when the transformers have n tap positions difference. Of course the number n can also be chosen a non integer which then gives a possibility to tune the voltage regulation.

If the two transformers are equal, the formula can be simplified:

$$C_i = \frac{2 \times \Delta U}{n \times p} \times 100$$

where *p* is the tap step (in % of transformer nominal voltage).

For more than two transformers in parallel, the simplified formula for the two-transformer case will still be valid if the transformers are equal with similar tap changers. In other cases, the first of the two formulas given above shall be used.

Please note that the above C_i setting is the theoretical value where the operation in the most unfavorable condition is achieved exactly on the deadband limit. In practice the transformer reactances changes from rated value at the ends of the regulation range. Therefore it is recommended to have a margin (increase C_i setting) with about 25 to 30% from the theoretical value.

Monitoring

24 LED indication function (HL, HLED)

24.1 Application

The LED indication module is an additional feature for the REx 500 terminals for protection and control and consists totally of 18 LEDs (Light Emitting Diodes). It is located on the front of the protection and control terminal. The main purpose is, to present on site an immediate visual information on:

- actual signals active (or not active) within the protected bay (terminal).
- alarm signals handled as a simplified alarm system.
- last operation of the terminal. Here we understand the presentation of the signals appeared during the latest start(s) or trip(s) since the previous information has been reset.

The user of this information is the technician in substation or the protection engineer during the testing activities. The protection engineer can also be able to read the status of all LEDs over the SMS in his office as well as to acknowledge/reset them locally or remotely.

24.2 Functionality

Each LED indication can be set individually to operate in six different sequences; two as follow type and four as latch type. Two of the latching types are intended to be used as a protection indication system, either in collecting or re-starting mode, with reset functionality. The other two are intended to be used as a signaling system in collecting mode with an acknowledgment functionality.

Priority

Each LED can show green, yellow or red light, each with its own activation input. If more than one input is activated at the time a priority is used with green as lowest priority and red as the highest.

Operating modes

Collecting mode

LEDs which are used in collecting mode of operation are accumulated continuously until the unit is acknowledged manually. This mode is suitable when the LEDs are used as a simplified alarm system.

Re-starting mode

In the re-starting mode of operation each new start resets all previous active LEDs and activates only those which appear during one disturbance. Only LEDs defined for re-starting mode with the latched sequence type 6 (LatchedReset-S) will initiate a reset and a restart at a new disturbance. A disturbance is defined to end a settable time after the reset of the activated input signals or when the maximum time limit has been elapsed.

Acknowledgment/reset

From local HMI

The active indications can be acknowledged/reset manually. Manual acknowledgment and manual reset have the same meaning and is a common signal for all the operating sequences and LEDs. The function is positive edge triggered, not level triggered. The acknowledgment/reset is performed via the C-button on the Local HMI according to the sequence in figure 59.

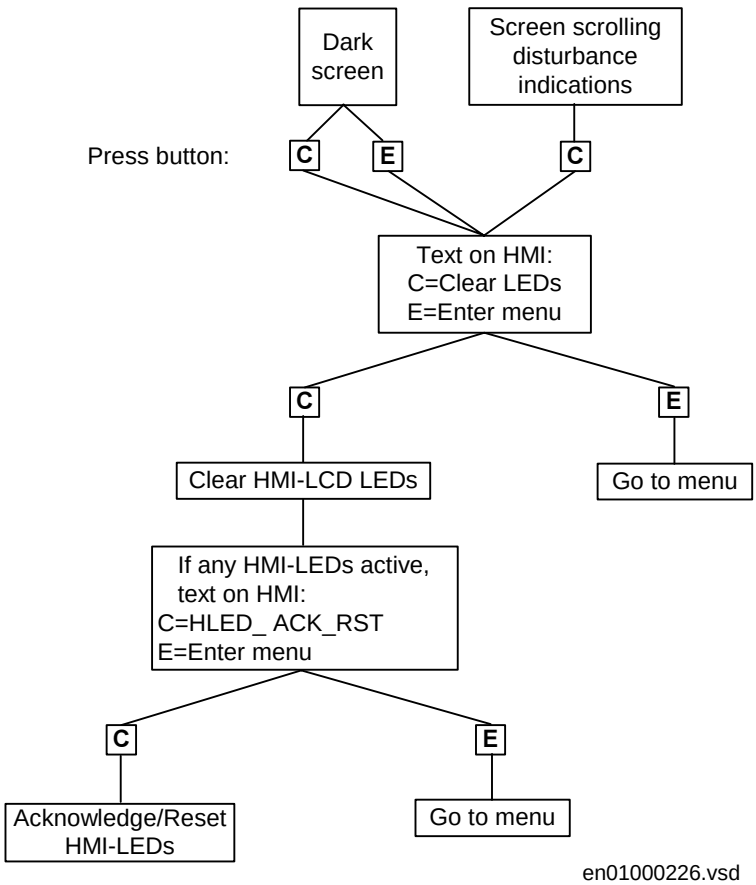

Fig. 59 Acknowledgment/reset from local HMI

From function input

The active indications can also be acknowledged/reset from an input (ACK_RST) to the function. This input can for example be configured to a binary input operated from an external push button. The function is positive edge triggered, not level triggered. This means that even if the button is continuously pressed, the acknowledgment/reset only affects indications active at the moment when the button is first pressed.

From SMS/SCS

It is also possible to perform the acknowledgment/reset remotely from SMS/SCS. To do that, the function input (ACK_RST) has to be configured to an output of a command function block (CD or CM). The output from these command function blocks can then be activated from the SMS/SCS.

Automatic reset

The automatic reset can only be performed for indications defined for re-starting mode with the latched sequence type 6 (LatchedReset-S). When the automatic reset of the LEDs has been performed, still persisting indications will be indicated with a steady light.

Operating sequences

The sequences can be of type Follow or Latched. For the Follow type the LED follow the input signal completely. For the Latched type each LED latches to the corresponding input signal until it is reset.

The figures below show the function of available sequences selectable for each LED separately. For sequence 1 and 2 (Follow type), the acknowledgment/reset function is not applicable. Sequence 3 and 4 (Latched type with acknowledgement) are only working in collecting mode. Sequence 5 is working according to Latched type and collecting mode while sequence 6 is working according to Latched type and re-starting mode. The letters S and F in the sequence names have the meaning S = Steady and F = Flash.

At the activation of the input signal, the indication obtains corresponding color corresponding to the activated input and operates according to the selected sequence diagrams below.

In the sequence diagrams the LEDs have the following characteristics:

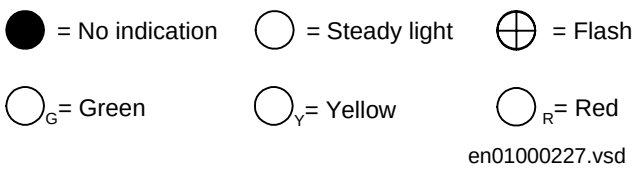

Fig. 60 Symbols used in the sequence diagrams

Sequence 1 (Follow-S)

This sequence follows all the time, with a steady light, the corresponding input signals. It does not react on acknowledgment or reset. Every LED is independent of the other LEDs in its operation.

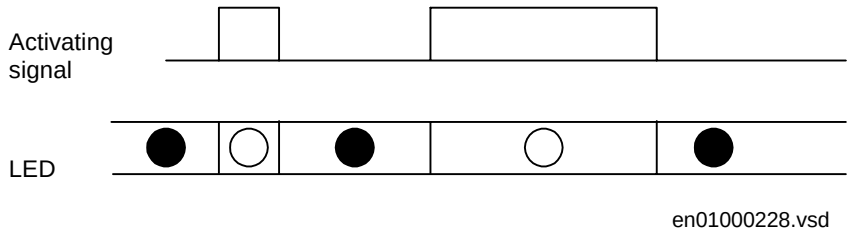

Fig. 61 Operating sequence 1 (Follow-S)

If inputs for two or more colors are active at the same time to one LED the priority is as described above. An example of the operation when two colors are activated in parallel is shown in figure 62.

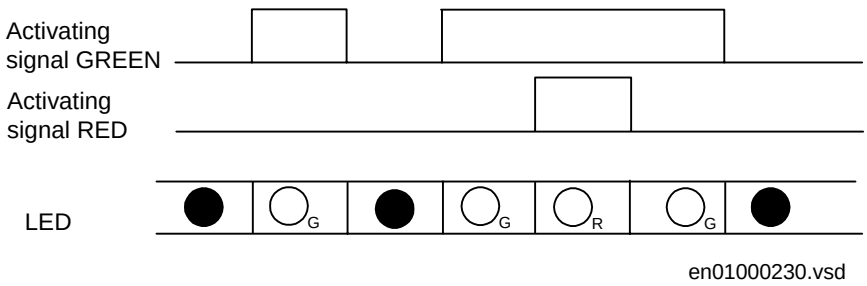

Fig. 62 Operating sequence 1, two colors

Sequence 2 (Follow-F)

This sequence is the same as sequence 1, Follow-S, but the LEDs are flashing instead of showing steady light.

Sequence 3 (LatchedAck-F-S)

This sequence has a latched function and works in collecting mode. Every LED is independent of the other LEDs in its operation. At the activation of the input signal, the indication starts flashing. After acknowledgment the indication disappears if the signal is not present any more. If the signal is still present after acknowledgment it gets a steady light.

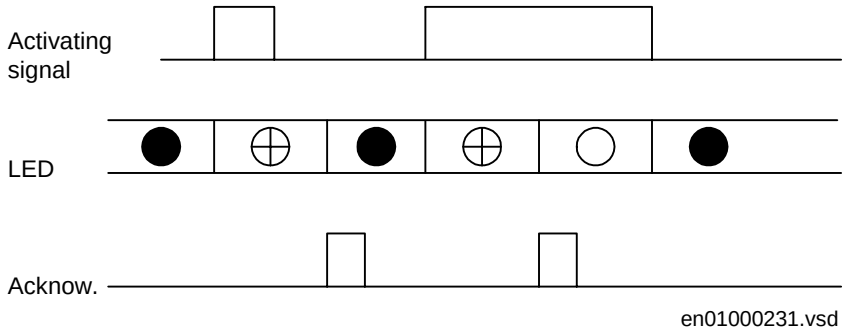

Fig. 63 Operating sequence 3 (LatchedAck-F-S)

When an acknowledgment is performed, all indications that appear before the indication with higher priority has been reset, will be acknowledged, independent of if the low priority indication appeared before or after acknowledgment. In figure 64 is shown the sequence when a signal of lower priority becomes activated after acknowledgment has been performed on a higher priority signal. The low priority signal will be shown as acknowledged when the high priority signal resets.

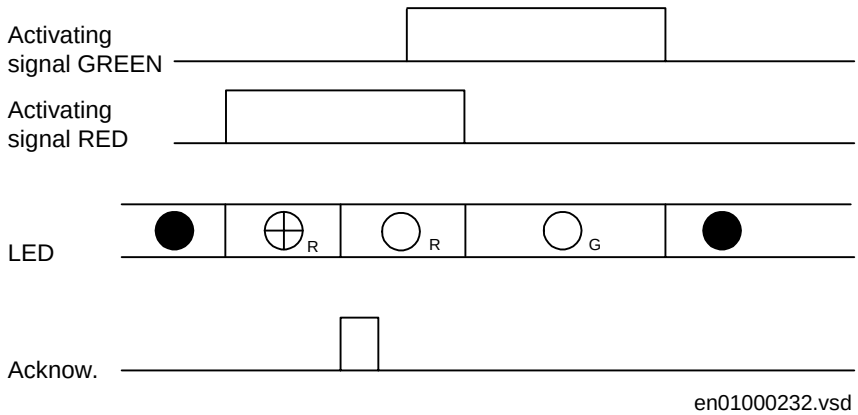

Fig. 64 Operating sequence 3, two colors involved

If all three signals are activated the order of priority is still maintained. Acknowledgment of indications with higher priority will acknowledge also low priority indications which are not visible according to figure 65.

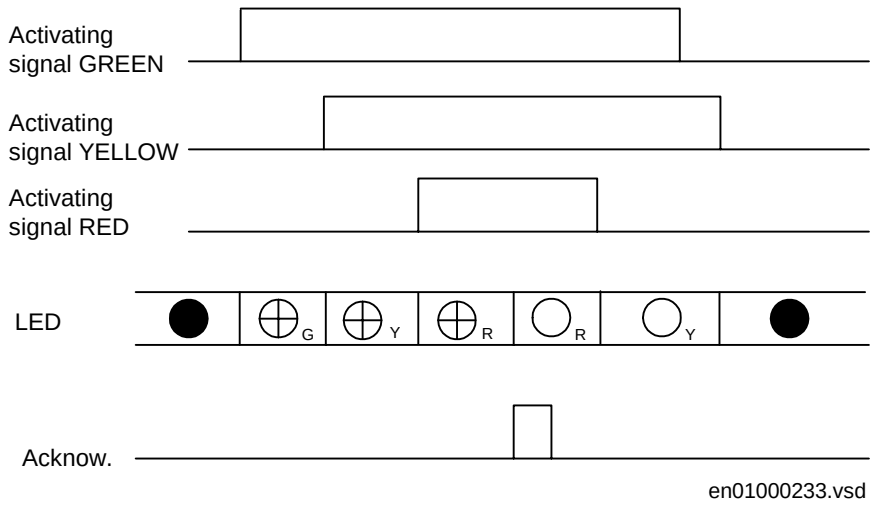

Fig. 65 Operating sequence 3, three colors involved, alternative 1

If an indication with higher priority appears after acknowledgment of a lower priority indication the high priority indication will be shown as not acknowledged according to figure 66.

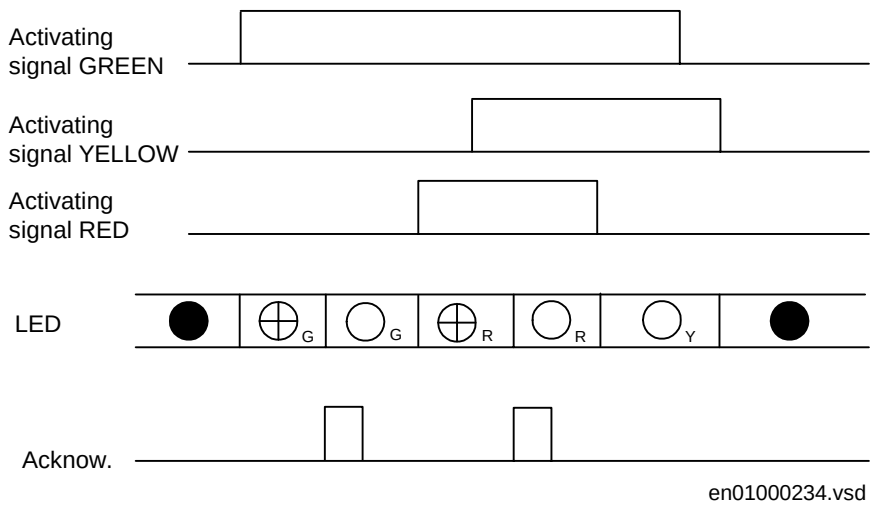

Fig. 66 Operating sequence 3, three colors involved, alternative 2

Sequence 4 (LatchedAck-S-F)

This sequence has the same functionality as sequence 3, but steady and flashing light have been alternated.

Sequence 5 (LatchedColl-S)

This sequence has a latched function and works in collecting mode. At the activation of the input signal, the indication will light up with a steady light. The difference to sequence 3 and 4 is that indications that are still activated will not be affected by the reset i.e. immediately after the positive edge of the reset has been executed a new reading and storing of active signals is performed. Every LED is independent of the other LEDs in its operation.

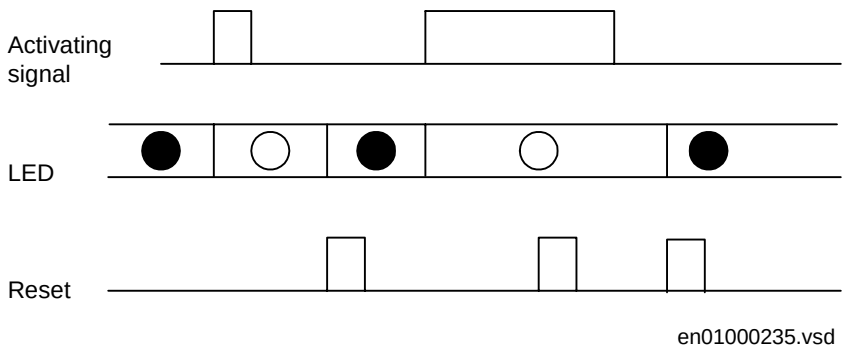

Fig. 67 Operating sequence 5 (LatchedColl-S)

That means if an indication with higher priority has reset while an indication with lower priority still is active at the time of reset, the LED will change color according to figure 68.

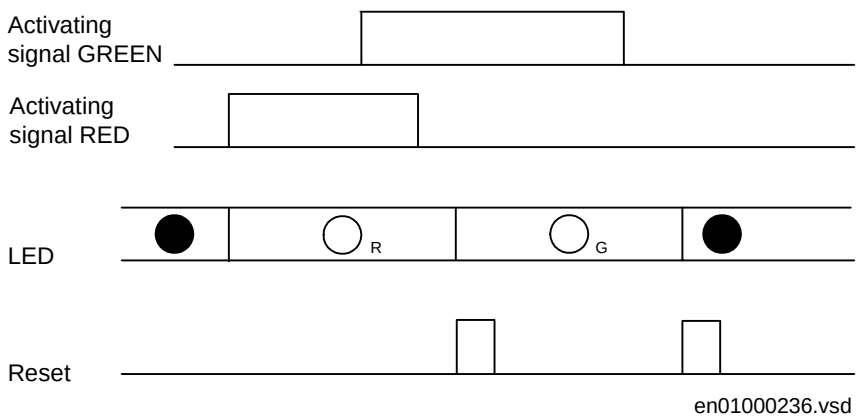

Fig. 68 Operating sequence 5, two colors

Sequence 6 (LatchedReset-S)

In this mode all activated LEDs, which are set to sequence 6 (LatchedReset-S), are automatically reset at a new disturbance when activating any input signal for other LEDs set to sequence 6 (LatchedReset-S). Also in this case indications that are still activated will not be affected by manual reset, i.e. immediately after the positive edge of that the manual reset has been executed a new reading and storing of active signals is performed. LEDs set for sequence 6 are completely independent in its operation of LEDs set for other sequences.

Definition of a disturbance

A disturbance is defined to last from the first LED set as LatchedReset-S is activated until a settable time, tRestart, has elapsed after that all activating signals for the LEDs set as LatchedReset-S have reset. However if all activating signals have reset and some signal again becomes active before tRestart has elapsed, the tRestart timer does not restart the timing sequence. A new disturbance start will be issued first when all signals have reset after tRestart has elapsed. A diagram of this functionality is shown in figure 69.

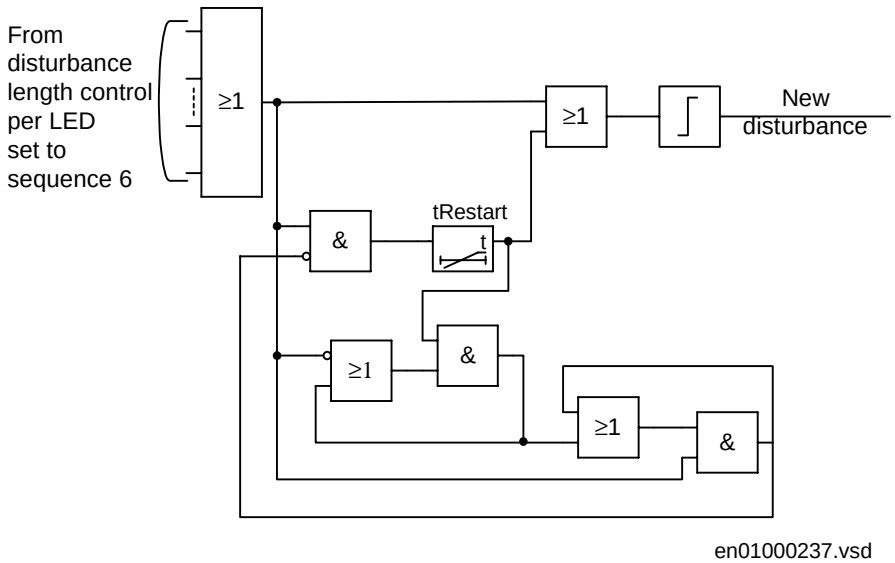

Fig. 69 Activation of new disturbance

In order not to have a lock-up of the indications in the case of a persisting signal each LED is provided with a timer, tMax, after which time the influence on the definition of a disturbance of that specific LED is inhibited. This functionality is shown i diagram in figure 70.

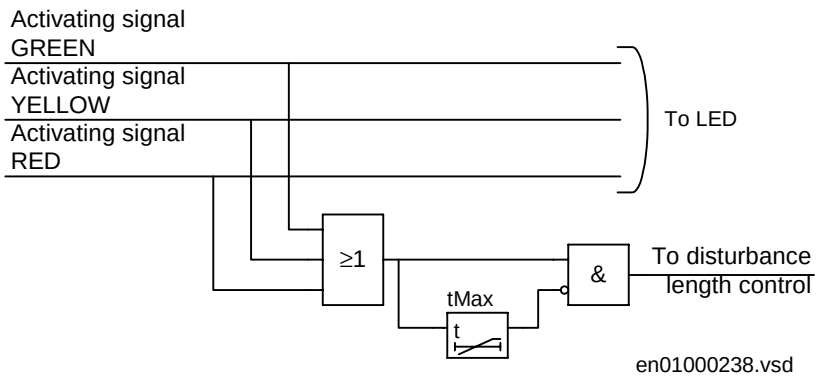

Fig. 70 Length control of activating signals

Timing diagram for sequence 6

Figure 71 shows the timing diagram for two indications within one disturbance.

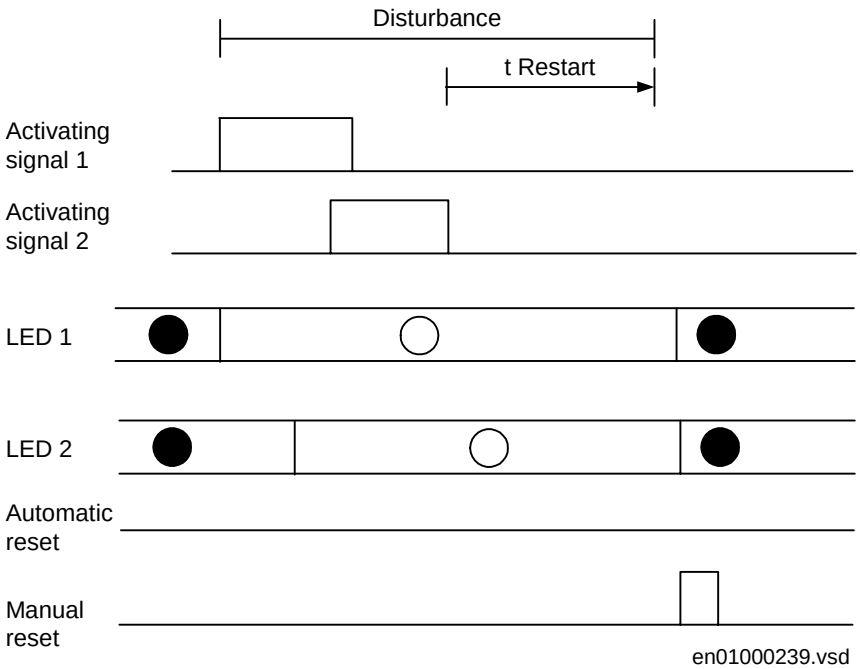

Fig. 71 Operating sequence 6 (LatchedReset-S), two indications within same disturbance

Figure 72 shows the timing diagram for a new indication after tRestart time has elapsed.

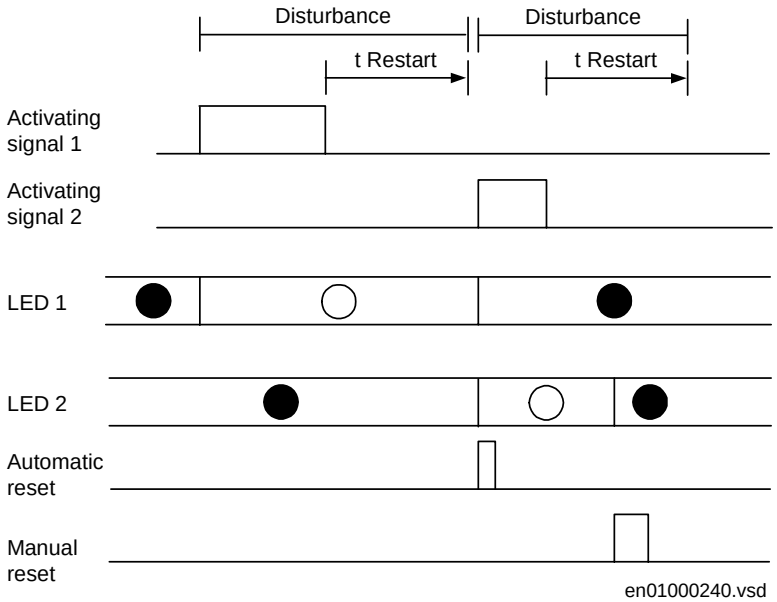

Fig. 72 Operating sequence 6 (LatchedReset-S), two different disturbances

Figure 73 shows the timing diagram when a new indication appears after the first one has reset but before tRestart has elapsed.

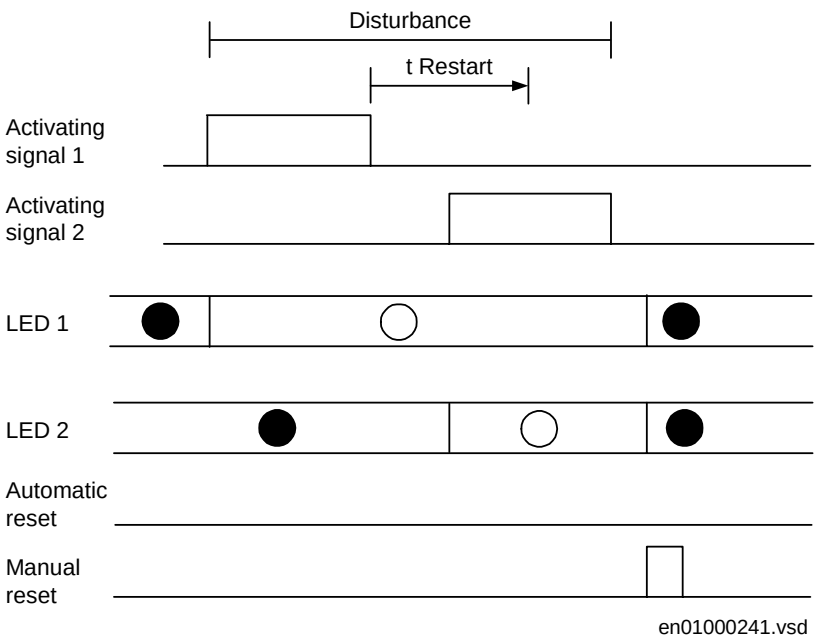

Fig. 73 Operating sequence 6 (LatchedReset-S), two indications within same disturbance but with reset of activating signal between

Figure 74 shows the timing diagram for manual reset.

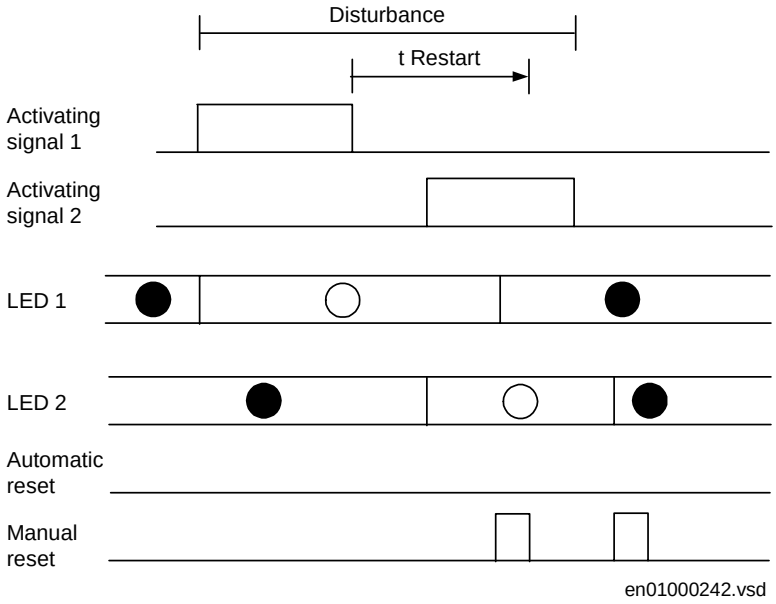

Fig. 74 Operating sequence 6 (LatchedReset-S), manual reset

24.3 Calculations

The parameters for the LED indication function are set via the local HMI or PST (Parameter Setting Tool). Refer to the Technical reference manual for setting parameters and path in local HMI.

25 Event function (EV)

25.1 General

When using a Substation Automation system, time-tagged events can be continuously sent or polled from the terminal. These events can come from any available signal in the terminal that is connected to the Event function block. The Event function block can also handle double indication, that is normally used to indicate positions of high-voltage apparatus. With this Event function block in the REx 5xx terminal, data can be sent to other terminals over the LON bus.

25.2 Functionality

The events that are sent from the terminal can come from both internal logical signals and binary input channels. The internal signals are time-tagged in the main processing module, while the binary input channels are time-tagged directly on each I/O module. The events are produced according to the set-event masks. The event masks are treated commonly for both the LON and SPA channels. All events according to the event mask are stored in a buffer, which contains up to 1000 events. If new events appear before the oldest event in the buffer is read, the oldest event is overwritten and an overflow alarm appears.

The outputs from the Event function block are formed by the reading of status and events by the station HMI on either every single input or double input. The user-defined name for each input is intended to be used by the station HMI.

The time-tagging of the events that are emerging from internal logical signals have a resolution corresponding to the execution cyclicity of the Event function block. The time-tagging of the events that are emerging from binary input signals have a resolution of 1 ms.

Two special signals for event registration purposes are available in the terminal, Terminal restarted and Event buffer overflow.

25.3 Single and double indications

The inputs can be used as individual events or can be defined as double indication events.

Double indications are used to handle a combination of two inputs at a time, for example, one input for the open and one for the close position of a circuit breaker or disconnector. The double indication consists of an odd and an even input number. When the odd input is defined as a double indication, the next even input is considered to be the other input. The odd inputs has a suppression timer to suppress events at 00 states.

25.4 Communication between terminals

The Event function block can also be used to send data over the LON bus to other terminals. The most common use is to transfer interlocking information between different bays. That can be performed by an Event function block used as a send block and with a Multiple Command function block used as a receive block. The configuration of the communication between control terminals is made by the LON Network Tool.

25.5 Setting

The inputs can be set individually from the Parameter Setting Tool (PST) or from the Station Monitoring System (SMS) under the Mask-Event function as:

- No events
- OnSet, at
- OnReset, at
- OnChange, at

To be used as double indications the odd inputs are individually set from the PST or SMS under the Mask-Event function as:

- Double indication
- Double indication with midposition suppression

Here, the settings of the corresponding even inputs have no meaning.

The event reporting can be set from PST or SMS as:

- Use event masks
- Report no events
- Report all events

Use of event masks is the normal reporting of events, that is, the events are reported as defined in the database.

An event mask can be set individually for each available signal in the terminal. The setting of the event mask can only be performed from PST or SMS.

All event mask settings are treated commonly for all communication channels of the terminal.

Report no events means blocking of all events in the terminal.

Report all events means that all events, that are set to OnSet/OnReset/OnChange are reported as OnChange, that is, both at set and reset of the signal. For double indications when the suppression time is set, the event ignores the timer and is reported directly. Masked events are still masked.

Parameters to be set for the Event function block are:

- NAMEyy including the name for each input.
- T_SUPRyy including the suppression time for double indications.
- INTERVAL used for the cyclic sending of data.
- BOUND telling that the block has connections to other terminals over the LON bus.

These parameters are set from the CAP 531 configuration tool. When the BOUND parameter is set, the settings of the event masks have no meaning.

26 Disturbance Report (DRP)

26.1 General

The aim of the Disturbance Report is to contribute to the highest possible quality of electrical supply. This is done by continuous collection of system data and, upon occurrence of fault, sorting and presenting a certain amount of pre-fault, fault and post-fault data.

The stored data can be used for analysis and decision making to find and eliminate possible system and equipment weaknesses.

26.2 Functionality

The Disturbance Report is a common name for several facilities to supply the operator with more information about the disturbances and the system. Some of the facilities are basic and some are optional.

The facilities included in the Disturbance Report are:

- Disturbance overview
- Indications
- Event recorder
- Trip values
- Disturbance recorder

The whole Disturbance Report can contain information for up to 10 disturbances each with the data coming from the parts mentioned above, depending on the options installed. All information in the Disturbance Report is stored in non-volatile flash memory. This implies, that no information is lost in case of loss of the power supply. The memory employs the FIFO principle, i.e. when the memory is full, the oldest disturbance will be overwritten.

On the built-in HMI the indications and the trip values are available. For a complete disturbance report SMS is required.

26.2.1 General disturbance information

26.2.1.1 Disturbance overview

is a summary of all the stored disturbances. The overview is only available via the Station Monitoring System (SMS). It contains:

- Disturbance index
- Date and time
- Trig signal (one, that activated the recording)

26.2.1.2 Disturbance data

Disturbance data can be accessed via the built-in HMI or via SMS. The date and time of the disturbance, the trig signal, the indications and the trip values are available provided, that the corresponding functions are installed.

26.2.2 Indications

Indications is a list of signals that were activated during the fault time of the distrubance.

26.2.3 Event recorder

The event recorder contains a list of up to 150 time tagged events, i.e. change of status of binary signals, for each disturbance.

26.2.4 Trip values

This function presents the phasors of selected currents and voltages before and during a disturbance.

26.2.5 Disturbance recorder

The disturbance recorder records analogue and binary signal data during the whole disturbance.

26.3 Settings

26.3.1 Signals

26.3.1.1 Binary signals

The Disturbance Report can be programmed to accept up to 48 binary signals. The Event Recorder and the Indication functions will use these binary signals for its function. In case the Disturbance Recording function is installed, the signals will be recorded as binary signals in this function.

26.3.1.2 Analogue signals

When the Disturbance Recorder is installed, up to 10 analogue signals can be selected for recording.

26.3.2 Triggers

The Disturbance Report function must be activated by a trigger in case of a disturbance. The trig conditions affect the entire disturbance report. As soon as a trig condition is fulfilled, a complete disturbance report is recorded. On the other hand, if no trig condition is fulfilled, there is no disturbance report. This implies the importance of choosing the right signals as trig conditions.

The following types of triggers are available:

- Manual trig
- Binary signal trig
- Analogue signal trig (over/under function)

26.3.2.1 Manual trig

Manual trig can be made either from the built-in HMI or via SMS. The possibility has been included to facilitate easy and convenient test of the Disturbance Report function.

26.3.2.2 Binary signal trig

Any of the 48 signals can be selected as a trigger for the Disturbance Report function. Thus, it is necessary to consider which signals should be included in the set of 48 signals and out of these, which should be used as a trigger. Incorrect choice may result in failure in initiating a recording in case of disturbance or unnecessary recording.

26.3.2.3 Analogue signal trig

Any analogue signal can be programmed to act as a trigger. The analogue signals are provided with level detectors both for under and over function. Selection of these signals and the operating level should be done with great care to avoid undue recordings. Specially under-current and under-voltage detectors should be used with great care.

26.3.3 Recording times

The recording time is valid for whole Disturbance Report, except for Indications. Indications are only recorded during the fault time.

The total recording time comprises the following parts:

- tPre, this is the so called pre-fault time. In fact it also includes a part of the fault condition due to the operating time of the trigger. The setting should be done so that this fact is taken into consideration. Thus the setting should cover the operating time for the slowest trigger and a few cycles of the true pre-fault condition.
- tFault is the fault duration time. In fact it includes a small part of the post fault condition, due to the reset time of the triggers. This time can not be set.

- tPost is the so called post-fault time. This time is settable and starts when all triggers have reset. The time should be set so that sufficient amount of post-fault data is recorded.
- tLim is the limit time. This setting will limit the recording time after the triggering. This parameter has been introduced to eliminate the risk of unwanted overwriting of valuable data. Since the recording memory employs the FIFO principle, this would be the case for the Disturbance Recording function, should a trigger not reset for one reason or another. The setting should be done considering the expected fault duration and set post-fault time.

27 Monitoring of DC analog measurements

27.1 Application

Fast, reliable supervision of different analog quantities is of vital importance during the normal operation of a power system. Operators in the control centres can, for example:

- Continuously follow active and reactive power flow in the network
- Supervise the busbar voltages
- Check the temperature of power transformers, shunt reactors
- Monitor the gas pressure in circuit breakers
- Monitor tap changer position

Different measuring methods are available for different quantities. Current and voltage instrument transformers provide the basic information on measured phase currents and voltages in different points within the power system. At the same time, currents and voltages serve as the input measuring quantities to power and energy meters.

Different measuring transducers provide information on electrical and non-electrical measuring quantities such as voltage, current, temperature, and pressure. In most cases, the measuring transducers change the values of the measured quantities into the direct current. The current value usually changes within the specified mA range in proportion to the value of the measured quantity.

Further processing of the direct currents obtained on the outputs of different measuring converters occurs within different control, protection, and monitoring terminals and within the higher hierarchical systems in the secondary power system.

27.2 Functionality

The RET 521 control, protection and monitoring terminal have a built-in option to measure and further process information from up to 6 different direct current information from different measuring transducers. Six independent measuring channels are located on each independent mA input module and the RET 521 terminals can accept from one up to six independent mA input modules, depending on the case size. Refer to the technical data and ordering particulars for the particular terminal.

Information about the measured quantities is then available to the user on different locations:

- Locally by means of the local human-machine-interface (HMI)
- Locally by means of a front-connected personal computer (PC)
- Remotely over the LON bus to the station control system (SCS)
- Remotely over the SPA port to the station monitoring system (SMS)

User-defined measuring ranges

The measuring range of different direct current measuring channels is settable by the user independent on each other within the range between -25 mA and +25 mA in steps of 0.01 mA. It is only necessary to select the upper operating limit I_Max higher than the lower one I_Min.

The measuring channel can have a value of 2 of the whole range I_Max - I_Min above the upper limit I_Max or below the lower limit I_Min, before an out-of-range error occurs. This means that with a nominal range of 0-10 mA, no out-of-range event will occur with a value between -0.2 mA and 10.2 mA.

User can this way select for each measuring quantity on each monitored object of a power system the most suitable measuring range and this way optimize a complete functionality together with the characteristics of the used measuring transducer.

Continuous monitoring of the measured quantity

The user can continuously monitor the measured quantity in each channel by means of six built-in operating limits (figure 75). Two of them are defined by the operating range selection: I_Max as the upper and I_Min as the lower operating limit. The other four operating limits operate in two different modes:

- Overfunction, when the measured current exceeds the HiWarn or HiAlarm pre-set values
- Underfunction, when the measured current decreases under the LowWarn or LowAlarm pre-set values

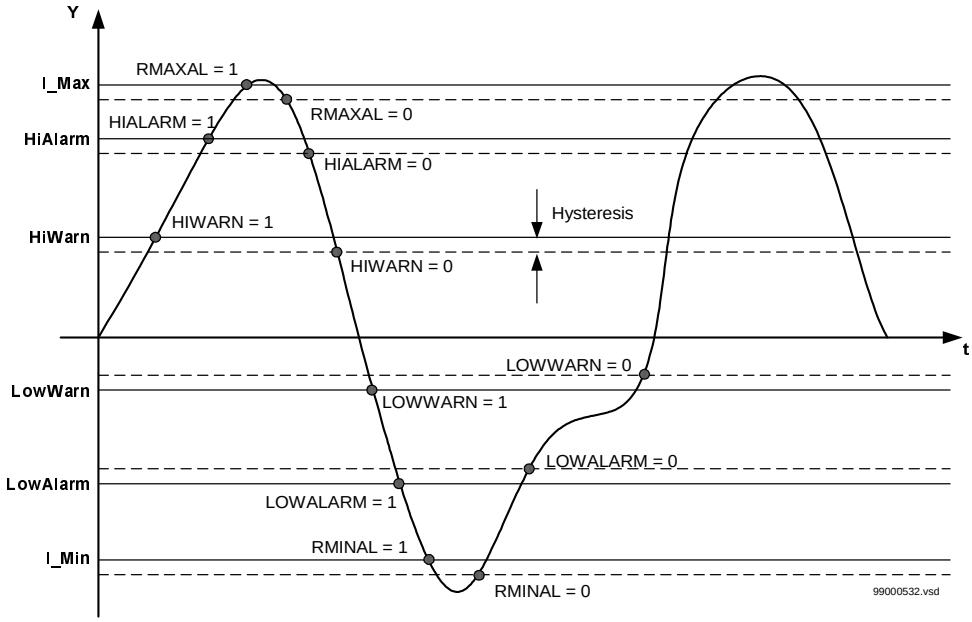

Fig. 75 Presentation of the operating limits

Each operating level has its corresponding functional output signal:

- RMAXAL
- HIWARN
- HIALARM
- LOWWARN
- LOWALARM
- RMINAL

The logical value of the functional output signals changes according to figure 75.

The user can set the hysteresis, which determines the difference between the operating and reset value at each operating point, in wide range for each measuring channel separately. The hysteresis is common for all operating values within one channel.

Continuous supervision of the measured quantity

The actual value of the measured quantity is available locally and remotely. The measurement is continuous for each channel separately, but the reporting of the value to the higher levels (control processor in the unit, HMI and SCS) depends on the selected reporting mode. The following basic reporting modes are available:

- Periodic reporting
- Periodic reporting with dead-band supervision in parallel
- Periodic reporting with dead-band supervision in series
- Dead-band reporting

Users can select between two types of dead-band supervision:

- Amplitude dead-band supervision (ADBS).
- Integrating dead-band supervision (IDBS).

Amplitude dead-band supervision

If the changed value —compared to the last reported value— is larger than the +/- ΔY predefined limits that are set by users, and if this is detected by a new measuring sample, then the measuring channel reports the new value to a higher level. This limits the information flow to a minimum necessary. Figure 76 shows an example of periodic reporting with the amplitude dead-band supervision.

The picture is simplified: the process is not continuous but the values are evaluated at time intervals depending on the sampling frequency chosen by the user (SampRate setting).

After the new value is reported, the new +/- ΔY limits for dead-band are automatically set around it. The new value is reported only if the measured quantity changes more than defined by the new +/- ΔY set limits.

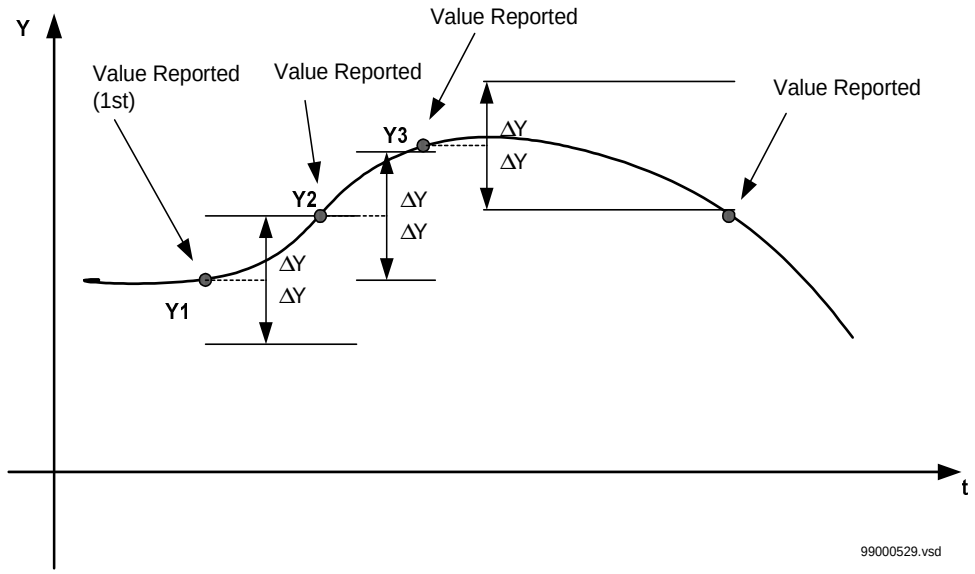

Fig. 76 Amplitude dead-band supervision reporting

Integrating dead-band supervision

The measured value is updated if the time integral of all changes exceeds the pre-set limit (figure 77), where an example of reporting with integrating dead-band supervision is shown. The picture is simplified: the process is not continuous but the values are evaluated at time intervals depending on the sampling frequency chosen by the user (SampRate setting).

The last value reported (Y1 in figure 77) serves as a basic value for further measurement. A difference is calculated between the last reported and the newly measured value during new sample and is multiplied by the time increment (discrete integral). The absolute values of these products are added until the pre-set value is exceeded. This occurs with the value Y2 that is reported and set as a new base for the following measurements (as well as for the values Y3, Y4 and Y5).

The integrating dead-band supervision is particularly suitable for monitoring signals with low variations that can last for relatively long periods.

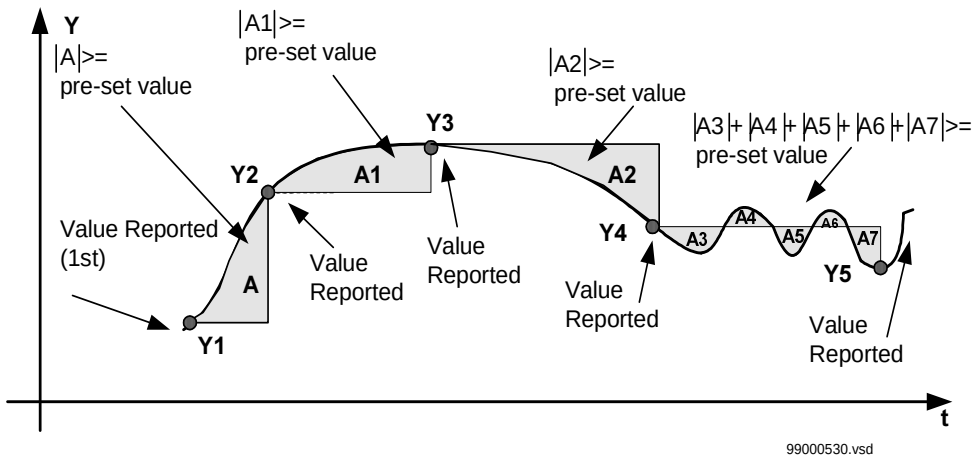

Fig. 77 Reporting with integrating dead-band supervision

Periodic reporting

The user can select the periodic reporting of measured value in time intervals between 1 and 3600 s (setting RepInt). The measuring channel reports the value even if it has not changed for more than the set limits of amplitude or integrating dead-band supervision (figure 78). To disable periodic reporting, set the reporting time interval to 0 s.

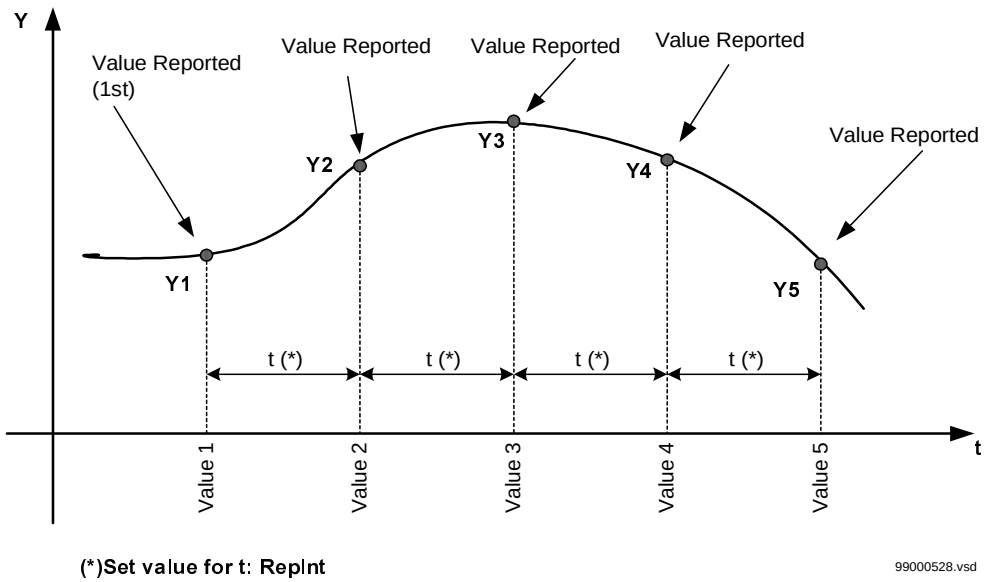

Fig. 78 Periodic reporting

Periodic reporting with parallel dead-band supervision

The newly measured value is reported:

- After each time interval for the periodic reporting expired, *OR*;
- When the new value is detected by the dead-band supervision function.

The amplitude dead-band and the integrating dead-band can be selected. The periodic reporting can be set in time intervals between 1 and 3600 seconds.

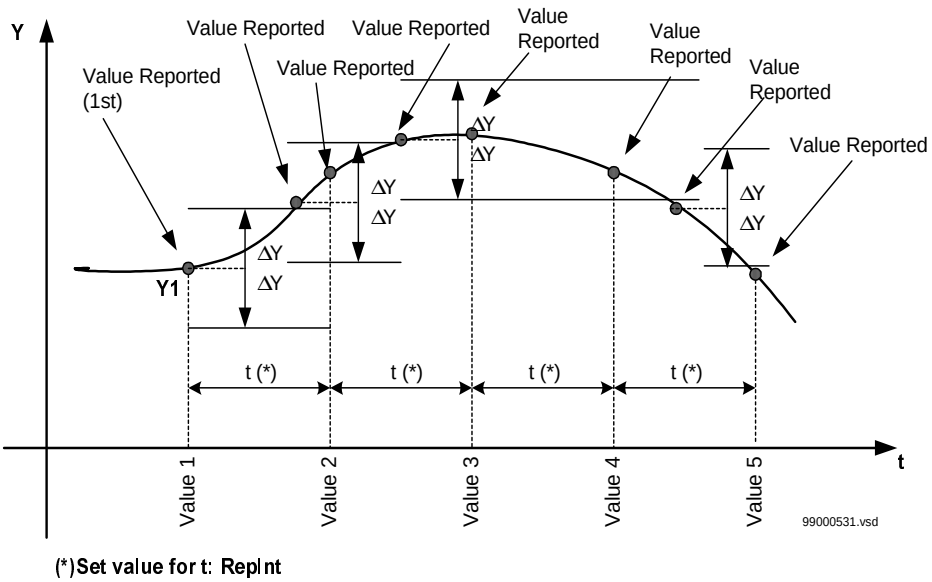

Fig. 79 Periodic reporting with amplitude dead-band supervision in parallel.

Periodic reporting with serial dead-band supervision

Periodic reporting can operate serially with the dead-band supervision. This means that the new value is reported only if the set time period expired AND if the dead-band limit was exceeded during the observed time (figures 80 and 81). The amplitude dead-band and the integrating dead-band can be selected. The periodic reporting can be set in time intervals between 1 and 3600 seconds.

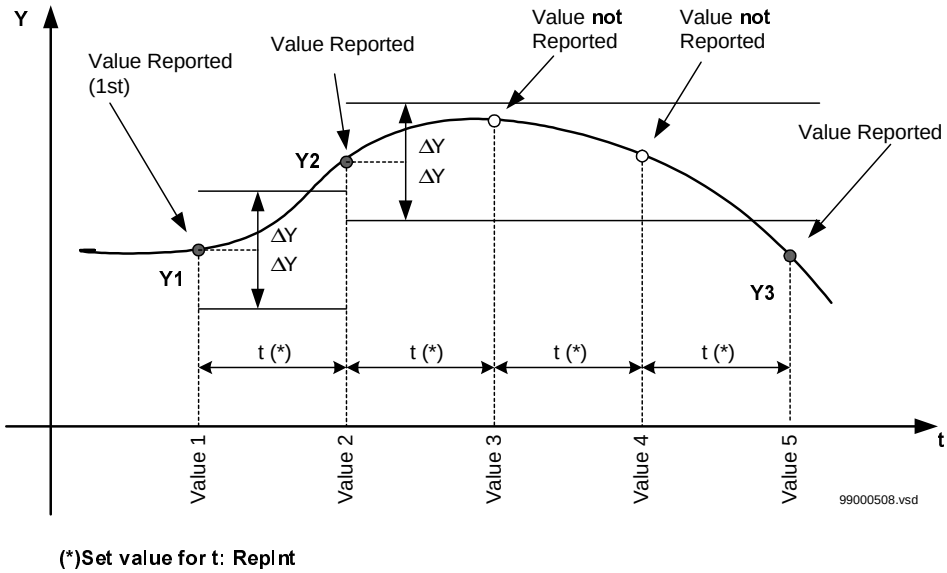

Fig. 80 Periodic reporting with amplitude dead-band supervision in series

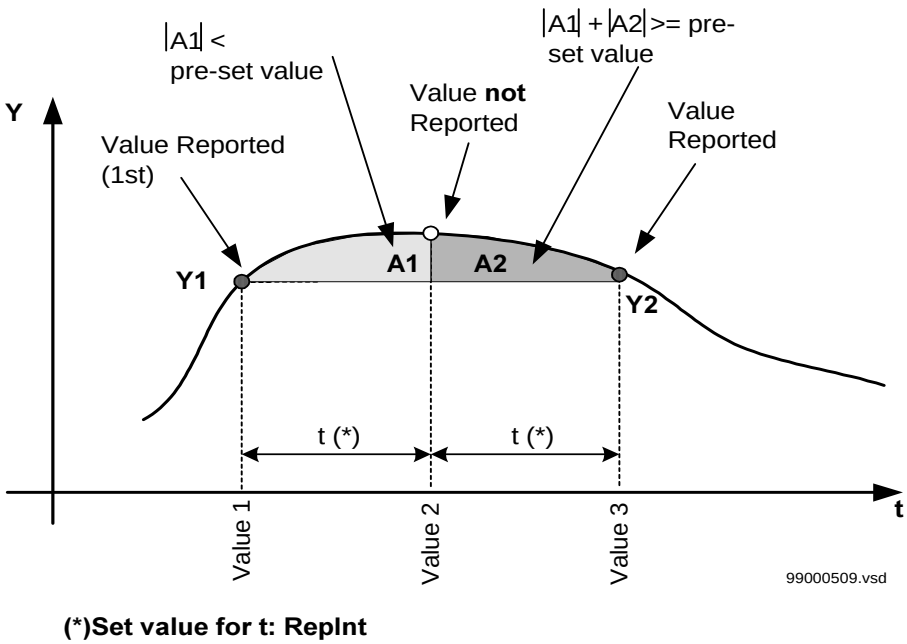

Fig. 81 Periodic reporting with integrating dead-band supervision in series

Combination of periodic reportings

The reporting of the new value depends on setting parameters for the dead-band and for the periodic reporting. Table 26 presents the dependence between different settings and the type of reporting for the new value of a measured quantity.

Table 26: Dependence of reporting on different setting parameters:

EnDeadB *	EnIDeadB *	EnDeadBP *	RepInt *	Reporting of the new value
Off	Off	Off	0	No measured values is reported
Off	On	On	t>0	The new measured value is reported only if the time t period expired and if, during this time, the integrating dead-band limits were exceeded (periodic reporting with integrating dead-band supervision in series)
On	Off	On	t>0	The new measured value is reported only if the time t period has expired and if, during this time, the amplitude dead-band limits were exceeded (periodic reporting with amplitude dead-band supervision in series)
On	On	On	t>0	The new measured value is reported only if the time t period expired and if at least one of the dead-band limits were exceeded (periodic reporting with dead-band supervision in series)
Off	On	Off	0	The new measured value is reported only when the integrated dead-band limits are exceeded
On	Off	Off	0	The new measured value is reported only when the amplitude dead-band limits were exceeded
On	On	Off	0	The new measured value is reported only if one of the dead-band limits was exceeded
x	x	Off	t>0	The new measured value is updated at least after the time t period expired. If the dead-band supervision is additionally selected, the updating also occurs when the corresponding dead-band limit was exceeded (periodic reporting with parallel dead-band supervision)
* Please see the setting parameters in the Technical reference manual for further explanation				

27.3 Design

The design of the mA input modules follows the design of all REx 5xx-series protection, control, and monitoring terminals that have distributed functionality, where the decision levels are placed as closely as possible to the process.

Each independent measuring module contains all necessary circuitry and functionality for measurement of six independent measuring quantities related to the corresponding measured direct currents.

On the accurate input shunt resistor (R), the direct input current (from the measuring converter) is converted into a proportional voltage signal (the voltage drop across the shunt resistor is in proportion to the measured current). Later, the voltage signal is processed within one differential type of measuring channel (figure 82).

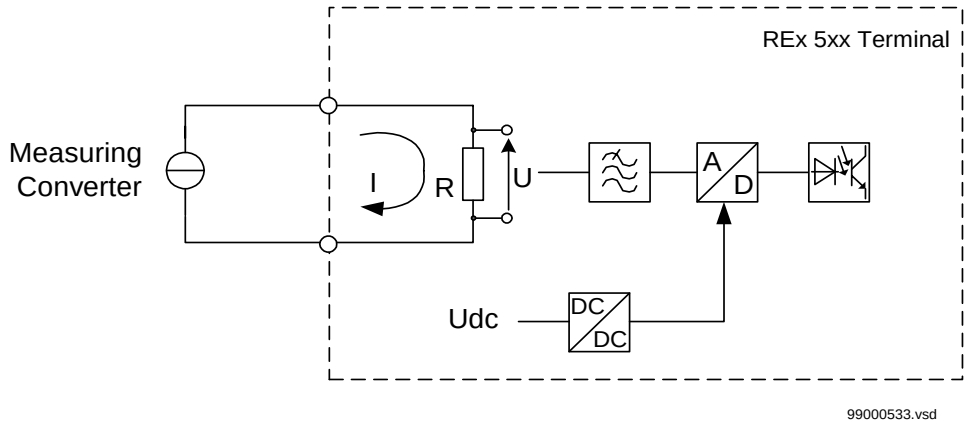

Fig. 82 Simplified diagram for the function

The measured voltage is filtered by the low-pass analog filter before entering the analog to digital converter (A/D). Users can set the sampling frequency of the A/D converter between 5 Hz and 255 Hz to adapt to different application requirements as best as possible.

The digital information is filtered by the digital low-pass filter with the $(\sin x/x)^3$ response. The filter notch frequency automatically follows the selected sampling frequency. The relation between the frequency corresponding to the suppression of -3 dB and the filter notch frequency corresponds to the equation:

$$f_{-3dB} = 0,262 \cdot f_{notch}$$

Using optocouplers and DC/DC conversion elements that are used separately for each measuring channel, the input circuitry of each measuring channel is galvanically separated from:

- The internal measuring circuits
- The control microprocessor on the board

A microprocessor collects the digitized information from each measuring channel. The microprocessor serves as a communication interface to the main processing module (MPM).

All processing of the measured signal is performed on the module so that only the minimum amount of information is necessary to be transmitted to and from the MPM. The measuring module receives information from the MPM on setting and the command parameters; it reports the measured values and additional information—according to needs and values of different parameters.

Each measuring channel is calibrated very accurately during the production process. The continuous internal zero offset and full-scale calibration during the normal operation is performed by the A/D converter. The calibration covers almost all analog parts of the A/D conversion, but neglects the shunt resistance.

Each measuring channel has built in a zero-value supervision, which greatly rejects the noise generated by the measuring transducers and other external equipment. The value of the measured input current is reported equal to zero (0) if the measured primary quantity does not exceed +/-0.5% of the maximum measuring range.

The complete measuring module is equipped with advanced self-supervision. Only the outermost analog circuits cannot be monitored. The A/D converter, optocouplers, digital circuitry, and DC/DC converters, are all supervised on the module. Over the CAN bus, the measuring module sends a message to the MPM for any detected errors on the supervised circuitry.

27.4 Calculations

The PST Parameter Setting Tool has to be used in order to set all the parameters that are related to different DC analog quantities.

Users can set the 13 character name for each measuring channel.

All the monitoring operating values and the hysteresis can be set directly in the mA of the measured input currents from the measuring transducers.

The measured quantities can be displayed locally and/or remotely according to the corresponding modules that are separately set for each measuring channel by the users (five characters).

The relation between the measured quantity in the power system and the setting range of the direct current measuring channel corresponds to this equation:

$$Value = ValueMin + (I - IMin) \cdot \frac{ValueMax - ValueMin}{IMax - IMin}$$

Where:

I_Min	is the set value for the minimum operating current of a channel in mA.
I_Max	is the set value for the maximum operating current of a channel in mA.
ValueMin	is the value of the primary measuring quantity corresponding to the set value of minimum operating current of a channel, I_Min.
ValueMax	is the value of the primary measuring quantity corresponding to the set value of maximum operating current of a channel, I_Max.
Value	is the actual value of the primary measured quantity.

Figure 83 shows the relationship between the direct mA current I and the actual value of the primary measured quantity, Value.

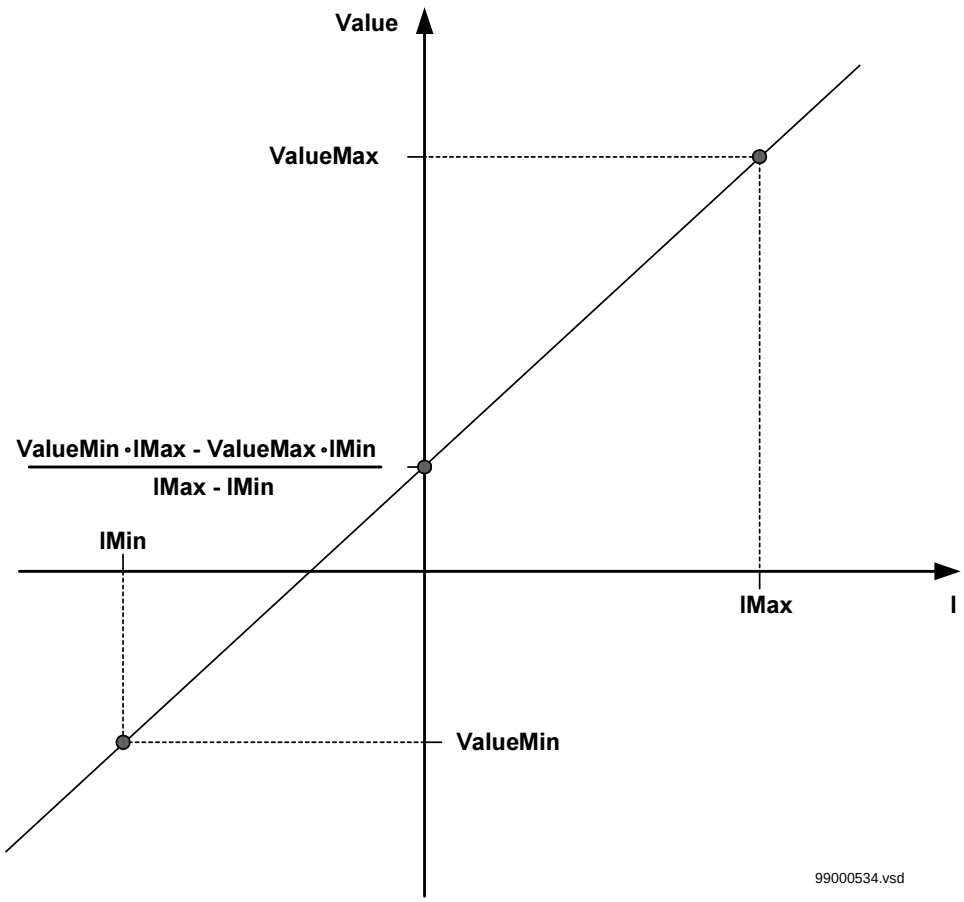

Fig. 83 Relationship between the direct current (I) and the measured quantity primary value (Value)

The dead-band limits can be set directly in the mA of the input direct current for:

- Amplitude dead-band supervision ADBS
- Integrating dead-band supervision IDBS

The IDBS area [mAs] is defined by the following equation:

$$IDBS = \frac{IDeadB}{SampRate} = IDeadB \cdot ts$$

where:

IDeadB	is the set value of the current level for IDBS in mA.
SampRate	is the sampling rate (frequency) set value, in Hz.
ts = 1/SampRate	is the time between two samples in s.

If a 0.1 mA variation in the monitored quantity for 10 minutes (600 s) is the event that should cause the trigger of the IDBS monitoring (reporting of the value because of IDBS threshold operation) and the sampling frequency (SampRate) of the monitored quantity is 5 Hz, than the set value for IDBS (IDeadB) will be 300 mA:

$$IDBS = 0.1 \cdot 600 = 60[mA\ s]$$

$$IDeadB = IDBS \cdot SampRate = 60 \cdot 5 = 300[mA]$$

The polarity of connected direct current input signal can be changed by setting the ChSign to On or Off. This way it is possible to compensate by setting the possible wrong connection of the direct current leads between the measuring converter and the input terminals of the REx 5xx series unit.

The setting table lists all setting parameters with additional explanation.

Note!

It is important to set the time for periodic reporting and deadband in an optimized way to minimize the load on the station bus.

Data communication

28 Remote communication (RC)

28.1 General

The remote communication can be used for different purposes to enable better access to the information stored in the terminals.

The remote communication can be used with a station monitoring system (SMS) or with computerized substation control system (SCS). Normally, SPA communication is used for SMS and LON communication for SCS. SPA communication is also applied when using the front communication port, but for this purpose, no special Remote communication function is required in the terminal. Only the software in the PC and a special cable for front connection is needed.

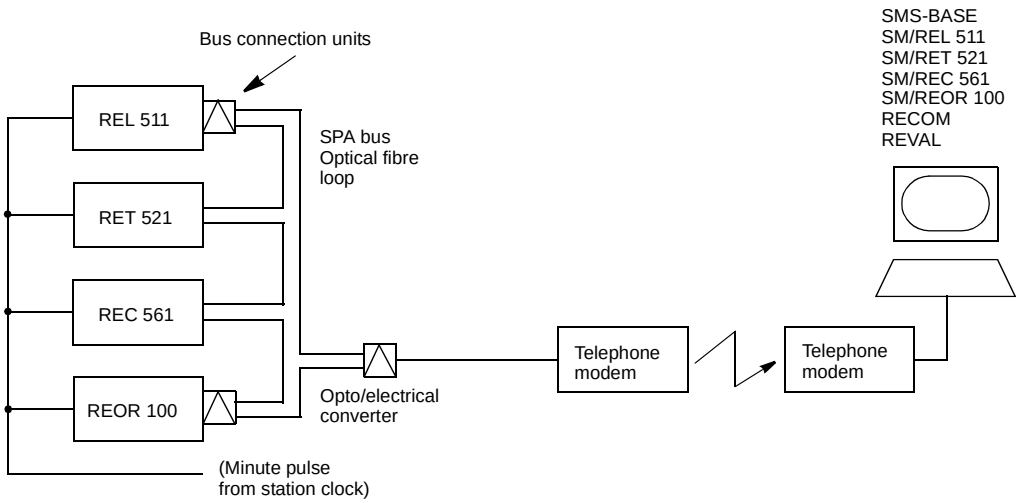

Fig. 84 Example of SPA communication structure for SMS

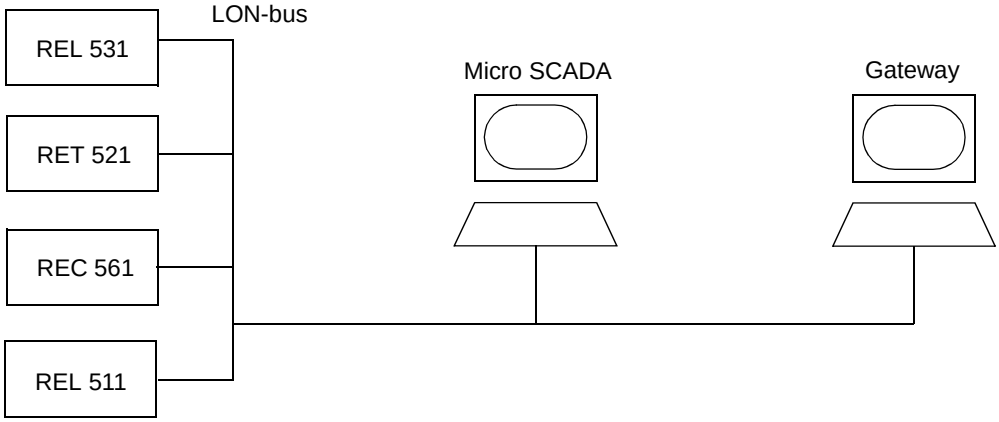

Fig. 85 Example of LON communication structure for SCS

28.2 Functionality

All remote communication to and from the terminal (including the front PC port communication) uses either the SPA-bus V 2.4 protocol or the LonTalk protocol.

The remote communication use optical fibres for transfer of data within a station.The principle of two independent communication ports is used. For this reason, two serial ports for connection of optical fibres are optionally available in the terminal, one for LON communication and one for SPA communication.

28.2.1 SPA operation

The SPA protocol is an ASCII-based protocol for serial communication. The communication is based on a master-slave principle, where the terminal is a slave, and the PC is the master. Only one master can be applied on each application. A program is needed in the master computer for interpretation of the SPA-bus codes, and for translation of the settings sent to the terminal.

28.2.2 LON operation

The LON protocol is specified in the *LonTalkProtocol Specification*. This protocol is designed for communication in control networks and is a pier-to-pier protocol where all the devices connected to the network can communicate with each other directly. Also see the references page.

28.3 Settings

The following settings are provided for the SPA communication:

On the front port:

- slave number
- baud rate

On the rear port:

- slave number
- baud rate
- active group restriction
- setting restriction

The parameters for the LON communication are set with a special tool called LNT, LON Network Tool.

Enhancing functionality

29 Tap position measuring

The actual tap changer position can be measured via binary input signals or via miliamp input signal. Differential Protection function (DIFP) and Voltage Control function (VCTR) can use this measured tap changer position value to enhance their functionality.

29.1 Tap changer position measuring via mA card

Only the first input on mA card (i.e. MIM) is adapted for measuring, converting and presentation of the tap changer position. This MIM input will act as a tap position reading input when the parameter input OLTCOP of the MIM function block is set to On. When parameter input OLTCOP is set to Off the normal MIM functionality will be active and the tap position value is undefined (i.e. equal to 0).

The measurement of the tap changer position via MIM card is based on the principle that the specified mA input signal range (usually 4-20 mA) is divided into N intervals corresponding to the number of positions available on the tap changer. All mA values within one interval are associated with one tap changer position value. See figure 86 for more details.

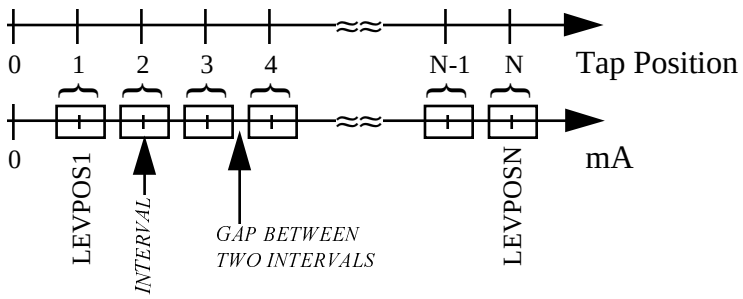

Fig. 86 Principle of tap position measuring via mA input signal

The number of available tap changer positions N is defined by setting the parameter input NOOFPOS of the MIM function block. Setting range for this parameter is between 1 and 39.

The mid point of the mA interval which correspond to tap position 1 is defined by setting the parameter input LEVPOS1 of the MIM function block. Setting range for this parameter is from 0.0 to 4.0 mA.

The mid point of the mA interval which correspond to tap position N=NOOFPOS is defined by setting the parameter input LEVPOSN of the MIM function block. Setting range for this parameter is from 10.0 to 20.0mA.

Difference (i.e. the step) between two mid points of the two neighboring intervals is calculated as per the following formula:

$$\text{Step} = \frac{\text{LEVPOSN} - \text{LEVPOS1}}{N - 1} \qquad [\text{mA}]$$

To ensure secure reading of tap position, the size of the interval is smaller than the step between two interval midpoints. Interval size is calculated as per the following formula:

$$\text{INTERVAL SIZE} = 0.9 \cdot \text{STEP} \qquad [\text{mA}]$$

Because the interval is symmetrical around its midpoint it is more important to calculate one half of its value as per the following formula:

$$\text{HALF OF INTERVAL SIZE} = \frac{\text{INTERVAL SIZE}}{2} \qquad [\text{mA}]$$

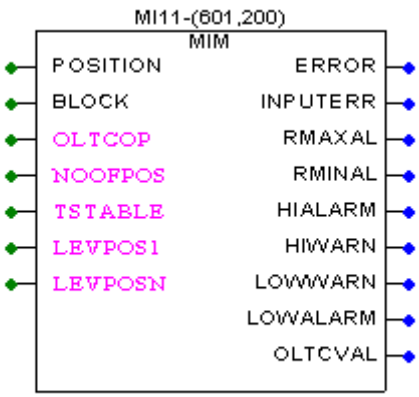

Fig. 87 The MIM/Input 1 function block representation in the CAP 531 configuration tool

If the mA input signal value is somewhere in between two intervals, i.e. in the gap, the tap position is undefined (i.e. equal to 0).

The output OLTCVAL shall be connected to the VCTR and DIFP function blocks as a tap changer position input. Output INPUTERR can be connected to the DIFP and VCTR function blocks to indicate faulty reading of tap position.

When MIM input No 1 is used for tap position measuring than the following two values are available as service report:

Measured mA input signal is shown on the HMI as a service value under menu

Service Report
MIM1

Measured tap changer position is shown on the HMI as a service value under menu

Service Report
MIM1

Practical Example:

For an tap changer with 17 steps and with mA input signal range of 4-20 mA the following can be calculated:

$$\text{STEP} = \frac{20-4}{17-1} = 1.0 \text{ mA}$$

$$\text{INTERVAL SIZE} = 0.9 \cdot 1.0 = 0.9 \text{ mA}$$

$$\text{HALF OF INTERVAL SIZE} = \frac{0.9}{2} = 0.45 \text{ mA}$$

From above data the following table can be produced for conversion of mA values to corresponding tap position numbers:

Table 27: mA interval vs. tap position

mA Interval	4.0±0.45	5.0±0.45	6.0±0.45	7.0±0.45	...	19.0±0.45	20.0±0.45
Tap Position	1	2	3	4	...	16	17

The tap position value will be 0 to indicate an undefined value, i.e., when the signal is found between two intervals or when the signal is out of specified input range, e.g. >0.0 mA.

To avoid any possibility that a fluctuating mA input signal can cause problem to the VCTR or DIFP functions, a settable time delay will be used before the tap changer value is reported. The parameter input TSTABLE of the MIM function block is used for this purpose. Setting range for this parameter is from 0 to 10 seconds.

29.2 Necessary MIM settings

To enable MIM card to report measured values to the main processing card it is important to set the parameter Operation to On and the parameter RepInt to a nonzero value (for example 1 second).

Note: Settings in PST are not used to convert mA input signal into tap position value. Therefore it is important to set a scaling factor in PST as shown below in order not to interfere with tap position reading:

MaxValue = 20; I_Max = 20; MinValue = 0; I_Min = 0;

If these four parameters are set as shown above they will insure that the scaling factor is one and that tap position will be measured according to the settings in the the configuration.

Finally the tap changer position reporting shall be set as shown in the last row of table 26, page 183.

29.3 Direct contact position indication

If the positions are not to many and there exists enough not otherwise used logic OR-gates, it is possible to use this OR-gates to create a binary coded signal of all the direct contact inputs. Then this coded signal can be connected to the CNV block described in the paragraph below.

29.4 Converting binary data

The binary converter function block (CNV) decodes binary data from up to six binary inputs to an integer value. The input pattern may be decoded either as binary format or BCD format depending on the setting of the parameter Codetype of the CNV function block. If this parameter is set to zero then binary decoding will be used or if it is set to one then BCD decoding will be used. See the description of CNV block in the RET 521 technical description manual for details on BCD and binary conversion.

To avoid any possibility that a bouncing binary input signal can cause problem to the VCTR or DIFP functions a settable time delay will be used before the tap changer value is reported. The parameter Tstable of the CNV function block is used for this purpose. Setting range for this parameter is from 0 to 10 seconds.

It is also possible to use even parity check of the input binary signal. The parity is checked if the parameter Paruse of the CNV function block in the configuration is set to On.

The input BIERR of the CNV function block in can be used as supervisory input for indication of any external error in the system for reading of tap changer position.

Error check is implemented in the CNV function block. If an error is detected in the binary input signal, the ERROR output is set to one and the output VALUE is forced to zero.

The output VALUE shall be connected to the VCTR and DIFP function blocks as a tap changer position input. The ERROR output can be connected to DIFP and VCTR functions to indicate faulty reading of tap position.

29.5 Tap position reading for voltage control

The actual tap changer position can be measured via binary input signals or via miliamp input signal. To give the information about tap position to the VCTR function the following needs to be done:

Outputs from the CNV or MI11 function blocks which holds actual tap position shall be connected to the input TCPOS of the VCTR function block. The ERROR output is connected to the corresponding input INERR of the VCTR function block to indicate an error in reading of tap position.

The parameter Postype of the VCTR function block can be set to None, BI (binary input) or AI (analog mA input). The input TCPOS has to be connected to the MI11 function block when AI is selected, or to the CNV function block when BI is selected. When the tap changer position indication is unavailable the Postype parameter should be set to None. This means that no supervision of the tap changer position and its operation is performed.

The lower and upper tap position settings under VCTR function LowVoltTap and HighVoltTap should be interpreted as following:

The Lowvolttap means the tap position (e.g. usually position 1) with maximum number of turns in the primary winding, that gives minimum busbar voltage on secondary side of the power transformer.

The HighVoltTap means the tap position (e.g. usually position N) with minimum number of turns in the primary winding, that gives maximum busbar voltage on secondary side of the power transformer.

29.6 Tap position reading for differential protection

The actual tap changer position can be measured via binary input signals or via mA input signal.

Under the menu Edit/Function Selector in the CAP 531 configuration tool, the function selector for the DIFP function block can be set to NoOLTC or OLTC. When the tap changer position indication is not available, the function selector shall be set to NoOLTC. In this way inputs and parameters related to reading of tap changer position, will not be visible on the function block.

When the tap changer position indication is available, The DIFP function selector shall be set to OLTC. Then to give the necessary information about tap position to the DIFP function the following need to be done:

Outputs from the CNV or MI11 function blocks which holds actual tap position shall be connected to the input TCPOS of the DIFP function block. The ERROR output is connected to the corresponding input OLTERR of the DIFP function block to indicate an error in reading of tap position.

The parameter Postype of the DIFP function block, can be set to BI or AI. The input TCPOS must be connected to the MI11 function block when AI is selected and to the CNV function block when BI is selected.

The parameter Oltc2w (two winding protection), or Oltc3w (three winding protection), of the DIFP function block, shall be set in accordance with physical location of the tap changer mechanism (i.e. tap changer mechanism located on primary, secondary or tertiary side). This setting is used to indicate to the differential function which winding will change number of turns when the tap changer position is changed.

The following settings for DIFP function are relevant for reading of tap changer position:

The setting NoOfTaps means the total number of tap positions.

The setting RatedTap means the tap number which corresponds to rated voltages set under settings for transformer data. In the same time these voltages will be used to calculate nominal turns ratio. This nominal turns ratio will be used when for any reason tap position reading is not available (i.e. tap value is 0 or tap position reading error is set to 1).

The setting MinTapVoltage means the tap 1 voltage, from the transformer name plate, of the winding with tap changer mechanism.

The settings MaxTapVoltage means the tap N (i.e. for maximum tap position) voltage, from the transformer name plate, of the winding with tap changer mechanism.

It should be noted that all above data can be easily found on the transformer name plate.

29.7 Practical example

For a two winding transformer with the following basic data

Rated Voltages:	132/11kV
Rated Power:	40MVA
Rated Currents:	175/2100A
Rated Impedance:	X=10,6%
Vector Group:	Yd11

and the following data about tap changer mechanism:

TAP	HV [kV]	LV [kV]
1	138,6	
2	136,96	
3	135,33	
4	133,71	
5	132,07	11
6	130,45	
7	128,79	
8	127,17	
9	125,4	
10	123,78	
11	122,14	
12	120,5	
13	118,88	
14	117,25	
15	115,61	
16	113,97	
17	112,2	

for which the tap changer position measuring is performed via mA input, with 4-20mA input signal the following settings are necessary to properly measure tap changer position:

29.7.1 Settings for MIM card

MIM card/input 1 settings:

OLTCOP = 1

NOOFPOS = 17

TSTABLE = 2.0

LEVPOS1 = 4.0mA

LEVPOSN = 20.0mA

MIM card/input 1 settings in PST:

MaxValue = 20

I_Max = 20

MinValue = 4

I_Min = 4;

29.7.2 Settings for voltage control function

VCTR settings in the configuration:

POSTYPE = 2 (i.e. mA Card)

VCTR settings in PST:

LowVoltTap = 1

HighVoltTap = 17

29.7.3 Settings for differential function

DIFP settings in the configuration:

POSTYPE = 2 (i.e. mA Card)

OLTC2W = 1 (i.e. Primary)

DIFP settings in PST or from HMI:

NoOfTaps = 17

RatedTap = 5

MinTapVoltage = 138.6kV

MaxTapVoltage = 112.2kV

The chapter “Requirements”

This chapter deals with the requirements for external equipment and functionality that RET 521 demands in order to work as intended.

1 CT requirements

The main CTs are always supposed to be star connected. The staring of all CTs connected to the terminal have to be set under “Configuration” menu in the HMI or SMS. These settings are very important in order to enable RET 521 to measure and display the currents in accordance with its internal reference directions as shown on. From this figure is obvious that all currents has a reference value towards the protected power transformer.

The other settings for CTs and VTs under the same “Configuration” menu should be properly set as well to enable RET 521 to use proper scaling factors for current and voltage magnitude measurements.

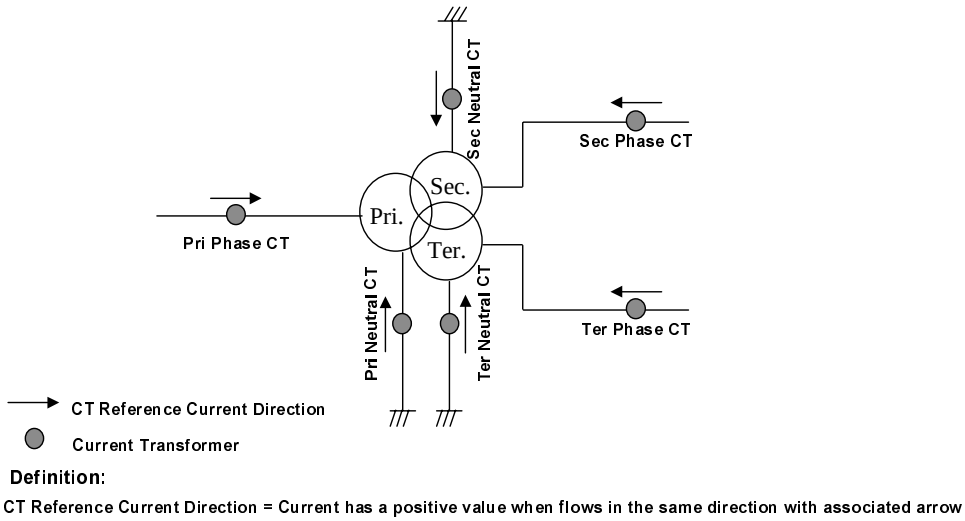

Fig. 1 RET 521 Internal Reference Directions for Current Transformers

The performance of the RET 521 terminal will depends on the conditions and the quality of the current signals fed to it. The protection terminal RET 521 has been designed to permit relatively heavy current transformer saturation with maintained correct operation. To guarantee correct operation the CTs must be able to correctly reproduce the current for a minimum time before the CT will begin to saturate. To fulfil the requirement on a specified time to saturation the CTs must fulfil the requirements of a minimum secondary e.m.f. that is specified below.

1.1 Classification

There are several different ways to specify CTs. Conventional magnetic core CTs are usually specified and manufactured according to some international or national standards, which specify different protection classes as well. However, generally there are three different types of current transformers:

- high remanence type CT
- low remanence type CT
- non remanence type CT

The high remanence type has no limit for the remanent flux. This CT has a magnetic core without any airgap and a remanent flux might remain for almost infinite time. In this type of transformers the remanence flux can be up to 70-80 % of the saturation flux. Typical examples of high remanence type CT are class P, TPS, TPX according to IEC, class P, X according to BS (British Standard) and nongapped class C, K according to ANSI/IEEE.

The low remanence type has a specified limit for the remanent flux. This CT is made with a small airgap to reduce the remanent flux to a level that does not exceed 10 % of the saturation flux. The small airgap has only very limited influence on the other properties of the CT. Class TPY according to IEC is a low remanence type CT.

The non remanence type CT has practically negligible level of remanent flux. This type of CT has relatively big airgaps in order to reduce the remanent flux to practically zero level. In the same time, these airgaps minimize the influence of the DC-component from the primary fault current. The airgaps will also reduce the measuring accuracy in the non-saturated region of operation. Class TPZ according to IEC is a non remanence type CT.

The rated equivalent limiting secondary e.m.f. E_{al} according to the IEC 60044-6 standard is used to specify the CT requirements for RET 521. The requirements are also specified according to other standards.

1.2 Current transformer requirements for CTs according to the IEC 60044-6 standard

All current transformers of high remanence and low remanence type that fulfil the requirements on the rated equivalent secondary e.m.f. E_{al} below can be used. The characteristic of the non remanence type CT (TPZ) is not well defined as far as the phase angle error is concerned, and should not be used.

To avoid maloperation on energization of the power transformer and in connection with fault current that passes through the power transformer, the rated equivalent limiting secondary e.m.f. Eal must be larger than or equal to the maximum of the required secondary e.m.f. E_{alreq} below:

$$E_{al} \geq E_{alreq} = 30 \cdot I_{nt} \cdot (R_{ct} + k \cdot R_l + Z_r) \qquad (a)$$

Here I_{nt} is the main CT secondary current corresponding to rated primary current of the power transformer, Rct is the secondary resistance of the main CT, R_l is the resistance of a single secondary wire from the main CTs to the relay, Z_r is the burden of the relay, and k is a constant which depends on power system grounding

k = 1 for isolated or high impedance grounding system
k = 2 for low impedance or solidly grounded system

To avoid maloperation in connection with fault current that passes through the power transformer, the rated equivalent limiting secondary e.m.f., E_{al}, should also satisfy requirement (b) below:

$$E_{al} \geq E_{alreq} = 2 \cdot I_{tf} \cdot (R_{ct} + k \cdot R_l + Z_r) \qquad (b)$$

Here I_{tf} is the maximum secondary side fault current that pass two main CTs and the power transformer. Requirement (b) relates to the case when the transformation ratios are unequal and the case when the magnetisation characteristics are not equal.

In substations with breaker-and-a-half or double-busbar double-breaker arrangement, the fault current may pass two main CTs for the transformer differential protection without passing the power transformer. In such cases, the CTs must satisfy requirement (a) and the requirement (c) below:

$$E_{al} \geq E_{alreq} = I_f \cdot (R_{ct} + k \cdot R_l + Z_r) \qquad (c)$$

Here I_f is the maximum secondary side fault current that passes two main CTs without passing the power transformer. Requirement (c) applies to the case when both main CTs have equal transformation ratio and magnetisation characteristics.

1.3 Current transformer requirements for CTs according to other standards

All kinds of conventional magnetic core CTs are possible to be used with RET 521 terminals if they fulfil the requirements that correspond to the above specified according to the IEC 60044-6 standard. From the different standards and available data for relaying applications it is possible to approximately calculate a secondary e.m.f. of the CT. It is then possible to compare this to the required secondary e.m.f. E_{alreq} and judge if the CT fulfils the requirements. The requirements according to some other standards are specified below.

Current transfomer according to IEC 60044-1

A CT according to IEC 60044-1 is specified by the secondary limiting e.m.f. E_{2max}. The value of the E_{2max} is approximately equal to E_{al} according to IEC 60044-6.

$$E_{al} \approx E_{2max}$$

The current transformers must have a secondary limiting e.m.f. E_{2max} that fulfills the following:

E_{2max} > maximum of E_{alreq}

Current transformer according to British Standard (BS)

A CT according to BS will often be specified by the rated knee-point e.m.f. E_{kneeBS}. The value of the E_{kneeBS} is lower than E_{al} according to IEC 60044-6. It is not possible to give a general relation between the E_{kneeBS} and the Eal but normally the E_{kneeBS} is 80 to 85 % of the E_{al} value. Therefore, the rated equivalent limiting secondary e.m.f. E_{alBS} for a CT specified according to BS can be estimated to:

$$E_{alBS} \approx 1.2 \cdot E_{2max}$$

The current transformers must have a rated knee-point e.m.f. E_{kneeBS} that fulfills the following:

$$1.2 \cdot E_{kneeBS} > \text{maximum of } E_{alreq}$$

Current transformer according to ANSI/IEEE

A CT according to ANSI/IEEE is specified in a little different way. For example a CT of class C has a specified secondary terminal voltage U_{ANSI}. There is a few standardized value of U_{ANSI} (e.g. for a C400 the U_{ANSI} is 400 V). The rated equivalent limiting secondary e.m.f. E_{alANSI} for a CT specified according to ANSI/IEEE can be estimated as follows:

$$E_{alANSI} = | 20 \cdot I_{sn} \cdot R_{CT} + U_{ANSI} | = | 20 \cdot I_{sn} \cdot R_{CT} + 20 \cdot I_{sn} \cdot Z_{bANSI}$$

where

Z_{bANSI} The impedance (i.e. complex quantity) of the standard ANSI burden for the specific C class (Ω)

U_{ANSI} The secondary terminal voltage for the specific C class (V)

The CT requirements are fulfilled if:

$$E_{alANSI} > \text{maximum of } E_{alreq}$$

Often an ANSI/IEEE CT also has a specified knee-point voltage $U_{kneeANSI}$. This is graphically defined from the excitation curve. The knee-point according to ANSI/IEEE has normally a lower value than the knee-point according to BS. The rated equivalent limiting secondary e.m.f. E_{alANSI} for a CT specified according to ANSI/IEEE can be estimated to:

$$E_{alANSI} \approx 1.3 \cdot U_{kneeANSI}$$

The current transformers must have a knee-point voltage $U_{kneeANSI}$ that fulfills the following:

$$1.3 \cdot U_{kneeANSI} > \text{maximum of } E_{alreq}$$

2 Remote communication

The terminal is provided with the following three serial ports:

- serial port on the front of the terminal. This port is always included in the delivery.
- serial SPA port (optional) at the rear of the terminal, intended for connection to SMS.
- serial LON port (optional) at the rear of the terminal, intended for connection to SCS.

2.1 Hardware requirements

2.1.1 Front port

This port is intended for temporary connection of a PC. For this connection a special interface cable intended for this purpose must be used. For ordering No please refer to the for RET 521 technical overview brochure.

2.1.2 Ports at the rear of the terminal

These ports are intended for connection of optical fibres and can be delivered for plastic or glass fibre.

Plastic fibre:

Connector: snap-in type

Glass fibre:

Connector: bayonet type ST

2.2 Software requirements

2.2.1 Product engineering tools

- CAP 540*1.2 or later

2.2.2 SMS

- SMS 510*1.0 or later + service pac 1 or later
- RECOM*1.4 or later
- REVAL*2.0 or later

3 Time synchronisation

The real time clock in the RET 521 terminal can be synchronised in three different ways:

- via the SPA communication link normally from SMS
- via the LON communication link normally from SCS
- via minute pulses to a binary input.

Since the synchronisation via the serial buses is part of SCS and SMS and is harmonised with the terminal, the requirements on this synchronisation are not dealt with here.

The requirements on the minute pulses are:

- correct voltage according to the rating of the binary input
- the pulse must have a duration of minimum 5 ms and maximum 100 ms
- rise time maximum 1ms
- absolute bounce free pulse

The chapter “Configuration and settings”

This chapter deals with how the terminal can be configurated and how to generate setting values. The different software tools that can be used is also presentated.

Introduction

The CAP 540 configuration and setting tool contains:

- CAP 531 v1.5 configuration tool. Use CAP 531 to configure the functions and logics of the terminal.
- PST parameter setting tool. Use PST to set parameters (settings) of the terminal.

All parameter settings can be made in these ways:

- Locally, by means of the local human-machine interface (HMI).
- Locally, by means of a PC, using the Parameter Setting Tool (PST) in CAP 535 or using the Station Monitoring System (SMS) .
- Remotely, by means of the Parameter Setting Tool (PST) in the Station Control System (SCS).
- Remotely, by means of the Station Monitoring System (SMS).

These software modules for configuration and setting are available for RET 521:

- The CAP 540 software package is used to configure the terminal regarding function block and logic connections and for parameter setting. CAP 540 is common for the REx 5xx and RET 521 terminals.
- The HV/REx 5xx, included in the LIB 520 library, is used for parameter setting and event handling, in MicroSCADA applications, of the terminal RET 521.

The HV/Control software module, included in the MicroSCADA library LIB 520, is intended to be used for control functions in REx 5xx terminals. The software module includes a part regarding voltage control, which is intended to be used together with the voltage control function in RET 521. That part contains the process picture, dialogues and process database for the voltage control application in the MicroSCADA.

Configuration

1 CAP 531

1.1 Product overview

The **C**onfiguration **a**nd **P**rogramming tool **CAP 531** enables configuration management, programming, and error detection and correction for REx 5xx terminals.

1.2 Operating environment

CAP 531, v1.5 which is part of CAP 535, runs under MS Windows 95/98 or NT. For Windows 95 and NT, version 4 or later is recommended. You should be familiar with these programs, which let you perform actions such as drag and drop, zoom, and scroll.

1.3 IEC 1131 programming

The IEC 1131 standard includes several graphical and textual programming languages. The CAP 531 function block diagram (FBD) is one of the IEC 1131 languages.

FBD is a graphical language. It is a widely used programming language that is used to create complicated networks with functions or function blocks. Networks are created with lines that connect or duplicate information.

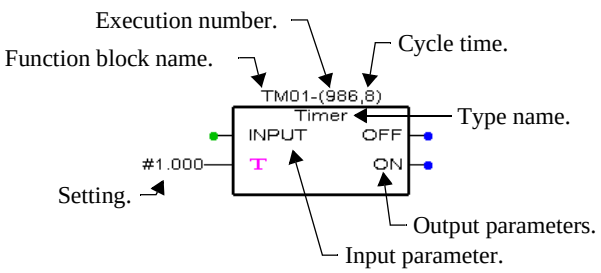

Fig. 1 Function block in the CAP 531 work sheet.

In CAP 531, all the functions in a terminal are called function blocks. A function block includes input and output parameters, a type name, and function block name.
See Fig. 1 .

A function that is represented as a function block in CAP 531 can be a:

- protection function
- control function
- monitoring function
- logic function

The function block name makes the function block unique. Cycle time is the time between executions (8 ms in Fig. 1).

Each function block has an execution number (986 in Fig. 1). The execution number tells you in which order the function blocks are executed.

Example: Function blocks with cycle time 8 ms are executed in the terminal every 8 ms and execution number 986 is executed after execution number 985. All function blocks with this cycle time are executed within a period of 8 ms.

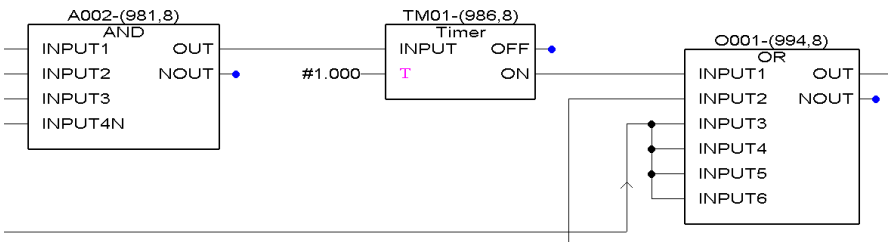

Fig. 2 Function block diagram.

Some settings are done in CAP 531. They are presented as inputs with magenta colour.

In Fig. 2 the Timer function block has a setting of a delay time set to 1.000 seconds. A setting can be both numbers (as for a timer) or names.

Note !

Ensure that the function blocks in the configuration are executed consecutively to minimize delay. Select the logical function blocks (AND, OR etc.) in rising order, from left to right in the work sheet.

1.4 CAP 531 documentation

The CAP 531 user's guide consists of these main parts:

Item:	Description:
Installation	Installation instruction.
Help	Instructions of how to use the help function.
Tutorial	Shows how to use CAP 531 with a mouse. Use this to learn how a project is run with CAP 531. The Tutorial goes through the normal procedures of a project.
Keyboard	Shows how to use CAP 531 with a keyboard.
General Project Tree Work Sheet Page Layout	Describes all parts of CAP 531. It contains the main topics in the context-sensitive help.

There is also an on-line context-sensitive help in the program. Press **<F1>** from anywhere in CAP 531 to get detailed reference information about all of CAP 531.

Setting

2 PST

2.1 Product overview

The Parameter Setting Tool (PST) is a tool for managing parameters for protection and control terminals and relays.You can read the parameters from the terminal, edit the parameter values and write the parameter values to the terminal. You can also edit the parameters in advance and later, when the terminal is available, write the parameters to the terminal.

PST is delivered as a part of the selected navigation environment. Supported navigation environments are CAP 531, v.1.4 and MicroSCADA. The combination of CAP 531 and PST is denoted CAP 535.

Since PST also supports communication via telephone modems, it gives the possibility to “travel” to the station by communication link, making physical presence in the station unnecessary.

2.2 Operating environment

PST is primarily a MS Windows NT application intended to run on a standard PC. The application is also available for Windows 95/98. PST can also be installed as a one-place application as well as a client-server application in a LAN network of computers.

2.3 Functionality

Terminal parameter setting and supervision, sometimes also called protection/control monitoring, lets the user display information and change settings from a PC in the same way as from the built-in HMI (Human-Machine-Interface) on the front of the terminal.

2.4 PST documentation

The PST user's manual consists of these main parts:

Table 1:

Item:	Description:
Instructions	Instructions for: • Installation. • Setup of conmmunication. • Change of parameter values • Compare PST parameters with terminal values • Read and write parameters to/from the terminal. • Graphical User Interface (GUI).
Appendix	Glossary and references to Users Manuals.

See also "Reference publications" on page 229.

3 HV/RET 521

3.1 Product overview

HV/RET 521 is intended for parameter setting and event handling, in MicroSCADA applications, of the corresponding RET 521 terminal.

The HV/RET 521 software module is included in the LIB 520 high-voltage process package, which is a part of the Application Software Library within MicroSCADA applications. The information presented on the MicroSCADA screen is similar to the presentation of the Station Monitoring System (SMS).

The HV/RET 521 software consists of three functional parts:

- Read terminal information
- Change terminal settings
- Handling of spontaneous events for presentation in lists

3.2 Operating environment

The software runs on a PC system using operating system Windows/NT 4.0. To run the HV/RET 521 software, also the MicroSCADA packages MicroSYS rev. 8.4.3, Micro-TOOL rev. 8.4.3, LIB 500 rev. 4.0.3 and LIB 510 rev. 4.0.3 (SPA-TOOL) or later must be available.

3.3 Functionality

Protection parameter setting and supervision, sometimes also called protection monitoring, lets the user display information and change settings from a MicroSCADA system in the same way as from the built-in HMI (Human-Machine-Interface) on the front of the terminal.

There are also information available only by using HV/RET 521 and MicroSCADA, such as time tagged disturbance reports.

3.4 HV/RET 521 documentation

The HV/RET 521 user's manual consists of these main parts:

Item:	Description:
Instructions	Installation instruction.
Technical description	Describes the general functionality and graphical representation for these functions: • Data groups • Password handling • Event tool
Appendix	Includes a complete file listing, list of process objects and updated files.

See also "Reference publications" on page 229.

4 HV/Control

4.1 Product overview

The HV/Control software module is intended to be used for control functions in REx 5xx terminals. The software module includes parts intended to be used together with the voltage control function in RET 521. These parts contain the process picture, dialogues and process database for the application in the MicroSCADA.

The HV/Control software module is included in the LIB 520 high-voltage process package, which is a part of the Application Software Library within MicroSCADA applications.

The HV/Control software consists of these functional parts:

- HV General bay
- HV Breaker, Disconnector and Earthing switch
- Overview Bay
- HV Measurement
- HV REx 5xx Supervision

HV Measurement and HV REx 5xx Supervision can be used for RET 521.

4.2 Operating environment

The software runs on a PC system using operating system Windows/NT 4.0. To run the HV/Control software, also the MicroSCADA packages MicroSYS rev. 8.4.3, MicroTOOL rev. 8.4.3, LIB 500 rev. 4.0.3 or later must be available.

4.3 Functionality

HV/Control is mainly used to handle control and supervision functions via a process picture in MicroSCADA applications. The control function consists of open/close commands of high-voltage apparatuses including corresponding position indications. The commands are performed from a control dialogue window, which is automatically displayed when the device to be controlled is selected. Within the control dialogue also other features are available such as e.g. blocking functions and remote/station handling.

4.4 HV/Control documentation

The HV/Control user's manual consists of these main parts:

Item:	Description:
Instructions	Installation instruction.
Technical descrip-tionl	Describes the general functionality and graphical representation for these functions: • HV General bay • HV Breaker, Disconnector and Earthing switch • Overview Bay • HV Measurement • HV REx 5xx Supervision
Appendix	Files, such as format pictures, dialogue pictures, text files and help files are listed here.

See also "Reference publications" on page 229.

5 Human machine interface (HMI)

5.1 General

The built-in human machine interface (HMI) provides local communication between the user and the terminal.

The built-in HMI module is located on the front of the terminal and consists of three LEDs, an LCD display with four lines, each containing 16 characters, six buttons and an optical connector for PC communication.

5.2 Functionality

These main menus for status reading and parameter setting are available:

- **Disturbance report**, gives the user all information recorded by the terminal for the last 10 disturbances (optional).
- **Service report**, displays information about the operating conditions and information about the terminal.
- **Settings**, is used to set different parameters within the built-in functions.
- **Terminal status**, displays self supervision information and terminal ID.
- **Configuration**, is used to tailor the configuration of the terminal regarding e.g. communication, time synchronisation, identifiers (IDs). Configuration of functions is performed from the CAP 531 configuration tool.
- **Command**, is used to activate different output signals for performance of various commands in the terminal.
- **Test**, is used to make secondary injection testing of the terminal as easy as possible.

For more details, see Operators Manual.

6 Power transformer data

Because all protection algorithms in RET 521 do all calculations in primary system quantities, and all settings are related to the rated quantities of the protected power transformer it is extremely important to properly set the data about protected transformer. Required data can be easily found on transformer name plate. These data are normally set by the commissioner using the built-in HMI or SMS/SCS.

Please note that all data need to be set. Rated voltage values, as an example, are required even when there is no over-/undervoltage functions installed, because the transformer differential protection function uses these values to calculate the turns ratio of the power transformer.

Note: The power transformer data is part of the functions found under setting groups 1-4, functions that are managed in four separately configurable groups for extended flexibilty. Depending on which group is used for setting, *n* ranges from 1-4. If the protection scheme requires more than one setting group, transformer data must be copied to or set for each used setting group.

6.1 Basic transformer data

When using the built-in HMI, basic transformer data can be set using the menu branch:

Settings
Functions
Group *n*
TransfData
Basic Data

Table 2: Basic transformer data, two winding transformer

Parameter description	Parameter name	Range	Default
Transformer Vector Group	VectorGroup 2W	See Fig. 3	Yy00
Rated Transformer Power in MVA	Sr	0.1-9999.9	173.2

In a three winding transformer system, the rated power is set for each winding, thus excluded from the basic data.

Table 3: Basic transformer data, three winding transformer

Parameter description	Parameter name	Range	Default
Transformer Vector Group	VectorGroup 3W	See Fig. 4	Yy00y00

6.1.1 Vector group setting strings

When setting the vector group, a number between 1 and 24 (two winding transformer) or between 1 and 288 (three winding transformer) is entered, corresponding to a certain vector group. When viewing the set vector group a three or four character string, constructed by combining the primary winding coupling (Y or D) with a vector code for the secondary winding, is displayed instead of the number.The following illustrations displays the correspondance between entered number and vector groups.

	W2 (Secondary Winding)											
W1=Y	y00	y02	y04	y06	y08	y10	d01	d03	d05	d07	d09	d11
(Primary Winding)	1	2	3	4	5	6	7	8	9	10	11	12

Settings for Vector Group No for Two Winding Power Transformers with Star Connected Primary Winding

	W2 (Secondary Winding)											
W1=D	y01	y03	y05	y07	y09	y11	d00	d02	d04	d06	d08	d10
(Primary Winding)	13	14	15	16	17	18	19	20	21	22	23	24

Settings for Vector Group No for Two Winding Power Transformers with Delta Connected Primary Winding

99000001.ppt

Fig. 3 Vector group reference table for two winding systems

W1=Y (Primary Winding)		W3 (Tertiary Winding)											
		y00	y02	y04	y06	y08	y10	d01	d03	d05	d07	d09	d11
	y00	1	2	3	4	5	6	7	8	9	10	11	12
W2	y02	13	14	15	16	17	18	19	20	21	22	23	24
	y04	25	26	27	28	29	30	31	32	33	34	35	36
Sec	y06	37	38	39	40	41	42	43	44	45	46	47	48
	y08	49	50	51	52	53	54	55	56	57	58	59	60
W	y10	61	62	63	64	65	66	67	68	69	70	71	72
i	d01	73	74	75	76	77	78	79	80	81	82	83	84
n	d03	85	86	87	88	89	90	91	92	93	94	95	96
d	d05	97	98	99	100	101	102	103	104	105	106	107	108
i	d07	109	110	111	112	113	114	115	116	117	118	119	120
n	d09	121	122	123	124	125	126	127	128	129	130	131	132
g	d11	133	134	135	136	137	138	139	140	141	142	143	144

Settings for Vector Group No for Three Winding Power Transformers with Star Connected Primary Winding

W1=D (Primary Winding)		W3 (Tertiary Winding)											
		y01	y03	y05	y07	y09	y11	d00	d02	d04	d06	d08	d10
	y01	145	146	147	148	149	150	151	152	153	154	155	156
W2	y03	157	158	159	160	161	162	163	164	165	166	167	168
	y05	169	170	171	172	173	174	175	176	177	178	179	180
Sec	y07	181	182	183	184	185	186	187	188	189	190	191	192
	y09	193	194	195	196	197	198	199	200	201	202	203	204
W	y11	205	206	207	208	209	210	211	212	213	214	215	216
i	d00	217	218	219	220	221	222	223	224	225	226	227	228
n	d02	229	230	231	232	233	234	235	236	237	238	239	240
d	d04	241	242	243	244	245	246	247	248	249	250	251	252
i	d06	253	254	255	256	257	258	259	260	261	262	263	264
n	d08	265	266	267	268	269	270	271	272	273	274	275	276
g	d10	277	278	279	280	281	282	283	284	285	286	287	288

Settings for Vector Group No for Three Winding Power Transformers with Delta Connected Primary Winding

99000003.ppt

Fig. 4 Vector group reference table for three winding systems

6.2 Two winding transformer system

Primary winding data is set using the menu branch:

Settings
Functions
Group *n*
TransfData
Winding 1

Table 4: Primary winding transformer data

Parameter description	Parameter name	Range	Default
Rated Current for Primary Winding in A	Ir1	1-99999	1000
Rated Phase to Phase Voltage for Primary Winding in kV	Ur1	0.1-999.9	100.0

Secondary winding data is set using the menu branch:

Settings
Functions
Group *n*
TransfData
Winding 2

Table 5: Secondary winding data

Parameter description	Parameter name	Range	Default
Rated Current for Secondary Winding in A	Ir2	1-99999	1000
Rated Phase to Phase Voltage for Secondary Winding in kV	Ur2	0.1-999.9	100.0

6.3 Three winding transformer systems

When the terminal is intended for protection of a three winding transformer, the parameters are somewhat different. Primary winding data is set using the HMI menu branch:

Settings
Functions
Group *n*
TransfData
Winding 1

Table 6: Three winding transformer data, primary winding

Parameter Description	Parameter Name	Range	Default
Rated Power of Primary Winding in MVA	Sr1	0.1-9999.9	173.2
Rated Current for Primary Winding in A	Ir1	1-99999	1000
Rated Phase to Phase Voltage for Primary Winding in kV	Ur1	0.1-999.9	100.0

Secondary winding data is set using the HMI menu branch:

Settings
Functions
Group *n*
TransfData
Winding 2

Table 7: Three winding transformer data, secondary winding

Parameter Description	Parameter Name	Range	Default
Rated Power of Secondary Winding in MVA	Sr2	0.1-9999.9	173.2
Rated Current for Secondary Winding in A	Ir2	1-99999	1000
Rated Phase to Phase Voltage for Primary Winding in kV	Ur2	0.1-999.9	100.0

Tertiary winding data is set using the HMI branch:

Settings
Functions
Group *n*
TransfData
Winding 3

Table 8: Three winding transformer data, tertiary winding

Parameter Description	Parameter Name	Range	Default
Rated Power of Tertiary Winding in MVA	Sr3	0.1-9999.9	173.2
Rated Current for Tertiary Winding in A	Ir3	1-99999	1000
Rated Phase to Phase Voltage for Primary Winding in kV	Ur3	0.1-999.9	100.0

7 Current and voltage transformer data

Because all protection algorithms in RET 521 are calculated using the primary system quantities it is extremely important to properly set the data about connected current and voltage transformers. These data are calculated by the system engineer and normally set by the commissioner from the built-in HMI or from SMS.

The following data need to be set for every voltage transformer connected to RET 521:

Table 9: Voltage transformer settings

Parameter description	Parameter name	Range	Default
Rated VT primary voltage in kV	VTprim	0.1-999.9	100
Rated VT secondary voltage in Volts	VTsec	1-999	100

It should be noted that in case of phase to earth voltage measurement with the following VT data,

$$\frac{132\ \mathrm{kV}/\sqrt{3}}{110\ \mathrm{V}/\sqrt{3}}$$

the following settings should be used:

VTprim = 132kV

VTsec = 110V

The following data need to be set for every current transformer connected to RET 521:

Table 10: Current transformer settings

Parameter Description	Parameter name	Range	Default
Rated CT primary current in A	CTprim	1-99999	1000
Rated CT secondary current in A	CTsec	1-5	1
Used input tap for CT on AIM card	InputCTTap	Input 1A or Input 5A	Input 1A
Current transformer staring (i.e. current direction)	CTstarpoint	ToObject, FromObject	ToObject

The first two parameters define the CT ratio.

The third parameter *"InputCTTap"* is used to determine to which tap, on RET 521 input terminals, the wire from the main CT is connected. For more info about that see figure 5. It should be noted that this parameter can be only set from the built-in HMI.

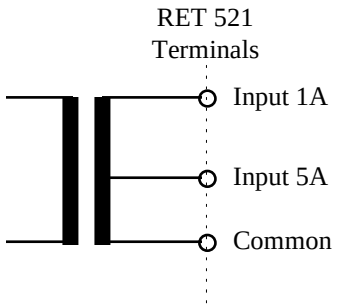

Fig. 5 CT Connections to RET 521

Parameter *"CTstarpoint"* determines in which direction current is measured. Internal reference direction is that all currents are always measured towards the protected object (i.e. towards the power transformer).

An example for setup of all CT parameters is shown in figure 6.

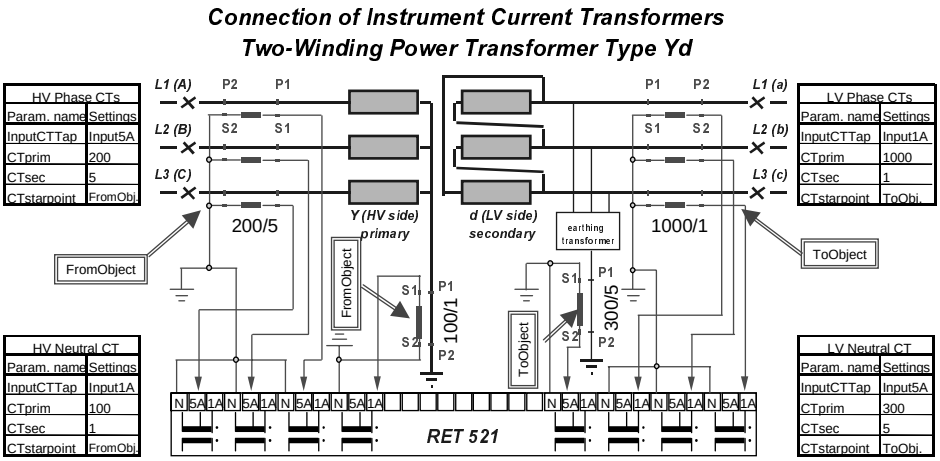

Fig. 6 CT Setup Example

When the configuration parameters of the CTs are made according to these instructions, functions depending on the direction of the current, will automatically be set up correctly. That means that the differential protection now is set up correctly.

Other directional protections as directional overcurrent protection or directional earth fault protection also need to know on which side of the power transformer they are configured. That information is given in the configuration parameter “Side2w” or “Side3w”. Now the directionality is set up so that the setting “*forward”* means the direction out from the transformer into the surrounding network and vice versa for the ”*reverse”* setting. The same directions apply as well when configuration parameter “Side2w” or “Side3w” is set to “UserDefined”.

Reference publications

User’s manual CAP 540*1.2, 1MRK 511 112-UEN

User´s manual CAP 531*1.6, 1MRK 511 105-UEN

PST*1.2 Parameter Setting Tool, User’s Manual 1MRK 511 114-UEN

REVAL*2.0, User’s Manual 1MRK 002 203-AA

User’s manual HV/Control*2.5, 1MRK 511 118-UEN

User’s manual HV/REx 5xx*4.0, 1MRK 511 119-UEN

Technical Overview Brochure RET 521*2.5, 1MRK 504 035-BEN

LonTalk protocol specification, EIA-709.1

LNT 505, LON Configuration Tool, 1MRS 151 400

SLDT, LON configuration module REx 500, 1MRK 001 700-9

Product:

ABB Automation Technology Products AB would appreciate your comments on this product. Please grade the following questions by selecting one alternative per category. Your answer will enables us to improve our products.

How do you grade the quality of the product?

	Excellent				Poor
Total impression	☐	☐	☐	☐	☐
Useability	☐	☐	☐	☐	☐
Functionality	☐	☐	☐	☐	☐
Human-machine interface	☐	☐	☐	☐	☐

Comments: _____

_____

_____

Remove from binder

How do you grade the quality of the documentation?

	Excellent				Poor
Total impression	☐	☐	☐	☐	☐
Layout	☐	☐	☐	☐	☐
Illustrations	☐	☐	☐	☐	☐
Readability	☐	☐	☐	☐	☐
Easy to find	☐	☐	☐	☐	☐
Content structure	☐	☐	☐	☐	☐

Comments: _____

_____

_____

Suggestions for improvements:

Remove from binder

Please send this report to:

ABB Automation Technology Products AB
Substation Automation
ATCE/SA,Support Line
SE-721 59 Västerås
Sweden
Facsimile: +46 (0) 21 14 69 18

Differential protection schemes for autotransformers

1. Introduction

In modern HV and EHV networks is common to find (big) autotransformers that interconnect two power system networks. They often have the tertiary delta winding in order to balance the zero sequence current flow during the fault conditions. Sometimes, in order to limit the physical size of the autotransformer, the three-phase autotransformer is made from three single-phase units.

The protection requirements for these autotransformers may differ from utility to utility, but it is often required to provide two independent differential protection schemes in order to provide the best possible protection to the unit.

This document explains the different differential protection schemes which can be offered by ABB Automation Products AB / Substation Automation Division in order to fulfill the client requirements. Exactly which type of scheme will be offered depend on the client requirements, availability of main CTs and available budget.

2. Overall biased differential protection

This differential protection is very similar to the normal transformer differential protection. It is based on the ampere-turn balance of the currents of all three windings. The blocking facility against inrush currents and over-excitation (i.e. 2nd & 5th harmonic blocking) is definitely required for this type of differential protection. This application is shown in Fig. 1.

This functionality is easily obtained by the three-winding differential function (i.e. DIFP function) in RET 521 terminal (Version 2p3). The care shall be taken where tertiary winding CTs are located. They can be located in two locations:

1. outside the delta winding
2. in series with the delta winding (i.e. when bushing CTs are used in case of three single-phase transformer units)

When the CTs are located outside the delta winding, the autotransformer vector group is set as Yy00d?? (i.e. Yy00d01 or Yy00d11 depending on the delta winding connections) and the data for autotransformer windings under settings for “Power Transformer Data”

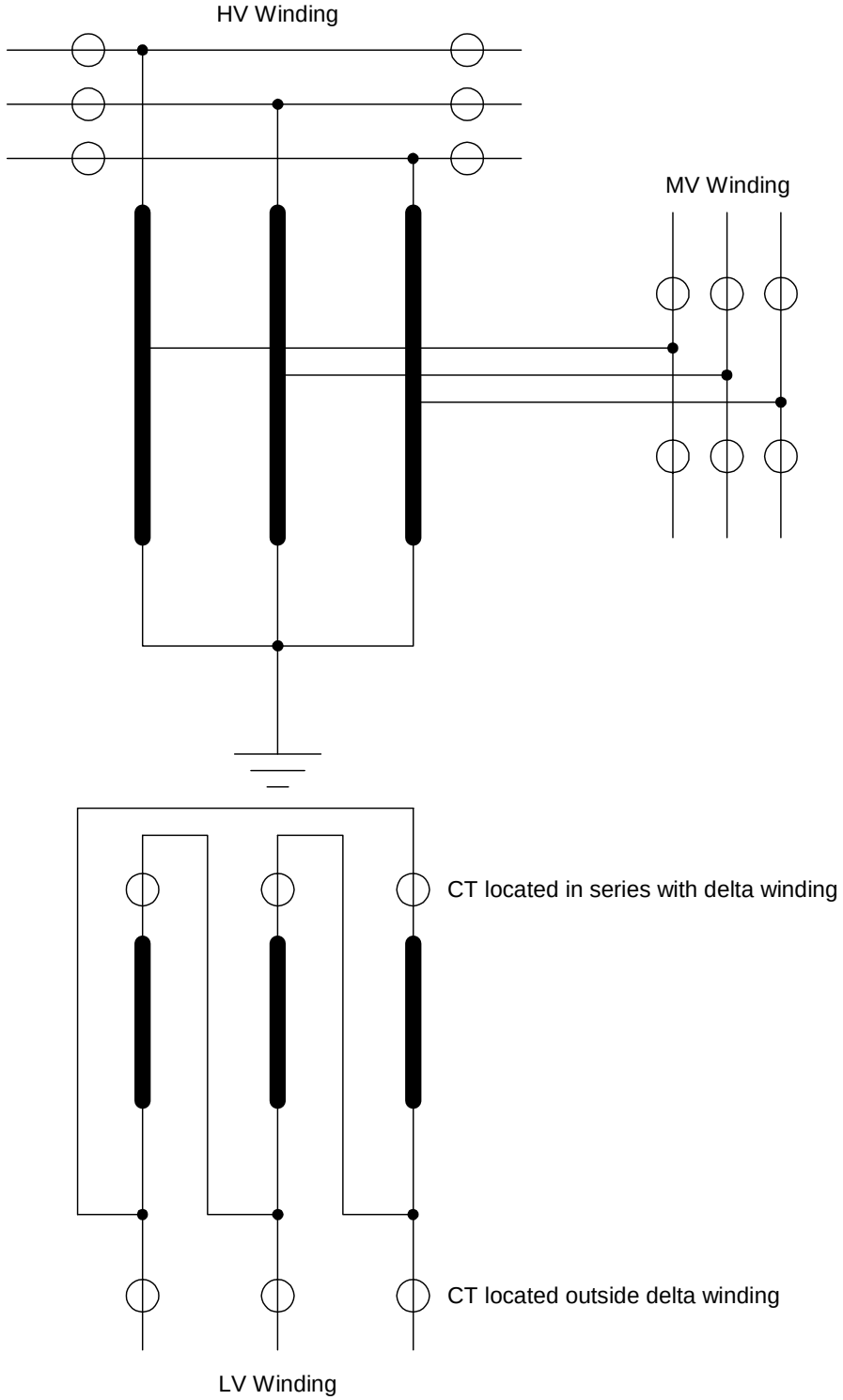

Figure 1: Application of bias differential protection for an autotransformer

are set in the same way as for normal power transformer (i.e. directly from the transformer nameplate). This means that the power for tertiary winding Sr3 is set to rated three-phase power of the tertiary delta winding, the voltage for tertiary winding Ur3 is set to the rated phase-to-phase voltage of the tertiary side and the current for tertiary winding Ir3 is set as per the following formula:

Ir3=Sr3/(sqrt(3)*Ur3)

However, when the CTs are located in series with the delta winding, the autotransformer vector group has to be set as Yy00y00 (i.e. measured primary secondary and tertiary currents are in phase). In the same time under settings for “Power Transformer Data” the data for the tertiary winding have to be change in the following way:

Sr3 same as above (i.e. no change)

Ur3 for 1.732 times higher than above (i.e. sqrt(3)*Ur3)

Ir3 for 1.732 times lower than above (i.e. Ir3/sqrt(3))

3. Current differential protection for common and serial windings of an autotransformer

Traditionally three-phase high impedance differential relay was used for this application (i.e. RADHA). This differential protection principle is similar to the busbar differential protection. The differential protection is phase segregated and it is based on the First Kirchhoff’s Law (i.e. sum of all currents entering one electrical node is equal to zero).

In order to use this scheme the main CTs have to be located in all three phases at the autotransformer neutral and in HV and MV terminals. Refer to the Fig. 2 for the application principles. Second harmonic or fifth harmonic stabilization is not necessary with full differential measurement as in this application. It shall be noted that a common CT in the autotransformer neutral is not acceptable.

This scheme protects the serial and the common winding of the autotransformer against all kinds of phase-to-phase and phase-to-ground faults. Actually it has much better sensitivity for the ground faults close to the autotransformer neutral than the bias differential scheme described above. However this scheme does not protect the serial and common winding of the autotransformer against turn-to-turn faults. It as well does not protect at all the tertiary delta winding of the autotransformer.

This functionality can be achieved with RED 521 terminal (Version 1p0) or by using the three-winding differential protection function (i.e. DIFP) in RET 521 terminal (Version 2p3).

It shall be noted that for both solutions it is possible to have two CT inputs from HV and MV autotransformer windings. Therefore one-and-half CB switchgear arrangement can be easily accommodated on HV and MV side of the autotransformer (i.e. as shown in Fig 1).

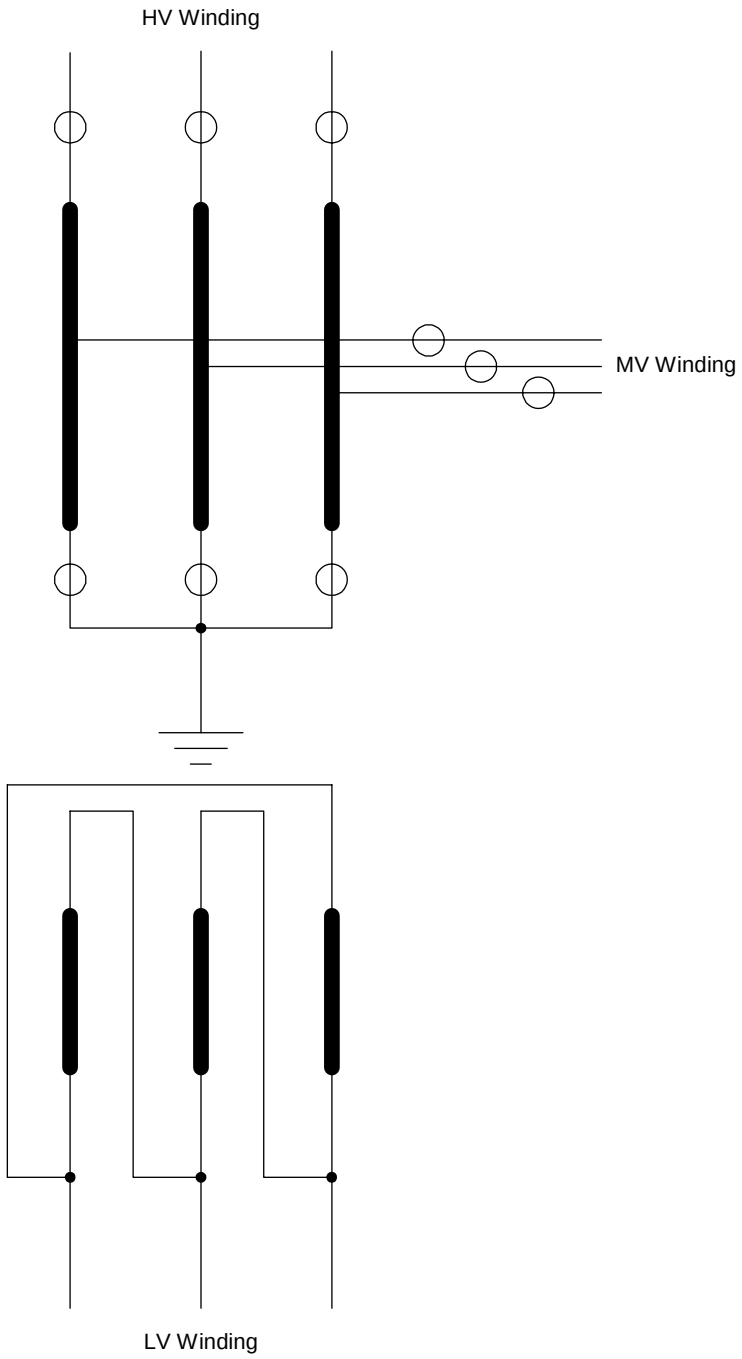

Figure 2: Application of current differential protection for common and serial windings of an autotransformer

The advantage with the RED 521 terminal is the flexibility to accept different CT ratios, insensitivity to turns correction in the main CTs and very fast operation in case of an internal fault (less than one power system cycle).

The advantage with RET 521 is the flexibility to accept different CT ratios, insensitivity to turns correction in the main CTs and possibility to include the additional protection functions like overcurrent or earth fault as well as disturbance recording facilities. The tripping times are in order of 1.5 to 2 power system cycles.

However, it shall be noted that when RET 521 is used, some special settings for the power transformer data and for DIFP function have to be done in order to obtain required functionality. The special settings required under “Power Transformer Data” are:

- Vector group have to be set as Dd00d00
- Rated power for all three windings have to be set to the same value

  (i.e. Sr1=Sr2=Sr3=rated power of the autotransformer MV winding)
- Rated voltages for all three windings have to be set to the same value

  (i.e. Ur1=Ur2=Ur3=rated phase-to-phase voltage of one of the three windings, when some voltage function is used on one of the three sides then that side rated voltage have to be entered)
- Rated currents for all three windings have to be set to the same value

  (i.e. Ir1=Ir2=Ir3=rated current of MV autotransformer winding)

The required settings under “Differential Protection/Basic” are:

- Zero-sequence current deduction shall be set to “Off”.
- Cross-blocking feature shall be set to “Off”.
- Second harmonic blocking shall be set to 20%
- Fifth harmonic blocking shall be set to 50%

Due to these special settings for this type of application, it might be difficult to use some other voltage functions in RET 521 terminal like overvoltage, undervoltage, overexcitation and voltage control functions. Care shall be taken about pickup settings of overcurrent and earth fault functions as well.

It should be noted that the RED 521 has different filtering and measuring technique than RET 521. Therefore with RET 521 as bias differential protection and RED 521 as current differential protection the requirement for two completely different measuring techniques can be fulfilled.

4. Restricted earth-fault protection for common and serial windings of an autotransformer

Traditionally single-phase high impedance differential relay (i.e. RADHD) was used for this application. This differential protection is based on the First Kirchhoff's Law applied to the zero sequence currents only (i.e. sum of all zero-sequence currents entering one electrical node shall be equal to zero).

In order to use this scheme only one common CT in the autotransformer neutral is required, but still the three phase main CTs at the autotransformer HV and MV terminals

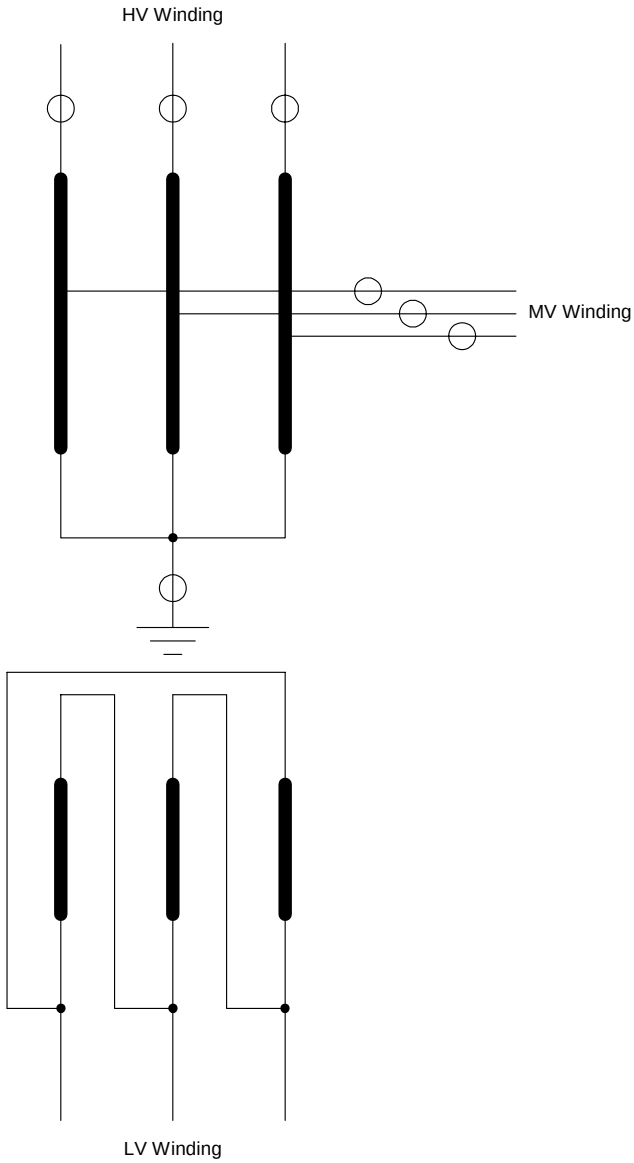

Figure 3: Application of restricted earth fault protection for common and serial windings of an autotransformer

are necessary. Refer to the Fig. 3 for the application principles. Second harmonic or fifth harmonic stabilization is not necessary with full zero-sequence differential current measurement as in this application.

This scheme protects the serial and the common winding of the autotransformer against all kinds of phase-to-ground faults. It has very good sensitivity for the ground faults close to the autotransformer neutral. However this scheme does not protect the serial and common winding of the autotransformer against internal phase-to-phase or turn-to-turn faults. It as well does not at all protect the tertiary delta winding of the autotransformer.

This functionality can be achieved with RET 521 terminal (Version 2p3) by utilizing one restricted earth-fault function (i.e. REF1). The advantage with the REF function is the flexibility to accept different CT ratios, insensitivity to turns correction in the main CTs and very fast operation in case of an internal ground fault (usually around one power system cycle).

However it shall be noted that for this application of RET 521 it is not possible to have two CT inputs from either HV or MV autotransformer winding. Therefore if one-and-half CB switchgear arrangement is used on any of these two sides of the autotransformers the bushing CTs have to be used to achieve this functionality.

The advantage of this application with RET 521 is that the power transformer data should be set in the usual way as already explained for bias differential functionality.

It is recommended to use the following settings for the restricted earth fault function:

- Set parameter ”SIDE” on the REF function block in CAP tool to 2 (i.e. MV winding)
- Set parameter ”Idmin” under settings for the REF function to 30%
- Set parameter ”roa” under settings for the REF function to 60 degrees

5. Conclusion

The following solutions can be offered by ABB when two differential functions are required by the client for protection of an autotransformer:

1. Only one RET 521 terminal with three-winding DIFP function as bias differential protection for the autotransformer and REF1 function as restricted earth fault protection for serial and common windings of the autotransformer. Care shall be taken that this protection scheme set-up can not be used when one-and-half switchgear is used on HV and MV side of the autotransformer.
2. One RET 521 terminal with three-winding DIFP function as bias differential protection for the autotransformer and second RET 521 terminal with REF1 function as restricted earth fault protection for serial and common windings of the autotransformer. In this case only bias differential function can use the CTs located in the switchgear for one-and-half CB stations, while the restricted earth fault terminal have to use the autotransformer bushing CTs.
3. One RET 521 terminal with three-winding DIFP function as bias differential protection for the autotransformer and second RET 521 terminal with three-winding DIFP function as current differential protection for serial and common windings of the autotransformer. No limitations regarding the one-and-half CB station exist for this protection set-up.
4. One RET 521 terminal with three-winding DIFP function as bias differential protection for the autotransformer and one RED 521 terminal as current differential protection for serial and common windings of the autotransformer. No limitations regarding the one-and-half CB station exist for this protection set-up.

Protection schemes for shunt reactors with RET 521

1. Introduction

In modern HV and EHV networks shunt reactors are more and more used. They are used in order to compensate for the capacitive shunt reactance of transmission lines. Usually they are solidly grounded in the star point. Sometimes, in order to limit the physical size of the shunt reactor, the three-phase reactor is made from three single-phase units.

This document explains the possible protection schemes with RET 521 which can be offered by ABB Automation Products AB / Substation Automation Division in order to fulfill the client requirements for shunt reactor protection scheme.

2. Current differential protection for shunt reactor

Traditionally three-phase high impedance differential relay was used for this application (i.e. RADHA). This differential protection principle is similar to the busbar differential protection. It is phase segregated and it is based on the First Kirchhoff's Law (i.e. sum of all currents entering one electrical node is equal to zero).

In order to use this scheme the main CTs have to be located in all three phases at the shunt reactor neutral and in HV terminals. Refer to the Fig. 1 for the application principles. Second harmonic or fifth harmonic stabilization shall not be necessary with full differential measurement as in this application. However it is often necessary to utilize 2nd harmonic blocking in order to restrain DIFP function from possible maloperation when reactor is energized, due to long lasting dc component in the primary current. It shall be noted that a common CT in the shunt reactor neutral point cannot be used for the differential function.

This scheme protects the shunt reactor against all kinds of phase-to-phase and phase-to-earth faults. However this scheme does not protect the shunt reactor against turn-to-turn faults.

This functionality can be easily achieved by using the two-winding differential protection function (i.e. DIFP) in RET 521 terminal.

It shall be noted that is possible to have two CT inputs from HV terminal side. Therefore one-and-half CB switchgear arrangement can be easily accommodated.

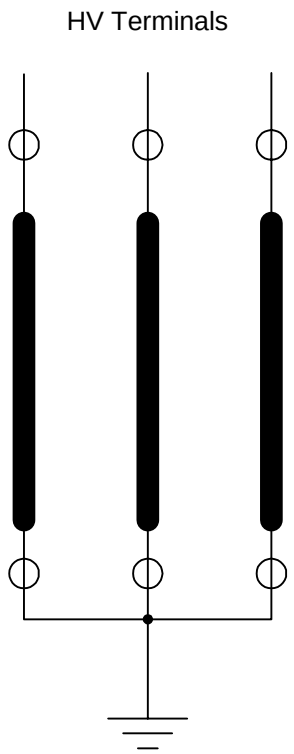

Figure 1:Typical CT locations for current differential protection of shunt reactor

The advantage with RET 521 is the flexibility to accept different CT ratios, insensitivity to turns correction in the main CTs and possibility to include the additional protection functions like over-current, earth-fault, over-voltage etc. as well as disturbance recording facilities. The tripping times are in order of 1.5 to 2 power system cycles.

However, it shall be noted that when RET 521 is used in this application, the following settings are required for “Power Transformer Data”:

- Vector group have to be set as Dd00
- Rated power (i.e. Sr) should be set equal to the rated power of the shunt reactor
- Rated voltages for both windings have to be set to the same value

  (i.e. Ur1=Ur2=rated phase-to-phase voltage of the shunt reactor)
- Rated currents for both windings have to be set to the same value

  (i.e. Ir1=Ir2=rated current of the shunt reactor)

The recommended settings for “Differential Protection/Basic” are:

- “CaractNo” parameter shall be set to 3
- ”Idmin” parameter shall be typically set to 15%
- ”Idunre” shall be typically set to 200%
  (much higher value is recommended for 1½ CB stations)
- “StandByOption” parameter shall be set to “Always”
- Second harmonic blocking shall be set to 10%
- Fifth harmonic blocking shall be set to 50%
- Zero-sequence current deduction shall be set to “Off”.
- Cross-blocking feature shall be set to “Off”.

3. Restricted earth-fault protection for shunt reactor

Traditionally single-phase high impedance differential relay (i.e. RADHD) was used for this application. This differential protection is based on the First Kirchhoff's Law applied to the zero sequence currents only (i.e. sum of all zero-sequence currents entering one electrical node shall be equal to zero).

In order to use this scheme only one common CT in the shunt reactor neutral is required, but still the three-phase main CTs at the HV terminals are necessary. Refer to the Fig. 2 for the application principles.

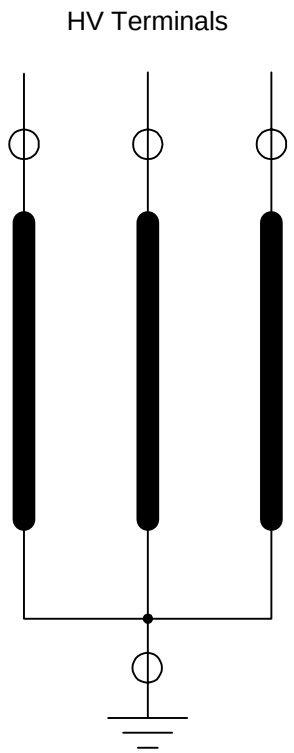

Figure 2: Typical CT locations for restricted earth fault protection of shunt reactor

This scheme protects the shunt reactor against all kinds of phase-to-earth faults. However this scheme does not protect the shunt reactor winding against internal phase-to-phase or turn-to-turn faults.

The restricted earth-fault functionality can be achieved with RET 521 terminal (Version 2p3) by utilizing one restricted earth-fault function (for example REF1). The advantage with the REF function is the flexibility to accept different CT ratios, insensitivity to turns correction in the main CTs, very fast operation in case of an internal ground fault (usually around one power system cycle) and ability to include the additional protection functions like over-current or earth fault as well as disturbance recording facilities.

For this application the power transformer data should be set in the same way as already explained for current differential function.

It is recommended to use the following settings for the restricted earth fault function:

- Set parameter ”SIDE” on the REF function block in CAP tool to 1
- Set parameter ”Idmin” under settings for the REF function to 20%
- Set parameter ”roa” under settings for the REF function to 75 degrees

4. Additional protection functions for shunt reactor

As additional protections over-current, (directional) earth-fault and thermal overload relays are often required. These functions can be easily included in RET 521 terminal.

In addition to these current based functions, often over-voltage and over-excitation protections are as well specified. These voltage-based functions can be as well easily accommodated within RET 521 terminal.

5. Conclusion

With RET 521 terminal it is usually possible to meet the utility demands for protection of HV & EHV shunt reactors. By using DIFP or REF functions (or even both simultaneously) the main protection for phase-to-phase faults and earth faults is provided. In addition to these functions a protective library with over-current, earth-fault, thermal overload, over-voltage & over-excitation functions is as well available. As a standard option RET 521 terminal offers the event recording for 48 binary signals. The disturbance recording for 10 analogue channels can be offered as an option.

For oil-immersed reactors the care shall be taken for the built-in protection devices like Buchholz relay, sudden-pressure relay, winding and oil temperature sensors etc. Their contacts should be connected to the RET 521 binary inputs in order to provide tripping, alarming and recording.

Protection Scheme for Special Railway Transformers with RET 521

Z. Gajić, Senior Application Specialist

Introduction

With RET 521, it is possible to protect special types of railway transformers. However it should be noted that RET 521 can be only used in 50Hz or 60Hz railway supply systems (i.e. it can not be used for protection in railway supply system with frequency of $16\frac{2}{3}\,Hz$). The following picture gives an overview about different railway electrical supply systems traditionally used in Europe.

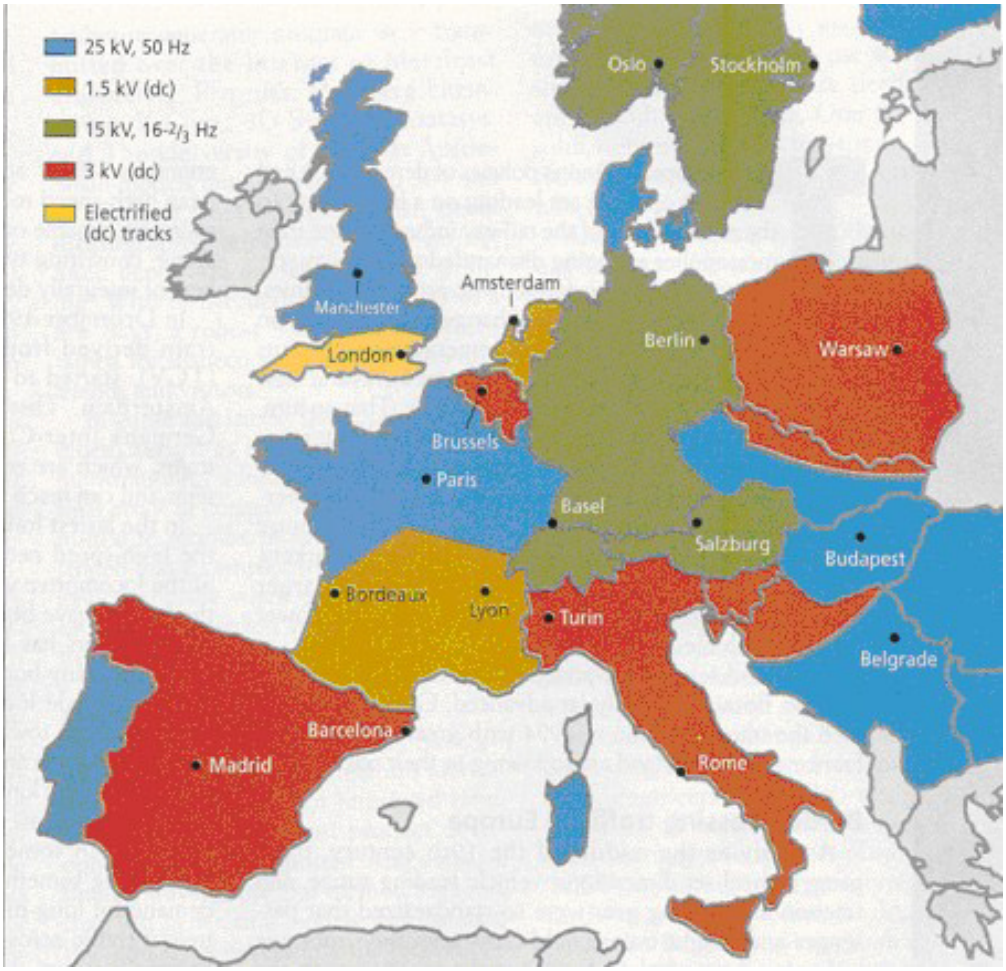

50Hz or 60Hz railway supply system is used in other parts of the world as well (i.e. Russia, Turkey, China, Korea, Australia etc.). It is often used in new railway electrification projects all over the world (for example in Italy, Korea, France etc.).

It is important to understand that RET 521 can offer, not only transformer differential protection, but also complete protection and control scheme for railway transformers.

It should be noted as well, that with 500 series of products (i.e. control terminal REC 561, railway distance protection terminal REO 517, transformer protection terminal RET 521 & busbar protection terminal RED 521) ABB can offer complete Substation Automation Protection and Control System for 50Hz or 60Hz railway supply system.

Standard Features in RET 521

RET 521 is primarily designed for protection and control of three-phase power transformers in transmission and distribution electricity power supply networks. Since its introduction in 1998, more than one thousand units were supplied worldwide. It is used for protection of power transformers with rating of up to and including 1000MVA, 500kV.

RET 521 is multifunctional power transformer protection and control terminal, which can include the following protection, control and monitoring functions:

- Differential protection for two or three winding power transformer with built-in 2nd harmonic block, 5th harmonic block and wave-block features (ANSI No 87T, 87H)
- Restricted earth fault protection functions (ANSI No 87N)
- Three-phase time overcurrent protection functions (ANSI No 50, 51)
- Single-phase time overcurrent protection functions (earth fault protection) (ANSI No 50N/51N, 50G/51G)
- Thermal overload protection function (ANSI No 49)
- Time overvoltage protection functions (ANSI No 59)
- Time undervoltage protection functions (ANSI No 27)
- Overexcitation (V/Hz) protection function (ANSI No 24)
- Automatic voltage control function (automatic on-load tap-changer control) (ANSI No 90)
- Disturbance recording for ten analogue signals with 1ms resolution
- Disturbance recording for 48 binary signals with 1ms resolution

RET 521 is fully numerical protection terminal. Twenty samples in each power system cycle (i.e. 1000Hz sampling rate for 50Hz power system, 1200Hz sampling rate for 60Hz power system) are used for all internal algorithms including transformer differential protection. By efficient digital filtering, phasors of the fundamental frequency component are extracted and used in all protection and control algorithms. Therefore any dc component and all higher order harmonics in the current and voltage input signals are effectively suppressed. Hence they do not influence much on the operation and the accuracy of any protection or control function in RET 521.

All calculations inside RET 521 are done in primary amperes and volts. Therefore it is of outmost importance that all CT & VT data (i.e. ratios and grounding) are properly set. For the railway applications CT and VT data need to be set in the same way as for the normal three-phase power transformer.

In RET 521 is necessary to set “Power Transformer Rated Data”. Under these settings the user have to enter rated power, rated current and rated voltage for every winding of the three-phase power transformer. All protection and control functions in RET 521 in one or another way use these set values. For all railway application these data need to be set in a special way because the railway transformers are not of a three-phase design. However in this document is clearly shown how this data need to be set for each specific railway transformer type.

Protection Scheme for Three-Phase, Dd0d0 Power Transformer

First let’s explain a protection scheme for “normal” three-phase power transformer in order to understand how the differential currents are calculated within the RET 521 terminal. For this example it is possible to use RET 521 for the complete transformer protection scheme as shown on the following figure:

Protection of 3Ph Dd0d0 Power Transformer

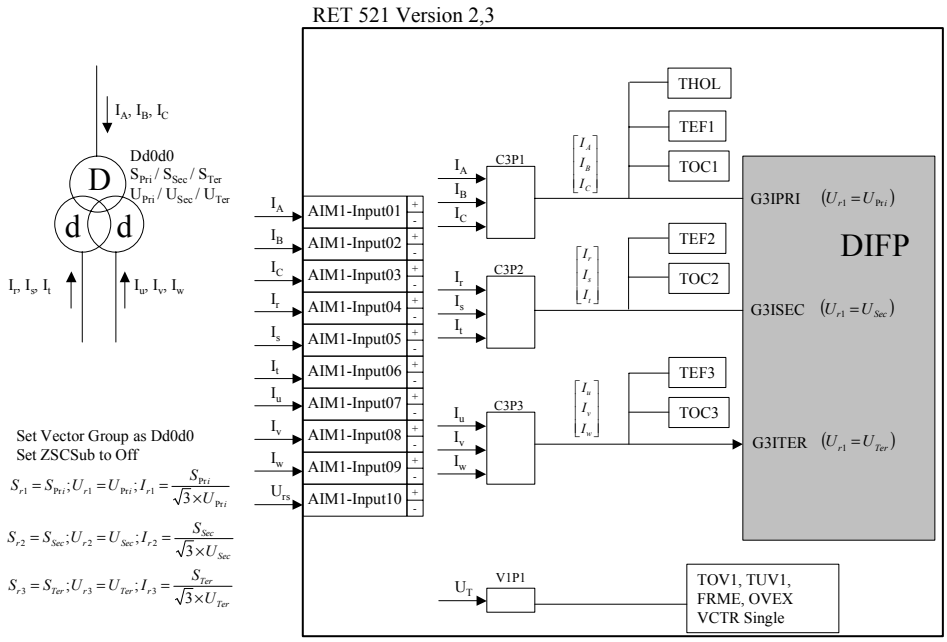

In the same time this figure shows the required analogue quantities which needs to be measured as well as the analogue part of the configuration which need to be made in the CAP tool for this particular application. In this case the following functions can be included:

Function in RET	What-for the function is used in configuration
DIFP (3-winding)	Bias differential function for the transformer (87T & 87H)
TOC1	HV overcurrent (50/51)
TEF1	HV earth-fault (50N/51N)
TOC2	MV overcurrent (50/51)
TEF2	MV earth-fault (50N/51N)
TOC3	LV overcurrent (50/51)
TEF3	LV earth-fault (50N/51N)
THOL	HV Thermal overload (49)
FRME	Frequency measurement
TOV1	LV Overvoltage (59)
TUV1	LV Undervoltage (27)
OVEX	Overexcitation (not commonly used in railway applications) (24)
VCTR	Voltage control for transformer with OLTC (90)
DRxx	Disturbance Recorder function for 10 analogue & 48 binary channels

It can be shown that for this particular setup and settings for ZSCSub="Off", DIFP function will calculate the three differential currents as per the following equations:

$$Idiff\_L1 = I_A + \frac{U_{r2}}{U_{r1}} \times I_r + \frac{U_{r3}}{U_{r1}} \times I_u$$

$$Idiff\_L2 = I_B + \frac{U_{r2}}{U_{r1}} \times I_s + \frac{U_{r3}}{U_{r1}} \times I_v$$

$$Idiff\_L3 = I_C + \frac{U_{r2}}{U_{r1}} \times I_t + \frac{U_{r3}}{U_{r1}} \times I_w$$

Please note that in above equations, the three differential currents are related to HV transformer side (i.e. primary side). However it should be noted that set values for rated powers of the windings (Sr1, Sr2 & Sr3) under "Power Transformer Data" can influence on which side the differential currents will be transfered. The differential currents will be transferred to the side with maximum rated power, where maximum rated power is defined as maximum value of the three set values for Sr1, Sr2 & Sr3. If more than one winding has the rated power equal to the maximum rated power than order of preference will be primary winding, then secondary winding, then tertiary winding.

Protection Schemes for Railway Power Transformers

In addition to the features mentioned before it is as well possible to choose in RET 521 configuration tool in which reference direction connected current will be measured internally (i.e. + & - outputs available from AIM function blocks). This feature gives the user a possibility to measure the current in any direction he needs, as well as to sum or subtract two sets of three-phase currents by C3Cx summation function blocks. This feature enables user to perform current subtraction/summation in software, without any need for galvanic connections between different CT secondary circuits.

As mentioned before, RET 521 was in the first place design for protection of three phase power transformers. Therefore analogue quantities inside are very often treated in the three-phase manner (see previous figure for more details), and the same rules must be used for these special railway applications as well. Because of that it will be necessary to use some "zero current" (i.e. analogue input quantity with zero value) in order to build the artificial three-phase quantities inside the railway protection terminal. This zero current will be obtained from one RET 521 analogue CT input, which will not be connected (i.e. intentionally left unwired). The configuration parameters for this CT input shall be set in the following way:

CTprim=1A, CTsec=1A, InputCTTap=1A

In this way any noise from that CT input will be effectively suppressed.

In all configurations that will be shown in this document analogue CT input AIM1/Input04 will be used as zero current input.

Combination of all of these features gives the opportunity to use the RET 521 terminal as differential protection for special railway power transformers without any external auxiliary current transformers.

Typically required hardware in RET 521 for railway applications

All railway applications shown in this document can be realized with the identical RET 521 hardware configuration as listed bellow:

1 x AIM module (8I+2U) (eight current and two voltage inputs from the protected transformer)
1 x BIM module (16 binary inputs for connection of winding & oil contact thermometers, buchholz relay, external tripping devices, etc.)
1 x BOM module (24 contact outputs for trip commands, alarms, SCADA indications, etc.)
1 x MIM module (six, ±20mA input channels, which can be **optionally** used for on-load tap-changer position reading and/or oil & winding temperature measurement)
1 x SLM (SPA & LON communication module, which can be **optionally** used for terminal connection to the substation control system, substation monitoring system or remote interrogation of the terminal via public telephone network)

Protection Scheme for Single Phase Power Transformer

This type of transformer is commonly used in Europe in older types of railway installations. It is usually connected as shown in the following figure:

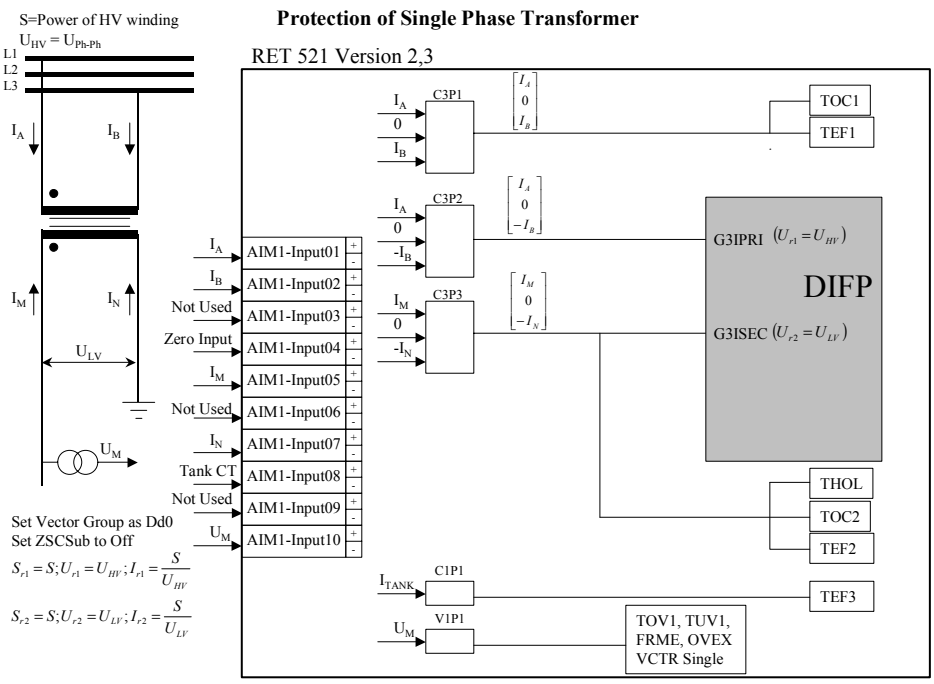

In the same time this figure shows the analogue quantities, which can be measured by RET 521. The Figure shows as well the analogue part of the configuration which need to be made in the CAP tool for this particular application. In this case the following functions can be included:

Function in RET	What-for the function is used in configuration
DIFP (2-winding)	Bias Differential function for the transformer (87T & 87H)
TOC1	HV overcurrent (50/51)
TEF1	HV earth-fault (50N/51N)
TOC2	LV overcurrent (50/51)
TEF2	LV winding earth-fault (50N/51N)
TEF3	Tank earth-fault protection (used in some countries i.e. France)
THOL	LV Thermal overload (49)
FRME	Frequency measurement
TOV1	LV Overvoltage (59)
TUV1	LV Undervoltage (27)
OVEX	Overexcitation (24)
VCTR (Single)	Voltage control for transformer with OLTC (90)
DRxx	Disturbance Recorder function for 10 analogue & 48 binary channels

Because the Dd0 vector group is used, the DIFP function will calculate the three differential currents as per the following equations:

$$Idiff\_L1 = I_A + \frac{U_{LV}}{U_{HV}} \times I_M$$

$$Idiff\_L2 = 0$$

$$Idiff\_L3 = -I_B - \frac{U_{LV}}{U_{HV}} \times I_N$$

Therefore phase L1 & phase L3 will be used for differential protection, while phase L2 will measure zero current all the time (i.e. phase L2 in DIFP function will not be used). Please note that differential currents will be related to HV transformer side.

It should be observed that in practice very often only one HV CT & one LV CT are available. In that case it is even possible to protect two such railway power transformers with one RET 521 terminal. This opening gives possibility for more cost effective solutions.

Protection Scheme for Split-Single Phase Power Transformer

This type of transformer is commonly used in Europe for new railway installations (i.e. Italy & France). See the following figure for more information:

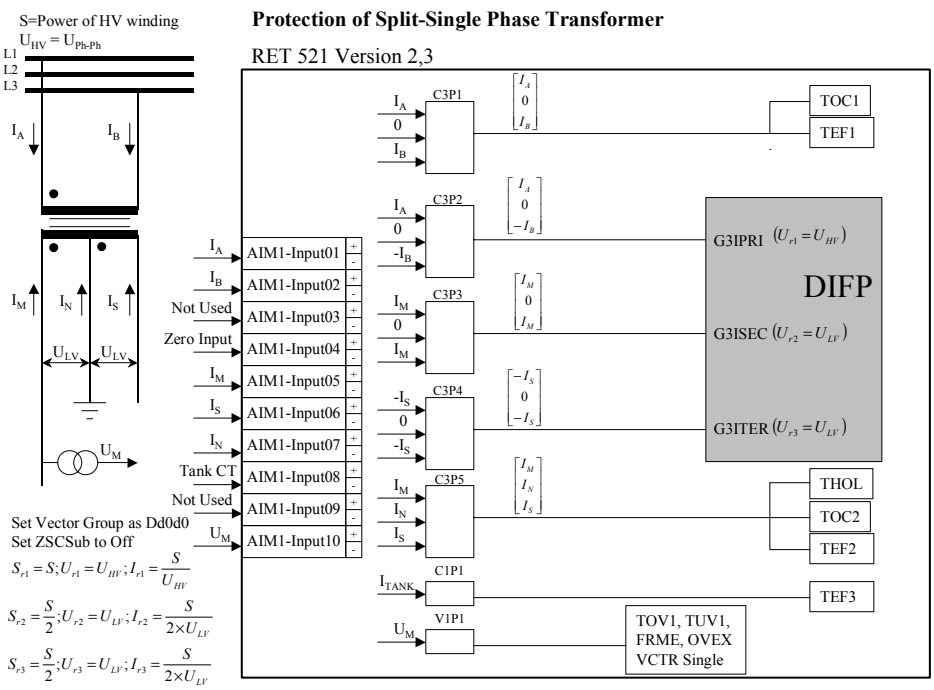

In the same time this figure shows the required analogue quantities which needs to be measured as well as the analogue part of the configuration which need to be made in the CAP tool for this particular application. In this case the following functions can be included:

Function in RET	What-for the function is used in configuration
DIFP (3-wndg)	Bias Differential function for the transformer (87T & 87H)
TOC1	HV overcurrent (50/51)
TEF1	HV earth-fault (50N/51N)
TOC2	LV overcurrent (50/51)
TEF2	LV winding earth-fault (50N/51N)
TEF3	Tank earth-fault protection (used in some countries i.e. France)
THOL	LV Thermal overload (49)
FRME	Frequency measurement
TOV1	LV Overvoltage (59)
TUV1	LV Undervoltage (27)
OVEX	Overexcitation (24)
VCTR	Automatic Voltage control (90)
DRxx	Disturbance Recorder function for 10 analogue & 48 binary channels

Because the Dd0d0 vector group is used, the DIFP function will calculate the three differential currents as per the following equations:

$$Idiff\_L1 = I_A + \frac{U_{LV}}{U_{HV}} \times I_M - \frac{U_{LV}}{U_{HV}} \times I_S$$

$$Idiff\_L2 = 0$$

$$Idiff\_L3 = -I_B + \frac{U_{LV}}{U_{HV}} \times I_M - \frac{U_{LV}}{U_{HV}} \times I_S$$

Therefore phase L1 & phase L3 will be used for differential protection, while phase L2 will measure zero current all the time (i.e. phase L2 in DIFP function will not be used). For this application differential currents will be related to HV transformer side.

Please note that, with some restriction, is as well possible to protect two of these transformers with one RET 521 terminal.

Protection Scheme for Autotransformer

Autotransformers are always used together with split-single phase transformer design (i.e.2x25kV railway supply system). Autotransformer is located in paralleling or traction station and is often shared between two railway tracks. Following figure shows typical installation layout:

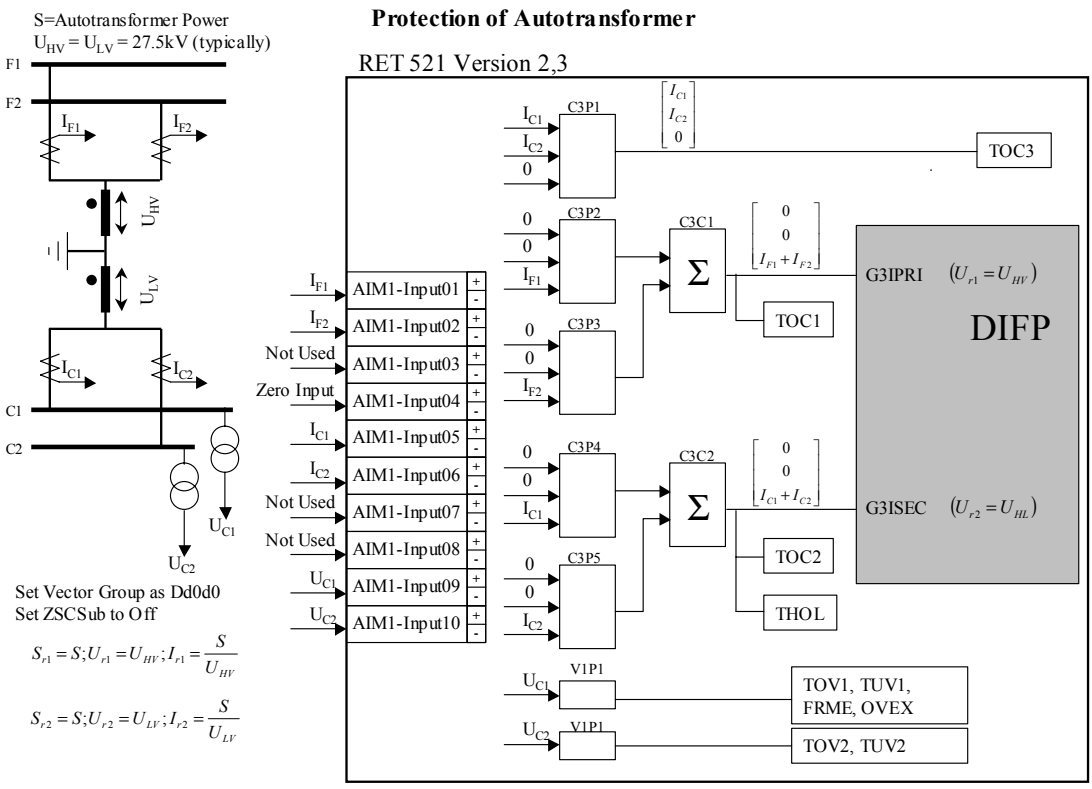

In the same time this figure shows the required analogue quantities which needs to be measured as well as the analogue part of the configuration which need to be made in the CAP tool for this particular application. In this case the following functions are included:

Function in RET	What-for the function is used in configuration
DIFP (2-wndg)	Bias Differential function for the autotransformer (87T & 87H)
TOC1	Feeders side autotransformer overcurrent protection (50/51)
TOC2	Catenary side autotransformer overcurrent protection (50/51)
THOL	Autotransformer thermal overload protection (49)
TOC3	Catenary backup overcurrent protection
FRME	Frequency measurement
TOV1	Catenary 1 Overvoltage protection (59)
TUV1	Catenary 1 Undervoltage protection (27)
TOV2	Catenary 2 Overvoltage protection (59)
TUV2	Catenary 2 Undervoltage protection (27)
OVEX	Overexcitation (24)
DRxx	Disturbance Recorder function for 10 analogue & 48 binary channels

Because the Dd0d0 vector group is used, the DIFP function will calculate the three differential currents as per the following equations:

$$Idiff\_L1 = 0$$

$$Idiff\_L2 = 0$$

$$Idiff\_L3 = (I_{F1} + I_{F2}) + \frac{U_{LV}}{U_{HV}} \times (I_{C1} + I_{C2})$$

Therefore only phase L3 will be used for differential protection, while phases L1 & L2 will measure zero current all the time (i.e. L1 & L2 phases in DIFP function will not be used). For this application differential currents will be related to HV transformer side.

It should be noted that that backup overcurrent protection, for catenary is achieved by one RET function TOC3. Therefore the pickup and the time delay is the same for both phases. If required by the client, it is possible to use two earth-fault functions (i.e. TEF1 and TEF2) as independent overcurrent protections for each catenary. This will provide separate setting possibilities for each catenary as well as possibility for second harmonic restrain feature. It is as well possible to include autotransformer tank earth-fault protection if required.

Please note that for solutions where in the same paralleling station there is more than one autotransformer, it would be as well possible, with some restriction, to protect two or even three autotransformers with one RET 521 terminal.

Protection Scheme for Scott Power Transformer

This type of transformer is commonly used in Asia for railway installations (i.e. China & Korea). Its main feature is the ability to transfer three-phase power supply system to two-phase railway supply system. See the following figure for more information:

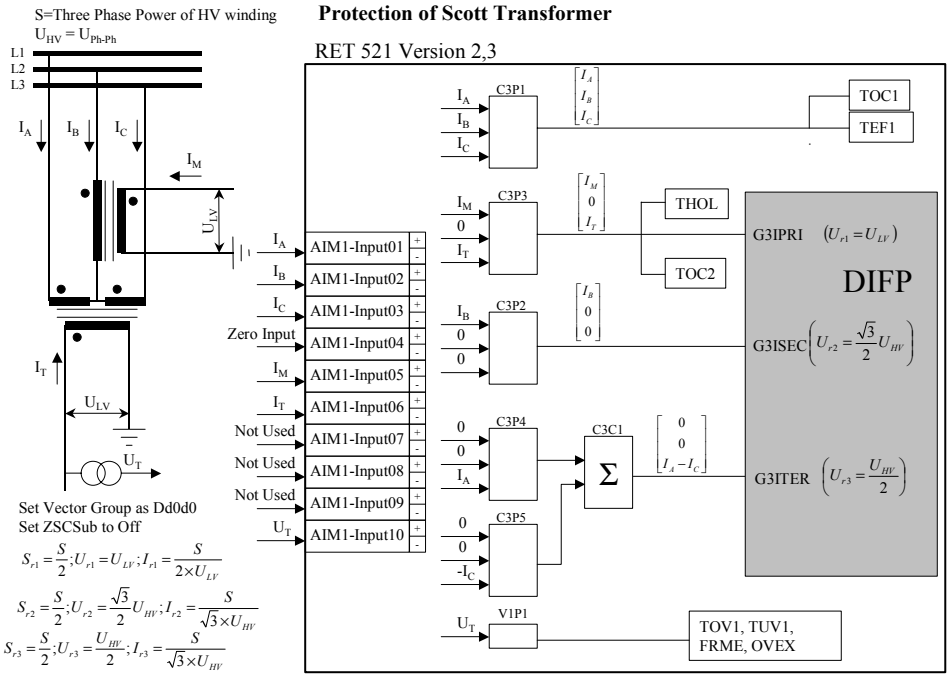

In the same time this figure shows the required analogue quantities which needs to be measured as well as the analogue part of the configuration which need to be made in the CAP tool for this particular application. In this case the following functions can be included:

Function in RET	What-for the function is used in configuration
DIFP (3-wndg)	Bias differential function for the transformer (87T & 87H)
TOC1	HV overcurrent (50/51)
TEF1	HV earth-fault (50N/51N)
TOC2	Overcurrent for 2-phase railway supply system (50/51)
THOL	Thermal overload for 2-phase railway supply system (49)
FRME	Frequency measurement
TOV1	LV overvoltage (59)
TUV1	LV Undervoltage (27)
OVEX	Overexcitation (24)
DRxx	Disturbance Recorder function for 10 analogue & 48 binary channels

It should be noted that only one phase voltage (i.e. U_T) of the 2-phase railway supply system is connected to RET 521. However it is possible to connect the other phase voltage (i.e. U_M) to the VT analogue input AIM1-Input09. If required another set of over/under voltage protection functions (i.e. TOV2 & TUV2) can be included to monitor/protect that winding voltage as well.

Because the Dd0d0 vector group is used, the DIFP function will calculate the three differential currents as per the following equations:

$$Idiff\_L1 = I_M + \frac{\frac{\sqrt{3}}{2}U_{HV}}{U_{LV}} \times I_B + \frac{\frac{U_{HV}}{2}}{U_{LV}} \times 0 = I_M + \frac{\frac{\sqrt{3}}{2}U_{HV}}{U_{LV}} \times I_B$$

$$Idiff\_L2 = 0$$

$$Idiff\_L3 = I_T + \frac{\frac{\sqrt{3}}{2}U_{HV}}{U_{LV}} \times 0 + \frac{\frac{U_{HV}}{2}}{U_{LV}} \times (I_A - I_C) = I_T + \frac{\frac{U_{HV}}{2}}{U_{LV}} \times (I_A - I_C)$$

Therefore phase L1 & phase L3 will be used for differential protection, while phase L2 will measure zero current all the time (i.e. phase L2 in DIFP function will not be used). Please note that differential currents will be related to 2-phase supply system side.
It should be noted that that overcurrent protection, for 2-phase railway supply system is achieved by one RET function TOC2. Therefore the pickup and the time delay is the same for both catenaries. If required by the client, it is possible to use two earth-fault functions (i.e. TEF2 and TEF3) as independent overcurrent protections for each catenary. This will provide separate setting possibilities for each catenary as well as possibility for second harmonic restrain feature.
It would be as well possible to include transformer tank earth-fault protection if required by the railway company.

Protection Scheme for Le-Blanc Power Transformer

This type of transformer is commonly used in Asia for railway installations (i.e. Taiwan). Its main feature is the ability to transfer three-phase supply system to two-phase railway supply system. See the following figure for more information:

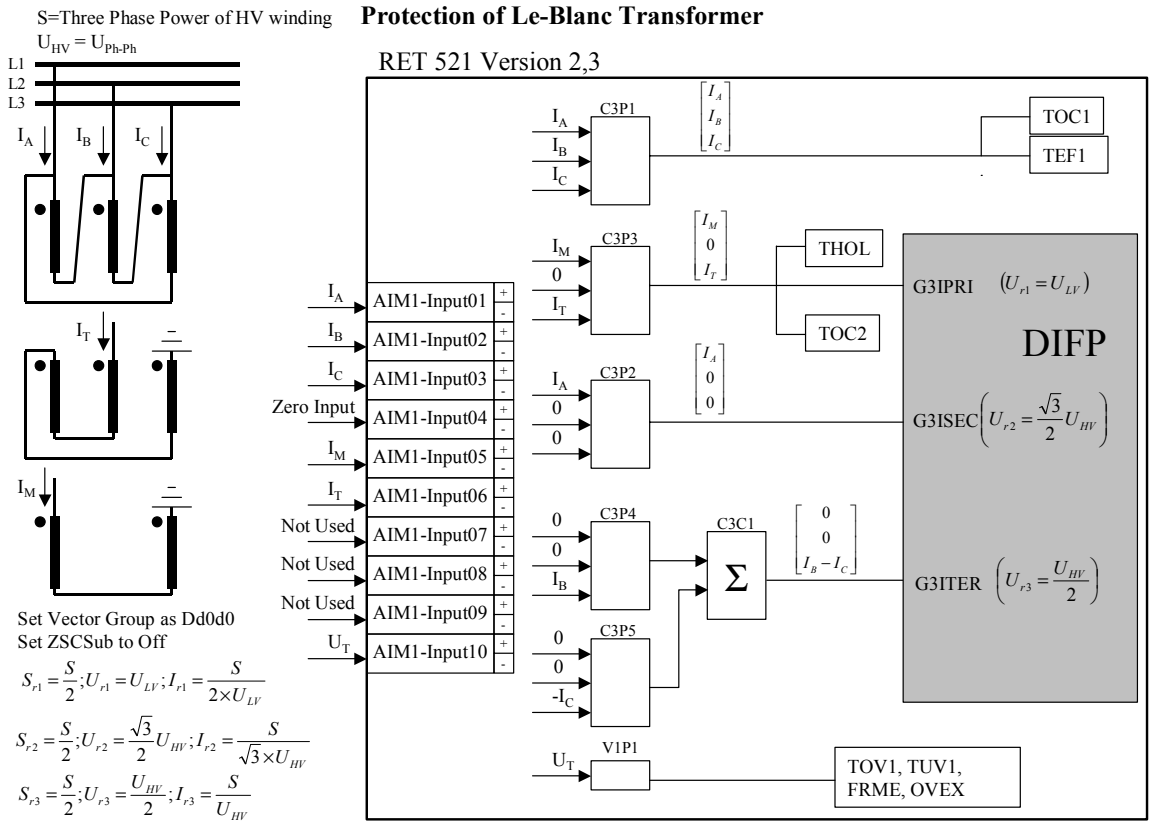

In the same time this figure shows the required analogue quantities which needs to be measured as well as the analogue part of the configuration which need to be made in the CAP tool for this particular application. In this case the following functions can be included:

Function in RET	What-for the function is used in configuration
DIFP (3-wndg)	Bias differential function for the transformer (87T & 87H)
TOC1	HV overcurrent (50/51)
TEF1	HV earth-fault (50N/51N)
TOC2	Overcurrent for 2-phase railway supply system (50/51)
THOL	Thermal overload for 2-phase railway supply system (49)
FRME	Frequency measurement
TOV1	LV overvoltage (59)
TUV1	LV Undervoltage (27)
OVEX	Overexcitation (24)
DRxx	Disturbance Recorder function for 10 analogue & 48 binary channels

It should be noted that only one phase voltage (i.e. U_T) of the 2-phase railway supply system is connected to RET 521. However it is possible to connect the other phase voltage (i.e. U_M) to the VT analogue input AIM1-Input09. If required another set of over/under voltage protection functions (i.e. TOV2 & TUV2) can be included to monitor/protect that winding voltage as well.

Because the Dd0d0 vector group is used, the DIFP function will calculate the three differential currents as per the following equations

$$Idiff\_L1 = I_M + \frac{\frac{\sqrt{3}}{2}U_{HV}}{U_{LV}} \times I_A + \frac{\frac{U_{HV}}{2}}{U_{LV}} \times 0 = I_M + \frac{\frac{\sqrt{3}}{2}U_{HV}}{U_{LV}} \times I_A$$

$$Idiff\_L2 = 0$$

$$Idiff\_L3 = I_T + \frac{\frac{\sqrt{3}}{2}U_{HV}}{U_{LV}} \times 0 + \frac{\frac{U_{HV}}{2}}{U_{LV}} \times (I_B - I_C) = I_T + \frac{\frac{U_{HV}}{2}}{U_{LV}} \times (I_B - I_C)$$

Therefore phase L1 & phase L3 will be used for differential protection, while phase L2 will measure zero current all the time (i.e. phase L2 in DIFP function will not be used). Please note that differential currents will be related to 2-phase supply system side.

It should be noted that that overcurrent protection, for 2-phase railway supply system is achieved by one RET function TOC2. Therefore the pickup and the time delay is the same for both phases. If required by the client, it is possible to use earth-fault functions TEF2 and TEF3 as overcurrent protections for I_T & I_M respectively. This will provide separate settings for two phases as well as possibility for second harmonic restrain feature.

It would be as well possible to include transformer tank earth-fault protection if required by the railway company.

Conclusion

Typical protection schemes with RET 521 terminal for most common types of railway power transformers has been presented. However it should be noted that these are only typical schemes. If you have any other requirements for protection of electrical railway supply system, please do contact your local ABB representative in order to make tailor-made solution in accordance with your demands.

References:

1. Bin-Kwie Chen and Bing-Song Guo, “Three Phase Models of Specially Connected Transformers”, IEEE, Transaction on Power Delivery, Vol. 11. No 1, January 1996

2. Modolf Stien, “Differential och impedansreläer för Scott-transformatorer”, ASEA RELAYS, 1988-04-26

3. Kwang-Chang Lu and Nanming Chen, “A Two-Relay Differential Protective Scheme for Le-Blanc Transformers”, IEEE, Transaction on Power Delivery, Vol. 14. No 3, July 1999

4. Jin-Maun Ho and Tsung-Ling Tsou, “The effect analysis and Simulation Test of Harmonics on Differential Protection of Scott Transformers”, IEEE Porto Power Tech Conference, Portugal 2001

ABB Automation Technology Products AB
Substation Automation
SE-721 59 Västerås
Sweden
Telephone: +46 (0) 21 34 20 00
Facsimile: +46 (0) 21 14 69 18
www.abb.com/substationautomation

1MRK 504 037-UEN

Printed on recycled and ecolabelled paper at Elanders Novum