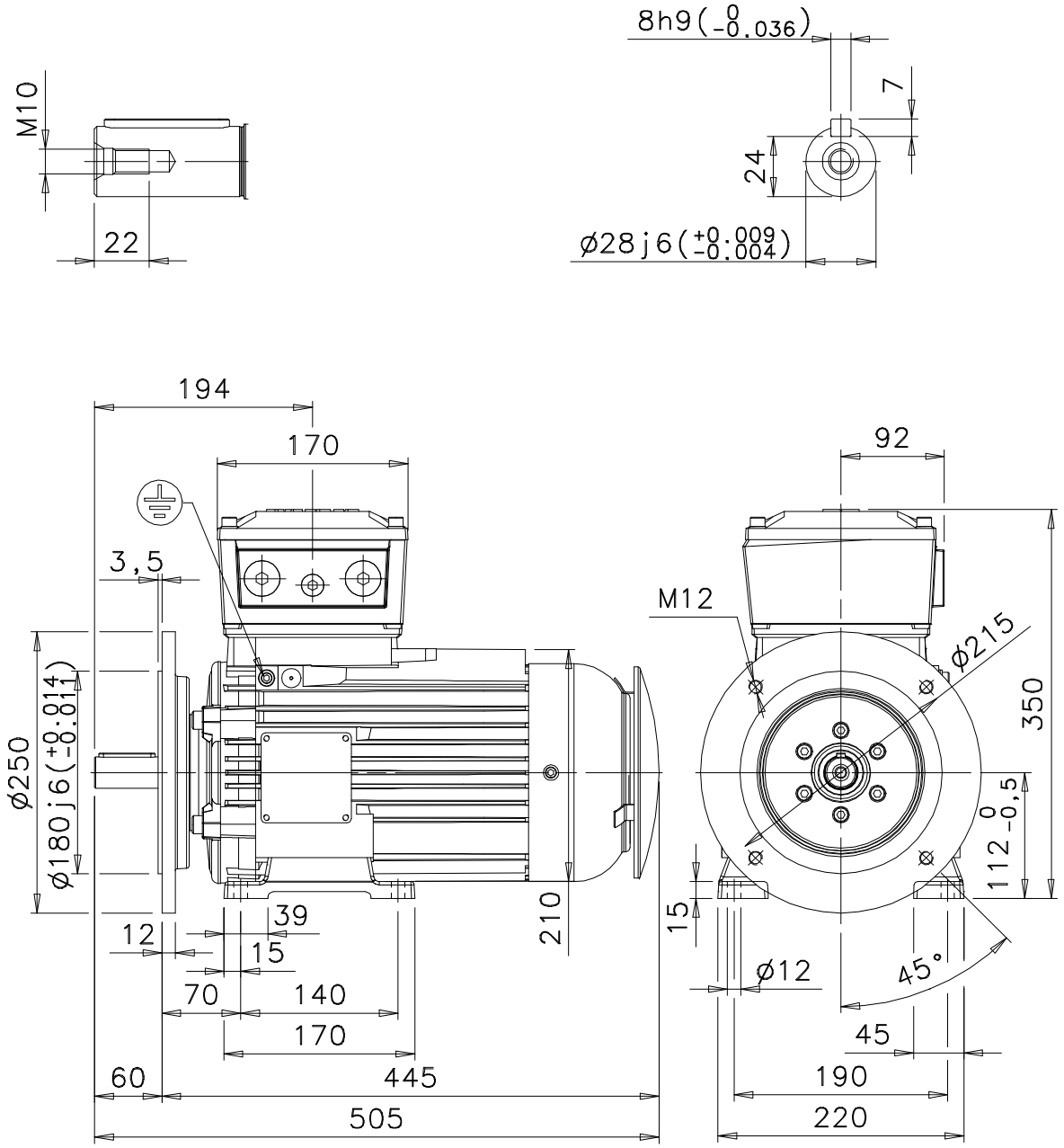

Additional information:

Dimension Print	Motor Type: M3JP 112M_2-8, V17, FT215	Document No: 3GZF500211-55 A 13 JP 112 A
Description: STANDARD SQUIRREL CAGE MOTOR		

Unit:	ABB Oy, Motors and Generators	Issued by:	R.Ketonen	Replaces:	
Date:	01.02.2011	Approved by:	P.Viitanen	Replaced by:	

ABB Oy	Customer Reference:	ABB