**ASEA**

TYRAK® 8A
Convertors
YGMK
YHMK
YGML
YHML

Manual
YT 280-301 E

CONTENTS



ORDER NO.

# TYRAK® 8A DC DRIVE SYSTEM
# THYRISTOR CONVERTORS 10-2000 kW
# DESCRIPTION

Contents



8

# 1 GENERAL

## 1.1 Design

The basic design of convertors in the TYRAK 8A d.c. drive syst is the same over the entire current range.

Fig. 1-1 shows how the convertor equipment is divided up on th basis of functions. In simple terms, the function boundaries with the outside world are the current reference input and the armature current or field current output. Overriding control included in "drive control equipment 1" and is described in separate publications.

"Convertor control equipment" and "drive control equipment 1" are mounted on either side of the electronics unit, which in turn is mounted directly on the thyristor unit. "Drive contro equipment 1" contains circuit boards for standardised and frequently-occurring drive systems. Equipment for less common and non-standard drive systems, known as process matching unit are included in "drive control equipment 2". This is made up COMBITROL/COMBIFLEX units, and is mounted in a hinged frame in the door.

The instrument unit (pushbuttons and instruments) mounted in t door is common to "convertor control equipment" and "drive control equipment".

## 1.2 Explanation of the diagrams

Many of the diagrams in this description are taken from the circuit diagram. Top right on each of them there is a referer in brackets to the relevant sheet of the set of circuit diagrams.

All jumper links are shown open in the diagrams. The circuit diagram shows which of them are closed for a particular application. Certain digital inputs are disconnected from the relevant signal input when there is no jumper link, and go to defined level, "0" or "1". If the disconnected input goes to level "1", this is stated on the diagram.

Some signal designations have a suffix -N meaning that the signal is negated, i.e. that its level is "0" for the activity referred to by the signal designation. A glossary of the sigr designations used is given in Chapter 9.

Where digital signals can be measured via test points (see 1.3 the signal levels are >8 V for "1" and <4 V for "0".

## 1.3 Numbering of terminals, terminal blocks and connectors

8

Screw terminals and board-to-board connectors are numbered consecutively from X1, starting with screw terminals. Test points are numbered from X21 upwards, and ribbon cable connectors from X31.
Jumper links are numbered consecutively from S1.

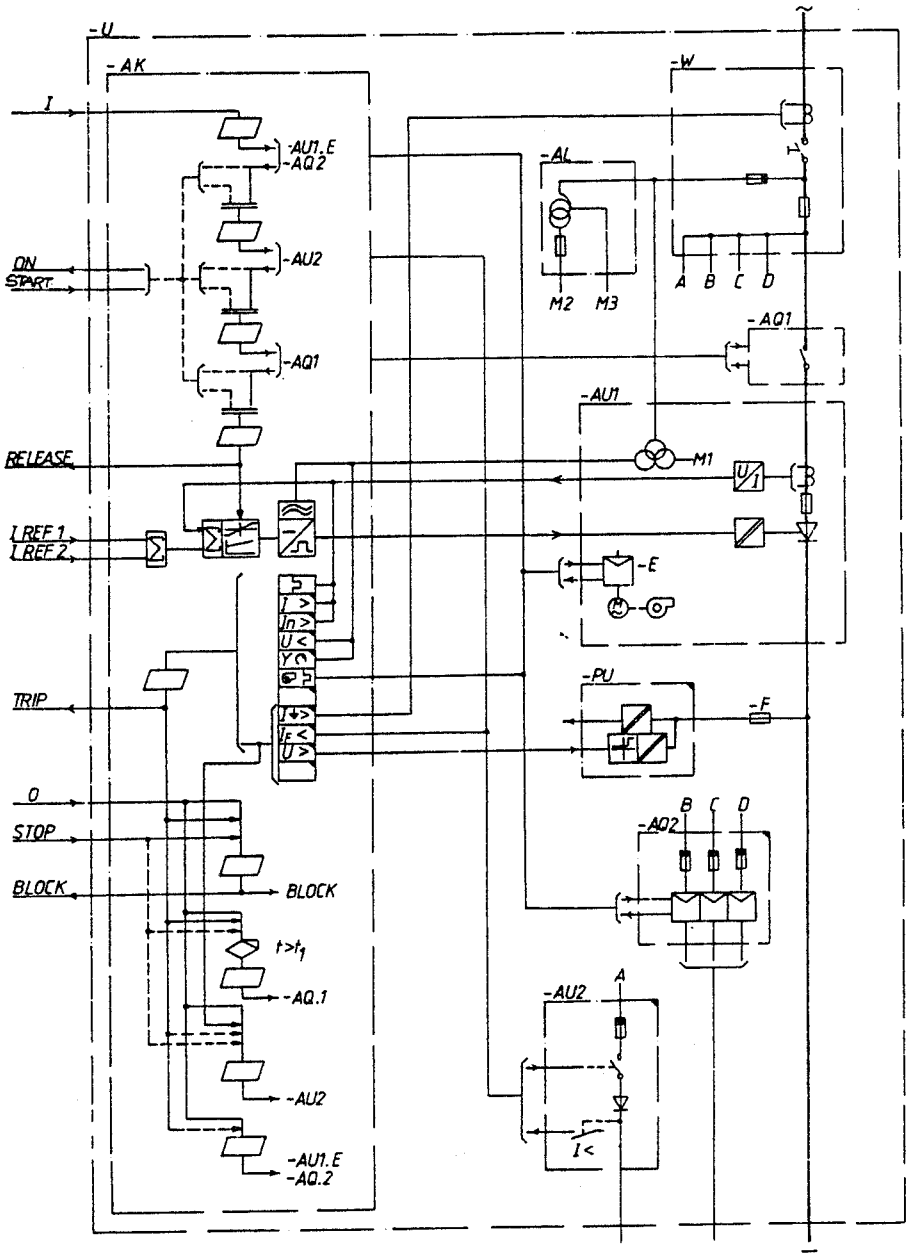


| | |
|---|---|
| -U.AK | Convertor control equipment |
| -U.W | AC voltage distribution |
| -U.AL | Auxiliary supply equipment |
| -U.AQ1 | Contactor unit |
| -U.AU1 | Thyristor unit |
| -U.AU2 | Field supply |
| -U.PU | DC voltage measuring unit |
| -U.AQ2 | Control unit external fans |

Fig 1-1 Schematic diagram of TYRAK 8A convertor equipment ($I_{dmN} \leqslant 1350$ A)

## 2
## AC VOLTAGE DISTRIBUTION

### 2.1
### Load switch and fuses ($I_{dmN} \leqslant 1350$ A)

The a.c. voltage distribution equipment is made up of the load switch, main fuses and auxiliary supply fuses.

By removing the main fuse it is possible to test the control equipment without the main circuit being live.

The load switch is provided with a position indicating device which always shows the position of the contacts, not the position of the knob.

Convertors delivered without enclosure have no a.c. voltage distribution equipment, and must therefore be provided with external fuse protection.

### 2.2
### Circuit breaker ($I_{dmN}$ = 1860 and 2445 A)

The load switch, main fuses and main contactor are here replaced with a disconnectible circuit breaker of ALG type. Other loads are supplied via a load switch connected to the mains supply, before the ALG switch. Thus, by opening the ALG switch, voltage may be disconnected from the thyristors when testing the control equipment.

### 2.3
### Phase reactors

For a double convertor arrangement the a.c. voltage distribution equipment also includes phase reactors. The purpose of these is to protect the thyristors of the non-conducting bridge against exceesive voltage transients in the blocking direction.

Convertors delivered without enclosure do not include phase reactors, and external phase reactors must therefore be connected. These must be about 6 µH for $U_{vN} < 500$ V and 11 µH for $U_{vN} < 500$ V, whatever the size of the convertor. If the connection cable to a parallel convertor is so long that its inductance exceeds this value (equivalent to about 25 and 45 m of three-phase cable. respectively), no separate phase reactors are required.

## 3 AUXILIARY SUPPLY

There are three different auxiliary supply voltages in the convertor, and the main designations for these are Q1, M1 and M2. The first two are d.c. voltages, and are generated on the thyristor unit. M2 is an alternating voltage, and is generated on the contactor unit. ($I_{dmN1} \leqslant 400$ A) or on a separate voltage supply unit. ($I_{dmN1} > 400$ A)

### 3.1 Table of auxiliary voltages

DC voltages

| Designation | Nominal voltage | Permitted variation | Ripple | Max load | Fuse on YXE 143 | Terminal on YXE 143 | Test point on YXT 115 |
|---|---|---|---|---|---|---|---|
| Q1M | 0 | - | - | - | - | X1:3 | X23:1 |
| Q1+ | +24 V | 20-28 V | <1 V | 2.5 A | 4 A | X1:1. 2 | X23:3 |
| Q1- | -24 V | 20-28 V | <1 V | 1.0 A | 2 A | X1:4 | X23:2 |
| M1+ (for 110/115 V) | +112.5 V | 95-125 V | <1 V | 0.17 A | 1 A | X1:5, 6, 7<br>51.X1:12 *) | |
| M1- | 0 | - | - | - | - | X1:8, 9, 10<br>51.X1:13 *) | |

*) On supply transformer (51)

AC voltages

| Designation | Nominal voltage | Permitted variation | Max load | Fuse *) | Terminal **) |
|---|---|---|---|---|---|
| M2L (50 Hz) | 110 V | 100-125 V | 200 VA | 6.3 A | 3:1 alt. 11:1 |
| M2L (60 Hz) | 115 V | 105-130 V | 200 VA | 6.3 A | 3:1 alt. 11:1 |
| M2N | 0 | - | - | - | 3:2 alt. 11:2 |

*) On supply transformer 3 alt. 11:1 terminal 1
**) On supply transformer 3 alt. 11:1

8

3.2
Power supply unit, d.c.

Voltage Q1 is used internally in the convertor equipment; for some purposes it is also stabilised to ± 15 V in basic control unit YXT 115. Q1 goes to YXT 115 in a ribbon cable together with the six-phase a.c. voltage.

Voltage M1 corresponds to 110 or 115 V standard voltage, and i used mainly for external digital signals of the ON/OFF type, external faults and so on (opto-isolators or relays).

A common transformer is used for voltages Q1 and M1. Q1 is supplied from a six-phase secondary winding, and the same six-phase voltage is also used for the trigger pulse generator M1 is supplied from a three-phase secondary winding.

The rectifiers for Q1 and M1 are mounted on the same circuit board, YXE 143.

The d.c. voltages are protected by 250 V 5 x 20 mm tubular fus on circuit board YXE 143. The fuseholders are marked Q1+, Q1- and M1+.

3.3
Power supply unit, a.c.

Voltage M2 is used to power small contactors in the convertor

The supply transformer for M2 has a nominal output for 110 V 50 Hz, 115 V 60 Hz. The supply is protected by a 250 V 5 x 20 tubular fuse in the terminal block 1 on the transformer.

In certain cases the transformer also gives a supply voltage which is used for the main contactor of the armature supply unit.

The above supply transformer is not included in convertors YGMK/YHMK (without contactor unit).

3.4
Earthing

M1- and M2N are directly earthed to the chassis.
If M1-voltages from several convertors are coupled together, the earthing must be disconnected from all except one convertor.

For tracing earth faults it is possible to isolate M1 by unplugging connector X1 on YXE 143. M2 can be isolated with terminal blocks 1 and 2 on transformer (3).

The Q1M lines of different convertors are often connected together within an installation via the reference system. Sin Q1M must be earthed at one point only, it is not earthed in t convertor as supplied. A neutral filter made up of a 10 uF capacitor in parallel with a 1 kohm resistor is available for earthing as an accessory. Direct earthing is also permitted.

# 4
# CONVERTOR CONTROL EQUIPMENT

The convertor control equipment includes interactive control circuits for armature supply, field exciter and fans, and trigger pulse and analog control circuits for armature supply. There are also circuits to stabilise the ±15 V and ±10 V suppl. voltages for both the convertor control equipment and the driv control equipment. See fig 1-1 on page 4.

The major part of the convertor control equipment is arranged the inner side of the electronics unit, as shown in fig. 4-1.

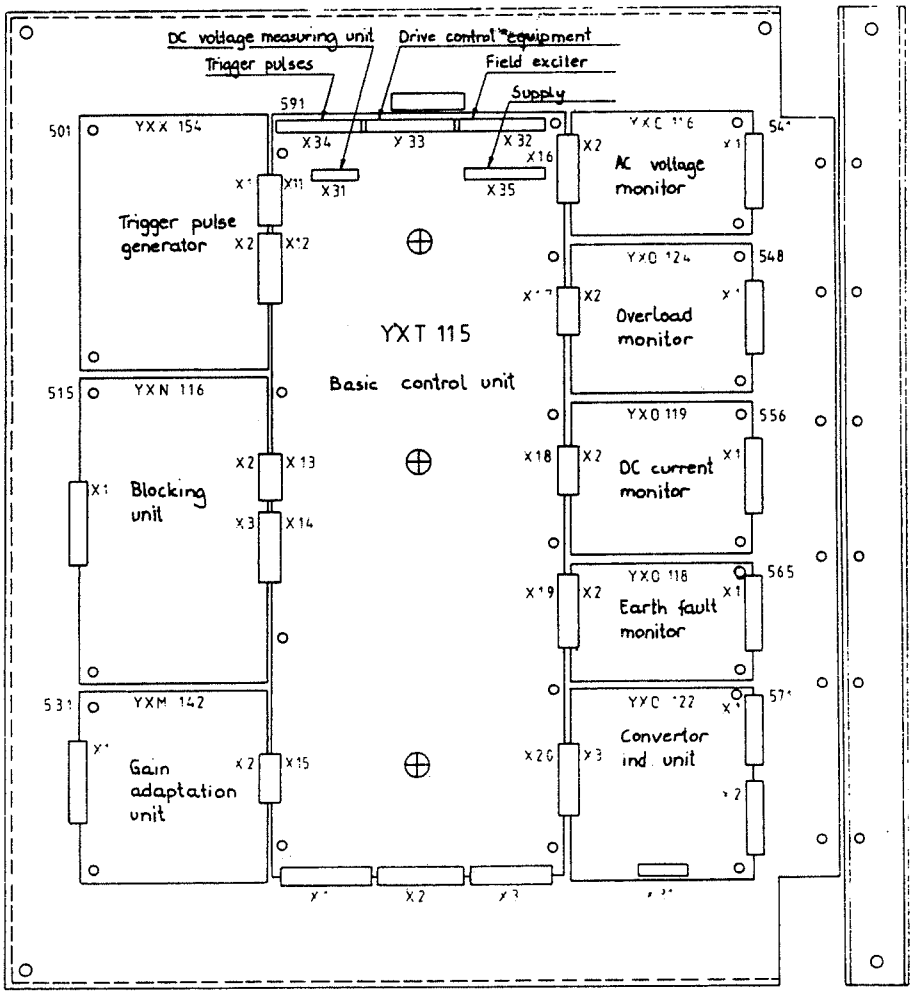


Fig. 4-1 Convertor control equipment

8

The basic version includes:
Basic control unit YXT 115, trigger pulse generator YXX 154, overload protection YXO 124 and, for double convertors, block unit YXN 116. All other units are accessories.

Fig. 4-2 shows which components are mounted on solder posts and can therefore be replaced when adjusting during commissioning, for example.

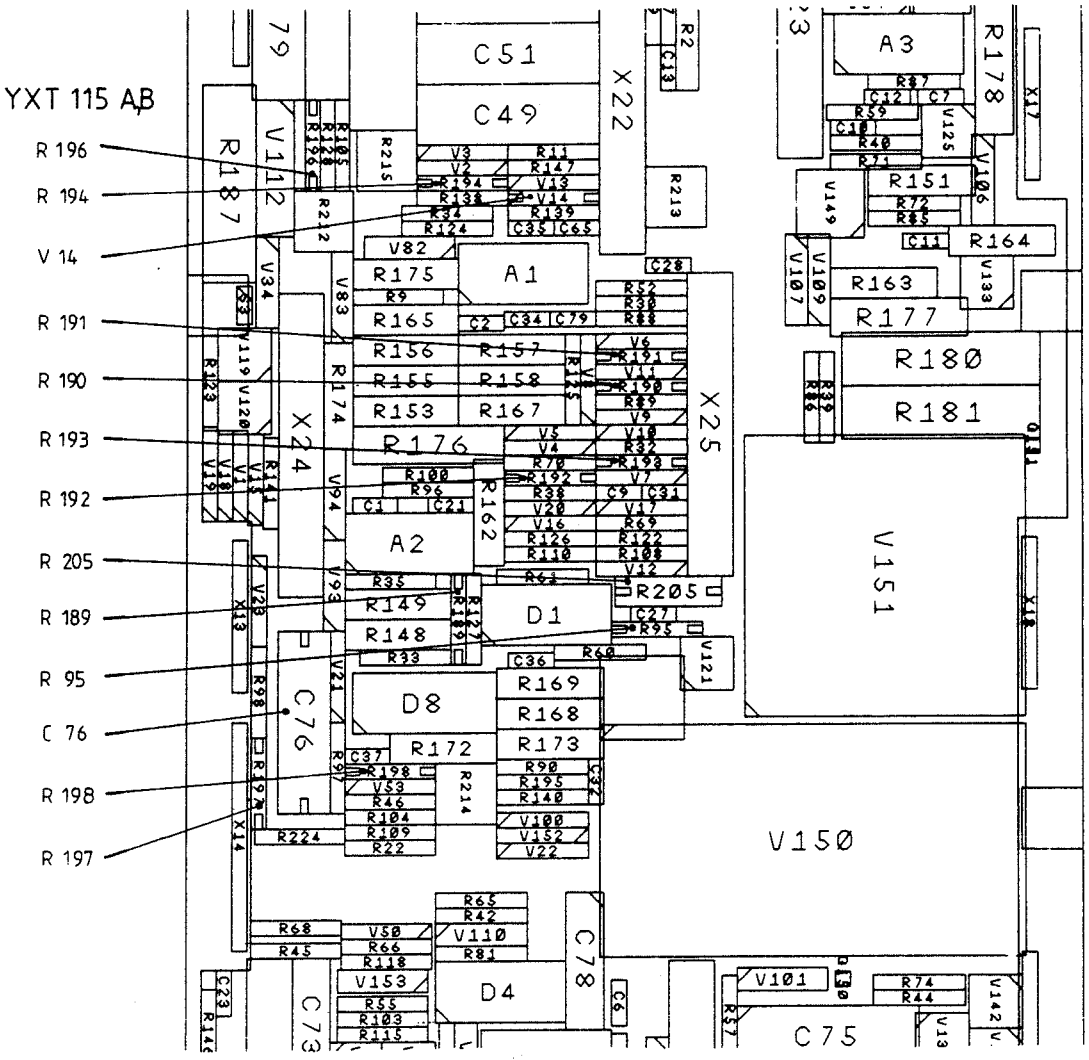


Fig. 4-2 Part of basic control unit YXT 115A, B

4.1
Supply voltage

A smoothed d.c. voltage of ±24 V is brought in to basic contro unit YXT 115 via ribbon cable connector X35. This voltage is stabilised and reduced to ±15 V to supply the electronics, and ±10 V to generate references.

4.1.1
Stabilising

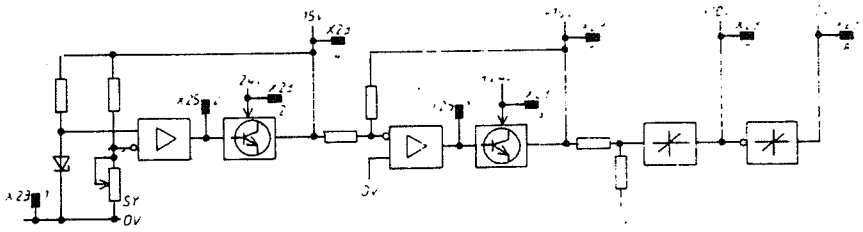


Fig 4-3

The -15 V supply is generated by means of a voltage regulating diode and an amplifier circuit as shown in fig 4-3. This voltage is then used as a reference to generate +15 V, +10 V a -10 V. Potentiometer SY affects all four voltages, and is set at the factory so that the +10 V supply is the most exact.

For protection against overloads and short circuits, there are current limiting circuits which begin to act at about 800 mA/+15 V, 350 mA/-15 V and 25 mA/±10 V. The accuracy of t ±10 V supplies is <0.2% for a temperature change of 5 °C, and <0.05% for a 5% variation in mains voltage.

4.1.2
Monitoring

The following circuit is provided to monitor Q1+ and Q1-:

(37)

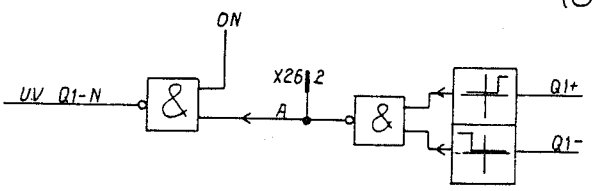


Fig. 4-4

If Q1+ or Q1- goes too low, A goes to "1". If the convertor i ON, ON is "1" and UV Q1-N goes to "0"; the convertor then trip On normal voltage switch-off, ON is "0" (convertor OFF), and A cannot affect UV Q1-N.

If the accessory "a.c. voltage monitor YXO 116" is included, its LED "~U<" gives an indication via signal UV Q1-N.

When the supply voltage is switched on, certain flipflops must be reset. To do this, a resetting signal is generated in the following circuit:

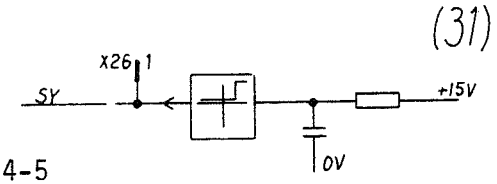


Fig. 4-5

The +15 V voltage is detected via a timing circuit so that the signal SY is "0" at switch-on, and only goes to "1" about 0.2 s after the voltage has reached +15 V.

## 4.2
## Armature convertor control

This includes trigger pulse circuits, current control and, for double convertors, blocking circuits.

### 4.2.1
### Trigger pulse circuits

The trigger pulse generator and thyristor bridge combined (loaded with a d.c. machine) have a transfer function as shown in fig. 4-6.

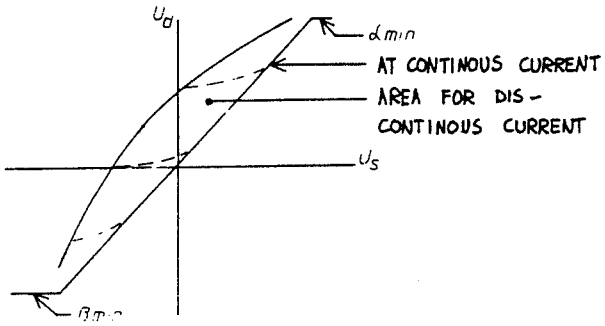


Fig. 4-6

The trigger pulses are generated in a trigger pulse generator YXX 154, and then go via a ribbon cable to a pulse transformer unit. There are three versions of this unit, depending on the rating of the thyristor bridge.

To produce a delay angle α, a control voltage $U_S$ is compared with an a.c. voltage which has its positive peak value at α = 0 °el; see figs. 4-7 and 4-8. If control is to be linear, this a.c. voltage must not contain any transients, and it is therefore filtered in RC filters with a total phase shift of 60 °el. The incoming a.c. voltage can be measured at test points X22:2-7 on YXT 115; the nominal peak value is 25 V. Fo accurate measurements, note that there is a high-frequency filter with a phase shift of 2 °el between test terminal X22 a connector X35.

There are A and B versions of YXT 115 for 50 and 60 Hz respectively. The only difference between the circuit boards in the values of the resistors in the RC filter, which must be different to obtain a 60 °el phase shift in both cases.

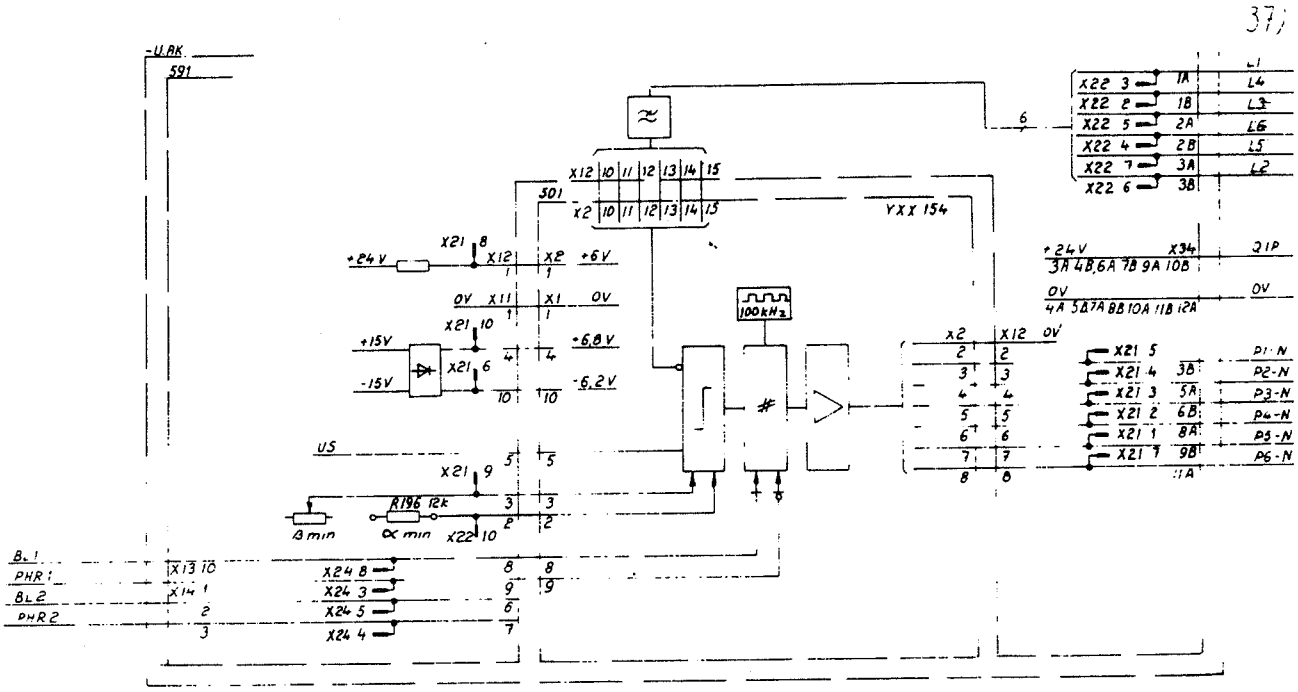


Fig. 4-7

Fig. 4-8 shows the phase positions of the voltages used to produce a delay angle for thyristor 1, connected to phase voltage L1.

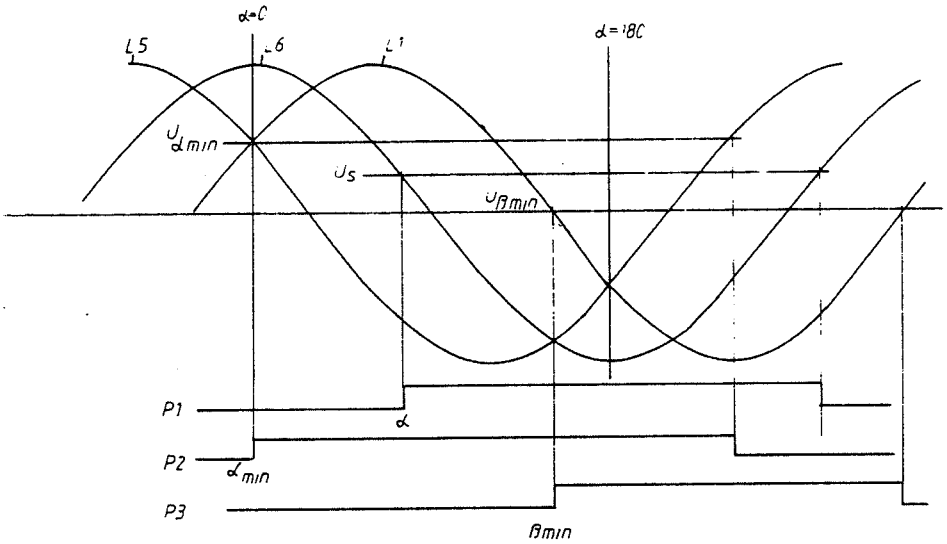


Fig 4-8

The control voltage $U_s$ is compared with the a.c. voltage L6, which is derived from phase voltage L5 (which leads L1 by 120 °el) and phase-shifted 60 °el in the filter. In this comparison, the pulse P1 is produced with its changeover point at α. α can be varied between α = 0 and α = 180 °el by varying the magnitude of $U_s$.

Since the a.c. voltage L6 that is compared with $U_s$ is proportional to the supply voltage, α will vary if the mains voltage varies. This means that the output voltage of the convertor is automatically kept constant without the need to alter $U_s$; this gives a much smaller direct current error than if compensation were to be applied via the current controller.

In order to limit the variation range of the delay angle, the limits $\alpha_{min}$ and $\beta_{min}$ are produced in a similar manner. The d.c. voltage $U_{\alpha min}$ is compared with L5, and the pulse P2 gives $\alpha_{min}$. The d.c. voltage $U_{\beta min}$ (0 V in the diagram) is compared with L1, and pulse P3 gives $\beta_{min}$. The pulses P1, P2 and P3 are then used in an LSI logic circuit to generate the final trigger pulse.

The length of the trigger pulse is the same as the conduction interval of the thyristor; since the thyristors in a three-phase-convertor relieve each other in two groups (1, 3, 5 and 4, 6, 2) as shown in fig. 4-9, the trigger pulses do likewise. For a constant control position the pulse length will then be 120 °el, but on adjustment towards lower α (more positive output voltage) the pulses become shorter, and for adjustment towards higher α (more negative output voltage) they become longer.

To enable the pulses to be handled by a pulse transformer, the are chopped up to form a pulse train with a frequency of about 100 kHz, and are amplified in a transistor stage.

The pulses to the six thyristors can be measured with an oscilloscope at test points X21:1-5, 7 on YXT 115; their phase positions relative to phase L1 (X22:3) must be as follows at full phase retard $\beta_{min}$, and at full phase advance $\alpha_{min}$.

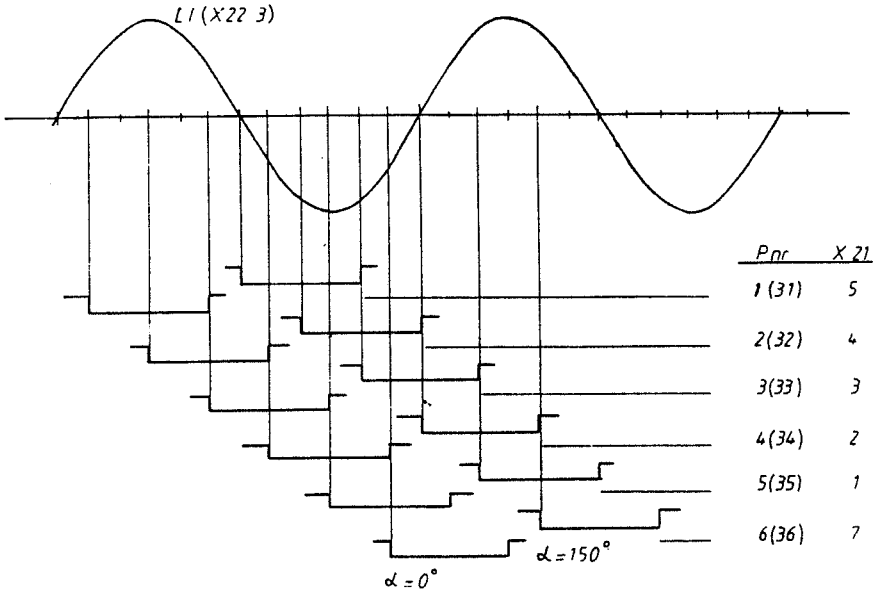


Fig. 4-9

The appearance of the trigger pulse at test point X21 is as shown in fig. 4-10.

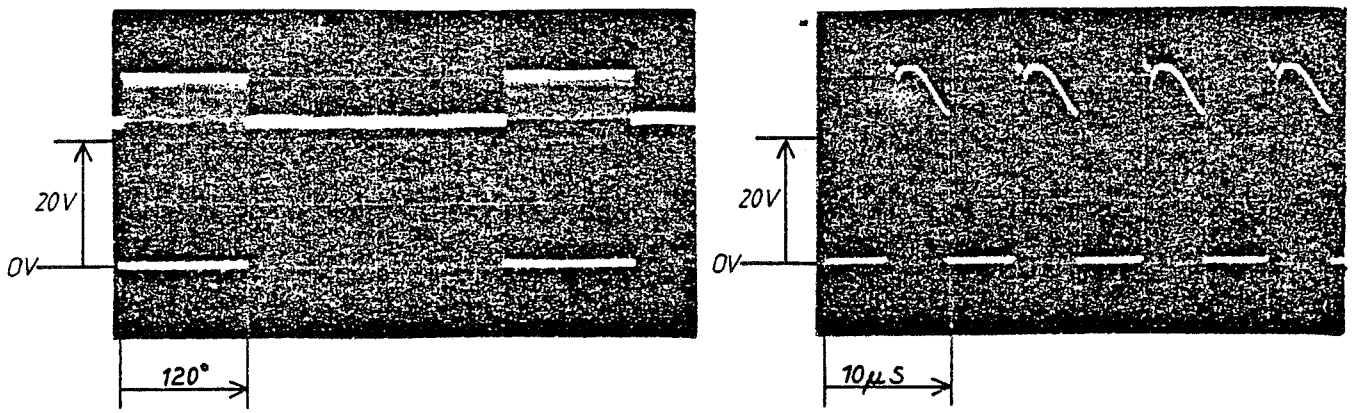


Fig. 4-10

The trigger pulse generator can be blocked (i.e. the trigger pulses can be removed) and phase-retarded (control towards $\beta_{min}$) by means of the signals BL1 and PHR1; see fig. 4-7. These signals are used for double convertors, and are described in detail in section 4.2.3.

$\beta_{min}$ can be set as shown in fig. 4-11 with the potentiometer "β" (normally 30 °el) and $\alpha_{min}$ can be set as shown in fig. 4-12 with R 196 (fig. 4-2) on solder tags (normally 0 °el). The voltmeter must have an internal resistance $R_i$ > 1 Mohm.

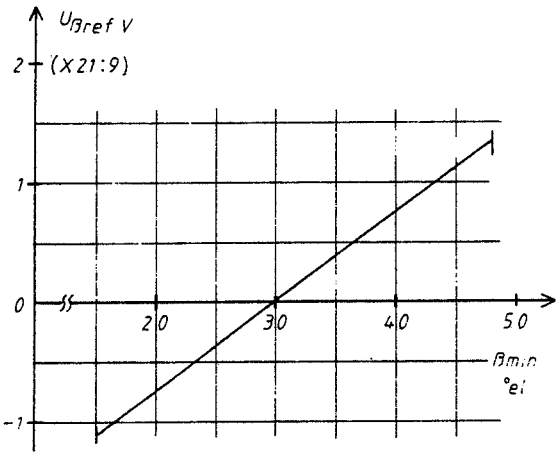


Fig. 4-11

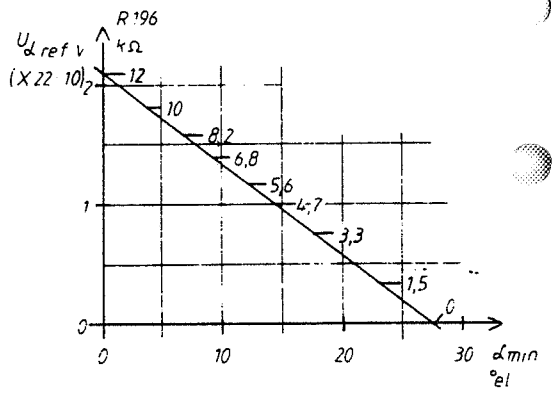


Fig. 4-12

The delay angle α is related to the control voltage $U_S$ as follows:

$U_S = 8.0 \times \cos\alpha$

at normal supply voltage, i.e. $U_S$ = 8.0 V, α corresponds to 0 °el.

The logic circuits of the trigger pulse generator are supplied with +6.8 V (X21:10) and -6.2 V (X21:6) from YXT 115. The power stage is supplied with +6 V (X21:8) from the same circuit board.

Trigger pulse transmission is described in Section 5.2.1.

## 4.2.2
## Current control

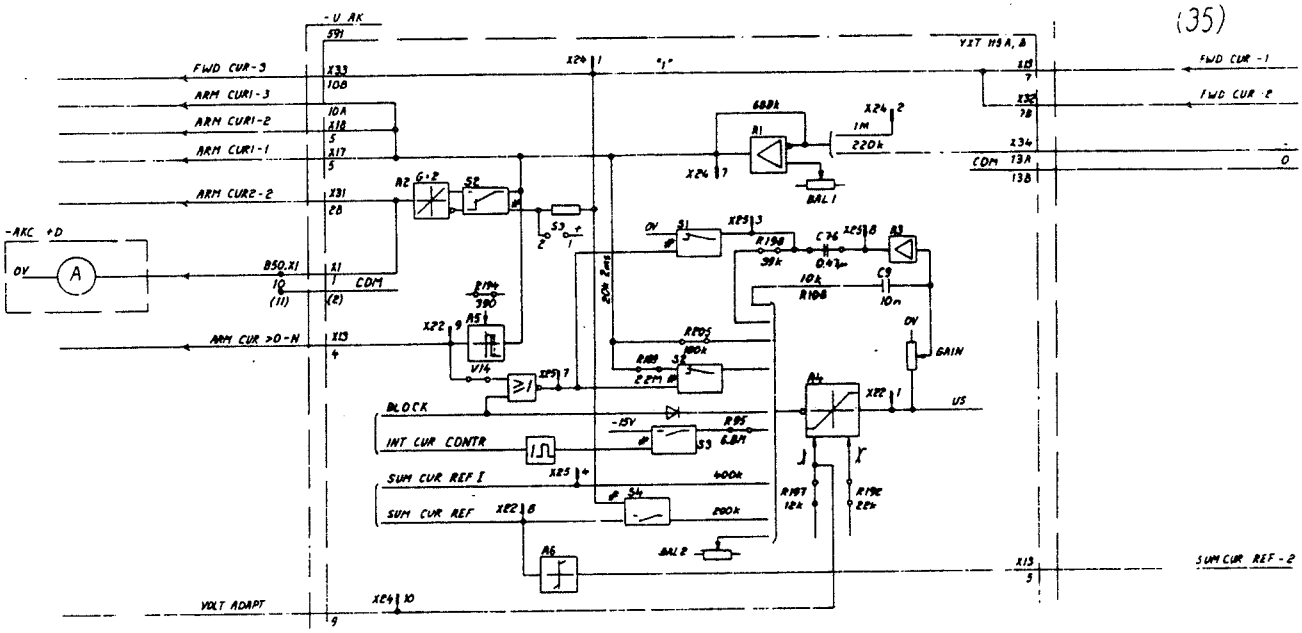


Fig. 4-13

### 4.2.2.1
### Current controller

The armature current is controlled in a current controller A4, which is controlled primarily by the references SUM CUR REF an SUM CUR REF I (sum current reference normal and inverted), and by the actual value signal ARM CUR 1. The value of ARM CUR 1 always positive at X24:7 with the level 2.5 V corresponding to $I_{dmN1}$. ARM CUR 1 is adapted in buffer amplifier A1, which is connected to the current measuring circuits in the thyristor unit (see Section 5.2.2). A1 has an extra input connected to X24:2, to which a negative signal can be applied to simulate armature current.

The current actual value is normally summed at A4 via 20 kohm 180 kohm, whilst the resultant reference is summed via 400 koh The level on the reference side is then 5 V, corresponding to $I_{dmN1}$. For a convertor with a rated current very much higher than the rated current of the d.c. machine, the level on the reference side can be adjusted upwards by reducing resistor R 205 (fig. 4-2). The current actual value before A1 must not be changed, since this would also change the settings of protections and ammeter.

Since the current actual value is always positive, regardless whether the current is flowing in the forward or reverse bridg the resulting reference must always be negative. Since the speed controller gives a negative reference for forward drivir and a positive reference for reverse driving, the reference mu be inverted for the reverse direction.

The reference is inverted via contact S4, which is controlled by the signal FWD CUR (positive for forward direction) from the blocking unit or field current reversal circuits. SUM CUR REF I ( the inverted current reference) is also connected in the forward direction, but is neutralised by the fact that SUM CUR REF is switched in with half the resistance, and therefore has twice the effect.

For RI-compensation in conjunction with emf regulation, and for ammeters, a polarised current actual value is required. The max. loading for the ammeter is 5 mA total, of which the internal loading is 2 mA. This is obtained via buffer amplifier A2 and contact S2; the function of S2 is to change the sign of the output signal of A2 in relation to the signal FWD CUR. In the forward direction A2 gives a positive signal (5 V corresponds to $I_{dmN1}$) and in the reverse direction it gives a negative signal. For field current reversal the signal FWD CUR must change the sign of the armature current reference, but not the sign of A2, and jumper link S3:1-2 must then be closed.

The signal BLOCK (phase-retard) forces the output signal of A4 down towards the negative limit, at the same time as S1 closes and permits rapid recharging of C76.

The limit on the output signal from A4 can be varied by means of resistors R192 and R197 (fig. 4-2); see fig. 4-14. The normal values are 22 and 12 kohm respectively, to limit $U_S$ to +8.7 V and -8.0 V respectively.

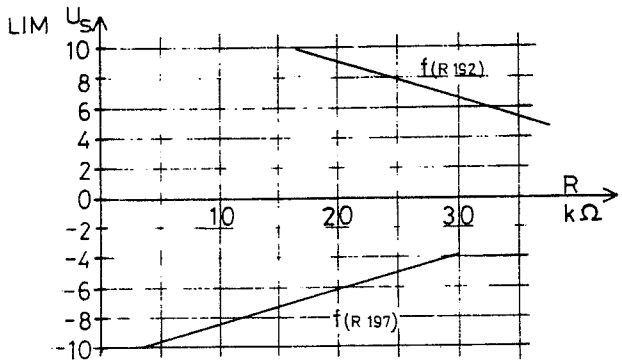


Fig. 4-14

For discontinuous current a larger change in delay angle is required than for continuous current in order to achieve the same current change. The effect of this from the control engineering point of view is that the gain ($\Delta U_D/\Delta U_S$) of the thyristor bridge and trigger pulse generator combination becomes increasingly lower, the more discontinuous the current. In order to maintain rapid regulation in the discontinuous region as well, the current controller must compensate by increasing the gain accordingly; this is known as adaptive current regulation. Adaptation is achieved by applying feedback to A4 in the form of double RC circuits, a fast circuit R108/C9 and a slower circuit R198/C76. The slow RC circuit can be disconnected by means of S1, and this happens in every current gap. The longer the current gaps, the more the fast RC circuit dominates.

S1 is controlled by current flipflop A5, which detects the gap: in the current actual value. The changeover level is proportional to the value of R194 (fig. 4-2). The standard value 390 ohm gives about 50 mV, corresponding to about 2% of $I_{dmN1}$. It may be necessary to reduce the level for motors witl a very high inductance, or to increase it for motors with a ve low inductance. If adaptation is not required at all, diode V can be removed. The output signal of A5, ARM CUR >0-N is also used in the blocking unit as a condition, on reversing.

The adaptation circuit causes non-linearity between the curren reference and the current actual value within the discontinuou range; this is compensated by contact S2 switching in an additional resistor, R189, for the current actual value in the current gaps.

The gain of the current controller can be varied over the rang 0.5 to approx 20 by means of the GAIN potentiometer.

The potentiometer BAL 1 is used to balance the zero-point erro of A1 (this is set at the factory).

BAL 2 balances the current control system to give zero current for 0 V at X22:8 (set at the factory).

A6 is a circuit which generates a step function (about 0.5 V) when the current reference passes through zero. The output signal SUM CUR REF-2 is used to detect the required current direction in the blocking unit.

When the current direction is to be changed in a double convertor, it must be possible to drive the current controller to the control voltage that corresponds to the new delay angle in order to avoid unwanted slack in the control system. This done by the blocking unit giving phase-retard, BLOCK, and generating a signal VOLT ADAPT which controls A4 via its negative limiting circuit.

Single convertors do not have the blocking unit, and to obtain quick control response on starting, an extra reference is connected for about 5 ms via the signal INT CUR CONTR and S3. This reference charges C9 to about 1 V, which is normally sufficient to give a low d.c. current in the thyristor bridge.

If the GAIN potentiometer is set low, it may be necessary to reduce R95 if rapid control response is required.

8

4.2.2.2
Current reference summator

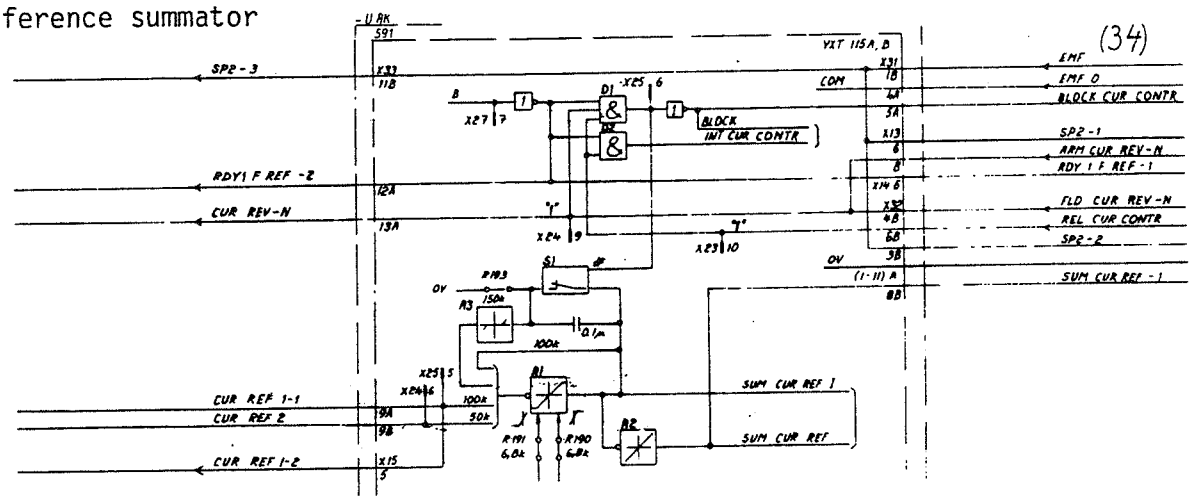


Fig. 4-15

The circuit has two inputs for current references, where CUR REF 1 is the normal reference that comes from the speed controller, and CUR REF 2 is an additional reference. The references are summed and inverted in A1, to give the signal SUM CUR REF I. Inverter A2 restores the original sign to the signal SUM CUR REF.

A1 has a limiting circuit in which the level can be altered by means of resistors on solder posts. R190 controls the positive limit and R191 the negative limit (fig. 4-2).

$/U_{lim}/ = 0.3 + 1.54 \times R$, where R is R190 or R191 in kohm.

Across A1 there is a circuit made up of A3, C28 and R193. It is used for indirect limiting of the rate-of-change of the armature current, as a function of the commutation capacity of the d.c. machine.

The reference rate-of-change can be set with R103 as shown in fig. 4-16, where N is the rate-of-change expressed as the number of times $I_{dmN1}$ per second ($I_{dmN1}$ corresponds to 5 V). This is set to 150 kohm at the factory, equivalent to about 20 times. The permitted range of variation is 10-200 times.

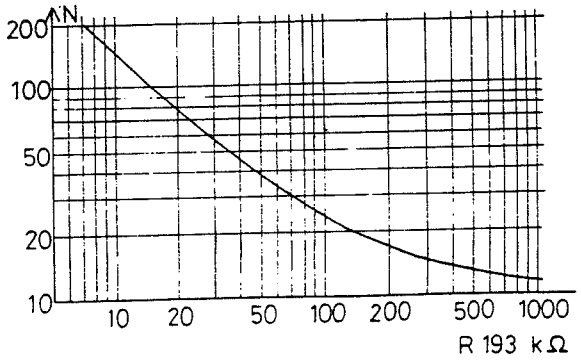


Fig. 4-16

4.2.2.3
Phase advance and retard circuits

The signal B on fig. 4-15 is the phase advance signal from the sequential control circuits ("0" at X27:7 corresponds to phase-advance). Phase-advance can be simulated if necessary b connecting X27:7 to 0 V.

This signal is used as follows after inversion:
- in D1 to turn on the current controller
- in D2 to give a short current reference (rapid control acti for single convertors)
- in X14:6 to give voltage adaptation (quick control response for double convertors) and
- in X33:12A to turn on the drive control equipment (e.g. spe controller).

In X24:9 there is another phase-advance signal ("1" for phase-advance) coming either from the blocking unit as ARM CUR REV -N (for double convertors) or from the field excit as FLD CUR REV -N (for field reversal). The phase advance signal is used as a condition in D1 and, via X33:13A, to maintain the ramp generator and speed controller.

The third phase-advance signal REL CUR CONTR (X23:10, where "1 corresponds to phase-advance) is used for field reversal, particularly with opti-torque drive, where it is necessary to delay the phase advance of the armature current controller relative to the phase advance of the speed controller.

The armature convertor must not deliver current until the flux in the d.c. machine has changed sign.

On field reversal as well, this phase-advance signal gives a short-term current reference for rapid control response in the current controller

4.2.2.4
Performance

Typical static control error of the current control system including reference summator as a percentage of $I_{dmN1}$:

| | |
|---|---|
| emf -100 to +100% | 0.12% |
| supply voltage 5% | 0.01% |
| ambient temperature 5 °C | 0.07% |

For a 10% instantaneous supply voltage change, the transient deviation of the direct current is <15% of $I_{dmN1}$.

The linearity error is <0.6% of $I_{dmN1}$ (when the limit for continuous current is <30% of $I_{dmN1}$).

The rise time for a step response with the equipment well adjusted is 10-15 ms for continuous and discontinuous current.

## 4.2.3
## Blocking circuits

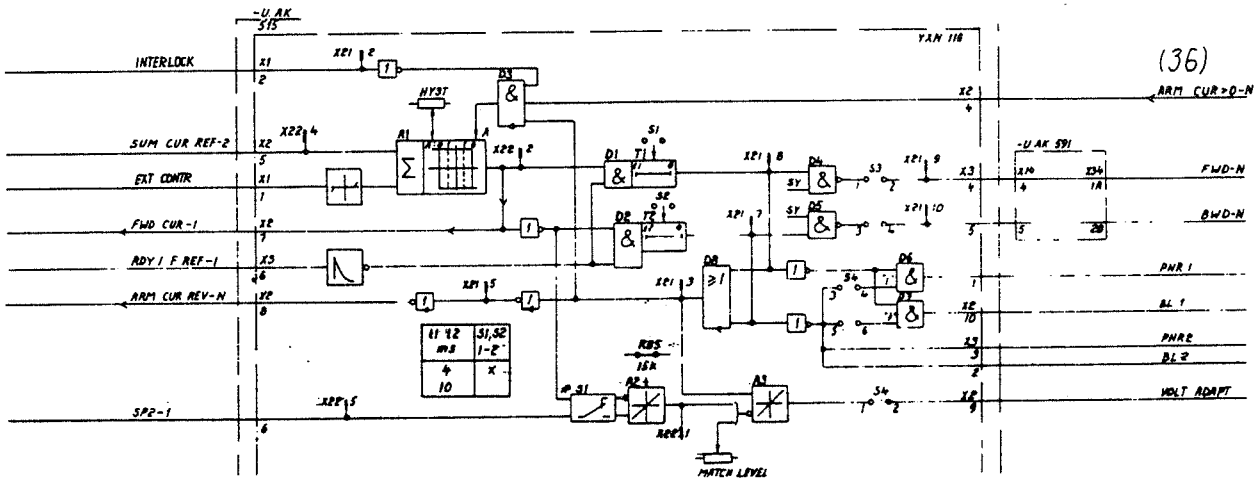


Fig. 4-17

Blocking unit YXN 116 is only fitted to double convertors. It switches the trigger pulses to the correct thyristor bridge on the basis of the sign of the signal SUM CUR REF -2 which is made up of the current reference from the speed controller plus any extra current reference. The current reference goes to flipflop A1; the hysteresis of this flipflop is set with the potentiometer marked HYST. Via X1:1, flipflop A1 can be forcibly controlled with +24 V (reverse) or -24 V (forward) regardless of the sign of SUM CUR REF -2.

A1 is interlocked by the signal A from D3, and can only change over when A is "1". Interlocking occurs when the external signal INTLOCK is "1", and when the signal ARM CUR >0-N is "0", and during reversal, i.e. when both convertor bridges are blocked. The signal ARM CUR >0-N goes to "1" when the current actual value falls below a given low level (normally 2% of $I_{dmN1}$).

The output signal of A1, FWD CUR is "1" for forward current direction, and controls timing circuits T1 and T2 via D1 and D2. The output signals of T1 and T2 are "1" for deblocking and "0" for blocking, where T1 controls the forward bridge and T2 the reverse bridge. A delay is obtained only when the input signal goes from "0" to "1". The outgoing bridge is therefore instantaneously blocked, whilst the oncoming bridge is deblocked after the time t1 or t2, as the case may be. Normally t1 and t2 are about 10 ms, but can be shortened to about 4 ms by connecting jumper links S1:1-2 and S2:1-2. The 4 ms blocking time may only be used when the system includes double trigger pulse generators. 8

The deblocking signals go via D4 and D5, where they are inverted, so that "0" at test point X21:9 is deblocking for th forward bridge and "0" at X21:10 is deblocking for the reverse bridge. Deblocking can be prevented by removing jumper links S3:1-2, 3-4. When the supply voltage is switched on, blocking is obtained in both directions via the signal SY in D4 and D5.

D8 detects when both directions are blocked, and blocks the control circuits via the signal ARM CUR REV -N.

Normally there jumper links at S4:3-4, 5-6 and in this case PH 1 and BLOCK 1 control the trigger pulse generator in both the forward and reverse direction. When a double trigger pulse generator is fitted, the jumper links must not be fitted. In this case PHR 1 and BLOCK 1 are used for the forward direction and PHR 2 and BLOCK 2 for the reverse direction.

The signal from D8 controls the voltage adaptation circuit of the current controller via A3 as follows: A3 gives a positive output signal on phase-advance, and there is no voltage adaptation. On phase-retard A3 follows the voltage from A2.

A2 is controlled by the signal SP 2-1, which is made up of the speed actual value, or, with automatic field weakening, the em actual value. The sign is controlled by S1 so that A2 always gives a positive voltage for rectification and a negative voltage for inversion. The output voltage of A2 must be 6.4 V for max emf (speed) and therefore the gain of A2 can be increased by altering R65 in cases where the max emf is equivalent to less than 10 V at X22:5, as shown in fig. 4-18. For this the max emf must be equal to the rated d.c. voltage U of the convertor. If the max emf is lower, the output voltage of A2 must be correspondingly reduced, so that for max emf = 8 of $U_{dN}$, for example, R65 is selected to be 0.8 times the value obtained from fig. 4-18.

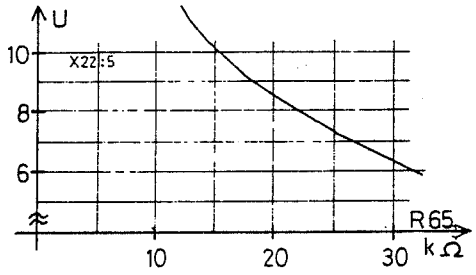


Fig. 4-18

With MATCH LEV set to min (fully anticlockwise) the control voltage adaptation obtained gives a very low current at the bottom of the discontinuous region (see fig. 4-6). If faster control response is required, and if higher current is acceptable, the control voltage can be increased by adjusting MATCH LEV, but it must not be increased so much that the current becomes continuous. Voltage adaptation can be completely disabled by removing jumper link S4:1-2.

On phase-advance of the equipment, both the forward and reverse directions are blocked by means of the signal RDY F REF 1-1, a timing circuit (about 0.5 ms) and D1, D2 so that voltage adaptation is forced, giving a fast control response.

There is also a re-deblocking circuit (not shown on the diagram in fig. 4-17) which re-deblocks the previously conducting thyristor bridge if current is indicated in the blocking interval for more than about 0.4 ms. The reversing sequence is restarted from the beginning as soon as zero current is indicated once again.

### 4.2.4 Gain adaptation unit

This unit is used to control the gain in the speed control With automatic field weakening or the Opti-torque system, for instance, the loop gain and therefore the control response speed drop when the flux in the d.c. machine decreases ($M = k \times \emptyset \times I_R$). By permitting the flux to control the gain of the speed controller (indirectly via the field current) by means of the gain adaptation unit, the control response speed can be maintained (flux adaptation).

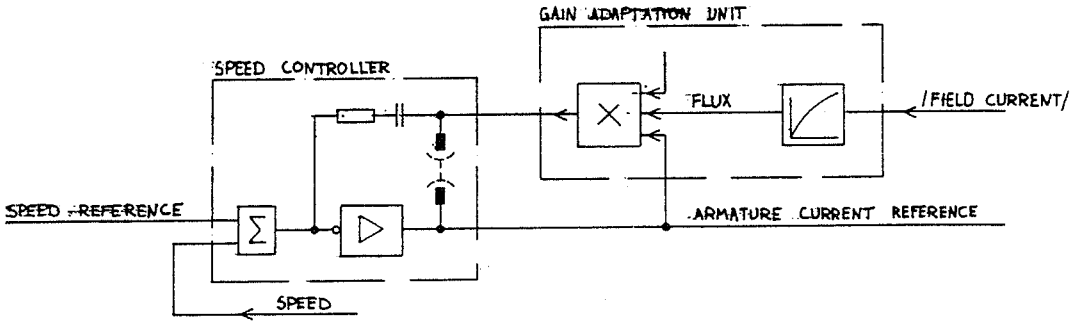


Fig 4-19

The actual value of $\emptyset$ is multiplied by the $I_R$ reference in a multiplier, and the output signal of this multiplier controls the feedback across the amplifier in the speed controller. This is shown schematically in fig. 4-19. The speed controller can then operate with a fixed voltage across its feedback components, for a given torque requirement. If the actual value of $\emptyset$ drops, the $I_R$ reference will increase, and this means higher gain.

The multiplier is used in a similar manner to control the gain on the basis of an external signal, for varying moment of inertia of the load, for example where there is a mechanical gear unit with different ratios (gain switching).

4.2.4.1
Flux adaptation

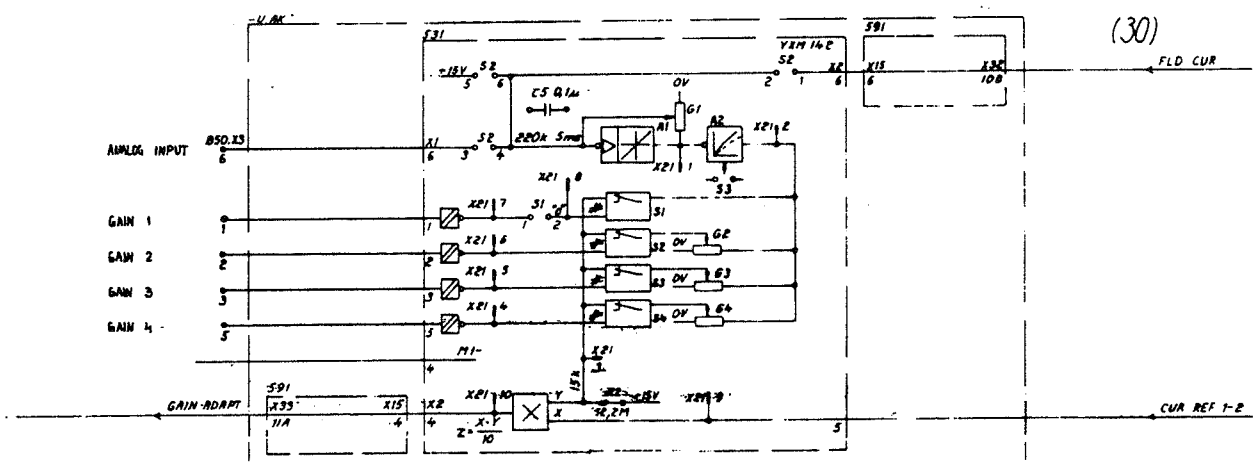


Fig. 4-20

The output of the speed controller is connected via the signal CUR REF 1-2 to input X of the multiplier, and the feedback is connected by the signal GAIN ADAPT to output Z of the multiplier. The transfer characteristic of the multiplier is Z = X x Y x 0.1; this enables it to work with 10 V signals at both the inputs and the outputs.

For flux adaptation, the Y-signal is connected from the functi generator A2 via contact S1, which is closed when strapping S1:1-2 is removed. The field current actual value FLD CUR goe via strapping S2:1-2, and matching amplifier A1, to function generator A2.

Before A1 there is a filter, the time constant of which can be altered with C5. In standard form, C5 is 0.1 µF, giving 5 ms. The gain of A1 can be set with G1 from 0.5 upwards. The outpu voltage of A1 must always be set so that -10 V corresponds to the rated d.c. current of the field, to ensure that the break points of the function generator come at the correct levels.

8

The purpose of the function generator is to simulate the excitation curve of the d.c. machine. There are two different excitation curves, one for d.c. machines of type LAB (1) and one for others (2); see fig. 4-21.

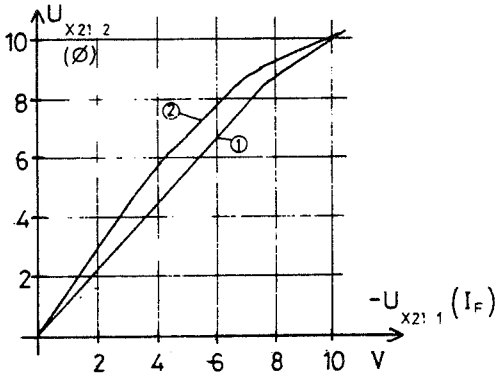


Fig. 4-21

To obtain curve 2, insert jumper links S3:1-2, 3-4, 5-6.

There are two resistors at the Y input of the multiplier. These give a positive residual voltage of about 0.1 V, thus setting a maximum limit on the speed controller gain increase of about 100. R2 is mounted on solder tags; the gain can be reduced by fitting a lower value resistor.

4.2.4.2
External analog control

In this case the input signal to A1 is taken from X1:6 via jumper link S2:3-4. The filtering before A1 should be proved by increasing C5. In other respects operation is as described in 4.2.4.1.

4.2.4.3
Gain switching

For gain switching only, the input signal to A1 goes via jumper link S2:5-6 from +15 V. Four different gains can be set with potentiometers G1-G4, which are switched in by contacts S1-S4 (jumper link S1:1-2 must be in position). S1-S4 are controlled by optocouplers to give isolation, and therefore greater immunity to interference. The optocoupler inputs are connected to M1+ (110/115 V) when closed. In other respects operation is as described in section 4.2.4.1.
"Gain switching" can be combined with either "flux adaptation" (S2:1-2) or "external analog control" (S2:3-4).

## 4.3 Sequential control

The purpose of the sequence control equipment is to interactively control the various parts of the convertor. The sequential control is located on basic control unit YXT 115. The following signals are used for sequential control:

| | Order | Acknowledgement | Remarks |
|---|---|---|---|
| Signals from above/upwards in the control heirarchy | ON/OFF | IND ON<br>RDY 1 F RUN | Pusbuttons with signal lamp<br>Signal to drive control equipment |
| | START/(STOP) | RDY 1 F REF | Signals to/from drive control equipment |
| | TRIP | IND TRPD CONV | Signal lamp in DEBL push-button |
| Signals from below/downwards in the control heirarchy | FAN ON | ACK FAN | Convertor fan and external fans |
| | FLD EXC ON | >MIN FLD CUR | Field exciter ON |
| | MCONT ON | ACK MCONT | Main contactor armature convertor ON |
| | REL | | Release of analog control circuts |

Order signals and the corresponding acknowledgements are mainl divided among four different control objects:

1. Switch-on of fans
2. Switch-on of field exciter
3. Switch-on of main contactor for armature supply
4. Release of analog control circuits

The convertor can be switched on in two stages via the two inputs ON and START. The purpose of the ON input is to switcl on basic functions having a long start-up time, to prepare the convertor. START gives final start-up with phase-advance and reference connection.

Different types of drive system have different requirements, for example, the main contactor for the armature convertor may be controlled by ON or START.

To give freedom of choice in this respect, it is possible to choose between four starting sequences A-D by means of programming links (S2). Starting sequence A gives direct star and sequences B-D give divided start.

| Control object (contr. by ON or START) | | | | Starting sequence | Strappings (S2) | | | | | | |
|---|---|---|---|---|---|---|---|---|---|---|---|
| Fans | Field exciter | Main cont. for arm. convertor | Ph. adv. arm. convertor | | 1-2 | 3-4 | 5-6 | 7-8 | 9-10 | 11-12 | 13-14 |
| ON | ON | ON | ON | A | | X | | | X | X | |
| ON | ON | ON | START | B | X | X | | | | | |
| ON | ON | START | START | C | X | | X | | | | |
| ON | START | START | START | D | | | X | X | | | X |

Direct start, starting sequence A, is the standard version, and is used in drive systems where divided start is not required, and the entire convertor is started with an ON signal.

Starting sequence D is used when the d.c. machine is self-cooled, and must not carry full field current when stationary.

When sequential control unit S, M or A is used, the equipment is supplied in standard form with jumper links inserted for divided start, starting sequence C.

4.3.1
Control, fans

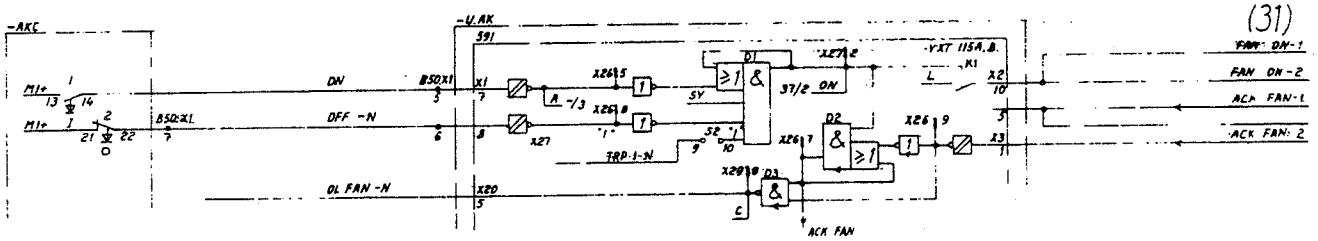


Fig. 4-22

Fan starting is the first point in the starting sequence.

The fan contactors are energised by relay K1, which connects 110/115 V a.c. to X2:10. K1 is controlled by holding circuit D1, and picks up when X27:2 is "1". D1 gives "1" when On, OFF-N, D2 SY and TRIP 1-N are "1". ON need only be "1" for a short time because of the holding function. ON is interlocked by the signal D which is the same as INTLK TRP RES. This means that with divided start the ON-order can not be executed if the START order is applied. SY is used to reset D1 when the supply voltage is switched on (see 4.1.2) and is normally "1" TRIP 1-N comes from the tripping circuits, and switches off the fans (and the entire convertor) on tripping when jumper link S2:9-10 is fitted. The link must be fitted when the START signal is not used (starting sequence A) to prevent the convertor from starting in an uncontrolled manner immediately on deblocking after tripping.

The signals ON and OFF-N give 110/115 V d.c. at X1:7 and X1:8 respectively, and then go to D1 via isolating optocouplers. These signals are normally obtained from spring return pushbuttons in the instrument unit or in an external unit, but can also be controlled by a relay contact. In this case X1:7 and X1:8 are wired together and connected to the relay contact; ON is represented by "1" and OFF by "0".

When all the fan contactors have closed, an acknowledgement signal 110/115 V d.c., appears at X3:1. The acknowledgement signal is given by auxiliary contacts on the different contactors. The thyristor bridge fan connectors are always connected between M1+ and X2:5.

On small thyristor bridges without fan ($I_{dmN1} \leq 140$ A) M1+ is connected directly to X2:5, which is used simply as an interconnection point. The fan contactors on the "control unit, external fans" are connected in series between X2:5 and X3:1.

When there is no external fan, a jumper wire is connected between X2:5 and X3:1. The fan acknowledgement signal goes via optocouplers to holding circuit D2, which gives a "1" (signal ACK FAN) as soon as an acknowledgement is received. The signal ACK FAN is then used to give an ON order to the field exciter. ACK FAN will be "1" as long as D1 gives an ON order, since D2 has a self-holding circuit for the fan acknowledgement signal.

4.3.1.1
Fan monitoring

The thyristor bridge fan motors have built-in thermally-operated contacts, ($I_{dmN1} \leq 1400$ A) and the "control unit external fans" contain thermal relays which trip the relevant contactor if ther is an overload. When the acknowledgement signal from the contact is removed, this is indicated at D3, the output of which goes to "0", and trips the convertor. This is possible because D2 continues to give a "1" as an output signal (because of the holding circuit) as long as the fans receive an ON order.

4.3.2
Control, field exciter

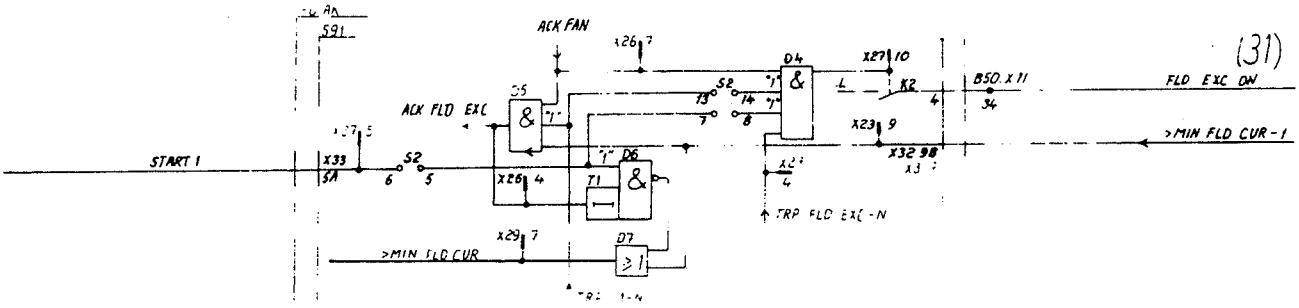


Fig 4-23

When the fans are acknowledged, the signal ACK FAN is given, an this signal is used to give an ON order to the field exciter vi D4 and relay K2. The field exciter is always controlled in the same way (the field contactor is operated) whatever type of field exciter is used.

Other conditions at D4 are:

1. Tripping signal for field exciter faults TRP FLD EXC-N.
2. Tripping signal for general faults, TRP 1-N, which is linked in with starting sequence D.
3. The start order START 1 from the drive system control equipment, which is linked in with starting sequence D.

When field current is indicated in the field exciter, an acknowledgement is received in the form of the signal >MIN FLD CUR-1; D5 then gives "1" and the signal ACK FLD EXC is passed on to start the armature convertor.

4.3.2.1
Minimum field current monitoring

The field current is monitored by circuit D7 in conjunction with timing circuit T1. If the acknowledgement signal >MIN FLD CUR-1 goes to "0" without an OFF order having been given ("0" at ACK FAN or TRP 1-N), both inputs to D7 go to "0" for about 30 ms (T1), and the convertor is tripped.

4.3.3
Control, armature convertor

Armature convertor control is divided up into two stages: control of main contactor and control of analog circuits .

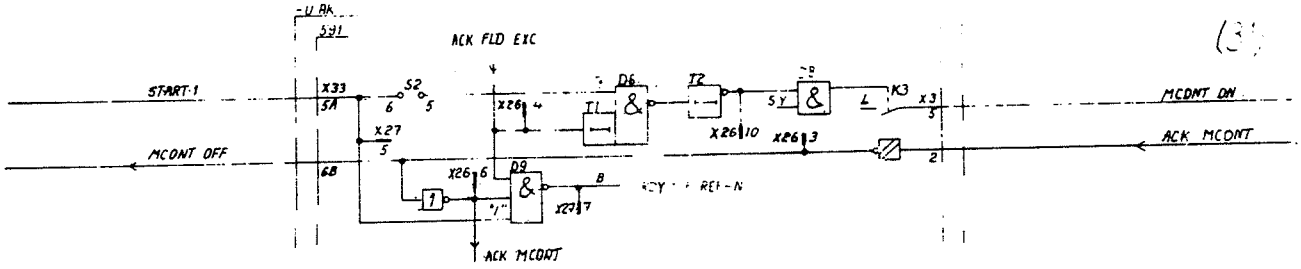


Fig- 4-24

When the signals ACK FLD EXC and (on starting sequence C and D) START 1 are "1", the input signal to T2 goes to "0". After about 15 ms, relay K3 picks up at D8, and the contactor for the armature convertor bridge closes. D8 includes an interlock with signal SY (supply voltage on) so that K3 cannot close while the auxiliary voltages are is building up after switch-on.

After acknowledgement of contactor closing (and START 1) the analog control circuits are released via D9 with "0" at X27:7. To simulate release of the analog control circuits without the convertor switched on, 0 V can be applied to X27:7.

When the armature convertor is to be switched off, ACK FLD EXC goes to "0", and the analog control circuits receive an instantaneous blocking order. The OFF order to the contactor is delayed by about 100 ms in T1 and T2, to give time for the current to be reduced to zero, by inversion and feedback to the mains supply, before the connection to the mains supply is broken. 8

The acknowledgement from the contactor is passed on to the drive control equipment in the form of the signal MCONT OFF, where it is used for dynamic braking.

4.3.4
Indication ON, ready for running

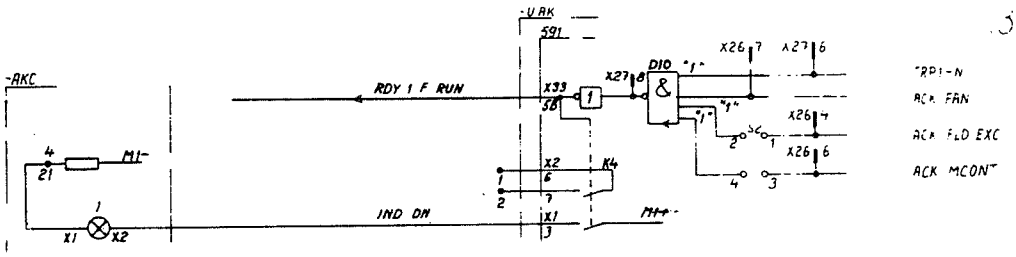


Fig. 4-25

The objects controlled by the ON signal must be acknowledged v IND ON (lamp in ON pushbutton) and RDY 1 F RUN (for drive control equipment). In addition there is a free contact connected to X2:6, X2:7, with ratings 250 V 5 A a.c., 250 V 30 d.c., max fuse rating 6 A.

With starting sequence D, only the fans are started by the ON signal (see table, Section 4.3) and in this case jumper links S2:1-2, 3-4 must not be fitted. When the fans are acknowledge with the signal ACK FAN, and the convertor is not tripped, the signals RDY 1 F RUN and IND ON are obtained.

With starting sequence C, the field exciter is also controlled by the ON signal, and its acknowledgement, ACK FLD EXC, must b linked in with S2:1-2.

With starting sequence A or B, the main contactor must also be acknowledged and linked in with S2:3-4.

RDY 1 F RUN and IND ON can be simulated by connecting X27:8 to 0 V.

8

4.4
Protection, monitoring and fault indication

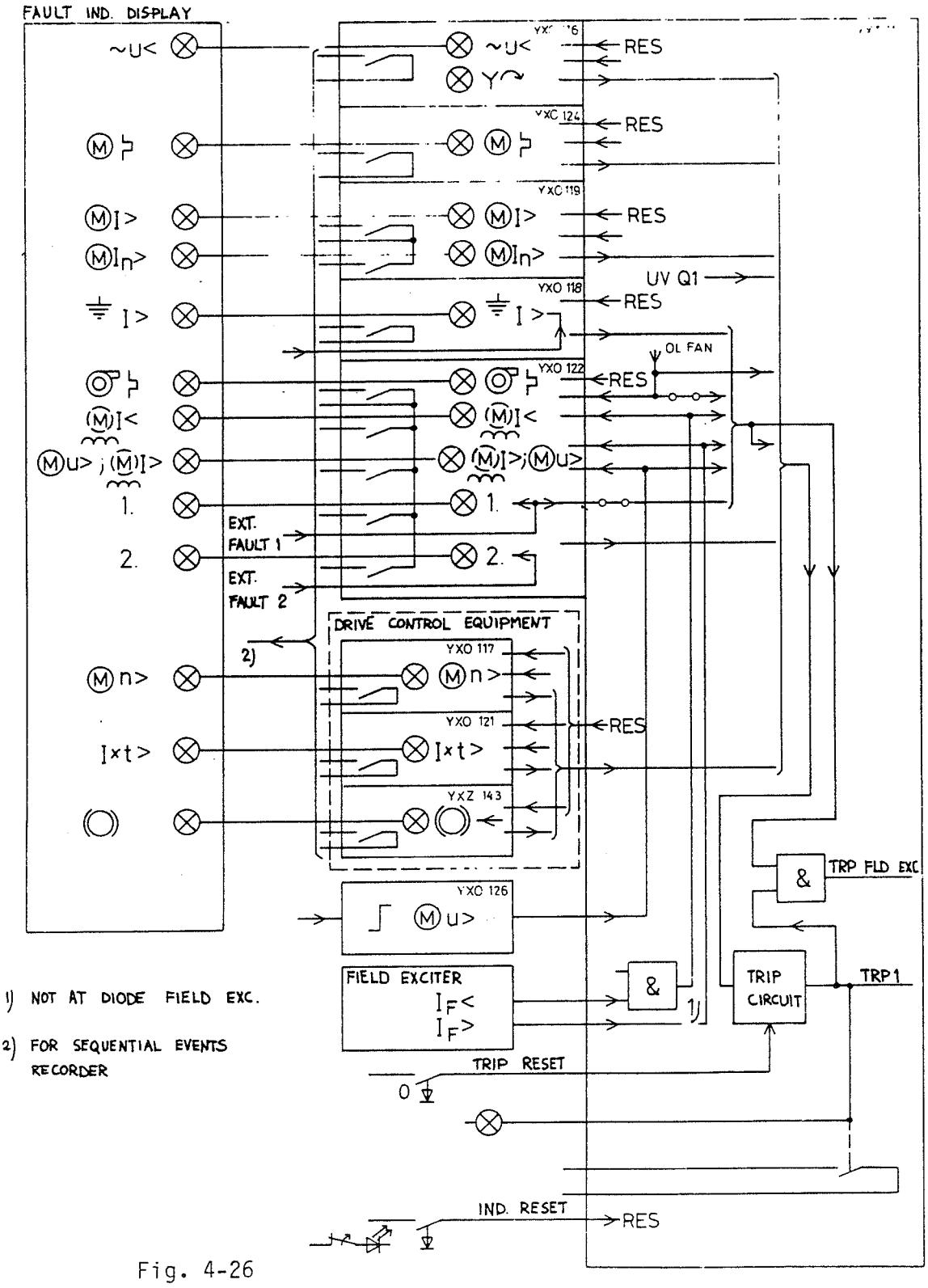


Fig. 4-26

## 4.4.1
## Tripping circuits

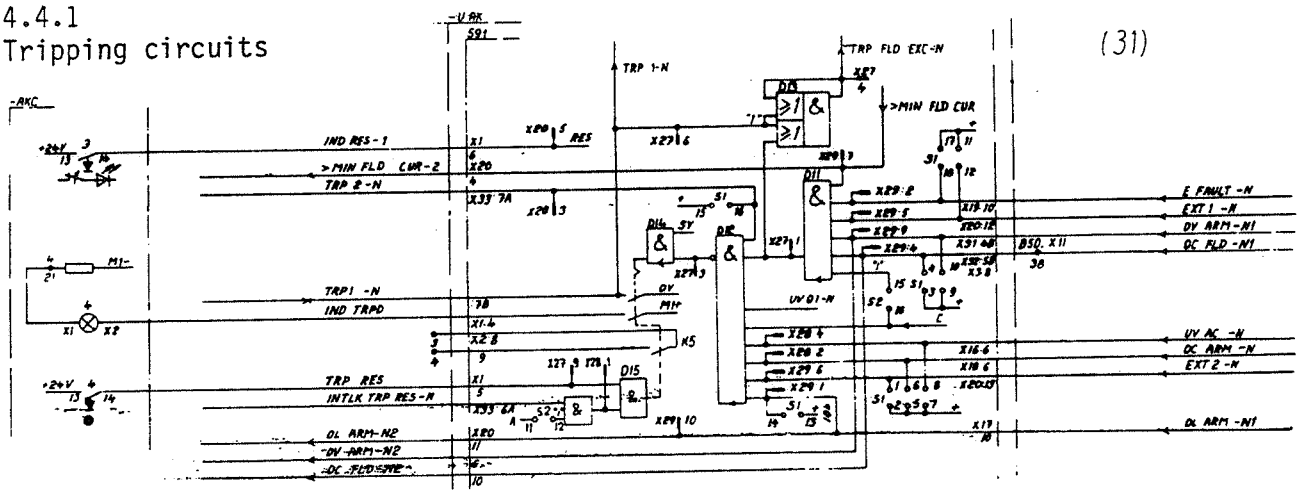


Fig. 4-27

The various fault signals go to D11 and D12 with a signal leve of "1" for normal service and "0" for faults. The inputs have an "active zero"; this means that if contact is lost with the relevant protection circuit, the input goes to "0" and trips t convertor. When a protection circuit is not fitted to a particular system, the relevant input must be linked to +15 V give a "1".

The fault signals at D12 give general tripping (phase-retard a opening of main contactor); the fault signals to D11 also swit off the field exciter. The fault signal for fan overload, C, normally gives both general tripping and exciter tripping, but exciter tripping can be prevented by removing jumper link S2:15-16. This can be used in starting sequences B and C, in which the jumper link can be removed when dynamic braking is used. However, it is important to bear in mind that not all d.c. machines are suitable for full field current when stationary, without fan cooling.

With starting sequences A and D, all fault signals cause fiel exciter tripping.

On tripping, memory relay K5 picks up, the signal TRP 1-N goe to "0", the signal lamp in the deblocking pushbutton lights u and a free contact between X2:8-9 (contact ratings 250 V 5 A a 250 V 30 W d.c., max fuse 6 A) closes. K5 remains in the tripped position until TRIP RESET is pressed, even if the sup voltage is lost. As an extra safety precaution, the tripping signal TRP 1-N, goes through (not shown on the diagram) as lo as the fault signal remains, even if K5 is not working.

8

TRIP RESET can be interlocked in D15 by two signals. One of these, INTLK TRP RES -N, comes from the drive control equipment, and means that there is a signal at the START input. If the trip reset were not interlocked, the system would start up immediately when the trip reset button was pressed. In starting sequence A, there is no START order, and OFF is given on tripping. For the same reason as above, the ON signal must not be present when the trip reset button is pressed. This is interlocked by means of signal A.

The field exciter is tripped via holding circuit D13, which gives a "0" tripping, when D11 is "0" and K5 has picked up. D13 is reset by K5.

4.4.2
Fault indication

On each protection and monitoring unit there is a memory relay which is energised by the fault signal. The relay lights an LED for fault indication on the relevant unit. The relay is also connected to a screw terminal block so that an external fault signalling panel can be connected.

The LEDs are powered from a +24 V supply Q1I which is isolated from Q1+ by a diode. To find out which fault signals are indicated even if the power supply has failed, the LEDs can be separately powered with +24 V from series-connected flashlamp batteries, for instance, by connecting the batteries to Q1I via test point X23:6 on YXT 115.

To allow the various fault signals to be fed to a sequential event recorder, there is a second contact in the memory relay, electrically isolated from other circuits. The sequential event recorder is connected to a separate type RTXG connector at which these signals are grouped. The connector is designed for max 60 V/20 mA resistive load, and screened cable must be used. There is a 100 ohm resistor in series with each relay contact.

The fault signals are reset by means of the signal RES, independently of the reset of the tripping relay.

## 4.4.3
## Convertor indication unit

(33)

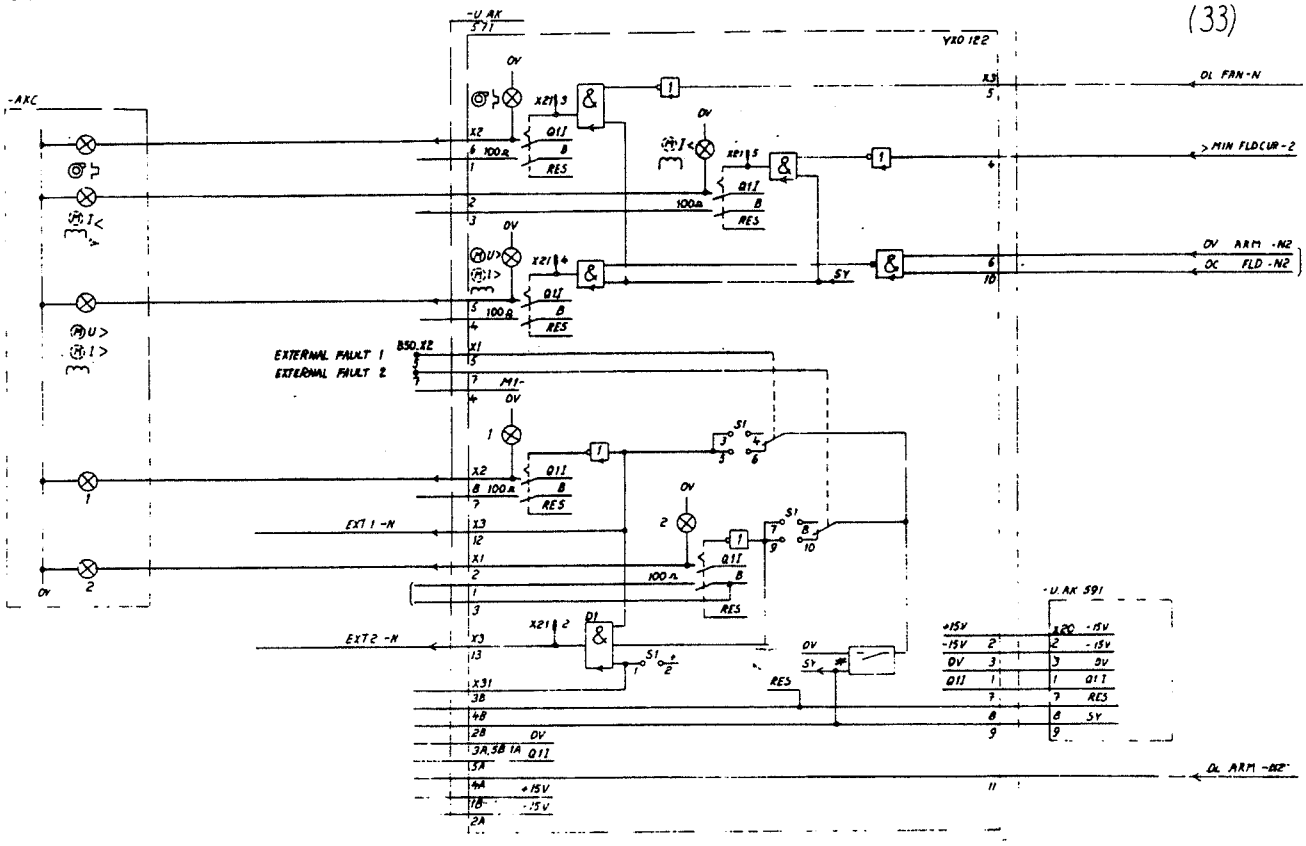


Fig. 4-28

The convertor indication unit, YXO 122, is used when it is necessary to indicate a number of fault signals which are not indicated elsewhere.

| | | |
|---|---|---|
| This applies to: | fan overload | OL FAN-N |
| | low field current | >MIN FLD CUR-2 |
| | armature overvoltage | OV ARM-N2 |
| | field overcurrent | OC FLD-N2 |

OV ARM-N2 and OC FLD-N2 are indicated by the same LED.

The fault signals are normally "1" and go to "0" if a fault occurs; the relevant memory relay picks up at the same time. The memory relays are interlocked with the signal SY to preven spurious indication at switch-on.

In addition to these four indications, there are two circuits for external faults, with inputs at X1:5 and X1:7. The input circuit is electrically isolated from the rest of the electronics by means of a relay, and is controlled by an external fault contact placed between the input and M1+.

With jumper links in positions S1:3-4, 7-8, a fault signal is obtained when the external contact closes for a fault. With jumper links in positions S1:5-6, 9-10, a fault signal is obtained when the external contact opens for a fault. The fault signals go via D1, and when the signal EXT 2-N goes to "0", general tripping is obtained.

EXT FAULT 1 can also trip the filed exciter by means of the signal EXT 1-N, if jumper link S1:11-12 on YXT 115 is removed. External faults are indicated in the same way as other faults.

When the convertor is provided with overload protection of RVAB type and/or voltage supply earth fault protection of RAEUB type, these are normally connected at input X1:5 (EXTERNAL FAULT 1).

A number of signals are brought out to X31 so that an additional unit for external fault can be connected.

4.4.4.1
Overload protection YXO 124

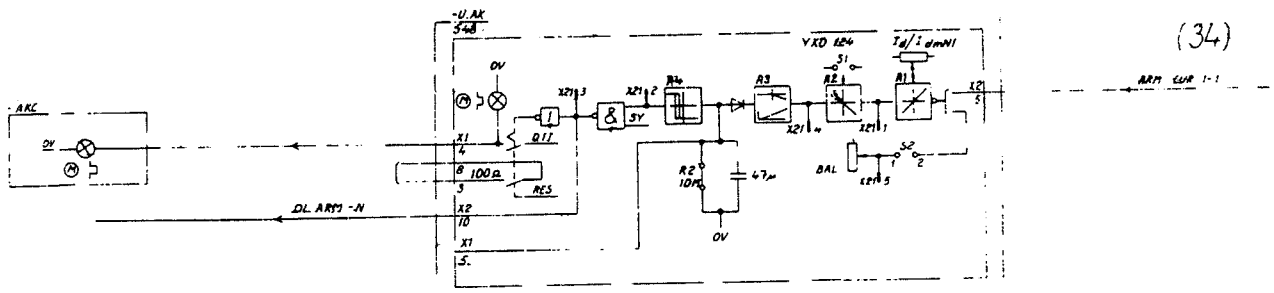


Fig. 4-29

The overload protection circuit is made up of a buffer amplifier A1, for matching to rated current, a function generator A2, to simulate the time/overcurrent characteristic of the d.c. machine, an integrator A3, a level detector A4, and indication circuits. The protection must be set for whichever of the drive components (d.c. machine, d.c. cables, thyristor unit or supply connection) has the lowest rated current $I_{dmN}$; generally this is the d.c. machine. Unless otherwise stated on the "List of adjustments", the protection is set at the factory for whichever unit of the convertor (thyristor unit or supply connection) has the lowest rated current.

The overload protecttion detects the armature current actual value ARM CUR 1-1, which is always positive, and has a level of 2.5 V (test point 591.X24:7) corresponding to $I_{dmN1}$ (rated current of thyristor unit). The armature current can be simulated with a negative voltage on test terminal 591.X24:2.

Before setting A1, remove jumper link S2:1-2. For a simulated current of 1.05 x $I_{dmN}$, set the $I_d/I_{dmN1}$ potentiometer for a -6 V output signal from A1. Then reconnect jumper link S2:1-2 and balance the output signal to 0 V with the BAL potentiometer.

### 4.4.4 Overload protection

The convertor is normally provided with overload protection of type YXO 124. For convertors with $I_{dmN1} \geqslant 1600$ A the overload protection of type RVAB may be used insted of the YXO 124 and the jumper link 591.S1.13-14 is then inserted.

By means of jumper link S1, the function generator A2 can be set for three different tripping curves; see fig. 4-30.

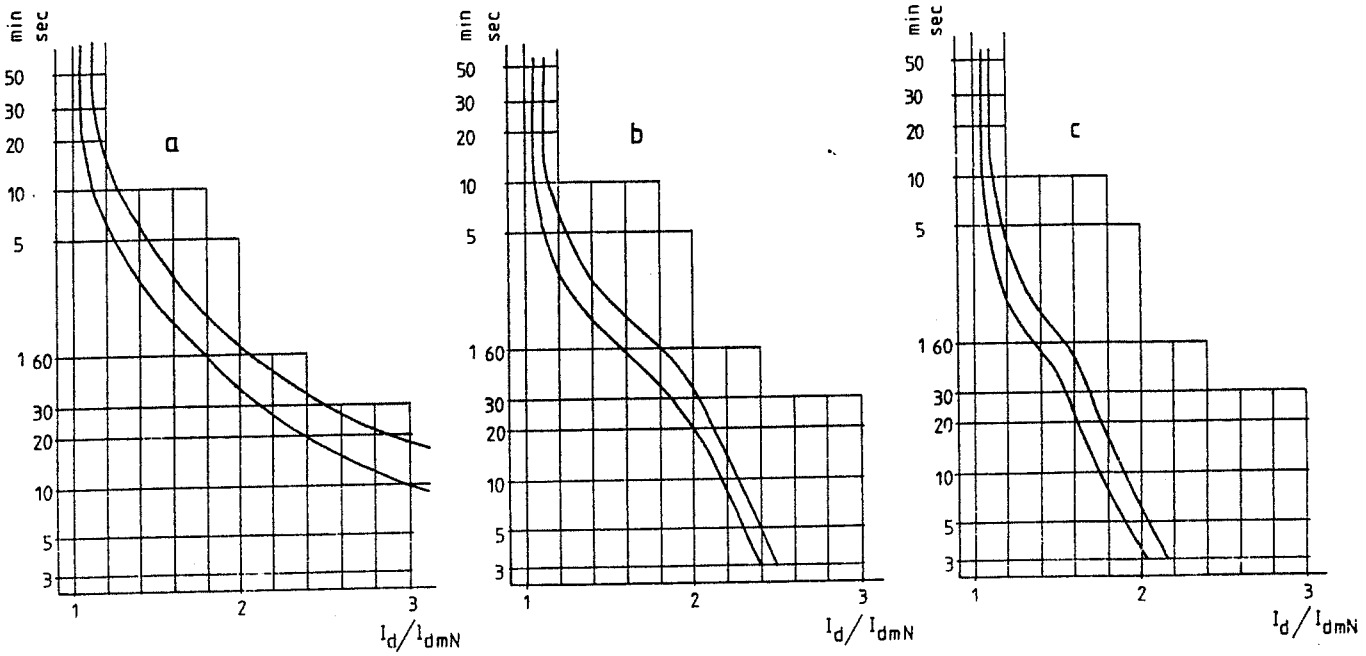


Fig. 4-30

Curve "a" simulates the characteristic of a type LAB d.c. machine at normal running temperature, and can also protect a type LAA machine.

8 Curve "b" simulates the characteristic of a type LAK d.c. machine at normal running temperature in the range $I/I_{dmN} < 2$, and gives a margin to tripping of about 30 s, as shown in curve "a".

Curve "c" gives a margin to tripping $\geq$ 30 s as shown in curve "B".

Jumper link S1 must be conncected as follows:

| | |
|---|---|
| Curve a | S1:1-2 |
| Curve b | S1:3-4 |
| Curbe c | S1:5-6 |

When the actual current exceeds the set rated current, integrator A3 receives a positive input signal and C6 is charged (negatively). R2/C6 simulates the cooling time-constant of the d.c. machine, and in conjunction with the hysteresis of A4, restarting is prevented for a certain time after tripping. With restarting is prevented for a certain time after tripping. With R2 = 10 Mohm there is a delay of about 4 minutes. C6 is discharged with the same time constant, even if the supply voltage is lost, that restarting is prevented for the same time in this case as well. The tripping and indication functions can be checked by connecting X21:3 to 0 V.

4.4.4.2
Overload protection RVAB

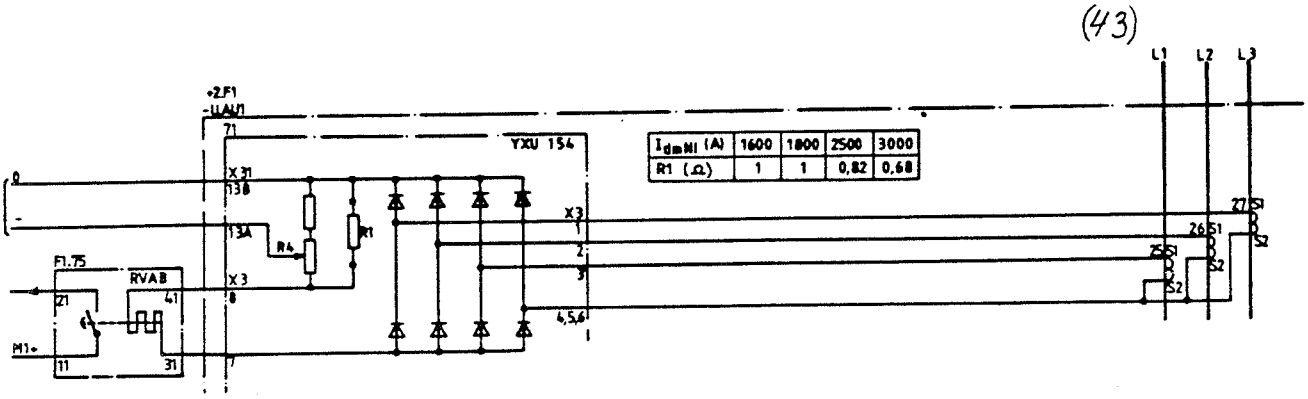


Fig. 4-31

RVAB is used when particularly close agreement is required between the overload curve of the DC machine and the tripping curve of the protection. RVAB is only used in convertors with $I_{dmN1} \geqslant 1600$ A. The ratio between the thyristor bridge D.C. current and the current through RVAB is 1600/1 for $I_{dmN1}$ = 1600 and 1800 A and 2000/1 for $I_{dmN1}$ = 2500 and 3000 A.

Two different current ranges, 0.5 - 1 A and 0.7 - 1.4 A and 4 different time counstants $T_b$ = 8, 15, 25 and 40 minutes.

For further information regarding RVAB, see information document RK 487-300 and catalogue RK 48-1 (RVAA).

4.4.5
DC current monitor

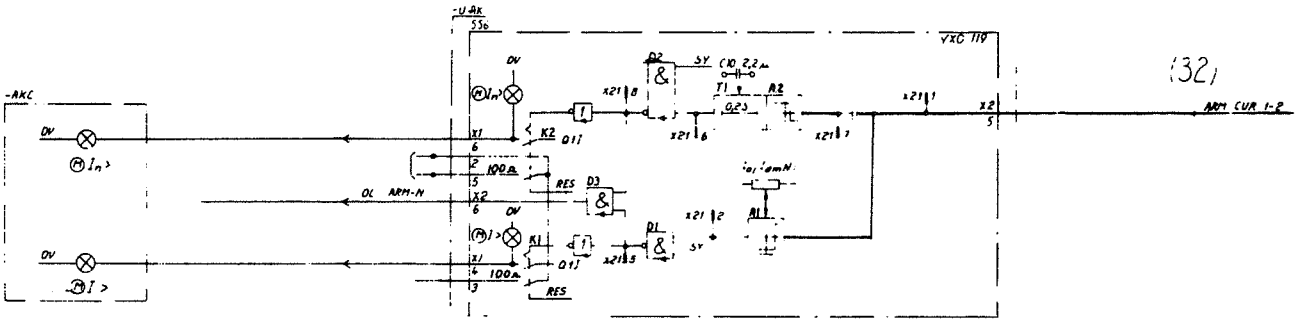


Fig 4-32

The d.c. current monitor YXO 119 trips the convertor for overcurrent (instantaneously), and for abnormal d.c. current pulsations caused by fuse rupture or phase failure, for example

If the actual value of the current ARM CUR 1-2 exceeds the leve set in A1, the output signal of D1 goes to "0", the convertor i tripped via D3, and an indication is given via K1. The setting range for A1 is 0-3 times $I_{dmN1}$ (rated current of thyristor bridge). Normally it is set at the factory for 2.3 times $I_{dmN1}$ A1 is basically designed to detect instantaneous values, and th setting must therefore allow for normal ripple on the direct current.

Pulsations on the direct current are detected in A2, and if the last for more than 0.2 s (T1), D2 gives a "0", the convertor is tripped by D3, then indication goes via K2. Normal ripple ($f \geq 300$ Hz) is filtered out in A2, and does not affect the circuit. Since all fuse ruptures in the main circuit cause pulsations of the direct current, this monitoring replaces conventional fuse rupture indication.

The tripping and indication functions can be checked by connecting X21:5 to 0 V for overcurrent and X21:8 to 0 V for pulsation.

4.4.6
AC voltage monitor

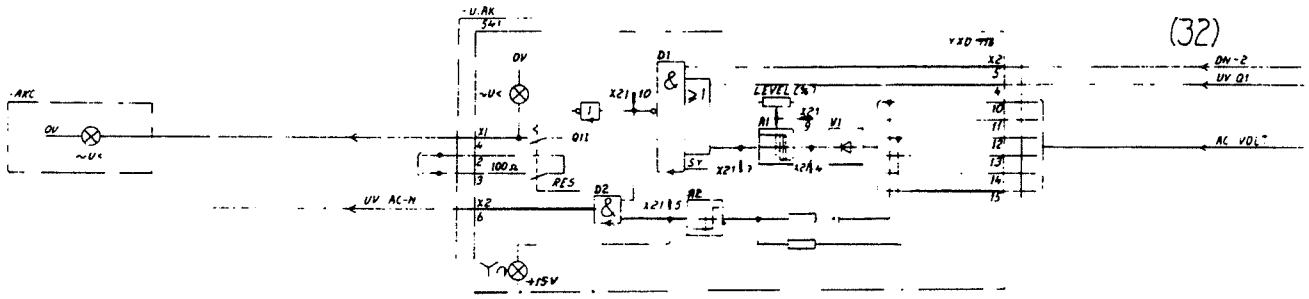


Fig. 4-33

The a.c. voltage monitor, YXO 116, gives tripping for low supply voltage and for incorrect phase sequence.

The same six phases from the supply transformer as are used in the trigger pulse generator are used here for a.c. voltage detection. The voltage is rectified in V1, and the signal then goes to level flipflop A1. A1 includes a timing circuit (2 ms approx) to prevent tripping due to commutation peaks. The indication level of A1 is set in the range 50-110% with the LEVEL potentiometer. A1 also detects single-phase voltage drops.

When the output signal from A1 goes to "1", the convertor is tripped via D1 and D2 if it is on (the signal ON-2). This prevents unwanted tripping when the supply voltage is switched on and off.

The signal UV Q1 also goes to D1 to give an indication. UV Q1 comes from the circuits that monitor Q1+ and Q1- (see Section 4.1.2).

A2 is used to check that the a.c. voltage has been connected with the correct sequence. If the phase sequence is incorrect, the output of A2 goes to "0" and the convertor is tripped via D2. Incorrect phase sequence is indicated only by an LED, without memory relay on YXO 116, since this fault cannot occur while the convertor is running.

The tripping and indication functions can be checked by connecting X21:10 to 0 V for undervoltage and X21:5 to 0 V for incorrect phase sequence. 8

4.4.7
Earth fault monitor

To detect a single earth fault a voltage measuring circuit is necessary which either measures the voltage at the mains zero directly or via a artificial zero. This function is normally located adjacent to the mains transformer.

Larger convertors normally have their own transformers and in such cases it can be practical to locate the earth fault supervision in the convertor cubicle. For convertor with $I_{dmN1} \geqslant 1600$ A, the RAEUB type of voltage measuring earth fault monitor can be used.

In the case of single earth faults, operations can be continued but with double earth faults, the equipment must be tripped. In an extensive installation with many convertors it can therefore be advantageous, if a double earth fault occurs, to obtain an indication of which drive system is thus faulty. For this purpose, the unit YXO 118 can be installed, this measuring the sum of the currents in the three phases.

4.4.7.1
Earth fault monitor (current measuring)

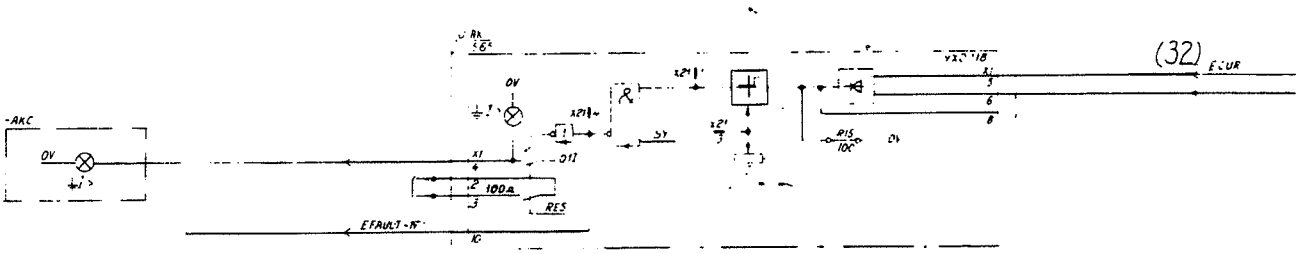


Fig. 4-34

The earth fault monitor, XYO 118, detects the earth current for double earth fault when one of the faults is downstream of the point at which the convertor is connected to the supply. A transformer that measures the sum of the currents of the three phases is used to measure the earth current. The ratio of the transformer is 1:400, and with a 100 ohm ballast resistor, R15, this gives a setting range of 4-12 A. Normally the level is set to 4 A at the factory. When the earth current exceeds the set level, the convertor is tripped via the signal EFAULT-N.

The tripping and indication functions can be checked by connecting X21:4 to 0 V.

8

4.4.7.2
Earth fault monitor (voltage measuring)

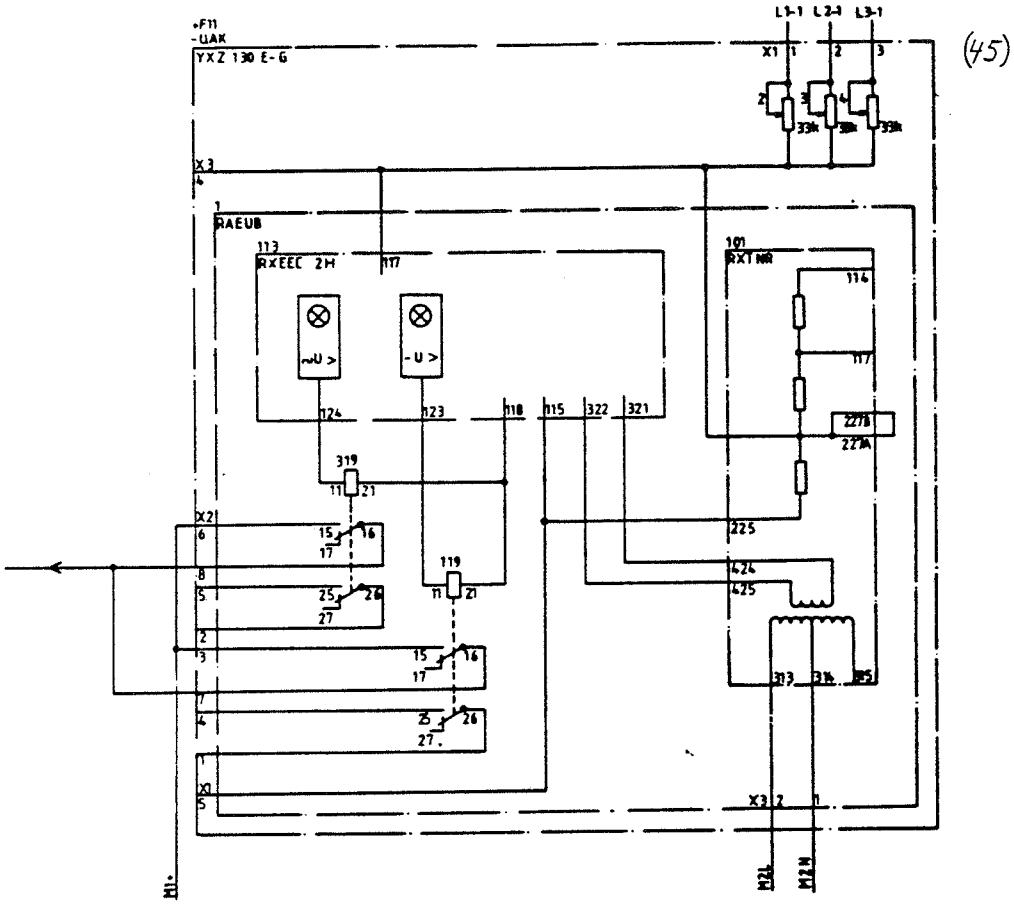


Fig. 4-35

The unit RAEUB measures the mains voltage via a artificial zero. The voltage dividing resistance for this is located on the same apparatus base plate as the RAEUB unit and the designation of the complete earth fault monitor is YXZ 130.

The RAEUB unit detects earth faults on both sides (A.C. or D.C.) of the convertor and indicates the location of the fault by means of leads. The LED concerned illuminates while the fault persists and the voltage is applied.

The indication circuits each operate an auxiliary relay, the contacts of which can be used to trip the convertor or to activate external indicaton only.

The indication level is 33% of a fully developed earth fault on the A.C. side and 16% on the D.C. side.

Settings to the correct mains voltage (performed at the factory) are made with the resistors 2-4 in accordance with the following table

| $U_{vN}$(V) | R(Kohm) |
|---|---|
| 380-430 | 12 |
| 440-540 | 19 |
| 550-650 | 26 |
| 660-860 | 33 |

# 5
# ARMATURE CONVERTOR

## 5.1
## Contactor unit/circuit breaker

A switching device is needed to enable the convertor control equipment to disconnect the d.c. machine from the supply when the convertor is switched off or tripped. It is located on the a.c. side of the thyristor unit so that the thyristor unit is also disconnected from the supply.

Thyristor units YGMK, YHMK must have an external contactor, preferably on the a.c. side, though there is no technical objection to fitting it on the d.c. side.

For contactor units with an equivalent rated d.c. current of up to 60 A, the main contactor (EG 40) is controlled directly by the output relay on YXT 115. For rated currents from 60 to 770 A (for $U_{VN}$ > 500 V up to 600 A) the main contactor is operated by a type EG 10 auxiliary contactor. For the range 77 to 1350 A (for $U_{VN}$ > 500 V up to 1075 A) two EG 630 contactors are used in parallel as main contactors. For higher rated currents, circuit breakers of ALG 2000 type are used.

## 5.2
## Thyristor unit

The thyristor bridge is arranged as a three-phase fully-controlled six-pulse circuit. There are two versions: single convertor (YGMK, YGML) or double convertor (YHMK, YHML)

In the double convertor version (fig. 5-1) the thyristors are connected directly in anti-parallel, and have a common fuse and RC ciruit. Bridge arm fuses are used in all convertor sizes to protect the d.c. circuit as well. In single convertors the RC circuit provides sufficient protection from voltage transients in double convertors there must be phase reactors or branch reactors as described in section 2.1.

5.2.1
Trigger pulse transmission

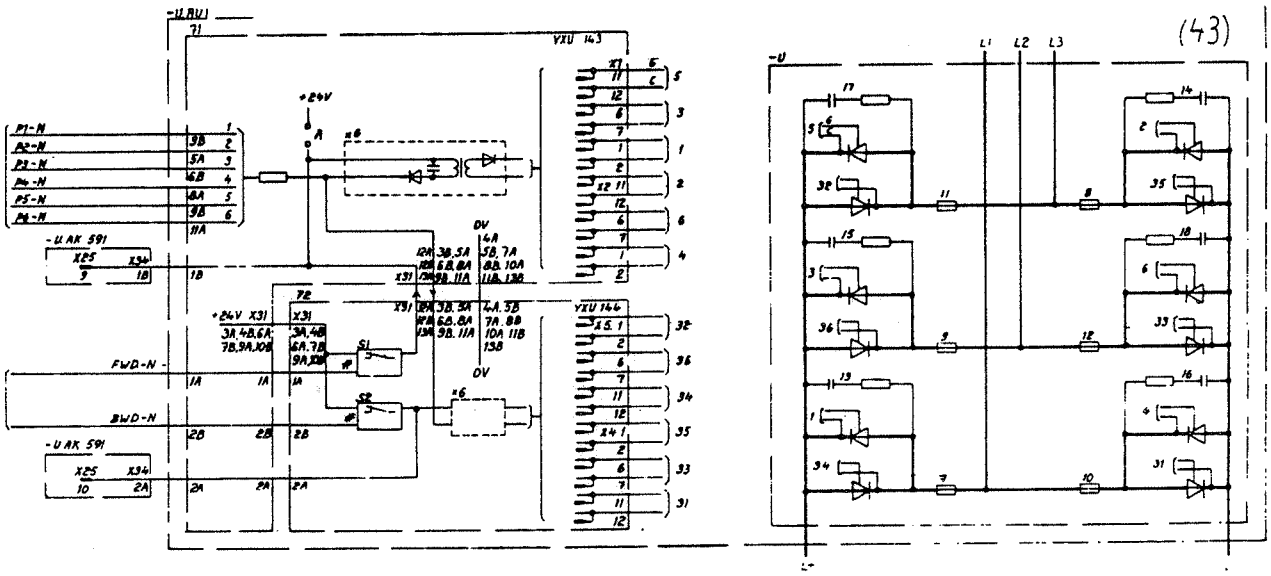


Fig. 5-1

Basically the technique used for trigger pulse transmission is the same whatever the size of the convertor, but the equipment differs in mechanical design. Fig. 5-1 shows the trigger pulse transmission circuits for a double convertor with $I_{dmN1} \geq 400$ A.

The trigger pulses go via a ribbon cable to a pulse transformer unit YXU 143, and from there, after electrical isolation in pulse transformers, to thyristors 1-6. A double convertor also includes thyristors 31-36 and pulse transformer unit YXU 144.

It is not normally necessary to measure the trigger pulses on the secondary side of the transformers, but if this has to be done, the test points (solder tags) shown on fig. 5-1 may be used. Remove the main fuses to make the thyristor bridge safe before doing this measurement.

Oscilloscope traces of the trigger pulses are shown in fig. 5-2. The amplitude may vary 1-4 V from one thyristor to another.

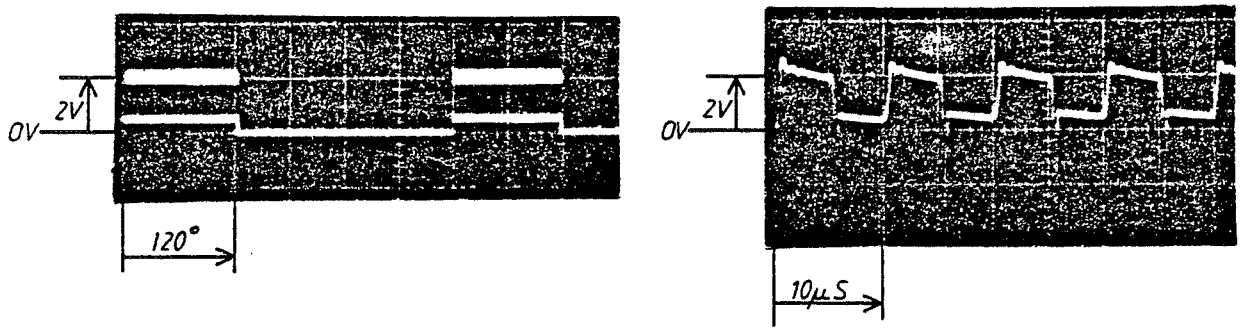


Fig. 5-2

In double convertors the trigger pulses are switched to the forward or reverse bridge depending on whether the +24 V suppl. (Q1P) goes via S1 or S2. In this case strapping A on YXU 143 must be removed. The voltage after S1 or S2 can be checked at test points on YXT 115; X25:9 for forward and X25:10 for reverse.

5.2.2
Current measurement

(43

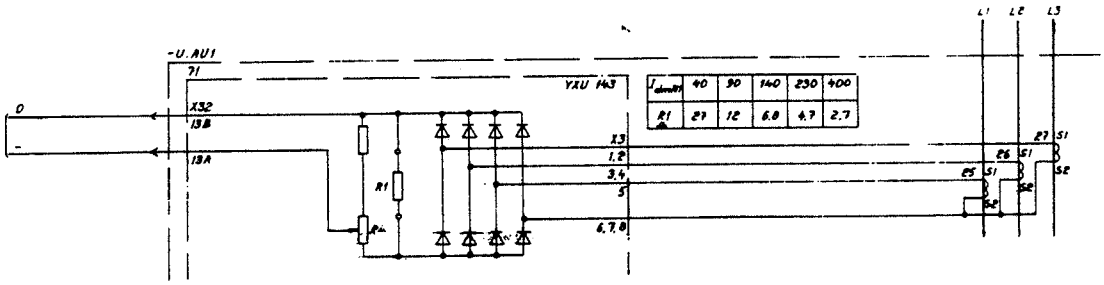


Fig. 5-3

The d.c. current is measured on the a.c. side of the thyristor unit by means of current transformers and a diode bridge. Fig. 5-3 shows the circuit for $I_{dmN1} \leq 400$ A, but the principl is the same for all sizes of convertor.

The value of ballast resistor R1 is chosen to give a voltage of about -1 V for $I_{dmN1}$ (this gives 2.5 V after the buffer amplifier on YXT 115).

The following table shows the ratios of the current transformers.

8

| $I_{dmN1}$ (A) | Ratio |
|---|---|
| ⩽ 400 | 1:1000 |
| 650 - 1400 | 1:2000 |
| 1600 - 1800 | 1:1600 |
| ⩾ 2500 | 1:2000 |

5.2.3
Fan unit

(44)

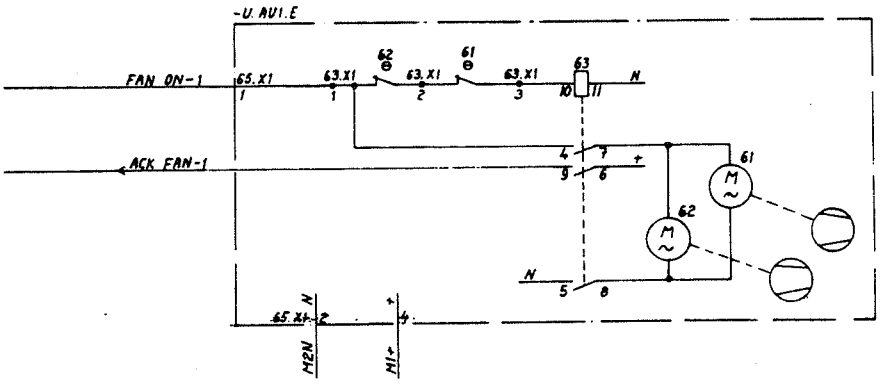


Fig. 5-4

Figure 5-4 shows the fan unit for convertor sizes 230 and 400 A. The fans are supplied directly (M2L: 110/115 V) via the output relay on YXT 115. Relay 63 is used for acknowledgement, and to disconnect the supply on overload, in conjunction with the termally-operated contacts in the fan motors.

For convertors rated at 650-1400 A three-phase fan motors with the same voltage as the convertor supply voltage (up to 500 V) are used. These also have built-in thermally operated contacts.

For the largest convertors, 1600-3000 A, a three phase fan motor is used with the same voltage as that connected to the convertor. The fan motor is switched on with a contactor with a thermal relay.

# 6
# CONNECTION FOR EXTERNAL FIELD EXCITERS

This function consists of fuses and connection terminals to supply and operate field exciters outside the convertor enclosure.

The main circuits of the external field exciters are supplied via a three-phase fuse group with 25 A fuses for 40-400 A armature convertors, 63 A fuses for 650-1400 A, and 125 A fuse for 1600-3000 A armature convertors. Connections are made directly to the fuseholder.
Other auxiliary supply voltages and operating signals are grouped at terminal block B40.X11 as shown in fig. 6-1.
Auxiliary supplies and the main contactor operating circuit ar always connected in the same way, but the signals > MIN FLD CU and OC FLD-N are connected differently, depending on the type internal field exciter used. The technical description of the relevant field exciter type states the correct connection arrangements. Fig. 6-1 shows the circuit when the convertor i supplied without internal field exciter. Check that M1, M2 an Q1 are not overloaded.

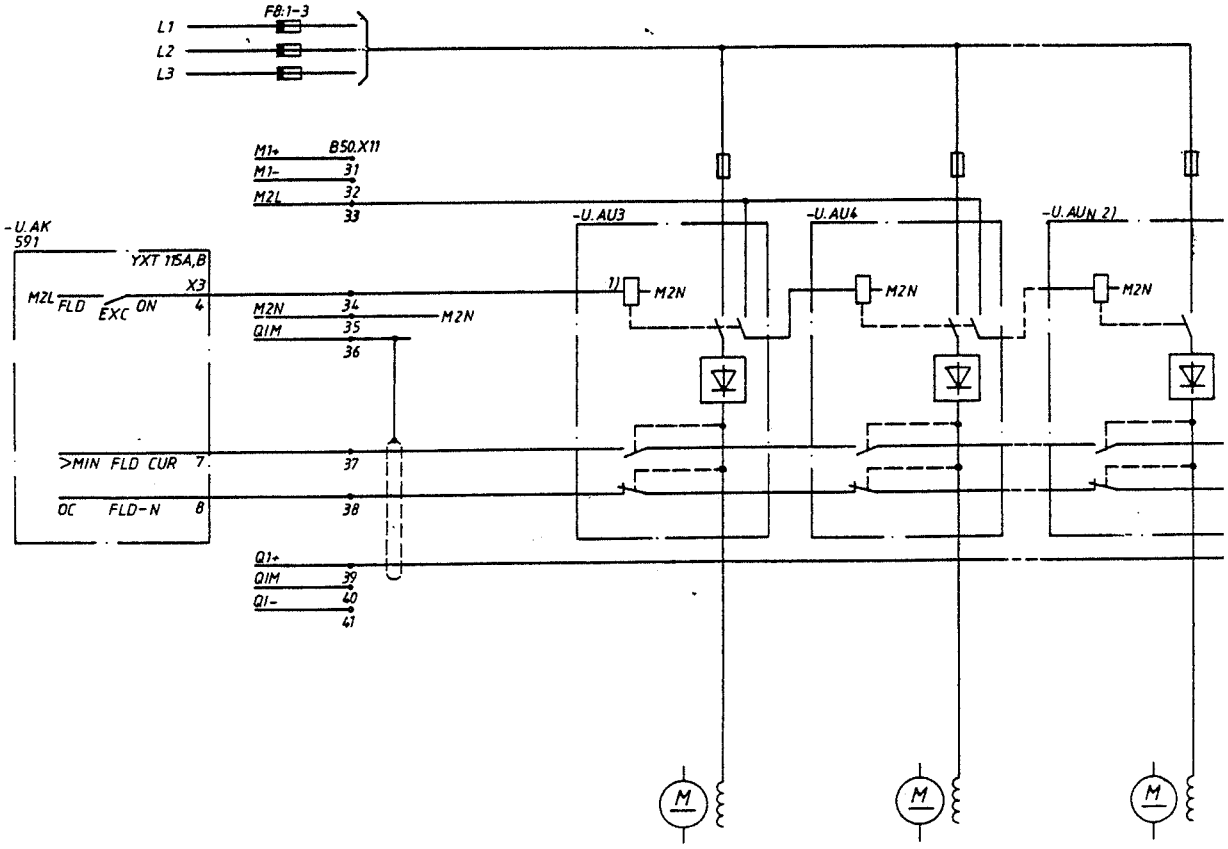


Fig. 6-1

1) Power consumption of contactor coil in -U.AU3 $\leq$ 10 VA
2) Max ten external field exciters type YBLH, YBLJ, YFBE or YFHE.

## 7
## DC VOLTAGE MEASURING UNIT

The unit is made up of the sub-functions d.c. voltage transducer YXC 110 and/or armature overvoltage protection YXO 126.

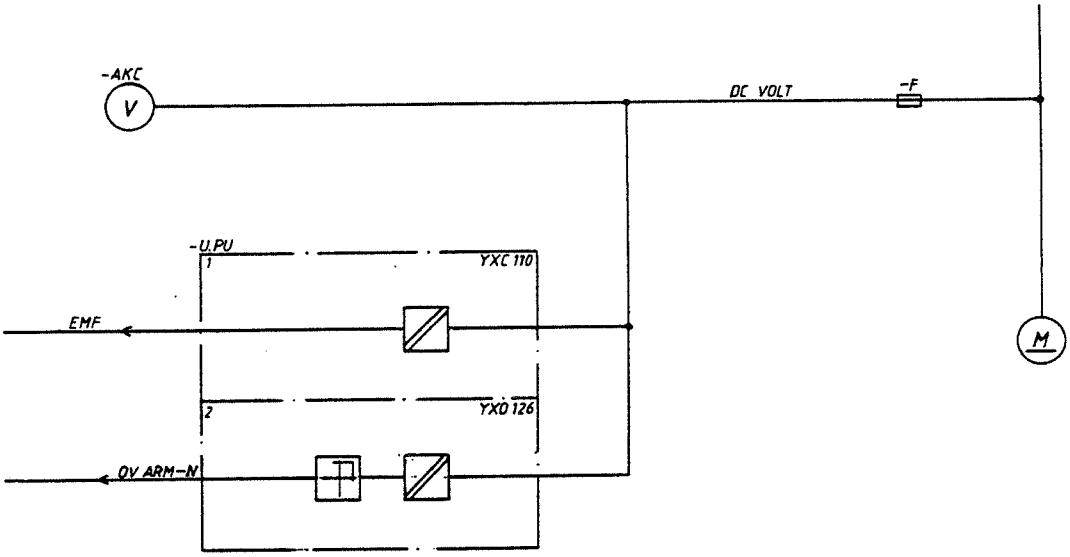


Fig. 7-1

In an enclosed convertor the measuring unit is connected to the d.c. terminals of the convertor via fuses. The function levels can be adjusted while the convertor is running, since the "high voltage side" of the unit is screened to prevent accidental contact, and the potentiometers have insulated spindles.

The d.c. voltage transducer and the armature overvoltage protection circuit can be used separately or together. They are connected to the armature convertor via a common ribbon cable.

### 7.1
### DC voltage transducer

The d.c. voltage transducer delivers an output voltage proportional to the armature voltage U or the induced voltage E. The output signal is isolated from the input signal. The unit is used in armature voltage control to replace the tachogenerator of the machine. The output signal is then used as a speed actual value signal when the flux ø of the machine is kept constant. The unit is also used in conjunction with a controlled field exciter for field weakening at constant emf.

7.1.1
Armature voltage measurement

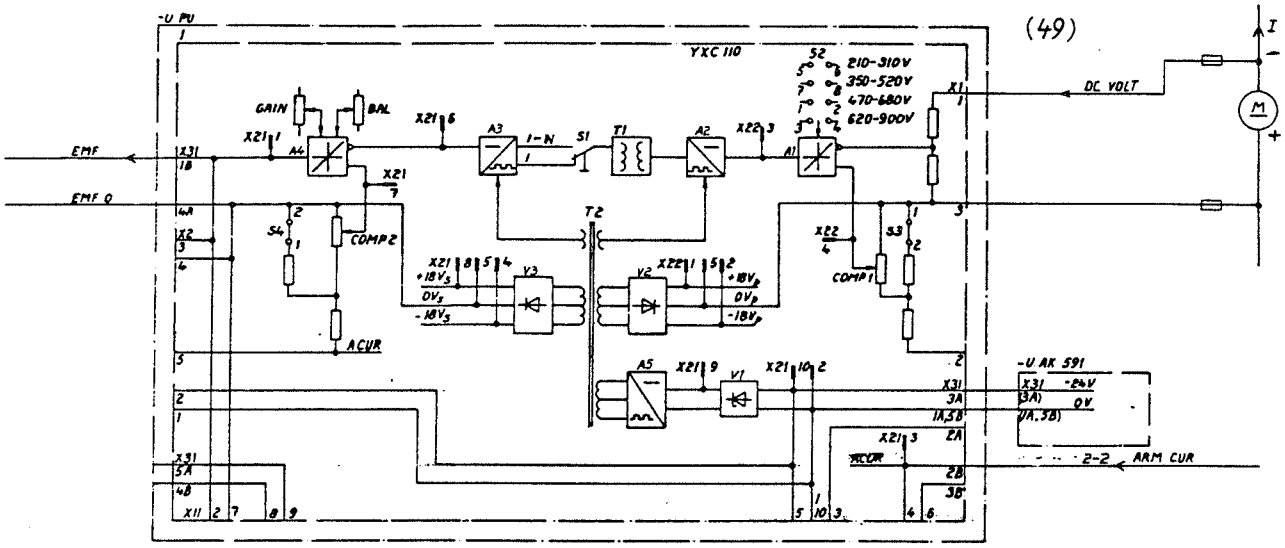


Fig. 7-2

The armature voltage DC VOLT of the machine is connected via fuses to terminals X1.1 and X1.3. After passing through a voltage divider, the signal goes to amplifier A1. Jumper links S2 are used to select the correct gain of A1, depending on the value of DC VOLT.

The output signal of A1 is modulated in A2 to give a pulse tra with a frequency of 65 kHz. The pulses pass through transform T1, and the signal is demodulated in A3 to restore the origina signal. The GAIN potentiometer and gain jumper link group S2 are used to set the gain to give an output signal EMF of 10 V for input signals DC VOLT in the range 210-900 V.

| Jumper link S2 | Gain from X1.1 to X22.3 | from X22.3 to X21.6 | from X21.6 to X21.1 |
|---|---|---|---|
| 3-4 | $-1.06 \times 10^{-3}$ | 1.93 | -(5.12-15.20) |
| 1-2 | $-1.39 \times 10^{-3}$ | " | " |
| 7-8 | $-1.89 \times 10^{-3}$ | " | " |
| 5-6 | $-3.06 \times 10^{-3}$ | " | " |

8

Switch S1 is used to change the polarity of the output signal. Normally it must be set to 1 (not inverted) since the EMF actua value signal must be negative for positive rotor voltage DC VOLT.

The d.c. voltage transducer is supplied with 24 V (19-29 V, 180 mA approx) via a ribbon cable (X31.1 A, 5B-X31.3 A) or a screw terminal block (X2:1-X2:2). The supply voltage is stabilised at 10.3 V in V1. Oscillator A5 transmits the supply voltage via transformer T2, and the voltage is then rectified and filtered to ±18 Vp in V2, or ±18 V in V3. In this way the input signal supply and the output signal supply are isolated. Windings on T2 also control modulator A2 and demodulator A3.

Performance

Typical static error for the following disturbances:

| | |
|---|---|
| Supply voltage 5% | 0.005% |
| Ambient temperature 5 °C | 0.15% |
| Zero error | can be balanced with the BAL pot |
| Linearity | 0.15% |

7.1.2
EMF measurement

There are three ways of compensating for voltage drop when the induced voltage E of the d.c. machine is to be measured:

1. Compensation of the static voltage drop by means of the current actual value
2. Compensation of the static or dynamic voltage drop via the AB terminals of the d.c. machine
3. Compensation of both static and dynamic voltage drops.

The following equations apply to a d.c. machine:

$$E = K \times \phi \times n$$

$$U = E + I(R_r + R_k) + \frac{dI}{dt}(L_r + L_k)$$

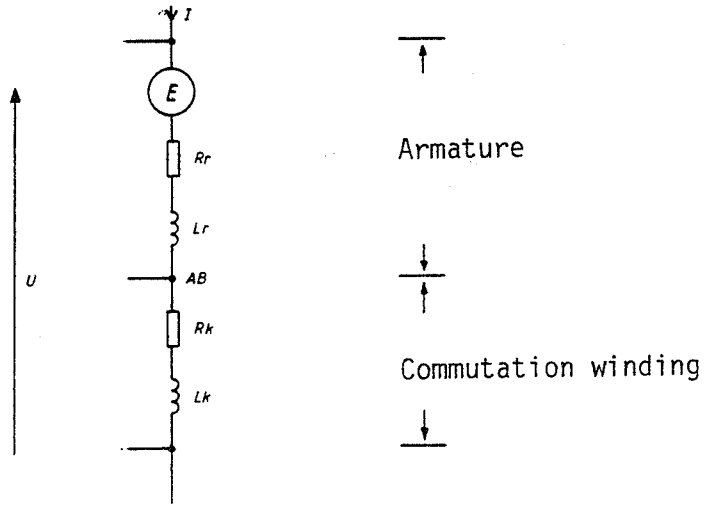


Fig. 7-3

7.1.2.1
Compensating for static voltage drop via current actual value

Disregarding the dynamic term in the equation in fig. 7-3, we obtain:

$$E = U - I \times R$$

The actual value of the armature current ARM CUR 2-2 is connected to differential amplifier A4.

A compensation equivalent to I x R can be obtained by appropriate adjustment of the potentiometer COMP2. The compensation range can be increased by a factor of 3 by removir jumper link S4:1-2.

The gain between X2.5 and X21.1 can be varied by means of the GAIN potentiometer (COMP2 at max) over the range 0.21 - 0.63 when jumper link S4: 1-2 is fitted and 0.63 - 1.87 when the jumper link is not fitted.

Since ARM CUR 2-2 has the correct sign, the compensation also has the correct sign.

The compensation does not take account of changes in the resistance of the rotor circuit due to changes in temperature.

7.1.2.2
Compensation of the static or dynamic voltage drop via the AB terminals of the d.c. machine.

(49)

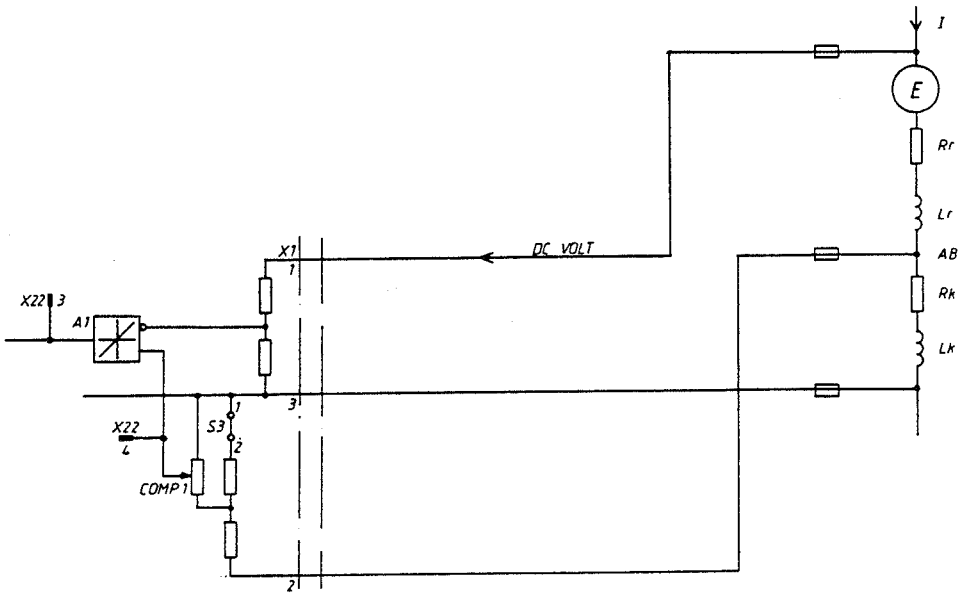


Fig. 7.4

The voltage from the AB terminal of the d.c. machine (k terminal) is connected via a fuse to X1.2.

| Input | Input signal | Gain from input to X22.3 |
|---|---|---|
| X1.1 | $E + I\ (R_r + R_k) + \frac{dI}{dt}(L_r + L_k)$ | $-k_1$ |
| X1.2 | $I\ R_k + \frac{dI}{dt} L_k$ | $k_2$ |

The output signal from A1 will be:

$$U_{X22.3} = -K_1 \left[E + I(R_r + R_k) + \frac{dI}{dt}(L_r + L_k)\right] + k_2 \left(I\ R_k + \frac{dI}{dt} L_k\right)$$

The gain $k_2$ can be varied with potentiometer COMP1 and jumper link S3:1-2.

| Jumper S3:1-2 link | Gain ratio $k_2/k_1$ |
|---|---|
| fitted | 0 - 4 |
| not fitted | 0 - 12 |

The static voltage drop will be zero if the gain $k_2$ is set so that $k_1\ I\ (R_r + R_k) = k_2\ I \times R_k$ i.e.

$$\frac{k_2}{k_1} = \frac{R_r + R_k}{R_k}$$

The compensation is not affected by temperature changes (resistance changes) in the armature circuit, since both the armature windings ($R_r$) and the compensation windings ($R_k$) follc the temperature changes.

In normal d.c. machines the dynamic voltage drop is over-compensated when the static voltage drop is compensated to zerc

The dynamic voltage drop will be zero if the gain $k_2$ is set so that

$$k_1 \frac{dI}{dt} (L_r + L_k) = k_2 \frac{dI}{dt} L_k \text{ i.e.}$$

$$\frac{k_2}{k_1} = \frac{L_r + L_k}{L_k}$$

For normal d.c. machines the static voltage drop will be under-compensated when the dynamic voltage drop is compensated to zero.

7.1.2.3
Compensation of both static and dynamic voltage drops

The dynamic voltage drop is compensated via the AB terminal of the d.c. machine as described in 7.1.2.2. This also compensat for a small part of the static voltage drop. The rest of the static voltage drop is compensated by means of the current actual value, as described in 7.1.2.1.

## 7.2
## Armature overvoltage protection

The unit for armature overvoltage protection, YXO 126, trips the convertor for armature overvoltage, or if the signal DC VOLT disappears.

### 7.2.1
### Overvoltage

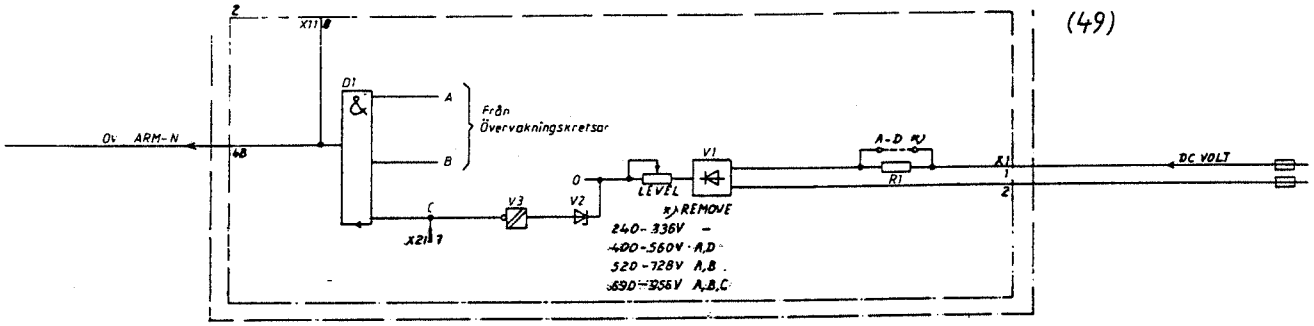


Fig. 7-5

The armature voltage DC VOLT is connected via fuses to terminals X1.1 and X1.2. The voltage division between R1 and the LEVEL potentiometer is selected by means of strapping A-D. The setting range for LEVEL is 1-1.4 times the lowest value of the selected voltage range. The voltage for LEVEL is rectified in diode bridge V1.

When the armature voltage DC VOLT exceeds the level set with LEVEL. The voltage across LEVEL becomes sufficiently high to cause regulating diode V2 to conduct, so that the signal after optocoupler V3 becomes "0", and the convertor is tripped via D1. The signals A and B to D1 come from the monitoring circuits, and are normally "1".

7.2.2
Monitoring circuits

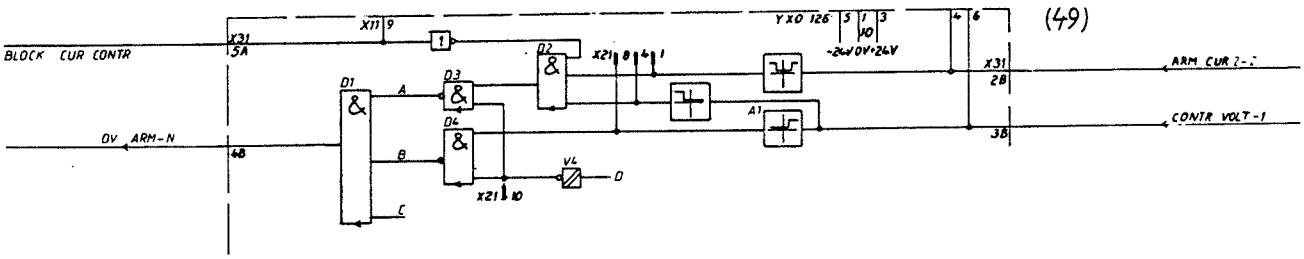


Fig. 7-6

The output signal OV ARM-N goes to "0", and the convertor trip if any of the signals A, B, C go to "0".

A. If the control signal CONTR VOLT is negative (< -4.5 V), the absolute value of the armature current ARM CUR 2-2 is > 0.5 and if the signal BLOCK CUR CONTR is "0", the outpu signal from D2 will be "1". If the rotor voltage DC VOLT then disappears, D goes to "0", causing the voltage after optocoupler V4 to go to "1", so that A goes to "0".

B. If the control signal CONTR VOLT is positive (> +1 V) the output signal from A1 is "1". If the armature voltage DC VOLT disappears under these conditions, D goes to "0", th voltage after optocoupler V4 goes to "1", and B goes to "0".

C. When the armature voltage DC VOLT exceeds the tripping level set with the LEVEL potentiometer, C goes to "0".

If the convertor is fitted with the armature voltmeter accessory, the voltmeter is connected to DC VOLT via the same fuses as the overvoltage protection unit.

8
CONTROL UNIT EXTERNAL FANS

The unit is intended to supply and operate external motors in cooling fans, heat exchanges etc.

40-400 A convertors can supply two external motors with a max rated current of 9.3 A. Convertors with current ratings 650-3000 A can supply three external motors.

The current setting ranges are selected from the table.

There are three versions of the unit:

Standard version

For one, two or three motors, each with a rated current of not more than 6 A and a supply voltage of not more than 500 V. All motors are switched on simultaneously. If a fault occurs, the convertor is tripped instantaneously.

Advanced version

For two or three motors with max 18 A rated current (max 9.3 A for 575-660 V supply voltage). Motors two and three can be thermostatically-controlled if necessary. If a fault occurs, the convertor is tripped instantaneously.

Advanced version with delayed trip signal

This operates in the same way as the advanced version described above, but if a fault develops on motor number two or three, the convertor is tripped after a delay which can be set between 10 and 180 s. The signal "Tripping follows" is given instantaneously when a fault occurs. This version may be used with delicate processes to enable action to be taken before the process is shut down.

Current setting ranges

| | |
|---|---|
| 0.30 - 0-48 A | 2.40 - 3.80 A |
| 0.47 - 0.75 A | 3.80 - 6.00 A |
| 0.72 - 1.14 A | 6.00 - 9.30 A |
| 1.07 - 1.70 A | 8.90 - 13.50 A |
| 1.58 - 2.50 A | 13.20 - 18.00 A |

# 9
# GLOSSARY OF SIGNAL DESIGNATIONS

| English | Swedish | German | French | Signal |
|---|---|---|---|---|
| AC VOLT | VSP | WSP | TENS CA | AC voltage |
| ACK DSCH FLD | KV URL FLT | RÜCKM ENTL FELD | AC DECH EXC | Acknowledgement field discharge |
| ACK FAN | KV FLÄKT | RÜCKM LUFT | AC VENT | Acknowledgement fan(s) on |
| ACK MCONT | KV HK | RÜCKM HSCHÜTZ | AC CONT PRINC | Acknowledgement main contactor on |
| ARM CUR | ROT STR | ANK STR | COUR ROT | Armature current, actual value |
| ARM CUR > 0 | ROT STR > 0 | ANK STR > 0 | COUR ROT > 0 | Armature current greater than 0 |
| ARM CUR REV | STR VÄNDN ROT | ANK STR UMKEHR | COUR ROT AR | Armature current reversal |
| AUTO | AUTO | AUTO | AUTO | Automatic |
| BL | BLOCK | BLOCK | BLOC | Blocking |
| CONTR VOLT | STYRSP | STEUERSP | TENS COM | Control voltage |
| CUR REF | STR LEDV | STR SOLLW | REF COUR | Current reference |
| CUR REF FLD | STR LEDV FLT | FELD STR SOLLW | REF COUR EXC | Field current reference |
| CUR REV | STR VÄNDN | STR UMKEHR | COUR AR | Current reversal |
| BLOCK CUR CONTR | NEDST STR REG | BLOCK STR REGL | BLOC REG COUR | Blocking, current controller |
| DC VOLT | LSP | GLEICHSP | TENS CC | DC voltage |
| DSCH FLD | URL FLT | ENTL FELD | DECH EXC | Discharge field |
| ECUR | JORDSTR | ERD STR | COUR T. | Earth current |
| EFAULT | JORDF | ERDSCHL | DEF T | Earth fault |
| EMF | EMK | EMK | FEM | Electromotive force |
| EXT | EXT | EXT | EXT | External fault signal |
| FAN ON | FLÄKT TILL | LÜFTER EIN | VEN EN | Fan on |
| FAST STOP | SNABBSTOPP | SCHN HALT | ARR RAP | Fast stop |
| FLD CUR | FLT STR | FELD STR | COUR EXC | Field current, actual value |
| FLD CUR LIM | FLT STR BEGR | FELD STR BEGR | LIM COUR EXC | Field current limiting |
| FLD CUR REV | STR VÄNDN FÄLT | FELD STR UMKEHR | COUR EXC AR | Field current reversal |
| FLUX REF | LEDV FLÖDE | FLUSS SOLLW | REF FLUX | Flux reference |
| FLD EXC ON | FM TILL | FELDVERS EIN | EXC EN | Field exciter on |
| FWD CUR | STR RIKTN FRAM | STR VORW | COUR AV | Forward current |
| FWD CUR FLD | STR RIKTN FRAM FLT | STR VORW FELD | COUR EXC AV | Forward current, field |
| GAIN ADAPT | FÖRST ANP | VERST ANPASS | ADAPT GAIN | Gain adaptation |
| INCH/CRAWL | R/K | VORR/KRIECH | A COUP/ LENT | Inch/crawl |
| IND ON | IND TILL | ANZ EIN | SIG MARC | Indication, on |
| IND RES | ÅTERST IND | RÜCKST ANZ | SIG REAR | Indication, reset |
| IND TRPD | IND UTL | ANZ AUSL | SIG DECL | Indication, tripping |
| INTLK TRP RES | FÖRR DEBL | VERR RÜCKST AUSL | VERROUILLAGE | Interlock trip reset |
| MCONT OFF | HK FRÅN | HSCHÜTZ AUS | CONT PRINC HORS | Main contactor off |
| MCONT ON | HK TILL | HSCÜTZ EIN | CONT PRINC EN | Main contactor on |
| >MIN FLD CUR | >MIN FLT STR | >MIN FELD STR | >MIN COUR EXC | Field current above min level |
| 8 $n > n_0$ | $n > n_0$ | $n > n_0$ | $n > n_0$ | Speed above min level |
| NEG LIM | NEG GR | NEG GR | LIM NEG | Negative limit |
| OC FLD | ÖSTR FLT | ÜSTR FELD | SURCO EXC | Overcurrent field |

| English | Swedish | German | French | Signal |
|---|---|---|---|---|
| OFF | FRÅN | AUS | HORS | Off |
| OL ARM | ÖL ROT | ÜL ANKER | SURCH ROT | Overload armature |
| OL FAN | ÖL FLÄKT | ÜL LÜFTER | SURCH VENT | Overload fan |
| ON | TILL | EIN | MARC | On |
| OV ARM | ÖSP ROT | ÜSP ANK | TENS ROT > | Overvoltage armature |
| PHR | NEDST | REGL SPERRE | RET DE PH | Phase retardation |
| SP | HAST | DRZ | VIT | Speed |
| POS LIM | POS GR | POS GR | LIM POS | Positive limit |
| RDY F REF | REF BER | BER F SOLLW | REF PRET | Ready for reference |
| REL EMF CONTR | UPPST EMK REG | FREIG EMK REGL | DEBLOC REG FEM | Release, emf controller |
| REL CUR CONTR | UPPST STR REG | FREIG STR REGL | DEBLOC REG COUR | Release, current controller |
| REL FLD CUR CONTR | UPPST FLT STR REF | FREIG FELD STR REGL | DEBLOC REG COUR EXC | Release, field current controller |
| SP REF | HAST LEDV | DRZ SOLLW | REF VIT | Speed reference |
| START | START | START | DEM | Start |
| SUM CUR REF | SUM STR LEDV | SUM STR SOLLW | SOM REF COUR | Sum current reference |
| SY | MATN TILL | VERS EIN | ALIM EN | Supply voltage on |
| TRIP | UTL | AUSL | DECL | Trip |
| TRP RES | DEBL | RÜCKST AUSL | DEBLOC | Trip reset |
| TNSN | DRAG | ZUG | TENS | Tension |
| RUN | DRIFT | BETR | MARC | Running |
| RDY F RUN | DRIFTBER | BER F BETR | PRET MARC | Ready for running |
| UV AC | USP VSP | ÜSP WSP | ST CA | Undervoltage, a.c. |
| UV Q1 | USP Q1 | ÜSP Q1 | ST Q1 | Undervoltage, Q1 (±24 V) |
| VOLT ADAPT | SP ANP | SP ANPASS | ADAPT TENS | Voltage adaptation |

# TYRAK® 8A DC DRIVE SYSTEM

## Diode field exciters type YBLH, YBLJ

## Adjustable field exciters type YFBE, YFHE

Contents | Page



8

1
UNREGULATED FIELD CURRENT, DIODE FIELD EXCITER

The current varies with the supply voltage and is also affected by the resistance of the field winding. This means that the field current can reach as much as 150% of rated field current when the field winding is cold and when $U_{VN}$ is 10% above nominal. As the field winding warms up and its resistance increases, the field current drops as shown in fig 1-1. The field exciter is designed to cope with this overcurrent during the warming-up period.

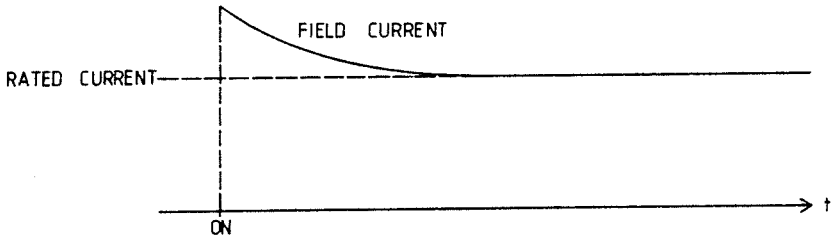


Fig 1-1

There are two types of diode field exciter: type YBLH for single-phase supply, and YBLJ for three-phase supply; see figs 1-2 and 1-3 respectively.

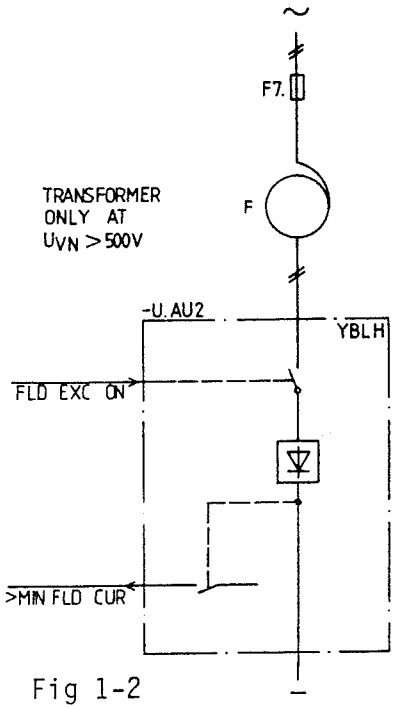


Fig 1-2

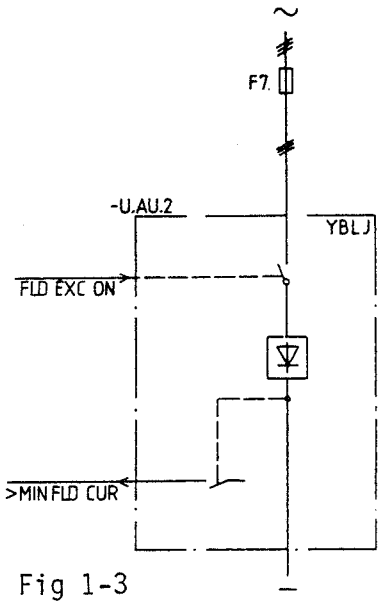


Fig 1-3

8

1.1
Connection to a.c. supply

When the supply voltage $U_{VN}$ is above 500 V, single-phase diode field exciters type YBLH are connected via an autotransformer; see fig 1-4. The field voltage can be varied by altering the transformer connections.

Three-phase diode field exciters type YBLJ are meant for a supply voltage $U_{VN} \leq 500$ V; see fig 1-5.

(54)

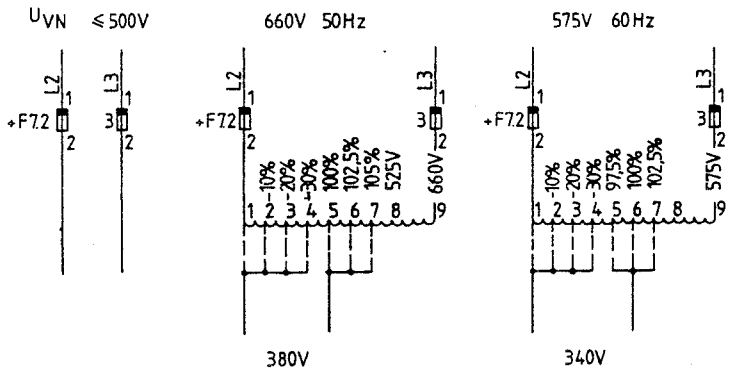


Fig 1-4

(54)

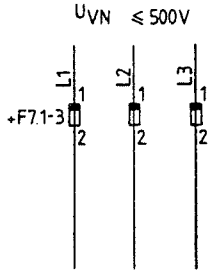


Fig 1-5

1.2
Main contactor

(54)

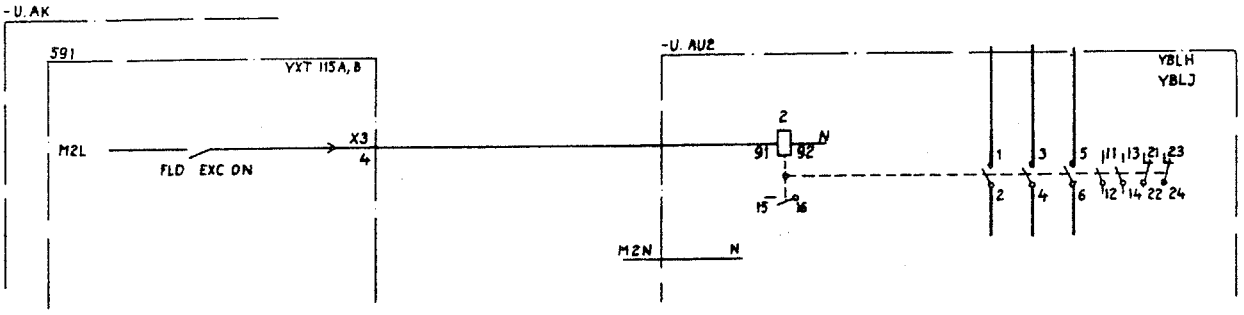


Fig 1-6

The order FLD EXC ON comes from the common sequential control circuits on YXT 115A, B in the armature convertor. Auxiliary voltage M2 is nominally 110 V, 50 Hz or 115 V, 60 Hz. The power consumption of the contactor coil is 10 VA, 3 W.

The connection of external field exciters is described in Section 6 of YT 280-103 E.

1.3
Main circuit

The main circuit is made up of diodes, R-C circuits, minimum current relay and terminal block, and is mounted on a printed circuit board.

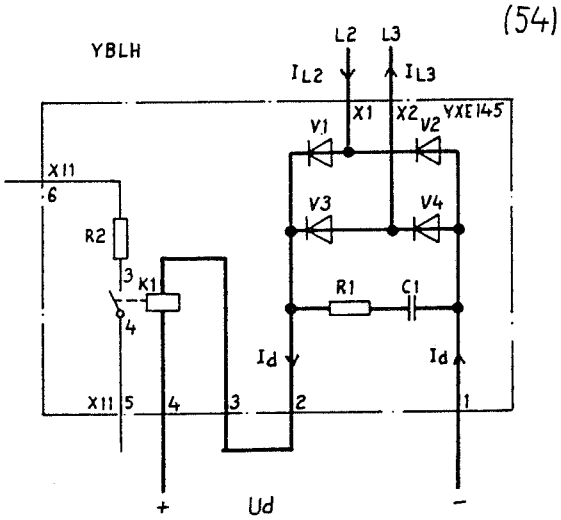


2-pulse 2-way diode bridge

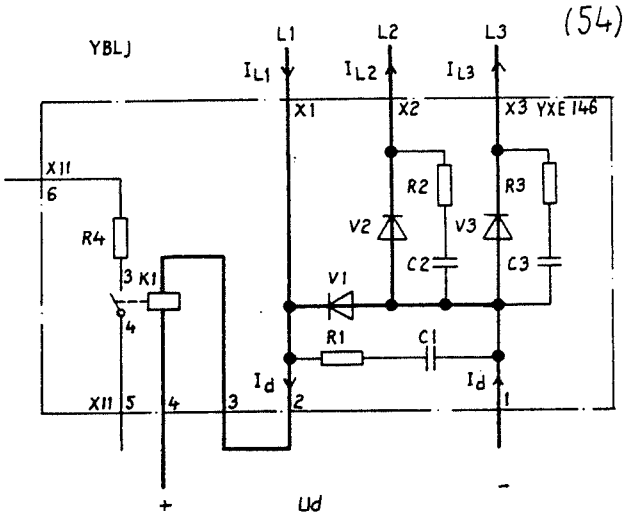


2-pulse 1-way diode bridge with freewheeling diode (V1)

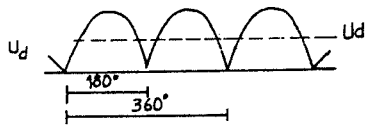


$U_d = 0.9 \times U_{vN}$

$I_{L2} = I_{L3} = I_d$

Fig 1-7 YBLH

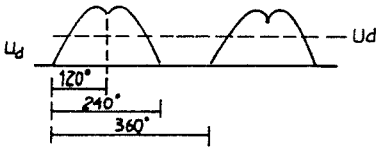


$U_d = 0.675 \times U_{vN}$

$I_{L1} = \sqrt{\frac{2}{3}} \times I_d$

$I_{L2} = I_{L3} = \sqrt{\frac{1}{3}} \times I_d$

Fig 1-8 YBLJ

1.4
Minimum field current monitor

Minimum current relay K1 is a dry-reed relay; the field current flows through its coil. The operating values of the relay are fixed relative to the field exciter rated current $I_{dmN2}$; see table below.

| Rated current (A) | Pick-up value (A) | Drop-out value (A) |
|---|---|---|
| 1 | 0.13-0.19 | > 0.08 |
| 2 | 0.32-0.47 | > 0.2 |
| 5 | 0.65-0.95 | > 0.4 |
| 10 | 1.3-1.9 | > 0.8 |

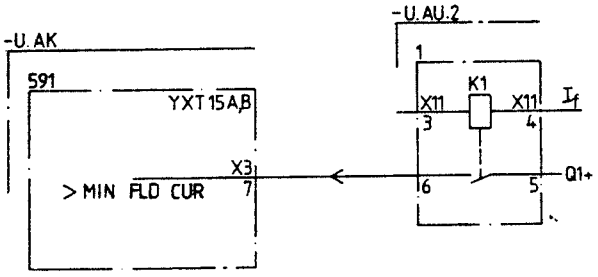


Fig 1-9

Minimum current relay K1 gives a signal to the sequential control equipment when the field current is > MIN FLD CUR. On field current reversal the minimum current relay acknowledge via the field current reversal logic. See Section 3.
The relay contact is designed for mac 60 V/75 mA resistive load. There is a 22 ohm resistor in series with the contact. If a connection for an external field exciter has been ordered, the external minimum field current acknowledgement signal is connected in series with the internal signal. See also Section 6 of YT 280-103 E.

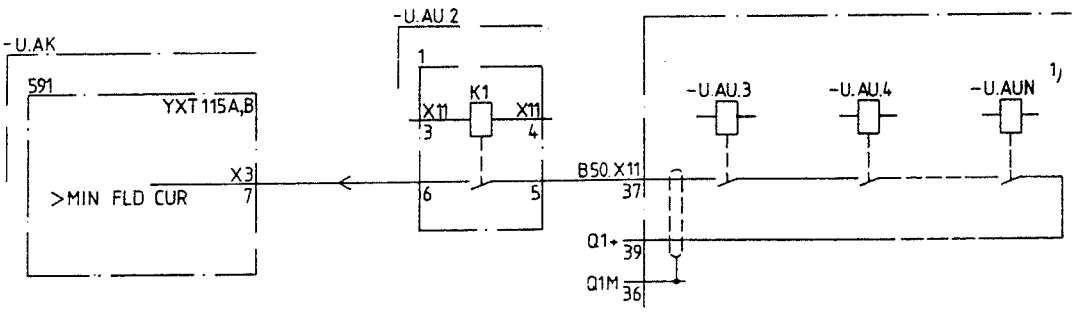


1) Max ten external field exciters type YBLH, YBLJ, YFBE or YFHE

Fig 1-10

## 2
## ADJUSTABLE FIELD CURRENT

There are two types of adjustable field exciter:
YFBE 1-pulse 1-way, 1-phase supply, 220-500 V a.c.
YFHE 2-pulse 1-way, 3-phase supply, 220-500 V a.c.

The current is kept constant by the current regulating circuit, which obtains its reference from a built-in potentiometer $I_f$; the actual value signal is taken from a current shunt. As the electronics are metallically connected to the main circuit, potentiometer $I_f$ has an insulating spindle.

Adjustable overcurrent protection and fixed minimum current protection are provided. A field current reference unit YXZ 142 is available as an accessory. This gives metallic isolation between the external reference signal and the main circuit.

Apart from the contactor and transformer, the entire adjustable field exciter is mounted on one printed circuit board.

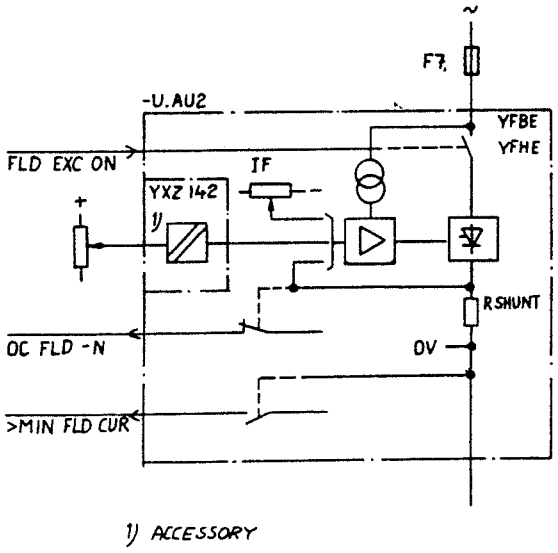


Fig 2-1

2.1
A.c. supply connection and main contactor

The field exciter is connected via fuses to the supply, max 500 V a.c. The 1-way connection gives rise to a d.c. component in the supply system. If several field exciters are connected to the same supply, they can be shared between the phases in such a way as to balance the direct current in the phases. When doing this, it is important to ensure that YFHE is connected with positive phase sequence.

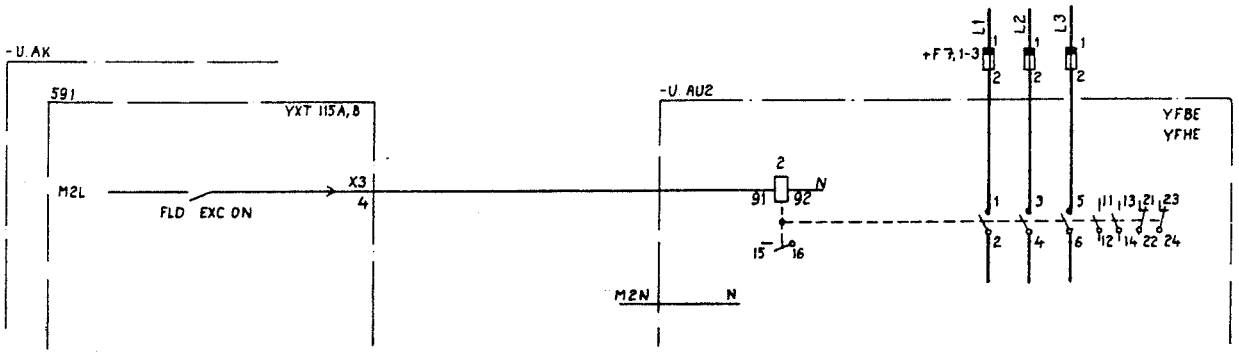


(54)

Fig 2-2

The order FLD EXC ON comes from the common sequential control circuits on YXT 115A, B in the armature convertor. Auxiliary voltage M2 is nominally 110 V, 50 Hz or 115 V, 60 Hz. The power consumption of the contactor coil is 10 VA, 3 W.

The connection of external field exciters is described in Section 6 of YT 280-103 E.

## 2.2 Main circuit

The main circuit is made up to thyristors (V21, V22), free-wheeling diode (V23), R-C protection, phase inductors (L1, L2), current feed back shunt ($R_{shunt}$) and minimum current relay (K1)

(54)

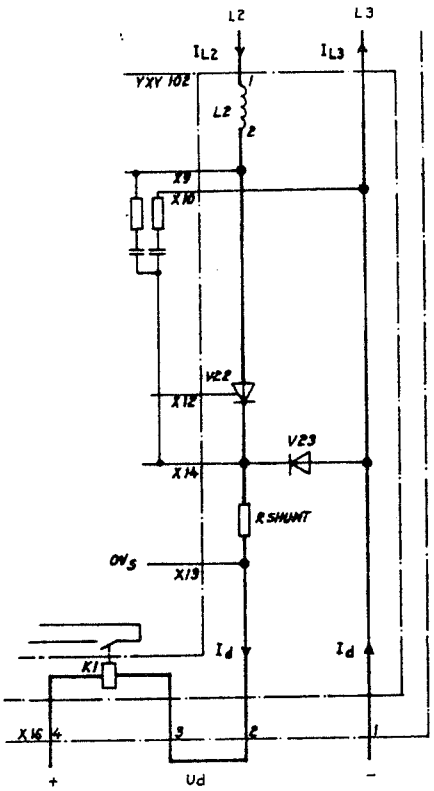


$U_{dmax} = 0.45 \times U_{vN}$

$I_{L2max} = I_{L3max} = \sqrt{\frac{1}{2}} \times I_d$

Fig 2-3 Type YFBE, 1-pulse 1-way with free-wheeling diode

(54)

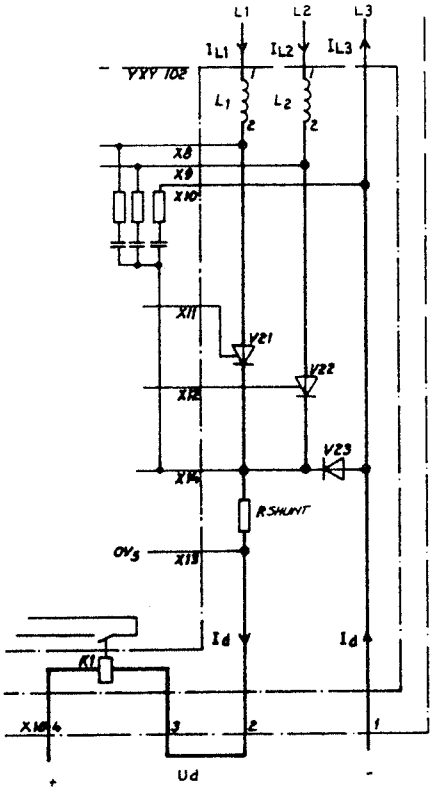


$U_{dmax} = 0.675 \times U_{vN}$

$I_{L1max} = I_{L2max} = \sqrt{\frac{1}{3}} \times I_d$

$I_{L3max} = \sqrt{\frac{2}{3}} \times I_d$

Fig 2-4 Type YFHE, 2-pulse 1-way with free-wheeling diode

(54)

## 2.3
## Supply circuits

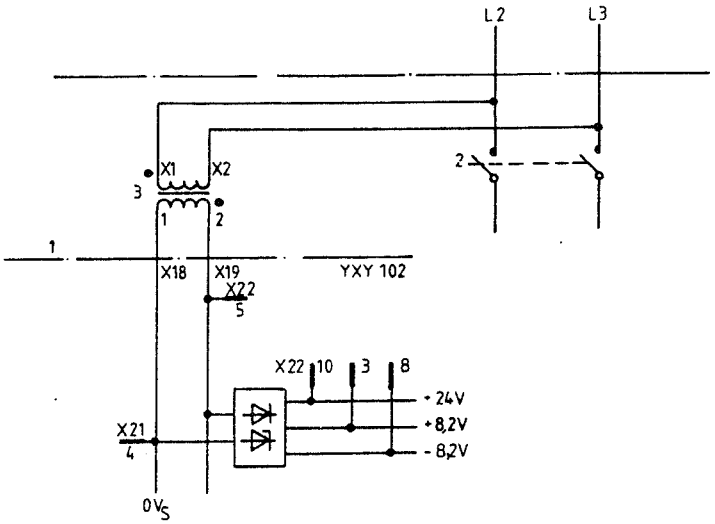


Fig 2-5

Transformer 3 is connected to L2-L3 before the main contactor. The secondary voltage of the transformer is used as a reference voltage for the trigger pulse unit and for rectification to +24 V. The d.c. voltage is stabilised to ±8.2 V with zener diodes.

## 2.4
## Trigger pulse circuits, YFBE

Printed circuit board YXY 102 is identical in YFBE and YFHE, YFBE uses only one trigger pulse channel (X12).

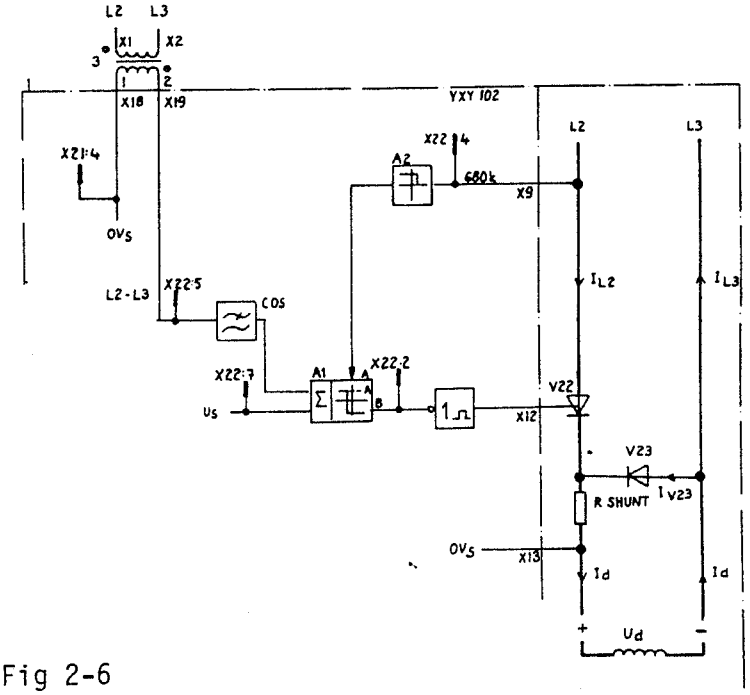


Fig 2-6

The phase position of the secondary voltage from transformer 3 is L2-L3. It is filtered and phase-shifted so that the voltage cos has its zero crossing about 75 °el after L2-L3. The signal cos and $U_S$ are added in level discriminator A1. Signal B goes to "0" when the sum of cos and $U_S$ is greater than the operating value, if the off-state voltage of the thyristor exceeds the operating value of level discriminator A2. Signal B is inverted, and a gate pulse about 50 µs long goes to the thyristor.

The thyristor fires, and signal B is held at "1" by signal A. If the current falls below the holding current, the thyristor stops conducting. If the off-state voltage then exceeds the operating value of A2, a new trigger pulse is given.

The delay angle of the trigger pulse can be varied relative to L2-L3 by varying the control voltage $U_S$. When the voltage L2-L3 is positive and a trigger pulse has been given, the current $I_d$ flows from phase L2 through V22 and the field winding, back to phase L3. The voltage $U_d$ follows L2-L3. When the voltage L2-L3 goes negative, thyristor V22 is subjected to reverse blocking voltage, and the current $I_d$ is switched over to freewheeling diode V23. The inductance of the field winding maintains the current $I_d$ until the current is switched (commutated) over to V22.

8

Fig 2-7 shows voltages and currents for different values of control voltage $U_S$.

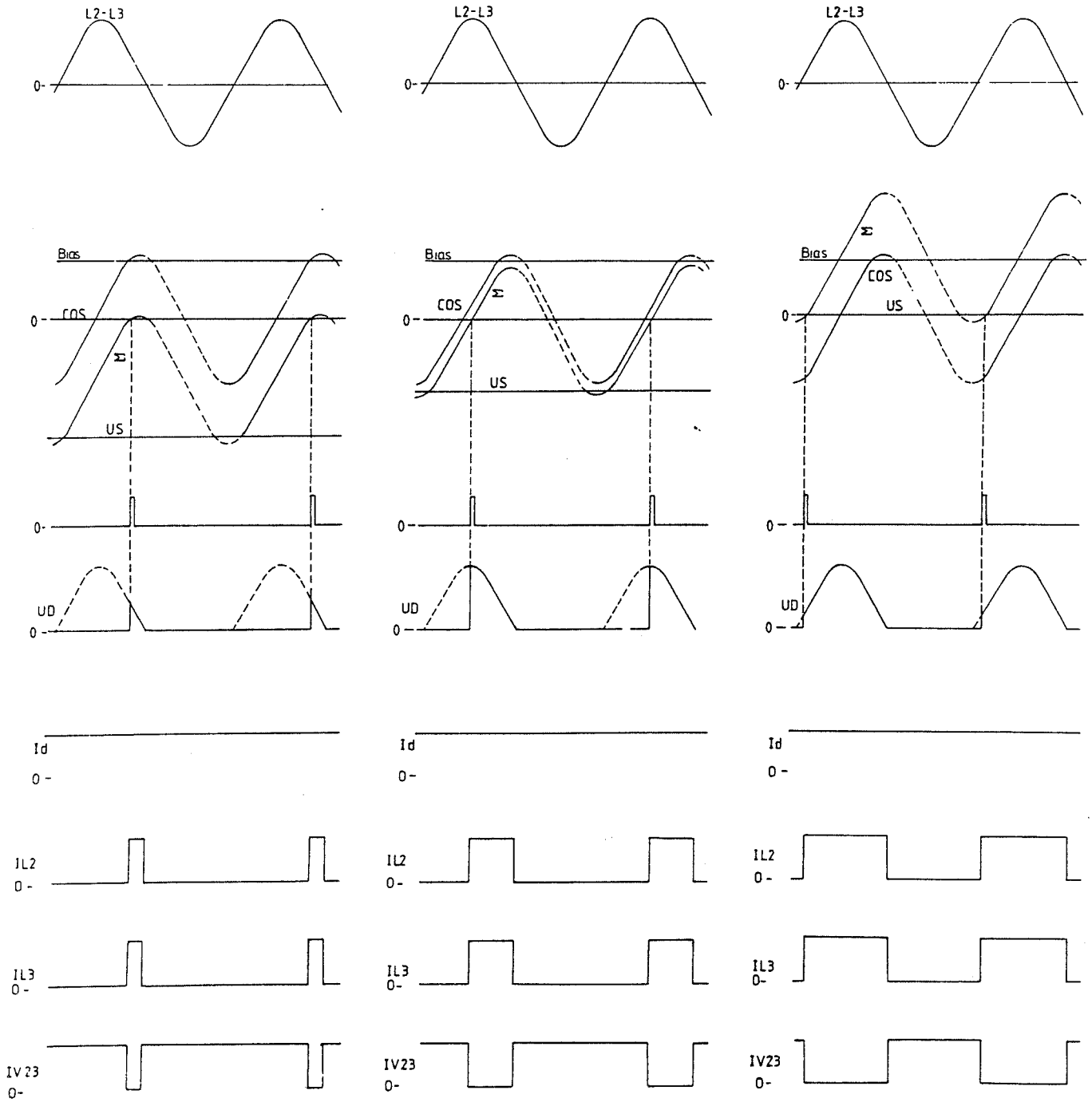


Fig 2-7

## 2.5
## Trigger pulse circuits, YFHE

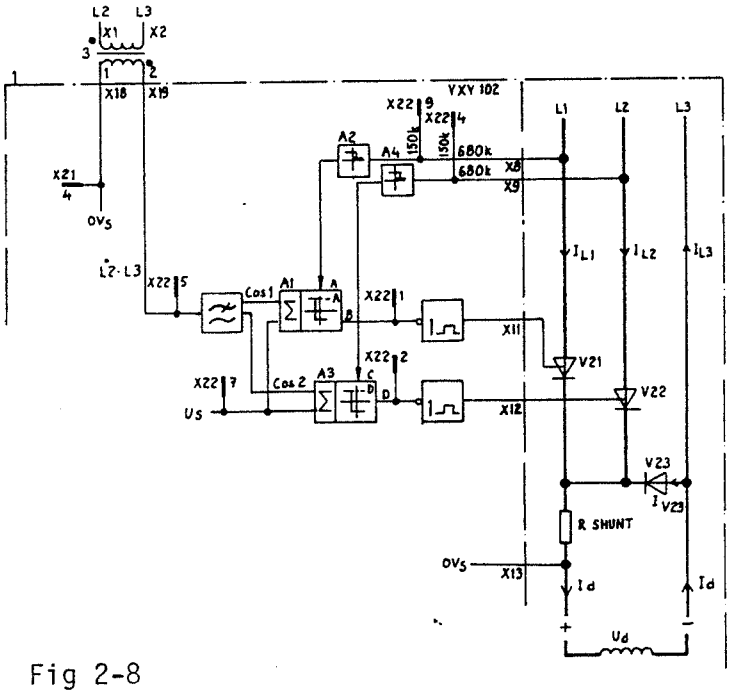


Fig 2-8

The phase position of the secondary voltage from transformer 3 is L2-L3. The voltage is filtered and phase shifted so that tl zero-crossing of voltage cos 1 is 30 °el after L2-L3 and 90 °e after L1-L3. The signals cos 1 and $U_S$ are added in level discriminator A1.

Signal B goes to "0" when the sum of cos and $U_S$ is greater thai the operating value, if the off-state voltage of the thyristor exceeds the operating value of level discriminator A2. Signal is inverted, and a trigger pulse about 50 µs long goes to thyristor V21.

The thyristor fires, and signal B is held at "1" by signal A. If the current falls below the holding current, the thyristor stops conducting. If the off-state voltage then exceeds the operating value of A2, a new trigger pulse is given.

The zero-crossing of voltage cos 2 is 75 °el after L2-L3. The signals cos 2 and $U_S$ are added in level discriminator A3. Signal D goes to "0" when the sum of cos and $U_S$ is greater tha the operating value, if the off-state voltage of the thyristor exceeds the operating value of level discriminator A4. Signal is inverted, and a trigger pulse about 50 µs long goes to thyristor V22.

8

The thyristor fires, and signal D is held at "1" by signal C. If the current falls below the holding current, the thyristor stops conducting. If the off-state voltage then exceeds the operating value of A2, a new trigger pulse is given.

The delay angle of the trigger pulses are varied by varying the control voltage $U_S$. When the voltage L1-L3 is positive, and a trigger pulse has been given to V21, the current $I_d$ flows from phase L1 through V21 and the filed winding, back to phase L3. The voltage $U_d$ follows L1-L3.

When the voltage L2-L3 goes more positive than L1-L2, and a trigger pulse has been given to V22, the d.c. current is switched over from phase L1-L2. The voltage $U_d$ now follows L2-L3. When the voltage L2-L3 goes negative, thyristor V22 is subjected to reverse blocking voltage, and the current is switched (commutated) over to freewheeling diode V23. The inductance of the field winding maintains the current $I_d$ until it is (commutated) over to V21.

Fig 2-9 shows voltages and currents for different values of control voltage $U_S$.

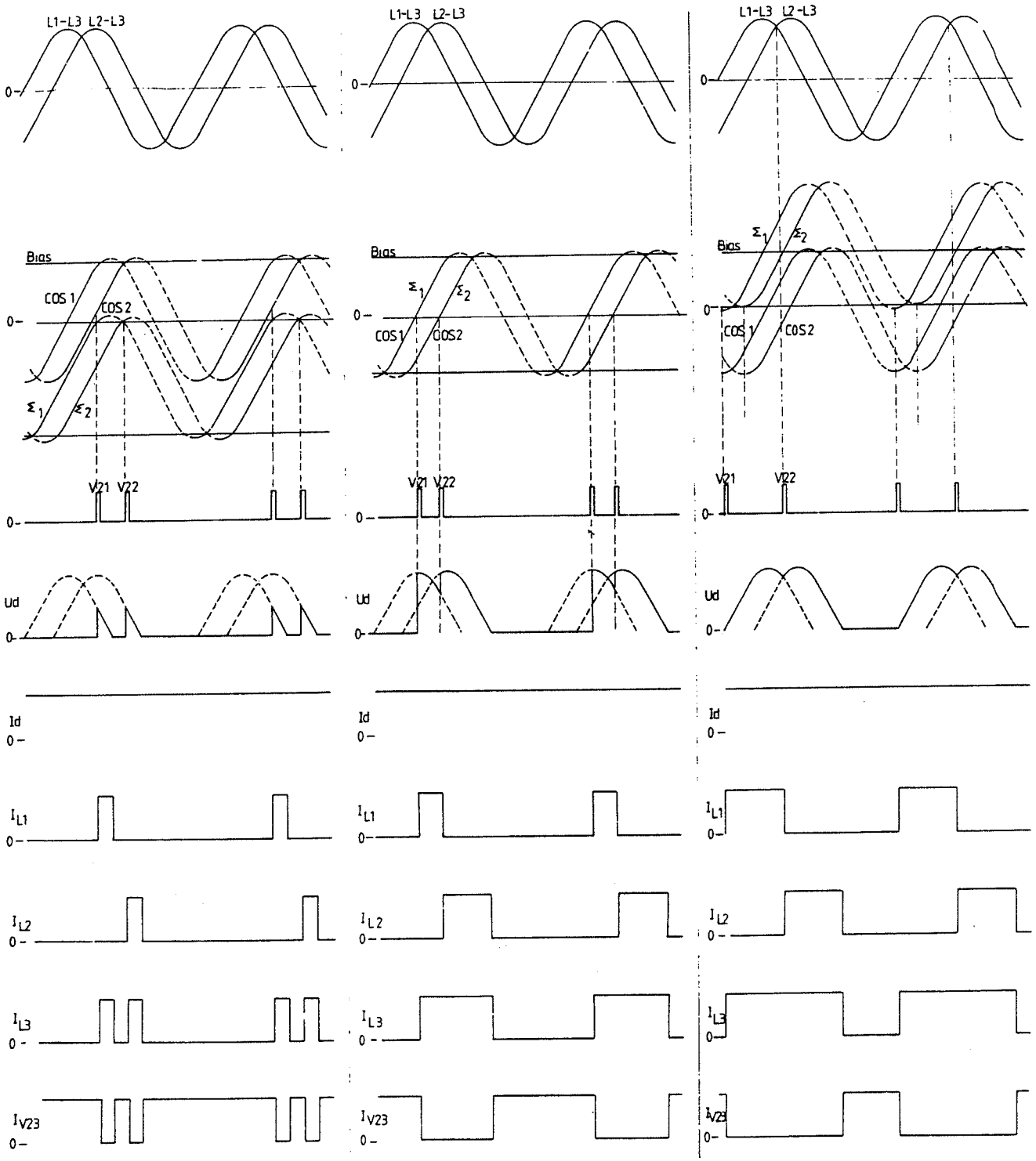


Fig 2-9

## 2.6
## Current control

(54)

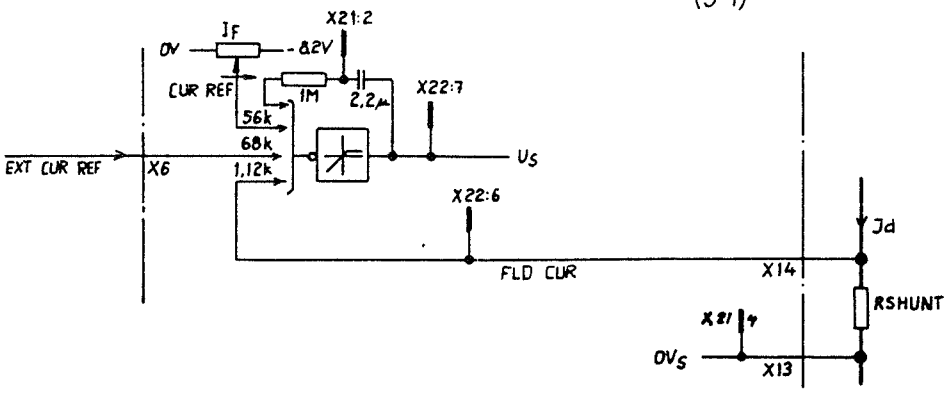


Fig 2-10

The field current is controlled by a PI-controller with the references CUR REF and EXT CUR REF, and with FLD CUR as the feed back signal.

CUR REF is obtained from an internal potentiometer marked $I_F$. Since the electronics are at the same potential as the main circuit, the potentiometer has an insulating spindle so that it can be adjusted while the equipment is running.

EXT CUR REF, which comes from the "Field current reference unit" accessory, is positive, and opposes the action of CUR REF.

The feed back signal FLD CUR takes the form of a voltage drop across a shunt which has the field current flowing through it. The level is 100 mV at $I_{dmN2}$.

The output signal $U_S$ is limited to zero in the positive direction.

Performance: Typical static control error for current control, including reference, for the following deviations:

| | |
|---|---|
| Supply voltage 5% | 0.2% |
| Ambient temperature 5 °C | 0.5% |

## 2.7
## Field current reference unit

(54)

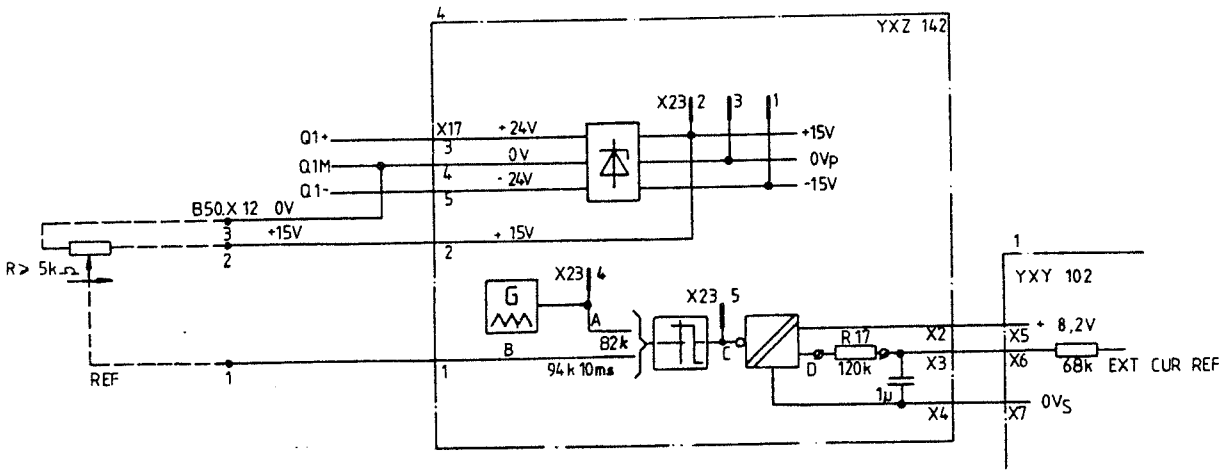


Fig 2-11

A current reference unit which permits external control of the field current is available as an optional extra to field exciters YFBE and YFHE. The current reference unit provides metallic isolation between the external reference circuit and the field exciter. It operates slowly, and is suitable for su applications as manual settings of load sharing in drive syste with several machines.

The signal EXT CUR REF is positive, and opposes the CUR REF signal of the field exciter. The field current can be reduced by as much as 40% of the rated current of the field exciter. The setting range can be reduced by increasing the value of resistor R17, which is mounted on solder tags so that it can easily be changed.

As well as determining the setting range, resistor R17 affects the filter time-constant. Its nominal value is 120 kohm; a resistor of less than 10 kohm should not be used.

The field current reference unit is supplied on the primary si with +24 V (35 mA), -24 V (15 mA), permissible range of variation 20-30 V; these supplies are internally stabilised tc give ±15 V. The +15 V supply is brought out to a terminal blc for an external reference potentiometer (R ≥ 5 kohm).

The output signal A of a sawtooth generator is added to the external reference B, and drives a level discriminator. Varying the external reference alters the mark/space ratio of pulse train C; see fig 2-12. This pulse train is inverted and taken via an optocoupler to a filter with a 50 ms time-constant.

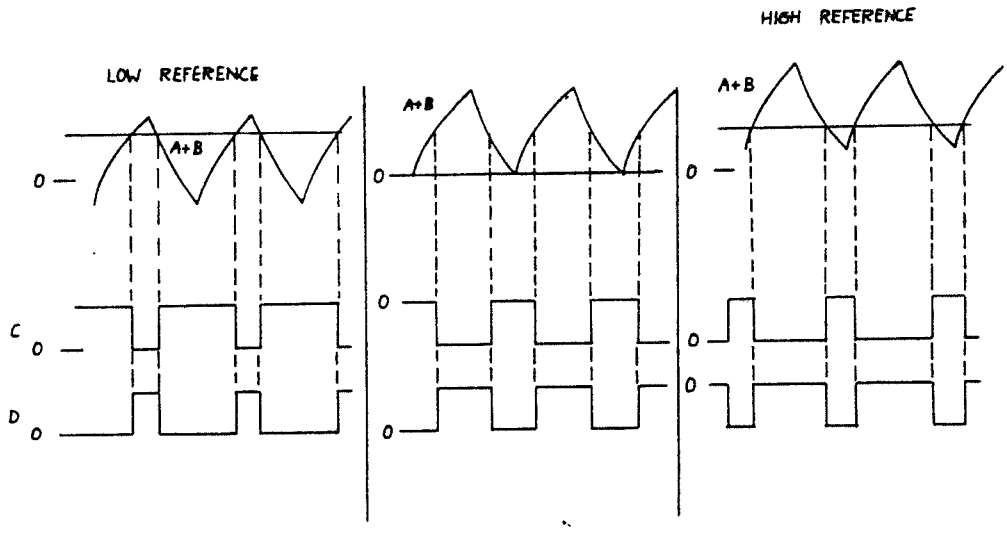


Fig 2-12

## 2.8 Minimum field current monitor

Minimum current relay K1 is a dry-reed relay; the field curren flows through its coil. The operating values of the relay are fixed relative to the field exciter rated current $I_{dmN2}$; see table below.

| Rated current (A) | Pick-up value (A) | Drop-out value (A) |
|---|---|---|
| 1 | 0.13-0.19 | > 0.08 |
| 2 | 0.32-0.47 | > 0.2 |
| 5 | 0.65-0.95 | > 0.4 |
| 10 | 1.3-1.9 | > 0.8 |
| 20 | 2.6-3.8 | > 1.6 |

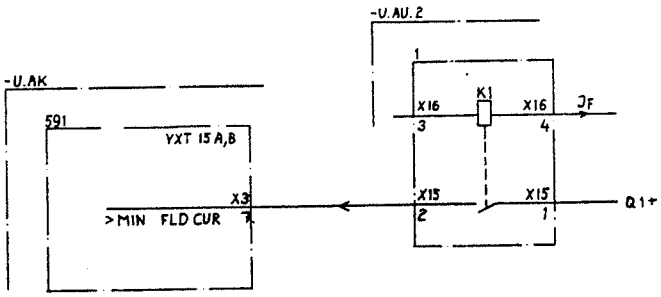


Fig 2-13

Minimum current relay K1 gives a signal to the sequential control equipment when the field current is > MIN FLD CUR. On field current reversal the minimum current raly acknowledge via the filed current reversal logic. See Section 3. The relay contact is designed for max 60 V/75 mA resistive load. There is a 22 ohm resistor in series with the contact.

If a connection for an external field exciter has been ordere the external minimum field current acknowledgement signal is connected in series with the internal signal. See also Secti 6 of YT 280-103 E.

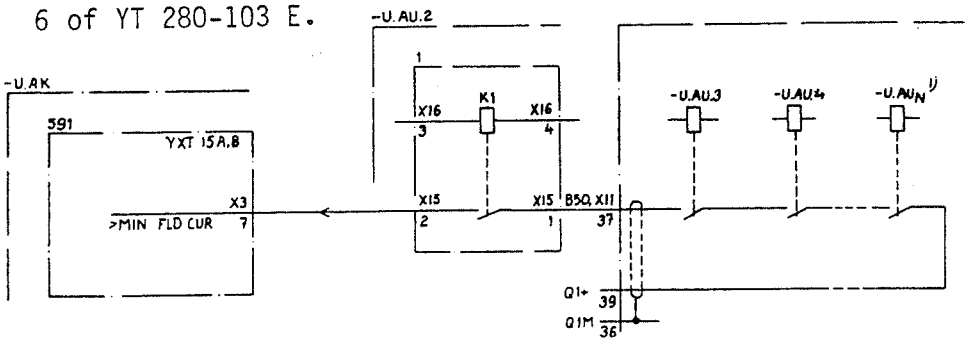


1) Max ten external field exciters type YBLH, YBLJ, YFBE or YFHE

Fig 2-14

## 2.9
## Overcurrent monitor

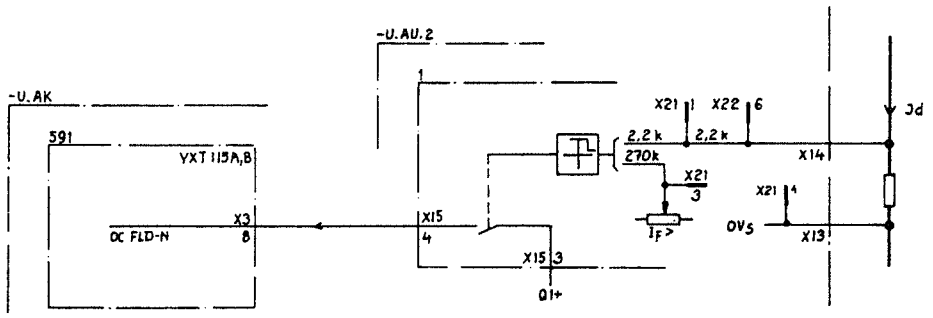


Fig 2-15

Potentiometer $I_F$> has an insulated spindle so that it can be adjusted with the equipment in service. The setting range is 0-120% of $I_{dmN2}$.

In normal service the field current is below the set tripping level (pot $I_F$>) and contact X15:3-4 on the output relay is closed. If there is an overcurrent, contact X15:3-4 opens. The sequential control equipment on YXT 115 trips the armature convertor, the order FLD EXC ON goes to "0", and field exciter contactor 2 drops out.

The relay contact is designed for max 60 V/50 mA resistive load. There is a 47 ohm resistor in series with the contact.

If a connection for an external field exciter has been ordered, the external overcurrent trip signal is connected in series with the internal signal. See also Section 6 of YT 280-103 E.

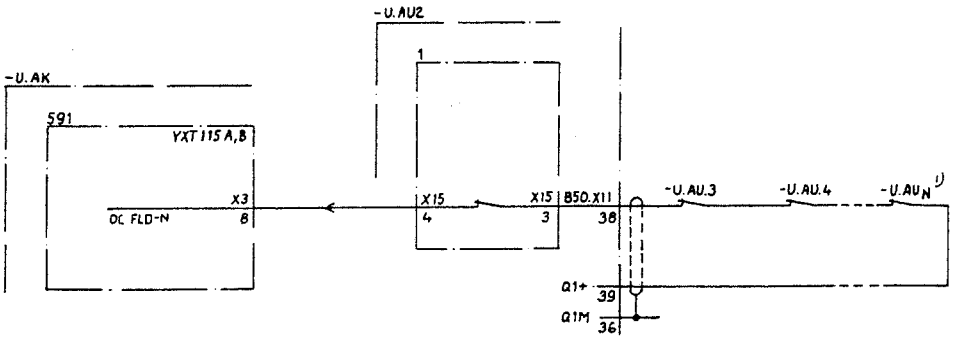


1) Max ten external field exciters type YBLH, YBLJ, YFBE or YFHE

Fig 2-16

## 3 FIELD CURRENT REVERSAL

Field exciter or unregulated/adjustable field current can be fitted with an electromechanical field reversal unit. The fie reversal unit permits the direction of rotation and torque to reversed; this is known as four-quadrant drive.

The unit has circuits to reverse the field current, to connect field discharging resistors, to release the armature convertor and to block field minimum current tripping during the reversa operation.

The field current reversal unit is mounted together with the field exciter on a single panel, forming one function unit.

### 3.1 Main circuit

On changing from forward to reverse operation, the circuit wor as follows. See figs 3-1 and 3-2.

Initially FLD EXC ON and FWD are "1".

1 FLD EXC ON goes to "0", and the supply is disconnected; th field current continues to flow through the diode bridge ("freewheeling effect"), DSCH FLD goes to "1" and discharg resistors 8-10 are connected across the field.

2 FWD goes to "0", and the diode bridge is disconnected from the field circuit; the field circuit is switched over to resistors 8-10, and the energy in the field is discharged. Capacitor 7 enables contactor 3 to open more easily.

3 BWD goes to "1".

4 FLD EXC ON goes to "1". When the voltage across the discharging resistors falls below the field exciter voltag the field exciter forces the field current down to zero, a then towards rated current in the negative direction.

5 The field current exceeds the pick-up level of relay K1 an >MIN FLD CUR goes to "1".

6 DSCH FLD goes to "0", and field current reversal is complete.

#### 3.1.1 Supply failure

8 In the event of a supply failure, all contactors drop out immediately. This opens the field circuit, and the field voltage rises. The voltage is limited by varistor 6. After about 10 ms the circuit is closed by break (NC) contacts on contactors 3-5, and discharging resistors 8-10 are connected across the field.

(54 55)

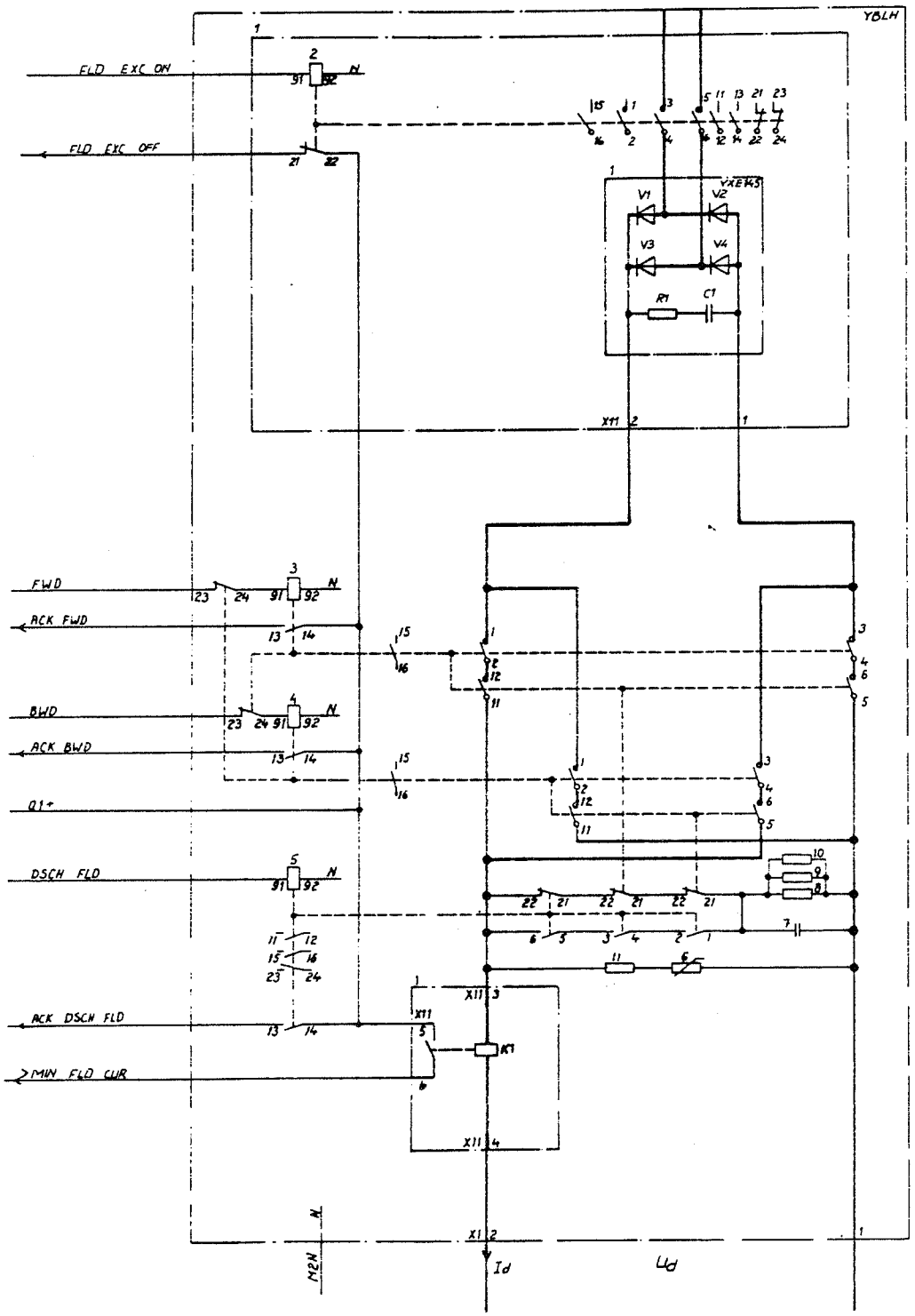
YBLH
FLD EXC ON
FLD EXC OFF
VXEH3
V1
V2
V3
V4
R1
C1
X11
FWD
ACK FWD
BWD
ACK BWD
Q1+
DSCH FLD
ACK DSCH FLD
MIN FLD CUR
K1
X1
Id
Ud
M2N

Fig 3-1

3.1.2
Field current reversal time

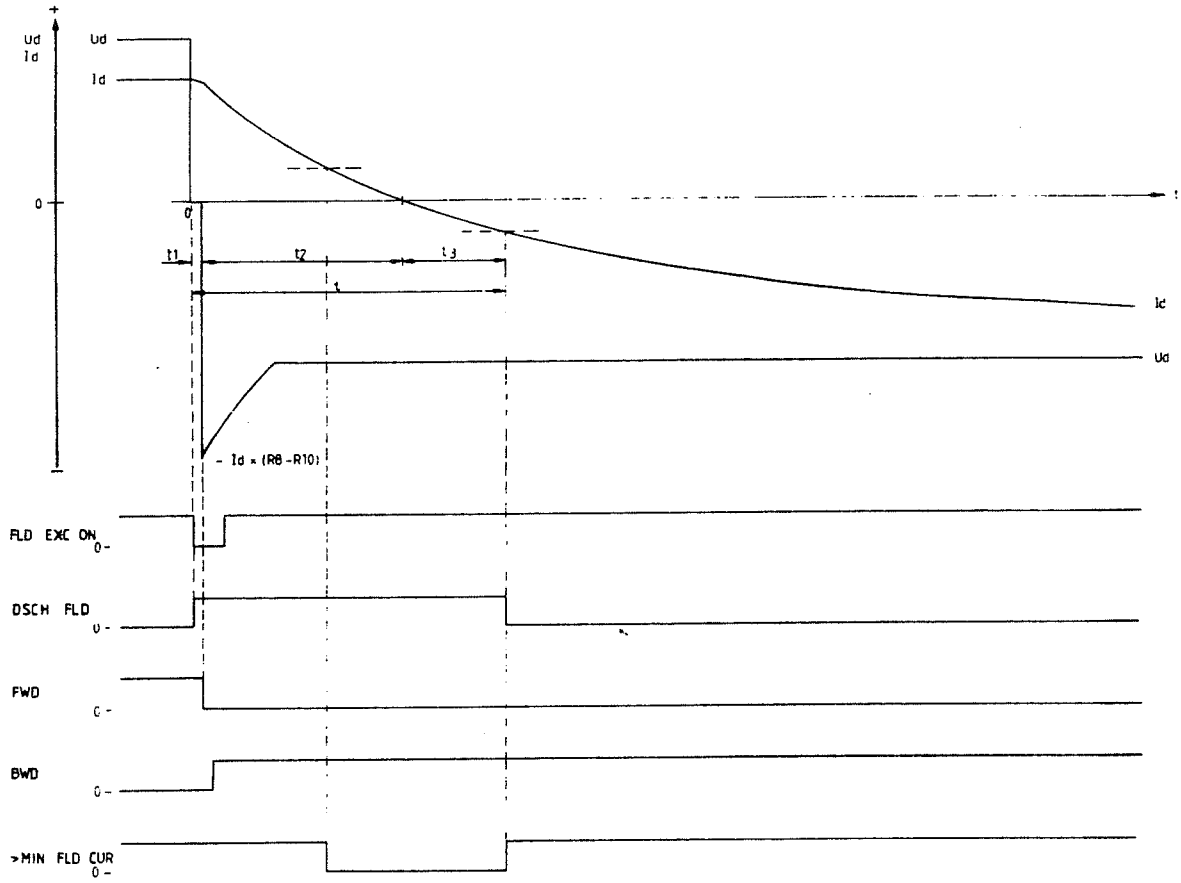


Fig 3-2

The total field current reversal time is in three parts: contactor operating time $t_1$, current force-down time $t_2$, and current force-up time $t_3$.

The contactor operating time $t_1$ is about 35 ms, and can normal be disregarded.

The total field current reversal time t is given by:

$$t = t_1 + t_2 + t_3 \approx \frac{L_{field}}{R_{field}} \times \ln \left(\frac{1 + K}{K - \alpha}\right)$$

8

$$K = \frac{\text{Max voltage from field exciter}}{\text{Rated field voltage}}$$

$$\alpha = \frac{\text{Min. fld. cur. ind. level}}{\text{Rated field current}}$$

3.1.3
Frequency of reversals

Discharging resistors 8-10 absorb power on each reversal. The maximum permitted number of reversals is 60 per hour, provided that they occur at regular intervals.

3.2
Control circuits

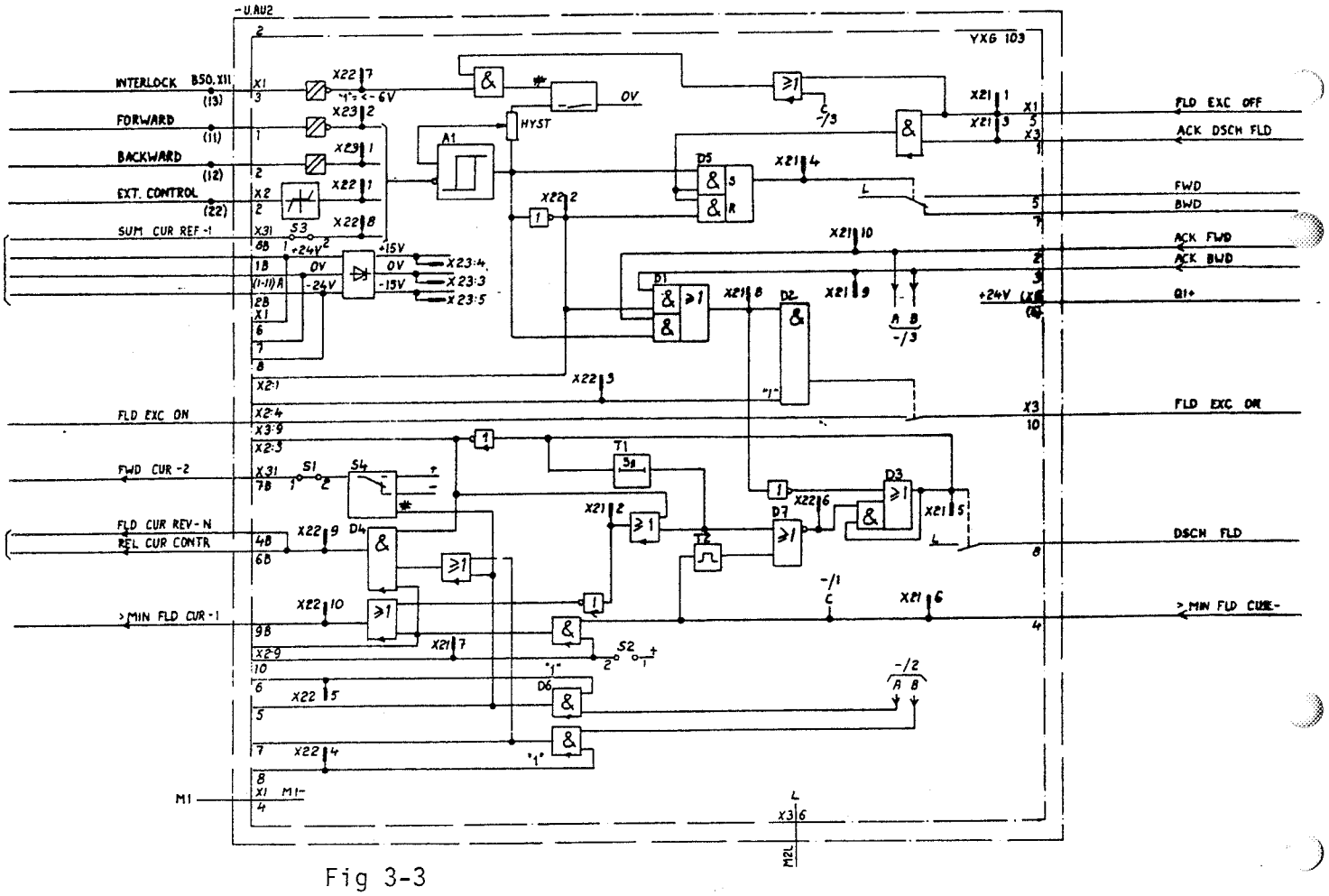


Fig 3-3

The direction reference SUM CUR REF-1 (negative in the forward direction) from the current reference summator in the armature convertor, controls hysteresis flipflop A1. The flipflop can be controlled by the following signals, regardless of the sign of SUM CUR REF-1:

EXT CONTROL FWD-BWD (X2.2) (15-30) V, negative for forward, positive for reverse
EXT CONTROL FWD (X1.1) +110 V via optocoupler
EXT CONTROL BWD (X1.2) +110 V via optocoupler

The signals EXT CONTROL FWD (X1.1) or EXT CONTROL BWD (X1.2) control the flipflop regardless of the status of the EXT CONTROL FWD-BWD (X2.2) signal. The hysteresis of flipflop A1 (as seen from input X31.8B) can be set with the HYST potentiometer within the range 0.1-10 V.

Flipflop A1 is interlocked by the signal INTERLOCK (X1.3 +110V) and cannot change over when INTERLOCK is "1". The flipflop is also interlocked when FLD EXC OFF and >MIN FLD CUR-1 are "0".

The sequence for changing from FWD to BWD is as follows:

1 The signal SUM CUR REF-1 goes from negative to positive. I the hysteresis setting is exceeded, the output of the hysteresis flipflop goes to "0".

Since ACK FWD is "1" and ACK BWD is "0", D1, D2 and FLD EXC ON go to "0". At the same time DSCH FLD goes to "1" via D3 CUR REV FLD-N and REL CUR CONTR go to "0" via D4, and the armature convertor is phase retarded.

2 The signal ACK DSCH goes to "1" and enables D5 to change over to the new direction. FWD goes to "0".

3 BWD goes to "1" and ACK BWD goes to "1". This causes D1, I and FLD EXC ON to go to "1". The signal ACK FWD goes to "( and controls selector S4 via D6 so that the signal FWD CUR goes negative.

4 When the field current has built up in the new direction, >MIN FLD CUR goes to "1". A pulse from timer circuit T2 v D7 resets D3, and DSCH FLD goes to "0". The signals FLD C REV-N and REL CUR CONTR go to "1". The armature convertor is released, and field current reversal is complete.

Timer circuit T1 keeps the signal >MIN FLD CUR-1 at "1" for about 5 s after D3 goes to "1". This means that the exciter will be tripped for field minimum current if field reversal is not completed within 5 s.

The unit requires the following external supplies:

+24 V (20-30 V), 180 mA (X31:1B, X1:6)
-24 V (20-30 V), 25 mA (X31:2B, X1:8)

M1 110 V d.c. 10 mA/input X1:1-3
M2 110/115 V 50/60 Hz, 10 VA, 3 W

## 3.3
## External field exciters

If a connection for external field exciters (-U.AU3...-U.AUN) has been ordered, the exciters are connected as shown in fig 3-4. See also YT 280-103 E, Section 6.

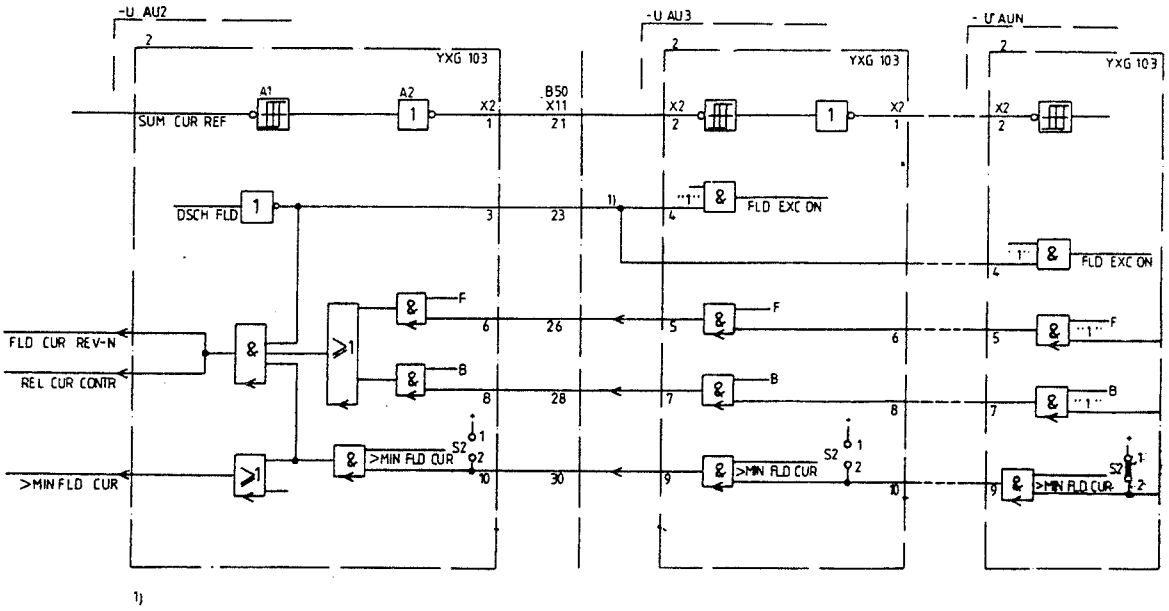


1) To be connected only if master and follower have different field time-constants. Max 18 followers

Fig 3-4

The direction reference SUM CUR REF operates the hysteresis flipflop A1 of the master field current reversal unit, which operates the hysteresis flipflops of all followers via A2. When all followers have acknowledged that they have reversed the direction of field current, and when the field current level exceeds >MIN FLD CUR, the armature convertor is released via the signals FLD CUR REV and REL CUR CONTR.

If the field time constants are very much shorter in the followers than in the master, B50.X11.23 on the master must be connected to X2.4 on all followers. The master then reverses the field current in the usual way, and the followers can discharge via the discharging resistors. When the master has completed field current reversal, B50.X11.23 goes to "1", FLD EXC CUR goes to "1" in the followers, and the field currents are forced towards the new direction. This delay on the followers reduces the differences in emf between the master and follower motors.

# 4
# EXPLANATIONS OF THE DIAGRAMS

## 4.1
## Drawing methods, signal levels

Many of the diagrams in this description are taken from the circuit diagram. Top right on each of them there is a referenc in brackets to the relevant sheet of the set of circuit diagrams.

All jumper links are shown open in the diagrams. The circuit diagram shows which of them are closed for a particular application. Certain digital inputs are disconnected from the relevant signal input when there is no jumper link, and go to a defined level, "0" or "1". If the disconnected input goes to level "1", this is stated on the diagram.

Where digital signals are accessible for measurement at test points, the signal levels are >8 V for "1" and <4 V for "0", unless otherwise stated.

Some signal descriptions have a suffix -N meaning that the signal is negated, i.e. that its level is "0" for the activity referred to by the signal description. A glossary of the signa descriptions used is given in the next section.

## 4.2
## Glossary of signal designations

| English | Swedish | German | French | Signal |
|---|---|---|---|---|
| ACK BWD | KV BACK | RÜCKM RÜCKW | AC AR | Acknowledgement, reverse |
| ACK DSCH | KV URLADD | | | Acknowledgement, discharge |
| ACK FWD | KV FRAM | RÜCKM VORW | AC AV | Acknowledgement, forward |
| CUR REF | STR LEDV | STR SOLLW | REF COUR | Current reference |
| DSCH FLD | URLADD FLT | ENTL FELD | DECH EXC | Discharge field |
| EXT CONTROL | TVÅNGST | ZWANGSSTEUER | COMM FORCEE | External control |
| FLD CUR | FLT STR | FELDSTR | COUR EXC | Field current, actual value |
| FLD CUR REV | STR VÄNDN FÄLT | FELDSTR UMKEHR | COUR EXC AR | Field current reversal |
| FLD EXC ON | FM TILL | FELDVERS EIN | EXC EN | Field exciter on |
| FWD CUR | STR RIKTN FRAM | STR VORW | COUR AV | Forward current |
| INTERLOCK | LÅSN | VERRIEGELUNG | VERROUILLAGE | Interlocking |
| >MIN FLD CUR | >MIN FLT STR | >MIN FELDSTR | >MIN COUR EXC | Field current above minimum level |
| OC FLD | ÖSTR FLT | ÜSTR FELD | SURCO EXC | Field overcurrent |
| REL CUR CONTR | UPPST STR REG | FREIG STR REGL | DEBLOC REG COUR | Release current control |
| SUM CUR REF | SUM STR LEDV | SUM STR SOLLW | SOM REF COUR | Sum current reference |

8

# TYRAK 8A D.C. DRIVE

## DRIVE CONTROL EQUIPMENT

### Description

This Information deals primarily with the drive control equipment, but also includes points pertaining to the complete drive system.

The drive control equipment overrides the control equipment for the converter. Its primary task is to control process parameters such as speed, flow, tension, etc.

A description of each electronic board is given in separate Informations.



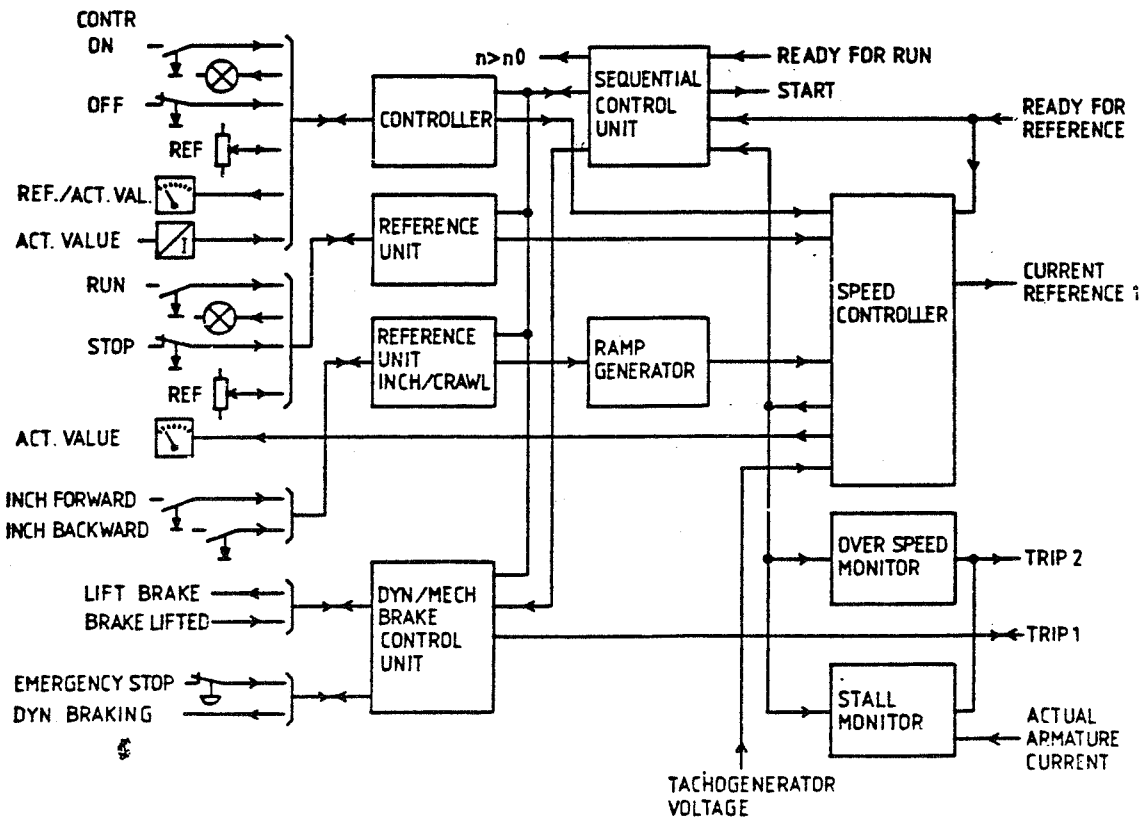

## Contents



## Scope

The location of the drive control equipment in the total drive system can be seen in Fig. 1.

## Function

To simplify the description it is assumed that the converter is a power module where the input signal is current reference and the output signal is rotor and field current. The converter is turned on by means of a pushbutton or relay (ON), see Fig. 2. Acknowledgement that the converter has been switched on is READY FOR RUN. This acknowledgement is transmitted to the drive control equipment. This signal allows the drive control system to order start (START 1). The start order instructs the rest of the converter to be switched on.

When all this has been performed, the converter is ready to control, i.e. it is ready for reference. Acknowledgement of this is the RDY1 F REF signal. This signal allows the drive control equipment to start controlling, i.e. it will give a current reference to the converter.

The signals mentioned above are the most important to take place between drive control equipment and converter control equipment.

An example of the drive control equipment is shown on the first page of this Information. Each square represents an electronic board which includes both control and operating circuits. Since several reference units can give the start order, these are interlocked so that only one can be in operation at a time.

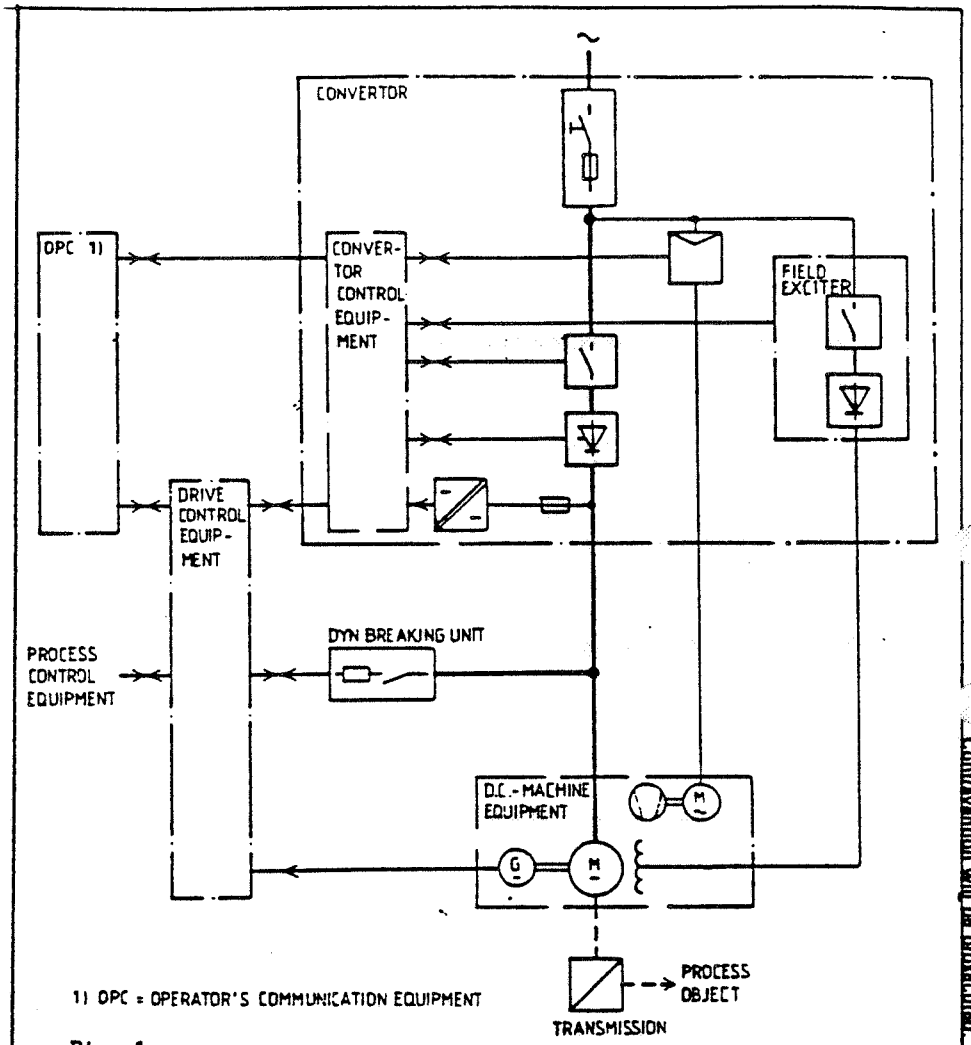


Fig. 1
Scope of drive system

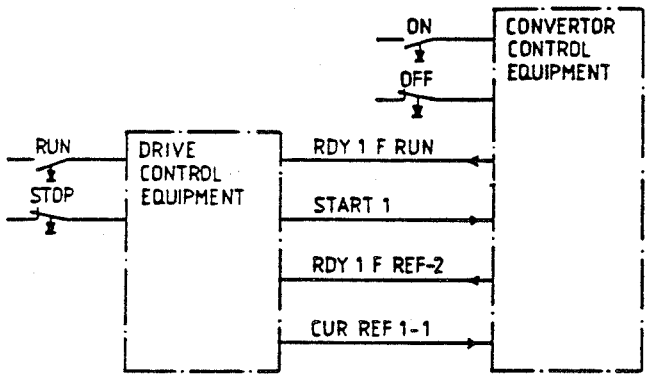


Fig. 2
Important signals between drive control equipment and converter control equipment.

## Design

The drive control equipment consists of a number of electronic boards, all of which are connected to a connection board, and mounted on the front side of a hinged door. Each electronic board has its specific place and for each place a number of units have been developed. Figure 3 shows this door with electronic boards inserted in all positions.

The number of alternatives possible is stated on each unit. The function of each unit can be altered to a certain extent by inserting programmable jumpers at predetermined points.

The connection board, which is always included in the basic model, is only provided with connections.

There is a test unit YXO 115 to facilitate commissioning and service of the drive system. This unit is connected to output X32 on the connection board.

The converter control equipment is fitted on the rear of the door. All transmission of signals between drive control equipment and converter control equipment is performed in a ribbon cable. The ribbon cable is connected to contact X31 on the connection board.

External signals such as operation instructions, references and acknowledgement of status are connected to the electronic board by means of screw terminals on the board. When the converter module is enclosed and the terminal connection ordered, the most important of these signals are connected to one terminal row (B50). If additional connections are desired between electronic board and B50 terminals, this must be stated when ordering. See technical appendix to order.

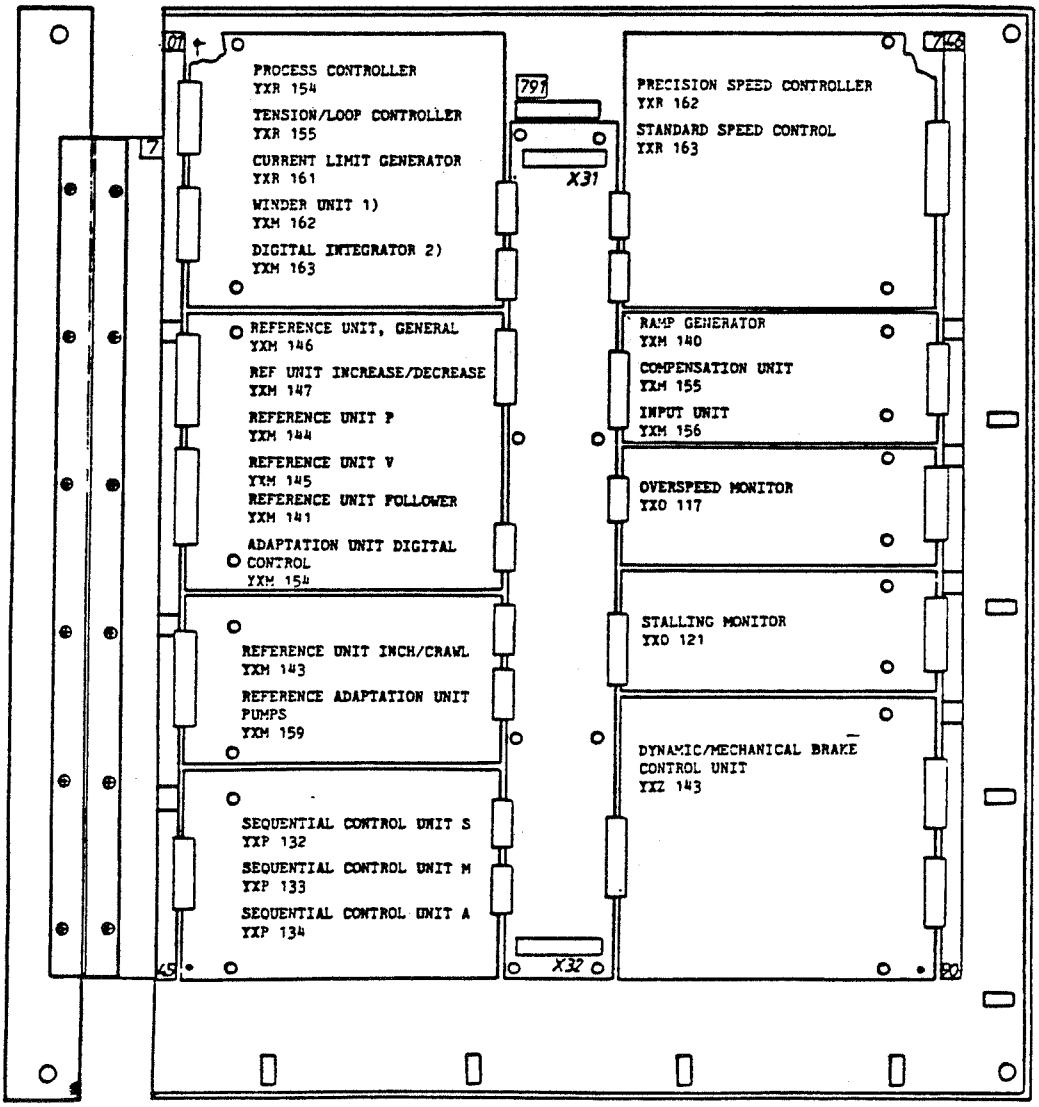


1) The winder unit takes up position 702 as well as position 715

2) Digital integrator is fitted on the winder unit.

Fig. 3 The front of the hinged door. Units are fitted on all board positions. All the units which may be placed in a particular position are listed on each unit.

## List of symbols

Screw terminals have no special designation in the circuit diagram. In the guiding drawing all screw terminals on the boards are connected to B50 terminals. Note that all connections to B50 are shown. Only a few of these are connected in the basic model. The connections which are not included in the basic model have the terminal designation within brackets. The technical appendix to an order shows which of the connections are permanent, the rest of them can be ordered on the same document. Screw terminals have been indicated by a point in the descriptions of the individual units. The following shows the symbols used most frequently in the circuit diagram.

Optocoupler

| A | B |
|---|---|
| low | low |
| high | high |

Optocoupler with negated output

| A | B |
|---|---|
| low | high |
| high | low |

Buffer

| A | B |
|---|---|
| low | low |
| high | high |

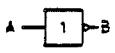

Negated element

| A | B |
|---|---|
| low | high |
| high | low |

OR-element with two inputs

| A | B | C |
|---|---|---|
| low | low | low |
| high | low | high |
| low | high | high |
| high | high | high |

NOR-element with two inputs

| A | B | C |
|---|---|---|
| low | low | high |
| high | low | low |
| low | high | low |
| high | high | low |

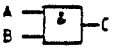

AND-element with two inputs

| A | B | C |
|---|---|---|
| low | low | low |
| high | low | low |
| low | high | low |
| high | high | high |

NAND-element with two inputs

| A | B | C |
|---|---|---|
| low | low | high |
| high | low | high |
| low | high | high |
| high | high | low |

Logic-element general designation

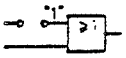

"1" indicates that unconnected input is high

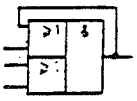

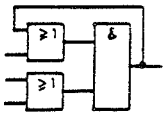

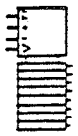

Counter in which the contents are increased or decreased by one unit each time the counting input takes on its high state
R reset
+ increases contents in counter
- decreases contents in counter
> counting input

Monostable element, single shot

Pulse generator

Linear amplifier, non-inverting

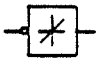

Linear amplifier, inverting

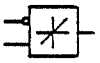

Linear differential amplifier

P-amplifier

P-amplifier with time constant

I-amplifier, integrator

PI-amplifier

D-amplifier

P-amplifier with limited output voltage

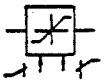

Ditto, external control of limitation

Absolute value converter

Dead band

Level detector

Converter analogue/frequency

Converter digital/analogue

Converter voltage

Converter analogue/pulse intervall

Converter pulse intervall/ /analogue

A B C — Element for multiplication C ~ A . B

A B C — Element for division C ~ A/B

A B C — Element for summation C ~ A + B

$t_1$ $t_2$ — Delay element where the transitation from the low state to the high state at the output occurs after a delay of t1 with reference to the same transition at the input. The transition from the high state to the low state at the output occurs after a delay of t2 with reference to the same transition at the input.

$t_1$ $t_2$ — Ditto, with negated output

t — If t1 = t2 the symbol may be simplified

Direction of signal. The arrow is normally used if the direction is from right to left

Ditto, the transmission of signals can occur in both directions simultaneously

Ditto, the transmission of signals can occur in both directions, however not simultaneously

X21.2 — Testterminal, pin

S1 1 2 — Place for jumper to connect terminals 1 and 2

10k — Resistance in circuit

Resistor

Resistor with moving contact

Resistor with preset adjustment

R50 100k — Resistor on soldering lugs

C12 2,2µ — Capacitor on soldering lugs

A — Relay or electronic contact, closed when A is high

A — Relay or electronic contact, closed when A is low

A B — Latch relay, contact closes when A is high and opens when B is high.

## General data

All opto couplers are designed to be controlled by 110 V, approx. 11 mA DC. The relay contact outputs may be loaded with max 250 V, 5 A AC or max 30 W DC if nothing else is stated. Relay contacts for event recorder are connected in series with a resistor. These contacts may be loaded with max 60 V, 20 mA DC or AC (resistive load).

Analogue inputs are normally designed for 0-10 V (max 15 V).

When measuring logical states on test terminals the signal level is > 8 V for high level ("1") and < 4 V for low level ("0") if nothing else is stated.

## Signal designations

Figure 4 shows all the signals which can occur on the connection board, together with an explanation.

| | |
|---|---|
| Q1I | power supply +24 V for indication |
| Q1+ | power supply +24 V |
| Q1- | power supply -24 V |
| +15V | power supply |
| -15V | power supply |
| +10V | reference voltage |
| -10V | "- |
| Q1M | power supply, zero |
| COM | control signal zero |
| ARM CUR1-3 | actual value of armature current |
| CONTR VOLT-2 | control voltage to trigger pulse generator |
| CUR REF1-1 | current reference |
| CUR REF2 | "- |
| CUR REV-N | current reversing (=low level) |
| FAST STOP-N | fast stop order (= low level) |
| FWD CUR | forward current |
| GAIN ADAPT | gain adaption |
| INCH/CRAWL-N | inch/crawl running (= low level) interlocks run mode |
| IND RES | indication, reset |
| INTLK TRP RES-N | interlock trip reset (= low level) |
| MCONT OFF | main contactor (breaker) off |
| n n0 | actual speed greater than n0 |
| NEG LIM | negative limit (current limit) |
| POS LIM | positive limit (current limit) |
| RDY1 F REF | ready for reference |
| RDY2 F REF | "- |
| RDY1 F RUN | ready for run |
| RDY2 F RUN | "- |
| RUN-N | run (= low level), interlocks inch/crawl mode |
| SP REF1 | speed reference |
| SP REF2 | "- |
| SP REF3 | "- |
| SP REF4 | "- |
| SP REF5 | "- |
| SP1 | actual speed (r/min) |
| SP2 | "- |
| START1 | start order for converter control equipment |
| START2 | start order for sequential control equipment |
| START3 | start order for brake control unit |
| SY | supply on |
| TNSN-N (AUTO) | tension control on (automatic), (=low level) |
| TRP-N1 | trip (= low level) |
| TRP-N2 | "- |
| TRP-N3 | "- |
| TRP-N4 | "- |

Fig. 4 List of signals on connection board

Edition 2

# TYRAK® 8A DC DRIVE SYSTEM

Contents





Electronics Division. ASEA S-721 83 Västerås Sweden

Installatior

# 1 TRANSPORT AND STORAGE

The convertor is delivered in transport packaging. Check the goods on receipt against the equipment packing list.

Inform ASEA immediately of any complaints, so that installation of the equipment is not delayed.

If the equipment is not installed immediately after delivery, i must be stored, preferably in its transport packaging, in dry premises protected from dust. The storage temperature limits are -25 °C and +70 °C (diurnal mean temperature max +45 °C).

Enclosed convertors, which are delivered fixed to pallets, must be transported upright with a fork-lift truck, trolley or similar.

If there is an overhead travelling crane where the equipment is to be installed, the lifting eyes of the cabinets may be used; see fig 1-1.

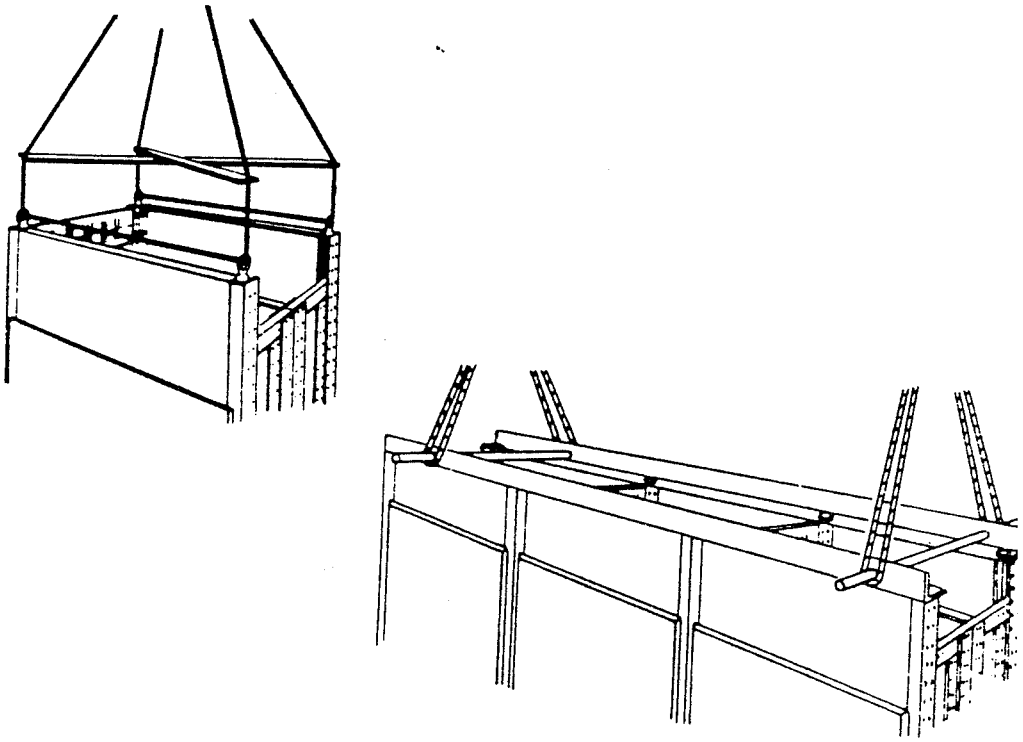

8

Fig. 1-1 Recommended lifting methods

## 2 INSTALLATION

The convertor is intended to be installed indoors in a normal industrial environment, ambient temperature -5 °C to +40 °C. The air must be free from dust and corrosive gases.

Convertors with air filters may be installed in dusty surroundings. The filter, which is washable, must be regularly inspected, and cleaned if necessary. (See YT 280-107 E Maintenance, Section 2.1.)

### 2.1 Convertors without enclosure

The convertor must be installed upright, with the convertor module at the top.

The convertor may be installed in an enclosure or mounted directly on a wall (safety screens must be fitted).
It is recommended that the various units are positioned in the same way as in an enclosed convertor; see fig. 6-5, page 16.

Observe the following points during installation:

1. The convertor module requires a supply of cooling air (convection cooling for 40-140 A convertors, forced cooling with built-in fan for 230-1400 A convertors).

   For the convertor to be loaded at the rated data listed in the catalogue, the air temperature must be < 45 °C measured 10 cm below the thyristor bridge.

   Do not position equipment that gives off large amounts of heat below the convertor.

2. Leave a free space of at least 10 cm above and below the convertor, and at least 5 cm at the sides.

   The space at the sides of fan-cooled convertor module 230-400 A should not be unduly large, since this may result in internal circulation of the cooling air, which in turn leads to overheating.

3. The free through-flow area for the air before and after the convertor (cubicle inlet and outlet) should be > 500 $cm^2$.

The wiring cable supplied with the convertor must be used when making the electrical connections. Prefabricated cable harnesses or ribbon cables are used for certain connections.

The lengths of these connections are stated in fig. 6-7, Other units on page 18.

## 2.2 Enclosed convertors

To ensure that cubicles are not subjected to harmful mechanica stresses when fixed to the floor, check that the floor is flat and level (±2 mm). This is particularly important where sever cubicles are combined.

The cubicles must be bolted together before they are fixed to the floor.

The dimension drawing below shows the recommended sizes and positions for cables and cooling air inlets, and the minimum distances to walls.

Figures 2-1 and 2-2 show the positions of floor holes for cables.

For satisfactory convertor cooling there must be no external pressure drop. The cooling air openings must never be obstructed.

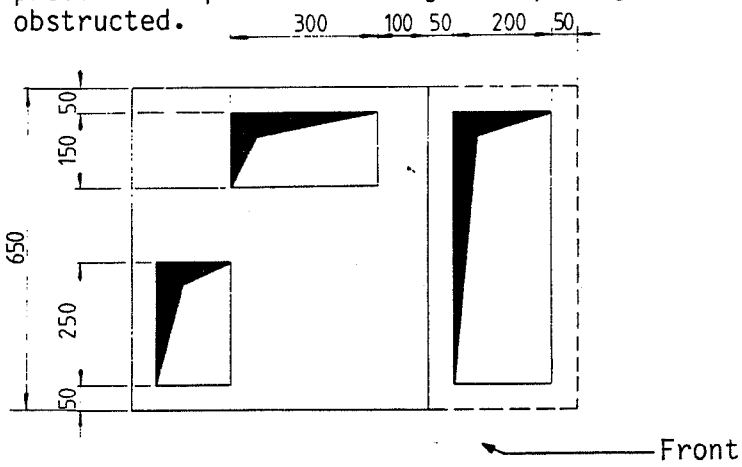


Fig. 2-1 Holes in floor for cables
Convertors 40-400 A

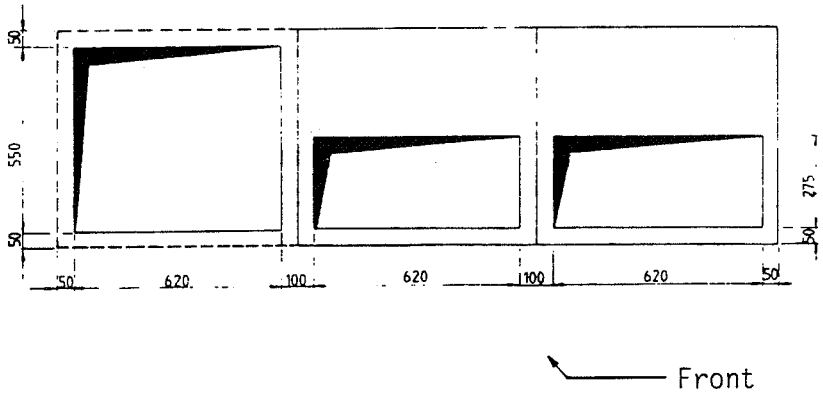


Broken lines = cable cubicle (accessory)

Fig. 2-2 Holes in floor for cables
Convertors 650-1400 A

# 3
# CONNECTION

## 3.1
## Mains circuits

Maximum permitted short-circuit current (symmetrical rms value) of the supply is 50 kA. 60 kA is permissible for convertors with ALG circuit-breakers.

### 3.1.1
### Convertors without enclosure

The convertor must be connected to the mains supply via a load switch and fuses. The table below lists the proper fuse ratings for different convertor rated currents:

| Rated current | Max fuse rating DIN | Max fuse rating BS, UL |
|---|---|---|
| 60 A | 100 A | 80 A |
| 110 A | 200 A | 150 A |
| 220 A | 315 A | 300 A |
| 430 A | 500 A | 450 A |

Where several convertors are connected to the same supply, double convertors YHMK, YHML must be connected via phase reactors. The inductance of the reactors must be about 6 µH/phase for 220 V - 500 V supply voltage, and about 11 µH/phase for 575 and 660 V supply voltage.

A suitable reactor unit may be ordered separately, ordering nos.

4893 1000-CCM (400-400)
4893 1000-CVC (800, 1400)
4893 1000-DBS (650, 1250)

NOTE. For convertors with 400 A rated current, the reactor unit must be installed as shown in fig 6-5, above the convertor fans, or must be equipped with a separate fan.

There will be sufficient inductance if the length of the supply cable is about 25 m (220-500 V) or 45 m (575, 660 V) from the nearest convertor.

The dimension drawings in fig. 6-1, 6-3 on pages 14, 15 show the size and position of the connection points on convertors without enclosure.

3.1.2
Enclosed convertor

A convertor in a VSG enclosure is equipped with a load switch and main fuses and, if it is a double convertor, with phase reactors. The a.c. supply connection of the main circuit is designed for connection to horizontal busbars at the top of the cubicle. A set of bars for the connections between the load switch and the busbars is supplied, but no busbar clamps.
If the convertor has a cable cubicle (accessory) the supply may be connected with cables.
A convertor with an ALG circuit breaker (rated current > 1400 A is designed for connection to the supply by cables entering from below. The d.c. terminals are designed for cable connection. The size and positioning of the d.c. terminals is shown on the dimension drawing, fig. 6-5, page 16.

The factors to be taken into account when deciding on cable size are current, voltage and fuse rating. The necessary information is stated in the apparatus list and the catalogue.

3.2
Other circuits

The field winding is connected to terminals on the field exciter, and the supply cables for external fan motors are connected to the contactors on the "control unit external fans'

Connections to the convertor control equipment (printed circuit boards) can be made either directly to terminal blocks on the circuit boards (flexible leads) or via a special terminal block B50.

The terminals in this terminal block are of type UK5, for cable with a cross-section of up to 4 $mm^2$. The terminal block is an accessory to enclosed convertors.

Connectible area:

| Unit to be connected | Area |
|---|---|
| Field exciter YBLH, YBLJ, YFBE, YFHE | 4 $mm^2$ |
| Field exciter YGBC, YHBC | 10 $mm^2$ |
| Control unit external fans | 2x4 $mm^2$ |
| PCB terminal block | 1.5 or 2x0.75 $mm^2$ |
| Terminal block B50 | 4 or 2x1.5 $mm^2$ |

The positions of the various terminals are stated in fig. 6-7, page 18, Other units.

3.2.1
Field exciter fuses

The field exciter of a convertor without enclosure must be provided with fuses at the supply connection. An uncontrolled field exciter is protected only by the fuses, whilst adjustable and controlled field exciter include overcurrent protection (overload protection). Suitable fuse ratings are listed in the table below.

| Field exciter, type | Fuse 6 A | 10 A | 16 A | 25 A |
|---|---|---|---|---|
| Uncontrolled 2 A | X | | | |
| 5 A | | X | | |
| 10 A | | | X | |
| Adjustable 2 A, 5 A | X | | | |
| 10 A | | X | | |
| 20 A | | | X | |
| Controlled 5 A | X | | | |
| 10 A | | | X | |
| 20 A | | | | X |

3.3
Connection diagram

The connection diagrams in Figs. 3-1, 3-2, 3-3 and 3-4 show examples of the connection of external units to a convertor module, a convertor without enclosure, and a convertor with VSG enclosure.

Connections to function units in the "Control equipment drive system" and specified in the description of the relevant unit. These descriptions form part of the convertor documentation, but are also available separately.

More detailed information is given in the order-linked circuit diagram supplied with each system on delivery.

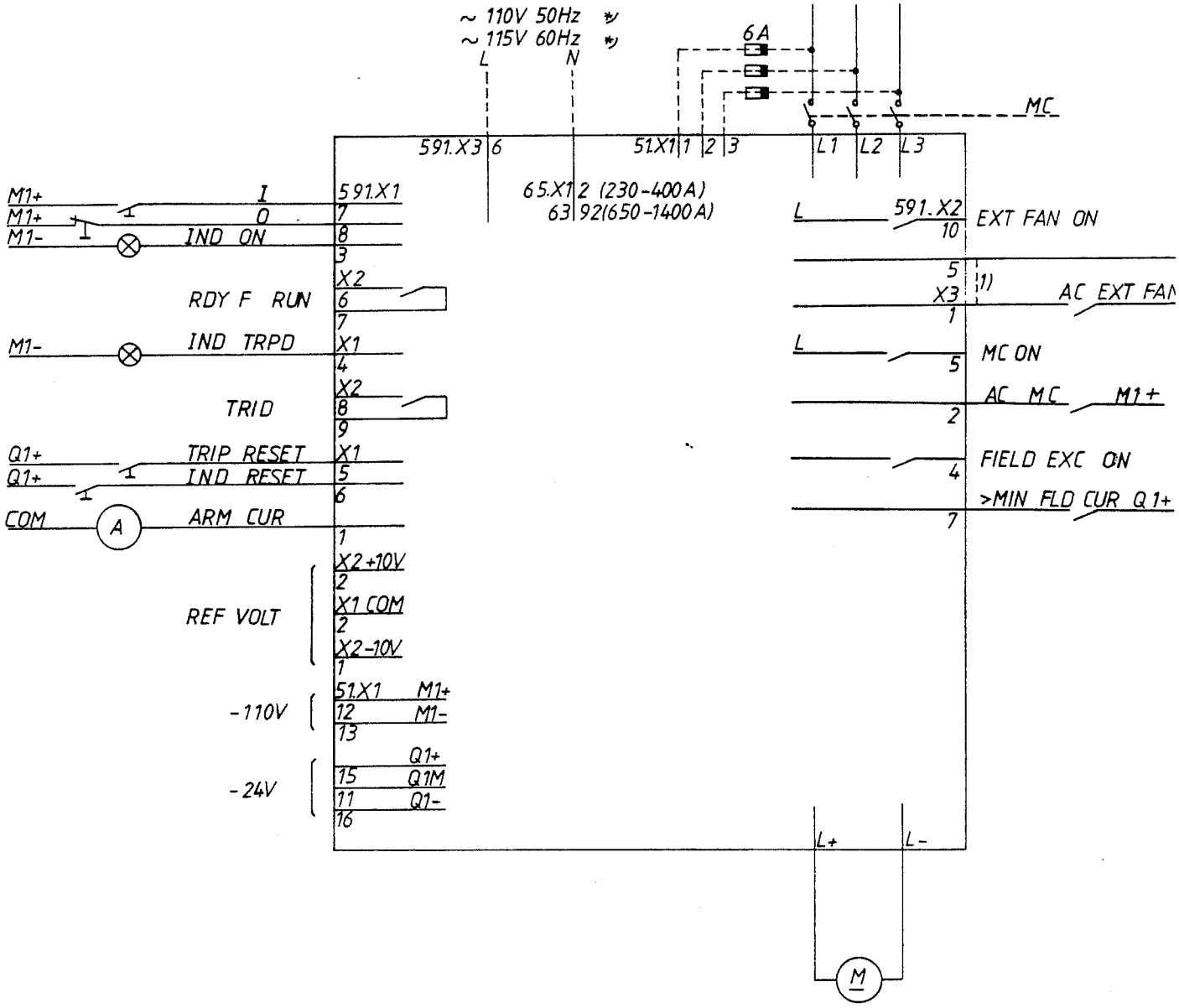


8

1) Linked if no ext fan.

*) For convertor module 230-1400 A only

Fig. 3-1 Convertor module YGMK/YHMK
40-1400 A

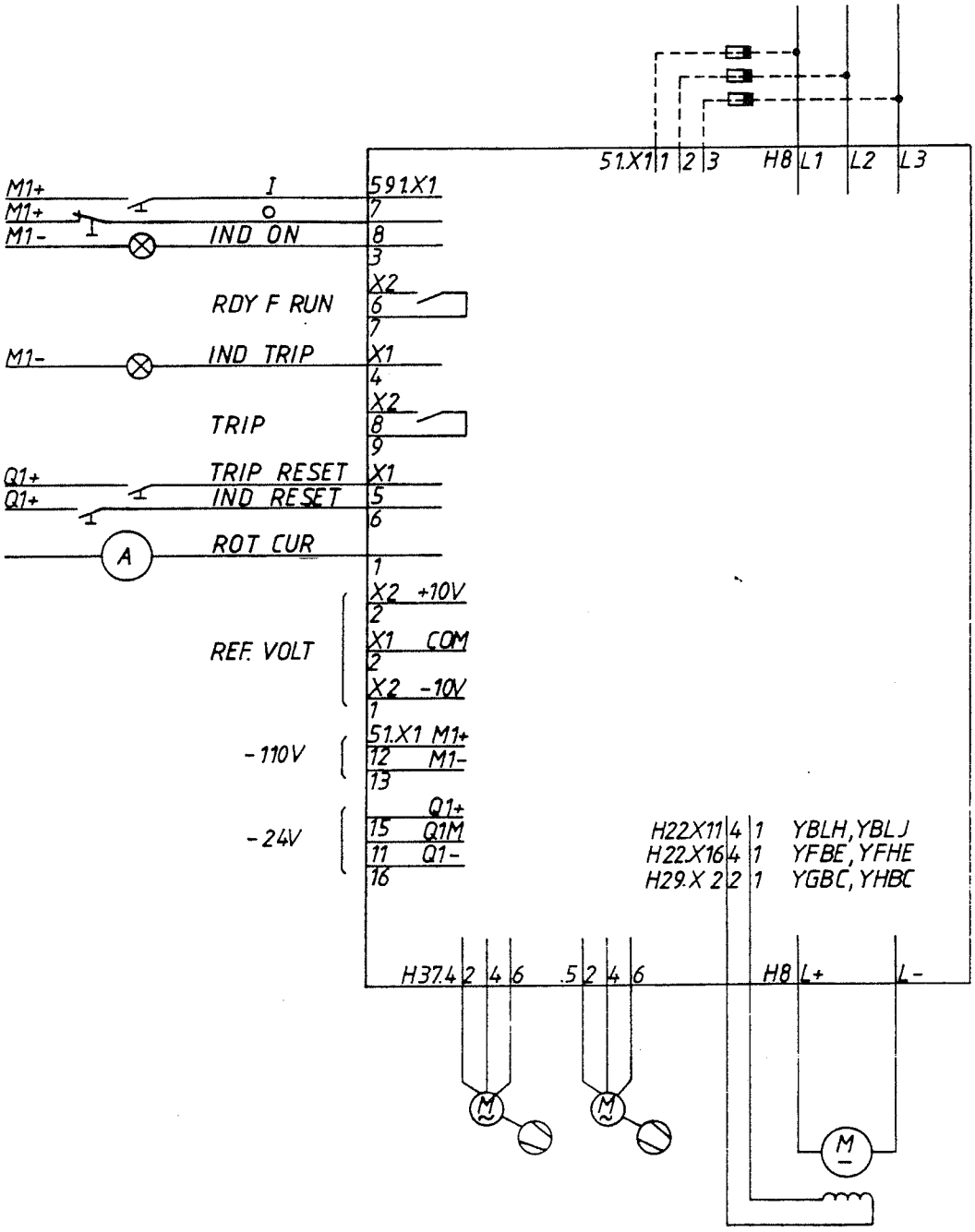


Fig. 3-2 Convertors YGML/YHML
40-400 A, without enclosure

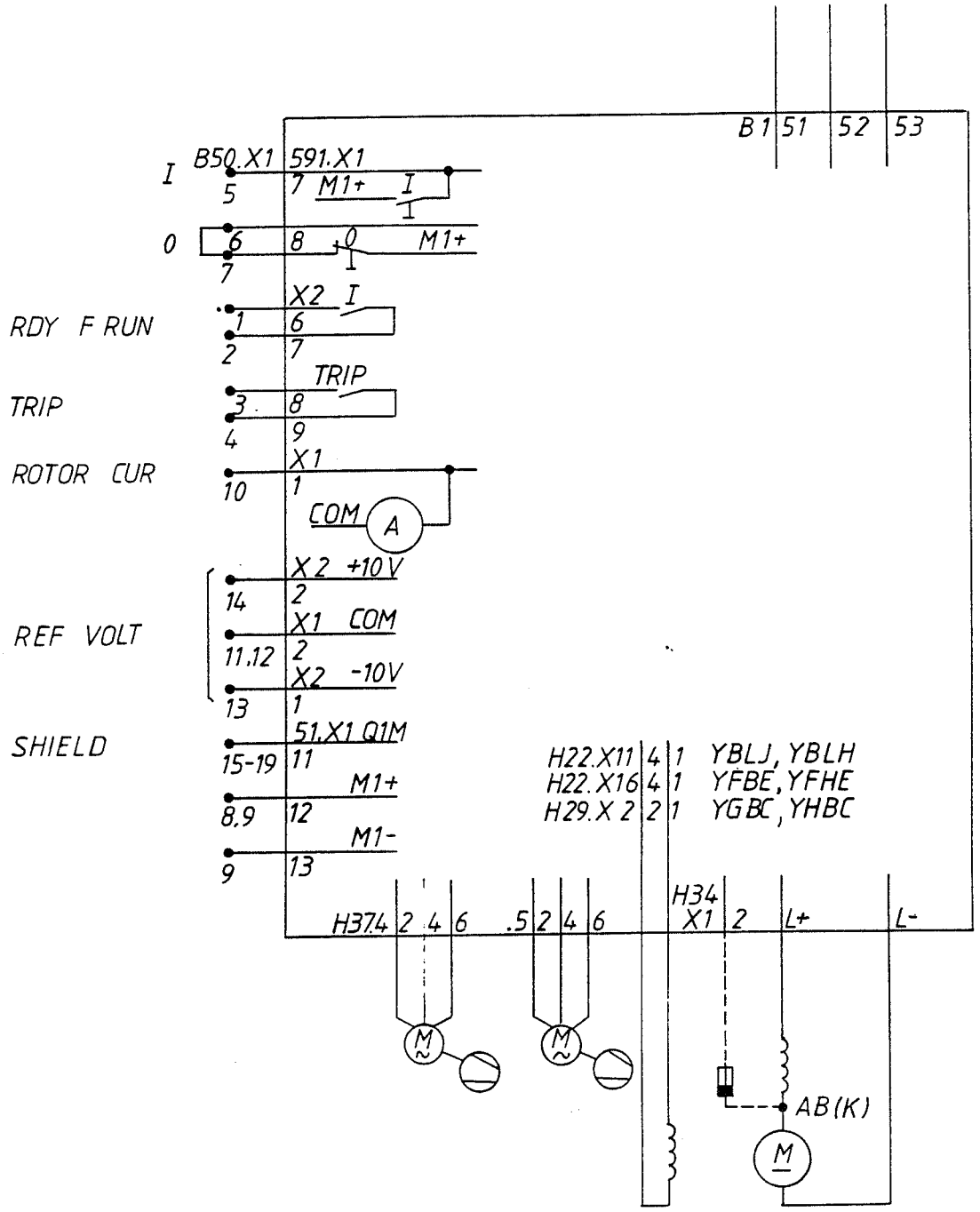


8

Terminal block B50 is an accessory

Fig. 3-3 Convertors YGML/YHML
40-400 A, with VSG enclosure

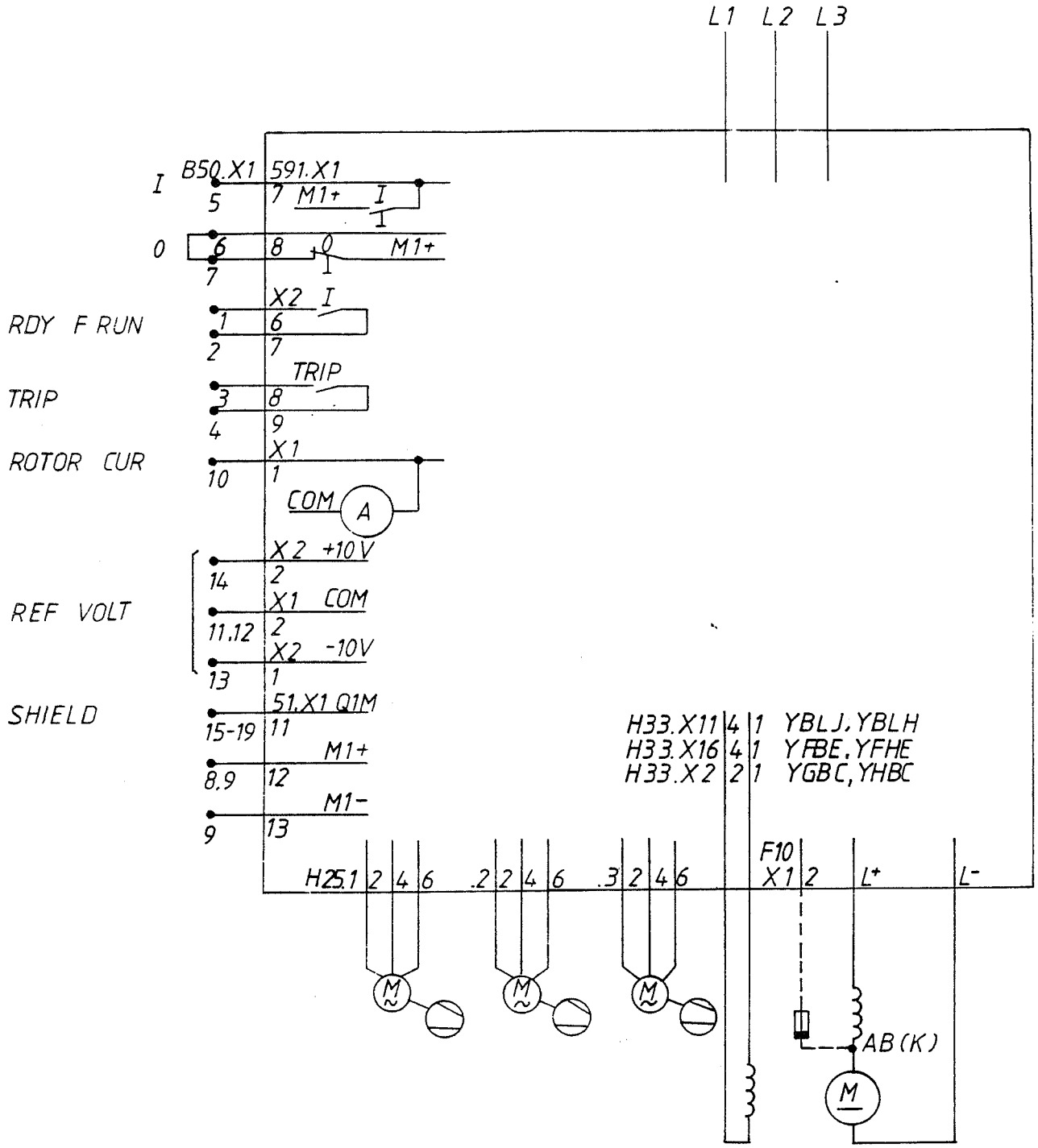


Terminal block B50 is an accessory

Fig. 3-4 Convertors YGML/YHML
650-1400 A, with VSG enclosure

## 4 INSTALLATION OF WIRING

The convertor contains both heavy-current equipment and electronic equipment, and the circuits of the convertor can therefore be divided into two categories: those that cause interference and those that are sensitive to it. The category that causes interference is the mains circuit, and those that are sensitive to interference are the electronic, digital and analog control circuits.

To minimise the risk of interference, wiring that may be sensitive to it should be kept separate from wiring that may cause interference. The two categories of wiring should be at least 100-300 mm apart. Signal cables (-110 V) connected to optocouplers on the control equipment should not be more than about 300 m long.

Electronic signals related to the zero point of the electronic system (references, actual value signals and certain digital signals) must be carried by screened cables. The screen must not be a closed circuit, since this might give rise to inductive currents.

The screen is connected to special terminal blocks in the convertor (B50.X1.15-19).

The cables and wiring must be installed in accordance with modern practice and regulations (standards).

## 5 EARTHING

All equipment and units must be earthed to ensure that they do not take on a dangerous potential in the event of short circuits to earth. Convertors without enclosure may be earthed with a cable.

On the convertor module there is a special earthing screw; on other units the earth cable is connected to one of the fixing holes. In enclosed convertors, all units are connected to the frame via their fixings.

The cubicle frame has an earthing clamp. An earthing line or busbar must run from this earthing clamp to a reliable earthing point. The dimensions of the earthing line must conform to current standards.

The zero line of the electronic system must be earthed. For satisfactory operation it must be earthed via an earthing filter (accessory). The filter is in the form of a 1 kohm resistor
8 connected in parallel with a 10 µF capacitor.

In drives in which several convertors operate together, the zero lines must be earthed at <u>one</u> point only.
This also includes the supply voltage M2 (~110/115 V).

# 6 DIMENSIONS

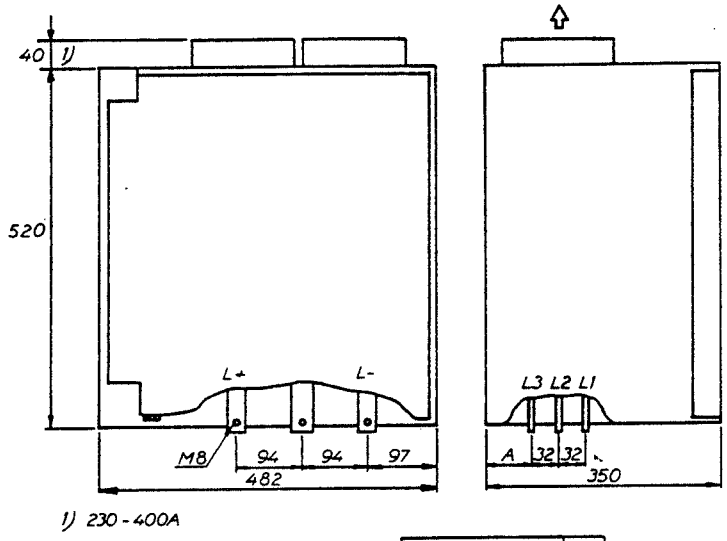


| | A |
|---|---|
| 40A, 90A, 230A | 32 |
| 140A, 400A | 41 |

Fig. 6-1 Convertor module ≤ 400 A

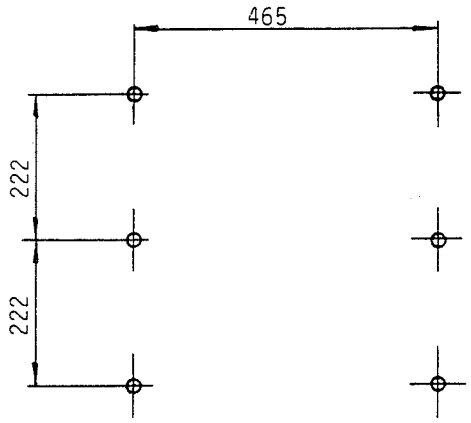


Holes for M6 Screws

Fig. 6-2 Drilling pattern

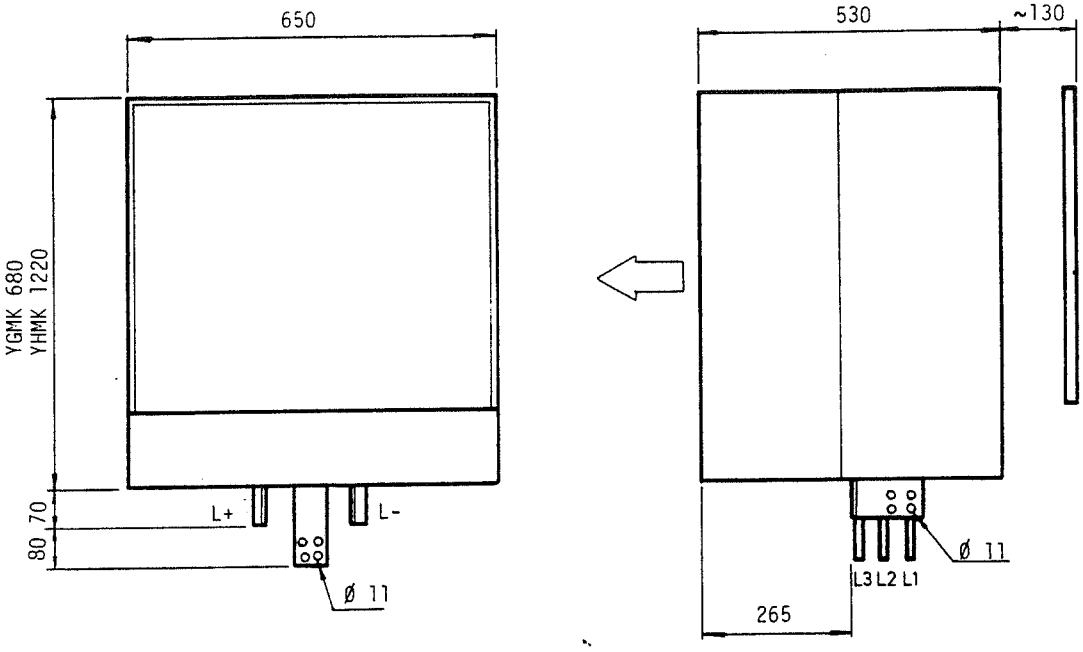


Fig. 6-3 Convertor module 650-1400 A

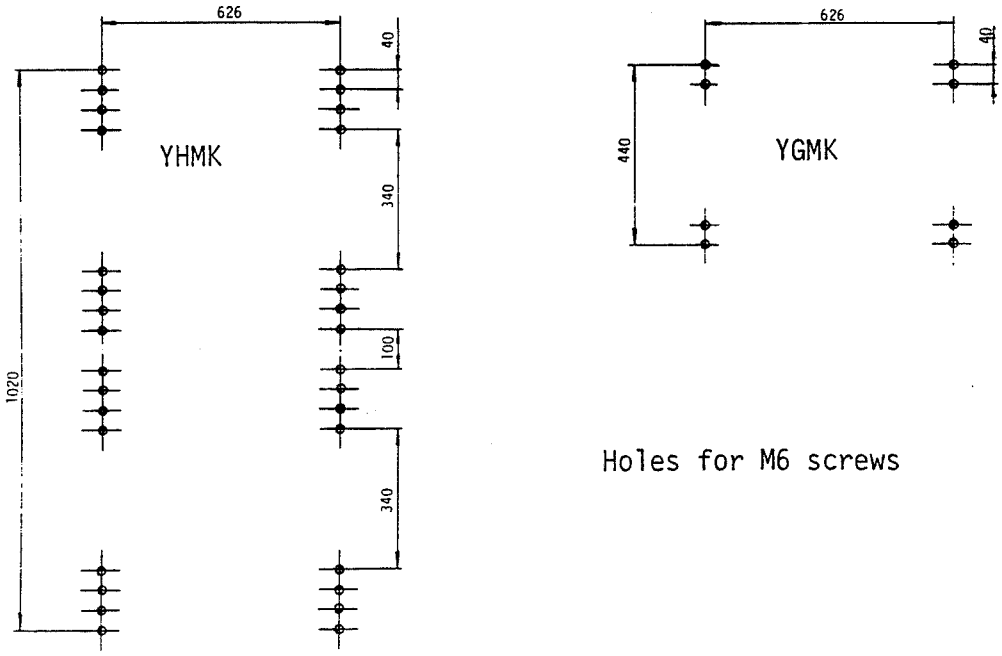


Holes for M6 screws

Fig. 6-4 Drilling pattern

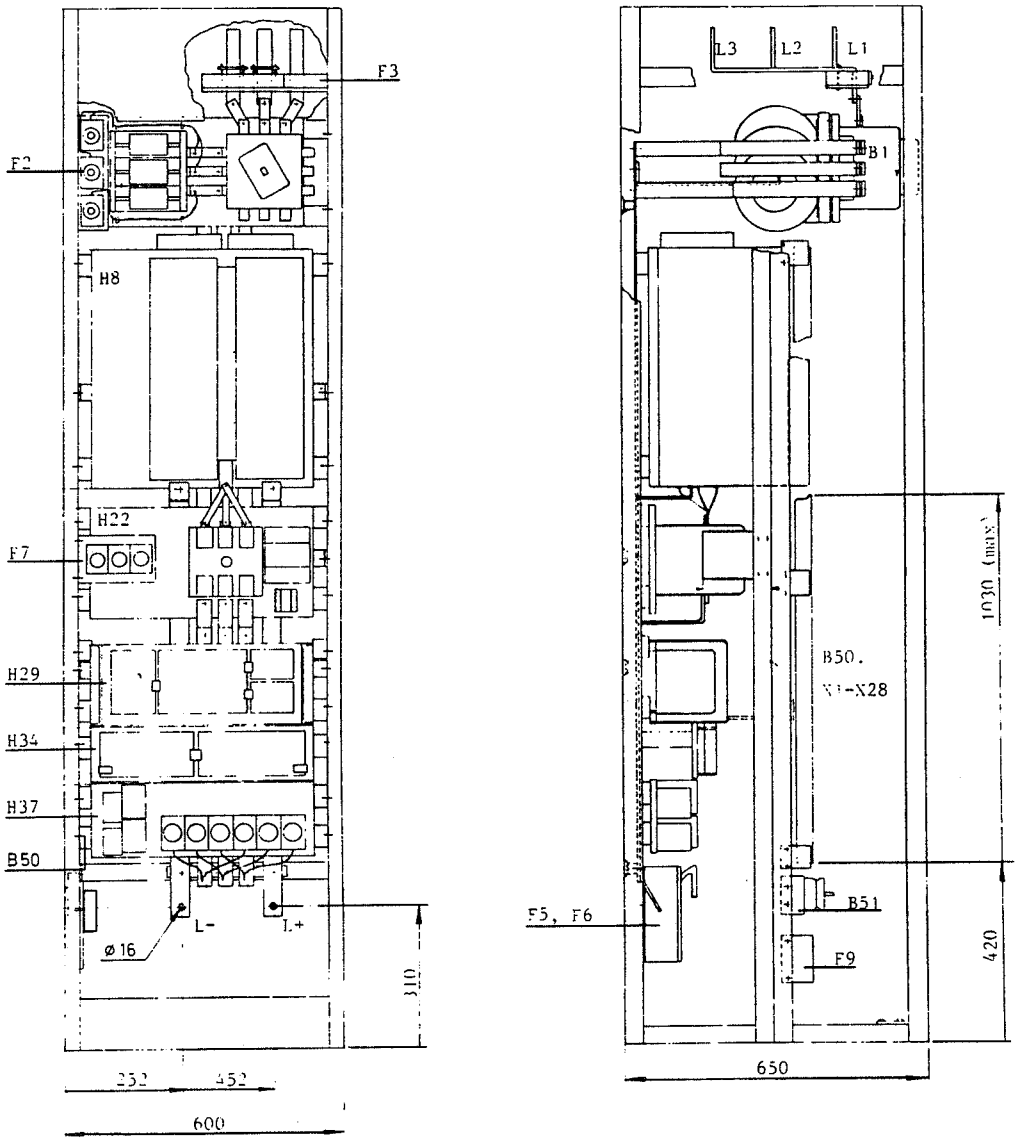


Fig. 6-5 Convertors YGML, YHML 40-400 A

F3 Frame-core transformer for earth fault monitor (-U.TIW)
F2 Auxiliary supply fuses
B1 Load switch unit (-U.W)
H8 Convertor module (-U.AU1, -U.AK, -AK1)
H22 Contactor unit (-U.AQ1)
H29 Field exciter, controlled (-U.AU2)
H34 D.C. voltage measuring unit (-U.PU)
H37 Control unit for external fans (-U.AQ2)
F5, F6 D.c. fuse
B50 Terminal block
B51 Terminal block for sequential event recorder
F7 Field exciter fuse
F9 Earthing filter (-U.Z)

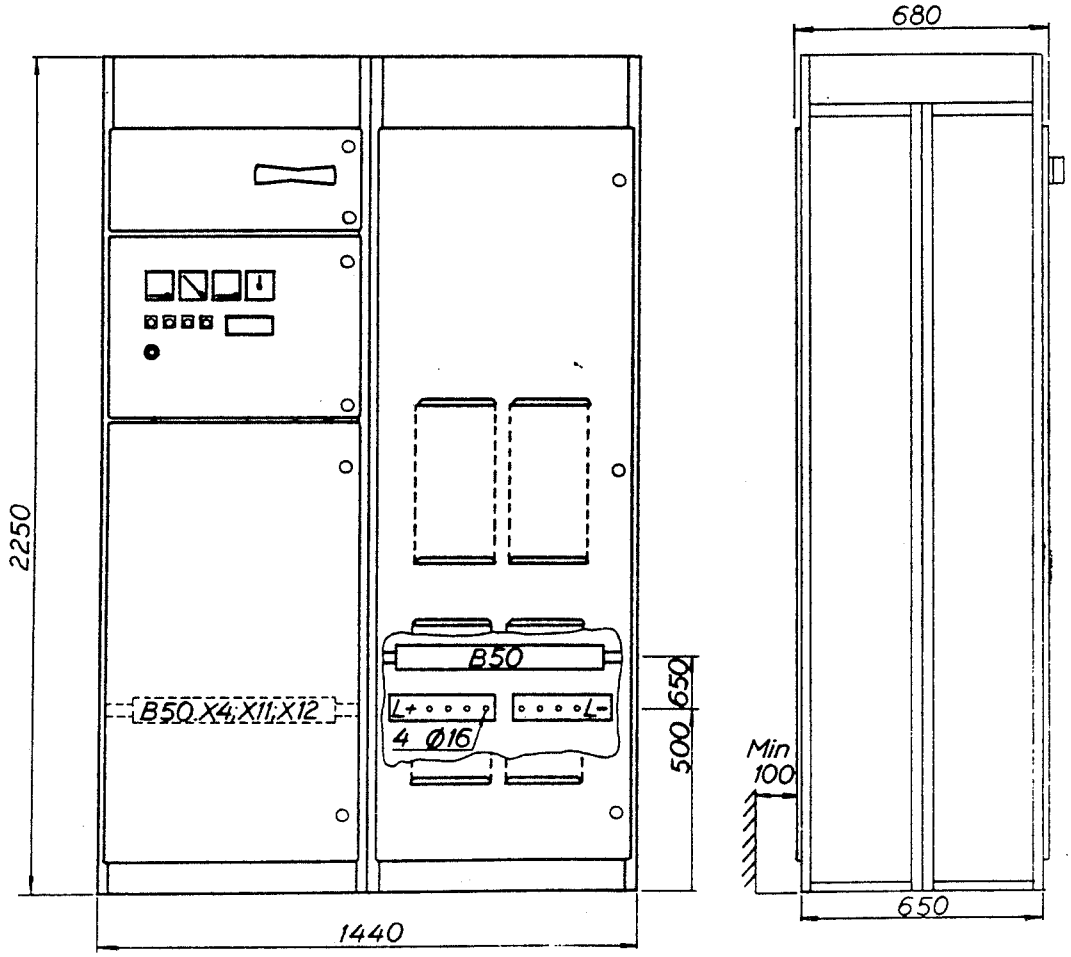


Fig. 6-6 650-1400 A convertor

8

H37
-U.AQ2 Control unit
external fans

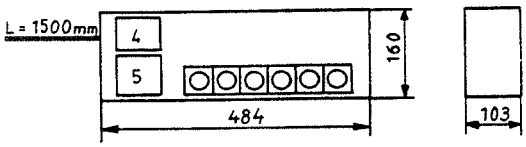


F3
-U.TIW Frame-core
transformer for earth
fault monitor

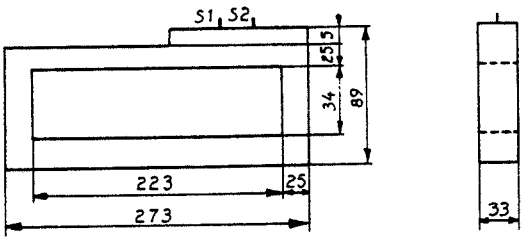


H34
-U.PU D.c. voltage
measuring unit

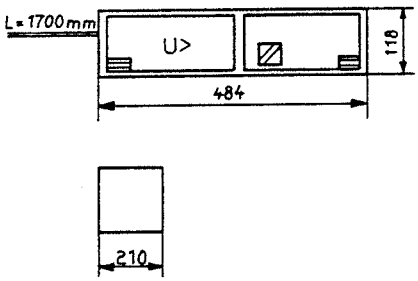


H22
-U.AQ1 Contactor unit

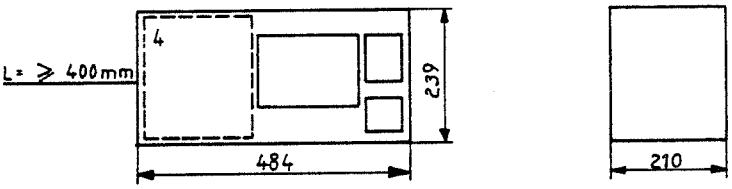


H22.4
-U.AU2 Field exciter, YBLJ,
YBLH, YFBE, YFHE

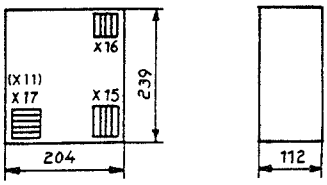


H29
-U.AU2 Field exciter YGBC

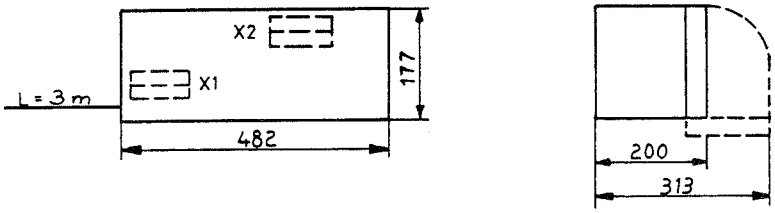


Fig. 6-7 Other units

F1
-L Reactor unit < 400 A

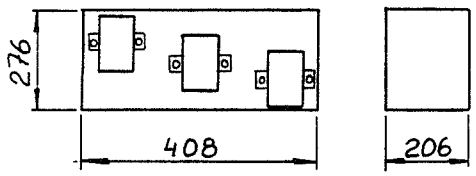


H35
-L Reactor unit 650-1400 A

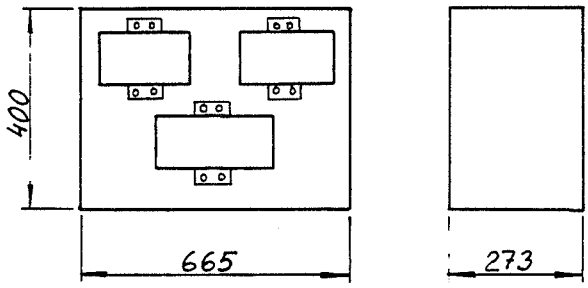


Fig. 6-7 continued. Other units

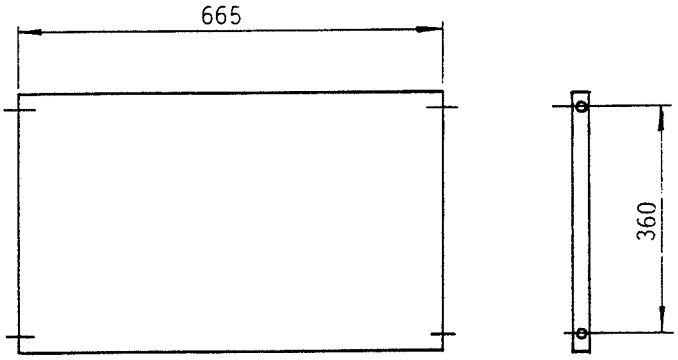


Holes for M6 screws

Fig. 6-8 Reactor unit 650-1400 A

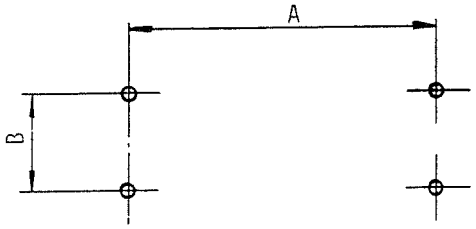


Holes for M6 screws

Fig. 6-9 Drilling pattern

Table of hole spacings

| Units | Hole spacing A | Hole spacing B |
|---|---|---|
| Contactor unit | 465 | 180 |
| Control unit, ext.fans | 465 | 116 |
| D.c. voltage measuring unit | 465 | - |
| Field exciter YGBC | 462 | 102 |
| Field exciter YBLH, YBLJ YFBE, YFHE | 196 | 124,5 |
| Reactor unit ≤ 400 A | 148 | 220 |

8

7
TERMINAL FOR EVENT RECORDER

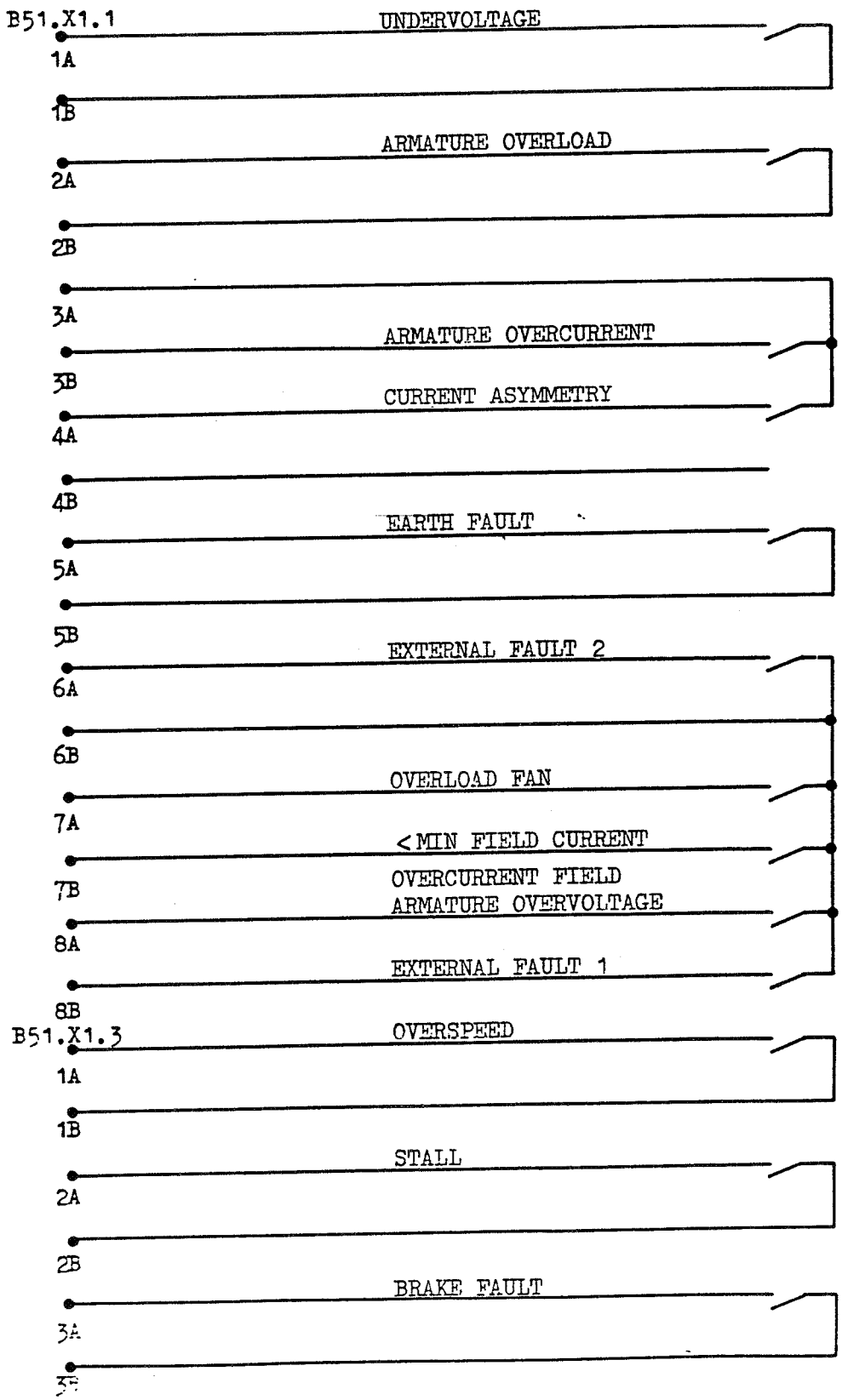

# TYRAK® 8A DC DRIVE SYSTEM

Thyristor convertors YGMK, YHMK, YGML, YHML
Power range 10-2000 kW

Contents | Page



8

## 1 INTRODUCTION

This publication describes the commissioning of the convertor, -U, as shown in Figure 1-1 of YT 280-103 E, speed control and all protection and monitoring functions.

If the convertor has an extensive reference system and master controllers in the drive control equipment, -AK1, the supplementary plant-level commissioning instructions should be followed.

The instructions in this publication are based on the assumptic that the convertor is of the enclosed type, but the commissioning procedure is essentially identical for a convertc without enclosure, and for a convertor module, so that the instructions can be used for these as well.

The numbers in brackets in the section headings identify the circuit diagram sheets that are referred to in the section belc the heading.

Records of commissioning should be kept by noting the set leve and saving recorder charts. If any jumper links are moved or components on solder tags are changed, the circuit diagram must be altered accordingly.

## 2 EQUIPMENT REQUIRED

1 multimeter 0-1000 V a.c. and d.c.,
$R_i \geq 10$ kohm/V d.c., e.g. AVO meter or UNIGOR

For a diode field exciter or an adjustable field exciter it must be possible to measure field current up to 20 A d.c.

4 meter leads with 4 mm banana plugs and reducers (Cat. no. SK 175 2160) for 2 mm terminals

4 meter leads with 4 mm banana plugs and connectors for test points (Cat. no. 2639 0554-1 black, -2 red)

2 interconnection leads with test point connectors (Cat. no. 2639 0554-3)

1 capacitor $\geq$ 2 µF $\geq$ 15 V

1 good-quality potentiometer, 10 kohm, $\geq$ 0.5 W, linear, e.g. ASEA art. no. 5248 2051-510, for reference setting.
There is a suitable potentiometer in test unit YXO 115.

A phase sequence meter capable of withstanding voltages from the mains voltage up to 500 V may also be needed.

The following documents are also required:

Circuit diagram
Apparatus list
List of adjustments (possibly)

For more advanced commissioning work it will also be necessary to have:

1 oscilloscope capable of "line" triggering

1 recorder, 2 channels, high-impedance input

1 stepping unit with potentiometer for basic reference and potentiometer and pushbutton for step reference.
A suitable stepping unit is included in test unit YXO 115.

# 3
# SAFETY PRECAUTIONS

## 3.1
## Risk of injury

To prevent accidents, observe the following rules.

A Do not carry out commissioning work alone.

B Make sure that you and all others involved know how to switch off the electric power supply to the system.

C Tell people working near the machine that it may start without warning. Screen off the machine if possible.

D If the armature of the machine is fitted with mechanical locking, ensure that the locking device is safe (see also Section 3.2 item D).

E Never work on the convertor when it is "live" unless it i absolutely necessary. The auxiliary supplies should be switched off as well.

3.2
Equipment

To prevent damage to the d.c. machine, the convertor or the test equipment, observe the following points.

A Do not use the load switch or the circuit breaker to open the main circuit. Press the "off" pushbutton first.

B Set the protection circuits low at the beginning of commissioning. For example, during adjustment of the armature current control, the overspeed protection and overvoltage protection circuits can be set very low.

C If the d.c. machine cannot be seen or heard by the commissioning engineer it should be kept under observation by someone who can warn the commissioning engineer or switch off the supply if the machine tends to overspeed.

D During adjustment of armature current control and emf measurement compensation, a current is passed through the armature of the d.c. machine with the machine stationary. The field exciter is disconnected for these operations. Normally the initial friction is sufficient to keep the machine stationary, especially if it is a large machine. If overspeeding problems are encountered with small machines, a mechanical locking device can be fitted to the armature. It is important to make the locking device strong so that it does not fail and cause a hazard.

E Do not pass current through a stationary armature for more than 10 s at a time. The current must not exceed the rated value, and the armature should be turned between each operation so that the current is carried by different commutator laminations.

# 4
# COMMISSIONING PROCEDURE

## 4.1
## General, simulation of START 1 (circuit diagram sheets 23, 26, 27,. 31)

Whatever the type of drive, it should be possible to start fiel exciter, control equipment, convertor and speed control in a similar manner. It is therefore a good idea to simulate the START 1 signal if the system includes reference units with START/STOP inputs. It is then not necessary to start the maste control system and reference generating circuit in advance. However, where a mechanical or dynamic brake is fitted, there are advantages in starting the master control equipment in advance.

These commissioning instructions are based on the assumption that START 1 is simulated, and that the entire convertor can therefore be started by pressing the ON pushbutton. If START 1 is not simulated, both the ON-order and the START-order must therefore be given when the instructions state that the ON pushbutton should be pressed.

START 1 is simulated as follows:

1 None of the following units is fitted: YXP 132, YXP 133, YXP 134 or YXZ 143:
START 1 is always "1", no action.

2 YXP 132 fitted, but not YXZ 143:
Remove jumper link 737.S1:13-14

3 YXP 133 is fitted, but not YXZ 143:
Remove jumper link 737.S1:13-14

4 YXP 134 is fitted, but not YXZ 143:
Remove jumper link 737.S1:3-4

5 YXZ 143 is fitted:
Remove YXZ 143. To prevent the convertor tripping, certa jumper links must be fitted:

If YXO 121 is fitted, link 772.S1:5-6.

If YXO 117 is fitted, but not YXO 121, link 766.S1:1-2.

If neither YXO 117 or YXO 121 is fitted,
link 591.S1:15-16.

4.2
Recommended sequence of operations

1 Check connections of d.c. machine; see Section 5.1.

2 If "control unit external fans" is fitted, set the thermal cutouts; see Section 5.2.

3 Carry out certain checks and adjustments with the main circuit switched off; see Section 5.3.

4 Check external fans; see Section 5.4.

5 Start field exciter; see Section 5.5.

6 When gain adaptation unit YXM 142 is fitted, carry out the necessary adjustments; see Section 5.6.

7 Provisionally start the speed control circuit; see Section 5.7.

8 Adjust the armature current control circuit; see Section 5.8.

9 When d.c. voltage transducer YXC 110 is fitted, adjust the compensation; see Section 5.9.

10 Adjust the armature current limiting circuit; see Section 5.10.

11 Adjust the speed control circuit; see Section 5.11.

12 Adjust the automatic field weakening circuit (if fitted); see Section 5.12.

13 Adjust the torque reversal circuit; see Section 5.13.

14 Adjust the protection and monitoring circuits of the convertor; see Section 5.14.

# 5
# FUNCTION-BY-FUNCTION INSTRUCTIONS

## 5.1
## Checking the d.c. machine

If the driven machine is delicate, for instance if it cannot be run in the wrong direction or must only be run at low speed on starting, the coupling between the d.c. machine and the driven machine must be open, but fixed to the relevant shaft extension Check with the user or machine manufacturer. The d.c. machine must be ready to run; in other words it must have been fixed to the foundation and cleaned. Auxiliary systems for cooling and lubrication must have been commissioned. The d.c. machine must be lubricated.

The armature circuit, field circuit and tachogenerator must be connected. Make a special point of checking that the field windings are connected for the correct voltage. If there is a series winding, it must not be opposed.

Check that the brushes are in contact with the commutator.

## 5.2
## Setting thermal cutouts (47)

Thermal releases 4, 5 and 6 on the "control unit external fans (unit H37 or H25) must be set for the rated current of the mot in question. Set the special selector switch for manual or automatic resetting after tripping.

If time relay 7 is fitted, set the delay. The time relay can checked without a supply voltage, and activated by moving a kn from 0 to 1 and keeping it there until a clicking sound is heard.

## 5.3
## Checks and adjustments without power to the main circuit

For the adjustable and the controlled field exciter jumper lin 591.S1:3-4 must be temporarily inserted to prevent tripping fo high field current.

Check with a voltmeter that the mains voltage corresponds to the convertor rated voltage ±10 %. Remove the main fuses and close the load switch. If a circuit breaker is included in the system, this should be switched to the TEST position and the feed exciter fuses H1:1-3 screwed out. Then switch on the load switch for the auxiliary voltage supply.

## 5.3.1
## Checking the phase sequence

The phase sequence can be checked in various ways depending on the circumstances:

Alternative 1 (32)
If the accessory "a.c. voltage monitor YXO 116" is fitted, the convertor will trip as soon as the load switch is closed, if the phase sequence is incorrect. If this happens, interchange two incoming phase connections. To check that

YXO 116 works, if the convertor does not trip, connect 541.X21:5 to 0 V (591.X23:1).

Alternative 2 (41)

Use a separate phase sequence meter. Check that the meter is suitable for the mains voltage in question. Check the phase sequence of the incoming voltage. Where the mains voltage is above 500 V, the phase sequence can be checked after the auxiliary supply transformer, where the level never exceeds 500 V. If the phase sequence is incorrect, interchange two incoming phase connections.

Alternative 3 (37)

Use an oscilloscope. Trigger it on "line" and connect the oscilloscope zero terminal to 0 V (591.X23:1). Check the phase positions of the a.c. voltages at YXT 115; they should be as shown in Figure 5-1.

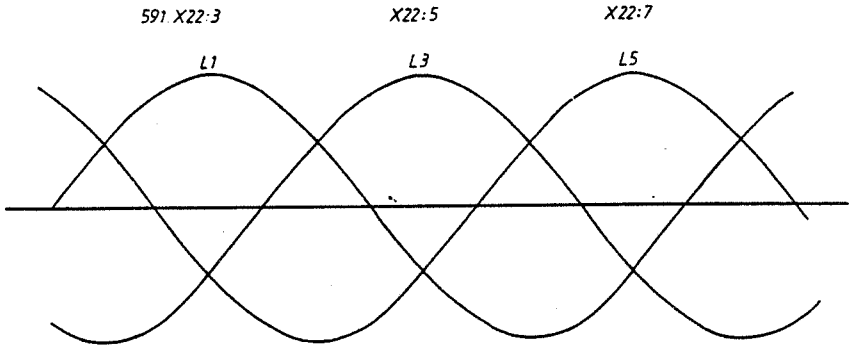


Fig 5-1

If the phase sequence is incorrect, interchange two incoming phases.

Alternative 4

In the current range 650 ≤ $I_{dmNl}$ ≤ 1400 A, an axial fan with a three phase fan motor is used and the direction of the air flow may then indicate the phase sequence.

If the phase sequence is correct, the air flow should be backwards. If the air flows in the wrong direction, interchange two incoming phase connections. Make sure that the connection to the fan motor has not been disconnected after delivery.

Start the fan with the ON pushbutton; the main fuses must still be out.

Adjustable field exciter YFHE must also be connected with the correct phase sequence. If the field exciter is delivered in the same enclosure as the armature convertor, the phase sequence will automatically be correct if the armature convertor is correctly connected. Where the field exciter is not delivered in the same enclosure as the armature convertor, the phase sequence must be checked. Do not carry out this phase sequence check until the field exciter is to be started, as described in Section 5.5.2.

5.3.2
Setting the delay angle (37)

The factory settings are $\alpha_{min}$ = 0 and $\beta_{min}$ = 30 $^{o}$el, unless otherwise stated on the "List of adjustments". Normally there is no need to change these settings, but if adjustment is required, see Description, Section 4.2.1 (YT 280-103 E). $\beta_{min}$ is set for the impedance of the supply, on the basis of a special calculation.

5.3.3
Checking ON/OFF circuits and fan monitor (31)

Press the ON pushbutton and check that the convertor fans start with upward or backward air flow, as the case may be. For convertors with $I_{dmN1} \geqslant 1600$ A, check that the convertor fan rotat in the direction of the arrow on the fan housing. Press the OFF pushbutton and check that the fans stop. Small convertors have no convertor fan; in these cases, check instead that the contactors close in "control unit external fans" (H37 or H25) or that the field exciter contactor closes.

If there are external ON/OFF pushbuttons, check these in the same way. If the field exciter is not required to trip for fan fault, e.g. on dynamic braking, jumper link 591.S2:15-16 must be removed.

Leave the convertor on. Test the fan monitor by pressing a test pushbutton on one of the thermal cutouts on "control unit external fans". The convertor should now trip. If convertor indication unit YXO 122 and a fault indication display are fitted, check fault indication. If "control unit external fans" is not fitted, but there is a convertor fan, fan fault can be simulate by connecting 591.X29:8 to 0 V (591.X23:1).

After these checks, open the load switch and put back the main fuses, or alternatively, switch the circuit breaker to the ON position and screw in the field exciter fuses.

5.4
Checking the external fans (31, 47)

Prevent convertor switch-on by connecting 591.X27:10 to 0 V (591.X23:1). Close the load switch and press the ON pushbutton. Check that the cooling fans of the d.c. machine run in the right direction. Press the OFF pushbutton and remove the connection between 591.X27:10 and 0 V.

5.5
Field exciter commissioning(31)

Connect an external potentiometer or a stepping unit between +10 V (B50.X1:14 or 591.X23:7) and -10 V (B50.X1:13 or 591.X23:8) to produce a variable d.c. voltage. This must remain connected for the entire commissioning procedure.

If test unit YXO 115 is to be used, connect its ribbon cable to 791.X32.

Prevent the main contactor closing by connecting 591.X26:10 to 0 V (501.X23:1). For adjustable and controlled field exciters, remove jumper link 591.S1:3-4.

5.5.1
Diode field exciter (54)
YBLH, YBLJ

Connect an ammeter in the field circuit. If there is no field current reversal unit, the ammeter may be connected between terminals X11:2 and X11:3 on the field exciter.

Press the ON pushbutton and check that the field current and field voltage are correct for the drive equipment. The current must not exceed the rated current of the field exciter when the d.c. machine is warm.

If fine adjustment of the current is necessary, this can only be done with an external series resistor at a supply voltage $\leq$ 500 V. Where the supply voltage is > 500 V, a transformer is fitted, and this permits some adjustment of the field voltage. See the description of the field exciter, YT 280 110 E, Section 1.1.

Check that the convertor is tripped for low field current, by temporarily unscrewing the field exciter fuses. If convertor indication unit YXO 122 and a fault indication display are fitted, check fault indication as well.

If a field current reversal unit is fitted, see also 5.5.3.

5.5.2
Adjustable field exciter (54)
YFBE, YFHE

When the field exciter and the armature convertor are delivered in the same enclosure, the phase sequence will automatically be correct if the armature convertor is connected with the correct phase sequence. If the field exciter is delivered separately, the phase sequence must be checked as follows:

The supply voltage must be switched on, but the convertor must be OFF. Using a voltmeter, check that the field exciter is connected to the same phases as the armature convertor. The voltage must be zero between terminal 1 of the field exciter contactor and phase L1 of the armature convertor (busbar A after load switch), between terminal 3 and phase L2 (busbar B) and between terminal 5 and phase L3 (busbar C).

Connect an ammeter in the field circuit. If there is no field current reversal unit, the ammeter may be connected between terminals X16:2 and X16:3 on the field exciter.

Set potentiometers "$I_F$" to minimum (fully anticlockwise) and "$I_F$>" to maximum (fully clockwise).

NOTE: Do not remove the safety screen when the supply voltage is switched on, since the control and regulating circuit of this field exciter are directly connected to the incoming a.c. supply.

Press the ON pushbutton and coarsely adjust the basic field current with potentiometer "$I_F$". If the convertor trips when the indication level for low field current is passed, turn potentiometer "$I_F$" to a setting slightly above this level, and turn the convertor on again.

Using a voltmeter, check that the field voltage is correct, anc that there is sufficient margin to the maximum output voltage c the field exciter. Note that the resistance in the field winding, and therefore the necessary field voltage, may increas by 40% when the d.c. machine warms up. If the rated current o: the field winding is unknown, a provisional setting of 70% of rated voltage may be used when the machine is cold.

Increase the field current to 105% of basic field current to se the overcurrent tripping level. Note that there is no separate thermal protection for the field circuit, and the overcurrent level should therefore not be set higher than the level that tl field winding, connection cables or field exciter can withstanc

Slowly turn the "$I_F$>" potentiometer anticlockwise until the convertor trips. If convertor indication unit YXO 122 and a fault indication display are fitted, check the fault indicatio

Reduce the field current setting slightly with "$I_F$" to be sure that it is below the overcurrent tripping level. Restart the convertor and slowly reduce the field current until it trips a a fault indication for low field current is obtained (where applicable). Note the current at which the convertor trips (normally 8-20% of field exciter rated current). If current reference unit YXZ 142 is fitted, take care not to allow the field current to be reduced too close to this level.

When using the YXZ 142, remember the hysteresis of the excitation circuit of the DS machine. This results in a higher EMF if the field current is reduced to a certain value than if it is increased to that value.

Finally set the correct base field current.

If a field current reversal unit is fitted, see also 5.5.3.

5.5.3
Field current reversal unit (53, 55)

A field current reversal unit may be fitted together with a diode field exciter and an adjustable field exciter. Check by forced control of the field current reversal unit that the field current can flow in both directions. To do this connect +15 V (2.X23:4) for reverse current direction or -15 V (2.X23:5) for forward current direction to 2.X22:11, or use external control.

Forced control for the forward current direction must be maintained for the subsequent operations.

5.5.4
Controlled field exciter, current control (51, 52)
YGBC, YHBC

Connect a meter for current measurement, either an ammeter connected directly into the field circuit or a voltmeter connected to field current signal 52.X21:6; a 10 V signal corresponds to the rated current of the field exciter.

Check the rated d.c. voltage of the field exciter on the rating plate. If it is greater than the maximum permitted field voltage of the d.c. machine (rated d.c. voltage + permissible degree of forcing), the maximum field exciter voltage must be limited by reducing the limiting level of the current controller. For further details see Chapter 7 of YT 280- 111 E, field exciter description.

On basic field control unit YXT 117, turn the "GAIN", "$I_F$>", "$I_1$" and "$I_2$" potentiometers fully anticlockwise and the "$I_F$>" potentiometer fully clockwise.

If the exciter is equipped with automatic field weakening with emf controller YXR 160, certain adjustments need to be made on the emf controller. Check that jumper links 51.S1:1-2, 3-4, 7-8, 9-10 are fitted. Turn the "LEVEL", "R36" and "LIM 1" potentiometers fully clockwise and the "GAIN" and "PHASE LEAD" potentiometers fully anticlockwise. Connect a voltmeter to 51.X21:3 and adjust with potentiometer "LIM 2" for a voltmeter reading of 0.0 V.

If the function generator YXM 151 is included, check then that the jumper links 52.51:3-4 and 52.53:1-2 are removed.

If speed-controlled field weakening unit YXM 152 is fitted, check that jumper link 51.S1:1-2 is present for d.c. machine type LAB; for other machines this link must be removed. Turn the "GAIN", "SLOPE 1", "SLOPE 2", "SLOPE 3" and "SLOPE 4" potentiometers fully anticlockwise, and turn the "LEVEL" potentiometer fully clockwise.

Check that jumper links 52.S2:1-2 and 3-4 are removed for 50 Hz mains frequency and inserted for 60 Hz mains frequency.

Switch on the convertor and provisionally set the required basic field current with potentiometer "$I_1$" or an external potentiometer. Using a voltmeter, check that the field voltage is correct, and that there is sufficient control margin.

The resistance of the field winding, and therefore the required field voltage, may increase by 40% when the winding warms up. If the rated current of the field winding is unknown, a provisional setting of 70% of rated voltage when cold may be used.

The protection circuits for high field current ("$I_F$>") and low field current ("$I_F$<") must now be adjusted. To avoid passing current through the field winding it is possible to simulate a current signal by connecting a negative voltage to 52.X22:5.

Increase the field current to 5% above basic field current to set the overcurrent tripping level. Turn the "$I_F$>" potentiometer anticlockwise until the convertor trips. When approaching the correct level, turn the potentiometer extremely slowly, since the level discriminator has a built-in delay of about 2 s. If convertor indicator indication unit YXO 122 and fault indication display are fitted, check the fault indication.

Note that there is no separate thermal protection for the field circuit, and the overcurrent level should therefore not be set higher than the level that the field winding, connection cables or field exciter can withstand.

Reduce the field current setting slightly to be sure that it is below the overcurrent tripping level.

Restart the convertor and set a field current corresponding to the low field current tripping level. Normally the level can be about 70% of the lowest service field current (allowing for any field weakening). Turn potentiometer "$I_F$<" slowly clockwise until the convertor trips. If convertor indicator indication unit YXO 122 and a fault indication display are fitted, check the fault indication.

With Opti-Torque duty it is important to bear in mind that there is a flipflop which prevents tripping for low field current when the field current reference is below about 2 V (normal value). This means that "$I_F$<" should be set slightly lower. The blocking level can be changed with resistor R10 on YXN 118, as shown in Figure 8-2 of YT 280 111 E.

Setting "GAIN" with a voltmeter

In the absence of a recorder, and where fast control response is not a primary consideration, the current controller gain can be set with a voltmeter. Connect a voltmeter with a measuring range of about 5 V a.c. in series with a capacitor $\geq$ 2 µF, to current controller output 52.X21:7. Set about half the basic field current and turn the "GAIN" potentiometer clockwise until the voltmeter reads about 1 V.

Setting "GAIN" with a recorder

Connect one channel of the recorder to the current signal 52.X21:6 and the other channel to the current controller output voltage 52.X21:7. Connect a stepping unit (e.g. test unit YXO 115) to an unfiltered reference input 52.X21:5 and set a low negative voltage. If automatic field weakening is used, or for double convertors (YHBC) in an Opti-Torque system, this input is occupied, and must be temporarily disconnected (remove jumper link 52.S3:1-2 or 71.S1:19-20 respectively).

Set about 5% of basic field current, and impose small steps (< 1%) on the reference. Turn "GAIN" clockwise until there is a slight overshoot (< 10% of the relevant current) on the actual value signal. Check that the step is not so great that the current controller limiting circuit comes into operation. Turn back the "GAIN" potentiometer by a factor of about 2 on the scale on the PCB, since the inductance of the field winding is lower at full field current. The adjustment may also be carried out at full field current, but this makes it difficult to see the step on the recorder.

Restore removed jumper links and disconnect the stepping unit.

5.5.5
Controlled field exciter, setting the function generator (51)

When a function generator YXM 151 is fitted, carry out the following settings to simulate the excitation curve of the d.c. machine. The convertor must be off.

Start with jumper link 54.S1:1-2 inserted, and use the "ADJ" potentiometer to adjust the signal level at 54.X21:1 to 10.0 V. Turn the potentiometers "SLOPE 1, 2, 3 and 4" fully anticlockwise. Calculate the voltages for the three break points. The end point of "SLOPE 4" must always be -10.0 V current reference for +10.0 V flux reference at 54.X21:3.

Remove jumper link 54.S1:1-2. Connect a voltage (negative) to 54.X21:4, corresponding to the ø reference at break point 1. Turn the potentiometer "SLOPE 1" clockwise to give the corresponding current reference at 54.X21:5. Increase the voltage at 54.X21:1 to the ø reference at the next break point, and set "SLOPE 2". Set the other two break points in the same way.

Reconnect jumper link 54.S1:1-2.

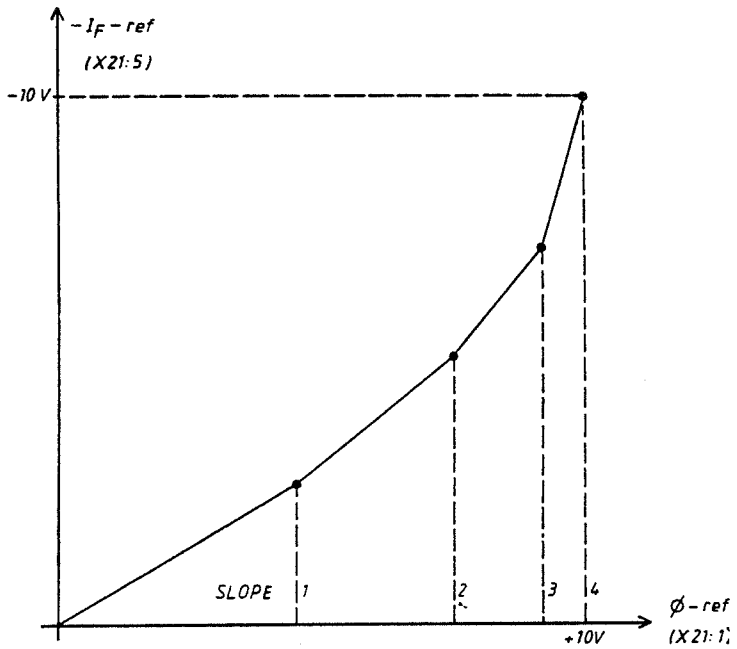


Figure 5-2

5.5.6
Controlled field exciter YGBC, setting the basic field current (52)

For fixed field current or for automatic field weakening witho function generator YXM 151, the basic field current reference set with potentiometer "$I_1$"; jumper links S1:1-2, 3-4 must be inserted. For automatic field weakening above basic speed, th total current reference is reduced by bringing in a reference with the opposite sign (positive) via jumper link S3:1-2.

When function generator YXM 151 is fitted, the reference from the emf controller goes directly to the function generator (52.S3:1-2 removed), for difference generation. The sum curre reference is brought in at 52.X13:8, and potentiometer "$I_1$" is used to set the basic field current in this case as well (52.S1:3-4 removed and 52.S1:1-2 inserted).

5.5.7
Controlled field exciter YHBC, setting basic field current etc. (52, 53)

Check the jumper link settings against the table below; functions A1-B2 have the following meanings:

A1 = field current reversal
A2 = field current reversal with emf controller YXR 160
A3 = field current reversal with emf controller YXR 160 and function generator YXM 151
B1 = Opti-Torque
B2 = Opti-Torque with YXR 160 and YXM 151

| Jumper link | Function A1 | A2 | A3 | B1 | B2 |
|---|---|---|---|---|---|
| 52.S1:1-2 | X | X | X | | |
| 3-4 | X | X | | X | |
| 52.S3:1-2 | (X) | X | | | |
| 71.S1:5-6 | X | X | X | | |
| 7-8 | | | | X | X |
| 11-12 | | | | X | X |
| 13-14 | | | | X | X |
| 15-16 | X | X | X | | |
| 19-20 | | | | X | X |
| 23-24 | | | | X | X |
| 25-26 | X | X | X | | |

Turn the "time lag" potentiometer on YXN 118 fully anticlockwise (zero time lag).

Field current reversal

Switch on the convertor and set the basic field current with potentiometer "$I_1$" on YXT 117.

Check that the field exciter can supply current in both directions under forced control, for example by removing jumper link 71.S1:17-18 and connecting 71.X23:7 to +10 V (52.X22:3) for reverse current direction or to -10 V (52.X22:4) for forward current direction. Leave the forced control connection for forward current direction in position.

Opti-Torque

In this case potentiometer "$I_1$" on YXT 117 is used to give fie current limiting. Before "$I_1$" can be adjusted, a high current reference must be simulated at YXN 118.

Remove jumper link 71.S1:17-18. Connect a variable voltage source (external potentiometer) to 71.X23:7.

Switch on the convertor and set -10 V at 71.X23:7. Turn the "GAIN" potentiometer on YXN 118 fully clockwise. Set the required basic field current with potentiometer "$I_1$" on YXT 11

Reduce the voltage at 71.X23:7 to exactly the armature current reference at which full field current is required to be reache Using the "GAIN" potentiometer on YXN 118, set the level at which the field current begins to drop slightly. Turn the external potentiometer so that the voltage changes sign. Chec that the field current changes direction, and check the limiti level in the new direction.

## 5.6 Adjusting gain adaptation unit YXM 142 (30)

This unit is used to keep the gain of the speed control circui constant. The gain can be controlled in three different ways:

1 Flux adaptation
2 External analog control
3 Gain switching

Check that jumper link S1:3-4 on speed controller YXR 162 is removed.

### 5.6.1 Flux adaptation

Check on YXM 142 that jumper links S1:1-2, S2:3-4 and S2:5-6 a removed and that S2:1-2 is inserted. If the d.c. machine has excitation curve that is relatively close to a straight line (e.g. ASEA type LAB) jumper links S3:1-2, 3-4 and 5-6 must be removed; if not, they must be inserted. The main contactor mu still be interlocked by means of a connection between 591.X26: and 0 V (591.X23:1).

Switch on the convertor. The field exciter must now deliver basic field current, and the field current signal must appear 531.X2:6. Connect a voltmeter to 531.X21:3 and set the voltmeter reading to 10.0 V with potentiometer "G1".

Normally the speed controller gain increase is subject to a maximum of about 100 times at zero field current signal. This factor can be altered by means of R2 (normally 2.2 MΩ).

5.6.2
External analog control

Check on YXM 142 that jumper links S1:1-2, S2:1-2 and S2:5-6 are removed and that S2:3-4 is inserted. If the excitation curve of the d.c. machine is relatively close to a straight line (e.g. ASEA type LAB) jumper links S3:1-2, 3-4 and 5-6 must be removed; otherwise they must be inserted. Check that the external signal (maximum value) is present at 531.X1:6. Connect a voltmeter to 531.X21:3 and set the voltmeter reading to 10.0 V with potentiometer "G1".

For fully linear external control set "G1" for 8.0 V at X21:3 for maximum input signal (jumper links S3:1-2, 3-4, 5-6 inserted).

Normally the speed controller gain increase is subject to a maximum of about 100 times at zero field current signal. This factor can be altered by means of R2 (normally 2.2 MΩ).

5.6.3
Gain switching

Check on YXM 142 that jumper links S2:1-2, 3-4 are removed and that S1:1-2, S2:5-6 are inserted. Four different gains can now be selected via inputs X1:1, 2, 3 and 5. The input signals can be simulated by connecting X21:7, 6, 5 and 4 respectively to 0 V (591.X23:1). Connect a voltmeter to X21:3 and set the voltmeter reading to 10.0 V with potentiometer "G1" when X27:7 is connected to 0 V. This gives the lowest speed controller gain, and is used, for instance, for a load with the lowest moment of inertia.

Then set the other higher gains with "G2", G3" and "G4". For example, if a gain 4 times higher than in the first case is required, set 10/4 = 2.5 V at X21:3.

Gain switching can also be combined with flux adaptation or external analog control. For this, jumper link S2:5-6 is removed and jumper link S2:1-2 or S2:3-4 is inserted.

5.7
Provisional commissioning of speed control circuit (25)

The speed control circuit should be provisionally commissioned at this stage to make sure that the connection to the tachogenerator is working. This makes it easier to monitor the d.c. machine for overspeeding by means of overspeed protection or a voltmeter.

The instructions below are based on the assumption that the speed control circuit uses tachogenerator feedback, but where applicable the instructions can also be used for voltage feedback.

8

5.7.1
Preparations (25)

The convertor must be switched off. Remove the main contactor interlocking (591.X26:10). Make sure that the correct jumper links are inserted on the speed controller. Pay particular attention to the actual value circuit. Jumper link S1:7-8 (YXR 162 and YXR 163) must always be inserted, except with automatic field weakening by means of emf control. On YXR 162, jumper link S1:25-26 should be closed to prevent overshoot afte limiting.

Calculate the tachogenerator voltage at maximum speed by using the equation:

$$U_{max} = k \times n_{max}$$

where k = 0.1 for type BD 2510
0.1 for type TDP 1306
0.06 for type REO 444
0.025 for type TGRB 1-5 A

If the overspeed protection is to be used as runaway protectior during adjustment of the armature current control circuit, wher automatic field weakening is fitted, $n_{max}$ should initially be set equal to base speed (the speed at which field weakening is to become operative).

Cut the strappings in the voltage divider for tachogenerator connection, as stated in the table below.

| Speed controller type | Tachogenerator voltage at max speed (V) | Strapping removed |
|---|---|---|
| YXR 162 | 10 | - |
| | 12.6 - 15.1 | I |
| | 14.3 - 18.5 | H, I |
| | 17.4 - 24.5 | G - I |
| | 22.7 - 35.0 | F - I |
| | 30.4 - 50.1 | E - I |
| | 43.9 - 76.8 | D - I |
| | 68.8 - 126 | C - I |
| | 106 - 199 | B - I |
| | 170 - 324 | A - I |
| YXR 163 | 10 | - |
| | 14.2 - 25 | D |
| | 23 - 57 | C, D |
| | 42 - 126 | B - D |
| | 99 - 338 | A - D |

8

Then set the armature current limit very low (turn potentiometers "LIM 1" and "LIM 2" on the speed controller anticlockwise). Turn the "GAIN" and "SIGN ADJ" potentiometers on the speed controller fully anticlockwise, and on YXR 162 turn the "TIME" and "PHASE LEAD" potentiometers fully anticlockwise. Finally turn the "GAIN" potentiometer on the armature current controller fully anticlockwise. If the convertor is fitted with overspeed monitor YXO 117 and overvoltage monitor YXO 126, set the tripping level on each of these units low (turn potentiometers anticlockwise).

Drive systems with torque reversal must be forcibly controlled to the forward torque direction by whichever of the following methods a) to c) is appropriate.

a) Double convertors YHMK, YHML:
Connect 515.X1:1 to -24 V (591.X23:2). Disable voltage adaptation by removing jumper link 515.S4:1-2.

b) Double field exciter YHBC:
Remove jumper link 71.S1:17-18. Connect 71.X23:7 to -10 V (52.X22:4) (full field current).

c) Field current reversal unit YXG 103:
Connect X22:10 on YXG 103 to -24 V (591:X23:2) or apply external forced control.

Connect a variable d.c. voltage from an external potentiometer to a spare unfiltered reference input on the speed controller.

Set a low positive reference. Connect a recorder or voltmeter to the speed actual value signal (X21:2 on YXR 162, X21:8 on YXR 163).

5.7.2
Checking direction of rotation

If the d.c. machine cannot be seen or heard, position an assistant to warn of runaway of the machine.

Switch on the convertor, but be prepared to press OFF immediately if there is a tendency to run away. If the d.c. machine runs away, the tachogenerator or field winding connections are reversed (when there is any tachogenerator voltage at all).

If there is runaway in the correct direction of rotation, the polarity of the speed signal is wrong. Reverse the tachogenerator connections.

If there is runaway in the wrong direction of rotation, the polarity of the field current is wrong. Reverse the connectior to the field winding.

If the d.c. machine can be controlled continuously with the potentiometer, but rotates in the wrong direction, reverse the connections both to the tachogenerator and to the field windin

If the d.c. machine has a series winding, check that the serie winding is not opposed. Measure the voltages across S1-S2 and F1-F2. S1 and F1 must have the same polarity.

Where overspeed or overvoltage monitors are fitted, check by slowly increasing the speed reference that they can trip the convertor.

Tachogenerator alignment can be checked by using a recorder to record accurately the speed actual value and by checking tn there is no speeed-dependent impressed a.c. voltage.

8

5.7.3
Setting the d.c. voltage transducer

When d.c. voltage transducer YXC 110 is fitted, it must be adjusted. Connect a voltmeter to the voltage input of YXC 110, terminals X1:1 and X1:3. Turn the "COMP 1" and "COMP 2" potentiometers fully anticlockwise. Set the speed to give 100% emf on the voltmeter. The overspeed monitor and overvoltage monitor can temporarily be set high so that the convertor does not trip. The adjustment may be made at a lower voltage, but this gives lower accuracy.

If terminal AB (terminal K) of the d.c. machine is to be used for compensation, check by voltage measurement that the circuit is connected as shown in Figure 5-3.

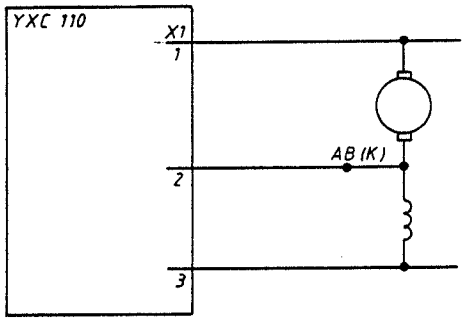


Fig 5-3

The voltage X1:1-X1:3 must be slightly higher than the voltage X1:1-X1:2.

Using the "GAIN" potentiometer, set the voltage at X21:1 to -10.0 V (for positive speed reference and max emf). If the sign is wrong, change it by operating switch S1.

## 5.8
## Adjustment of armature current control circuit

### 5.8.1
### Connection and preliminary adjustment (25, 31, 35)

The armature control circuit must be adjusted with the d.c. machine stationary and the field winding disconnected. For adjustable and controlled field exciters, temporarily insert jumper link 591.S1:3-4 to prevent tripping at high field current.

Connect a voltmeter to the speed reference to check that the machine does not start to rotate.

Make sure the convertor is off, and disconnect the field excit by unscrewing the field exciter fuses. Connect the acknowledgement signal from the field exciter by strapping 591.X23:9 to +10 V (591.X23:7). Leave the external potentiometer connected to an unfiltered input on the speed controller.

Set a low positive voltage. Set the speed controller for P-action by inserting jumper link S1:3-4 on YXR 163 and removi jumper link S2:3-4 on YXR 162.

Provisionally set the current limits "LIM 1" and "LIM 2" on th scale to a level corresponding to the rated current of the d.c machine. The level of the speed controller output signal CUR REF 1-1 is normally such that 5 V corresponds to $I_{dmN1}$. I the rated direct current of the convertor is much greater than that of the d.c. machine, the level of the current reference c be adjusted upwards by reducing actual value resistor R205 (se circuit diagram sheet 35 and Figure 4-2 in YT 280-103 E). Not that the level of the current actual value signal ARM CUR 1 mu not be altered, since this would alter the settings of the overload monitor and would change the ammeter reading.

Switch on the convertor and turn up the reference potentiomete to give rated current for a moment; check that the armature of the d.c. machine remains stationary. Keep the speed monitor voltmeter constantly under observation while adjusting the armature control circuit. If the machine rotates, the armatur must be locked in an appropriate manner. See also Section 3.2 item D.

Remember: Do not allow the current to flow for more than 10 seconds; allow time for cooling, and turn the armature betweer operations.

For correct adjustment of the current control circuit, the current must exceed the continuous current limit (continuous current means that the direct current is always greater than zero). For most d.c. machines this limit is lower than rated current. If it is found during the following procedures that the limit is higher than the rated current of the machine, the current limits "LIM 1" and "LIM 2" must be raised.

If the limit for continuous current is < 10% of $I_{dmN1}$, R194 for the current indication flipflop must be changed to 180 ohm, and if the limit is > 70%, the resistor must be changed to 680 ohm.

5.8.2
Adjusting the gain (35)

Two methods of adjusting the current control circuit are described here, one with a voltmeter and the other with a recorder.
The first method is satisfactory for most drives. To optimise the control system a recorder must be used.

5.8.2.1
Setting the gain with a voltmeter

Establish first the limit for continuous current. Connect a voltmeter (range 15 V d.c. approx.) to the current indication flipflop, 591.X22:9. Increase the current slowly from zero. The voltmeter reading will now change in the negative direction as the current increases. The limit for continuous current is situated at the current where the reading no longer changes (about -13 V). Note the ammeter reading or measure the level of the current signal 591.X24:7.

Connect the voltmeter (range 10 V a.c. approx.) in series with a capacitor ($\geq$ 2 µF) between the current signal (591.X24:7) and 0 V (591.X23:1). Leave the "GAIN" potentiometer on YXT 115 in the minimum position, and set a reference which makes the armature current exceed the continuous current limit by about 20%.

Turn the "GAIN" potentiometer clockwise until the voltmeter reading starts to increase. The current control circuit is now at the self-oscillation limit. Turn back the potentiometer by a factor of 2 on the scale on the PCB. Note that the minimum position is not shown, and that it gives a gain of about 0.2. If self-oscillation cannot be obtained, even with the "GAIN" potentiometer turned to the maximum position, set the potentiometer to 4.

5.8.2.2
Setting the gain with a recorder

Establish first the limit for continuous current. Connect one channel of the recorder (2 V/mm approx.) to the current indication flipflop, 591.X22:9. Slowly increase the current from zero. The recorder reading will now change in the negative direction as the current increases. The continuous current limit is situated at the current at which the negative recorder reading becomes stable (-13 V approx.) without pulses. Note the ammeter reading or measure the current signal 591.X24:7.

Connect one channel of the recorder to the current signal 591.X24:7, and the other channel to the current signal 591.X22:8. A stepping unit such as test unit YXO 115 must now be used to give a variable d.c. voltage. The unit should be connected to an unfiltered input on the speed controller. Leave the "GAIN" potentiometer on YXT 115 in the minimum position.

Using the stepping unit, set a basic reference to give an armature current about 20% above the continuous current limit. Make small step changes in the reference signal (about 0.3 V) 591.X22:8. Turn the "GAIN" potentiometer clockwise until a small overshoot (about 10% of the step magnitude) is obtained the current signal. Unless extremely fast control is needed, the gain should be reduced from this setting by a factor of 2 the "GAIN" scale. Note that the minimum position is not shown and that it gives a gain of about 0.2.

5.8.3
Maximising the rate of change of the armature current (34)

The commutator of a d.c. machine may be damaged if the armatur current changes too rapidly. The maximum permitted rate of change, dI/dt, is specified by the machine manufacturer. The convertor limits dI/dt indirectly by means of limiting circuit in the reference summator (sheet 34 of the circuit diagram). Normally R193 = 150 kohm, giving a dI/dt of max 20 x $I_{dmN1}$ per second.

If the d.c. machine can withstand a higher dI/dt and if rapid control is required, R193 can be altered. See Figs 4-16 and 4 of YT 280-103 E. After changing the resistor, check the resul by instantaneously increasing the current reference from 10% t 100% of rated current, and recording the current signal 591.X24:7 on a recorder.

5.9
Setting the compensation on d.c. voltage transducer YXC 110 (49)

When the d.c. voltage transducer is used for speed control via armature voltage feedback, no compensation must be used. The instructions below are for measurement of the emf of the d.c. machine.

Retain the connections used in Section 5.8, with the field exciter disconnected, the speed controller wired for P-action, and a potentiometer/stepping unit to give an armature current reference.

The emf actual value signal has already been set to 10.0 V for max emf, and the setting of the "GAIN" potentiometer on YXC 1 should therefore not be altered. There are three ways of compensating for the voltage drop in the d.c. machine:

1 Compensation of the static voltage drop via the current actual value signal.
2 Compensation of the static voltage drop via the AB-termina (K-terminal) of the d.c. machine.
3 Compensation of static and dynamic voltage drop.

When the speed is zero the emf is also zero, and the input voltage to the d.c. voltage transducer is made up entirely of the armature voltage drop of the d.c. machine.

Remember: Do not allow the current to flow for more than 10 allow time for cooling and turn the armature between operatio

5.9.1
Compensation of the static voltage drop via the current signal

Connect a voltmeter to the emf signal X21:1 on YXC 110, and set an armature current equal to the rated current of the d.c. machine, for example. Turn the "COMP 2" potentiometer clockwise until the voltmeter reads zero.

Remove jumper link S4:1-2 if the range is not sufficient. On double convertors (YHMK, YHML) temporarily disconnect the forced control to 515.X1:1. Reverse the direction of the armature current and check that the voltmeter reading is still zero. Restore the forced control connection.

5.9.2
Compensating the static voltage drop via the AB-terminal (K-terminal) of the d.c. machine

Connect a voltmeter to the emf signal X21:1 on YXC 110, and set an armature current equal to the rated current of the d.c. machine, for example. Turn the "COMP 1" potentiometer clockwise until the voltmeter reads zero. Remove jumper link S3:1-2 if the range is not sufficient.

N.B. Jumper link S3:1-2 is in the primary circuit of the d.c. voltage transducer. The convertor must therefore be switched off before the safety screen is removed to take out the jumper link.

On double convertors (YHMK, YHML) temporarily disconnect the forced control to 515.X1:1. Reverse the direction of the armature current and check that the voltmeter reading is still zero. Restore the forced control connection.

5.9.3
Compensation of both static and dynamic voltage drop

The static voltage drop is compensated mainly via the armature current signal, and the dynamic voltage drop via the AB-terminal (K-terminal) of the d.c. machine.

Connect one channel of a recorder to the emf signal X21:1 on YXC 110 and the other channel to the current signal 591.X24:7. Apply instantaneous steps to the current reference, e.g. 10-100% of the rated current of the d.c. machine. Turn the "COMP 1" potentiometer clockwise until the dynamic error on the emf signal is zero (and the static error has decreased). The waveform of the emf signal should now be approximately the same as the waveform of the current signal.

Now turn the "COMP 2" potentiometer clockwise to make the static error zero as well.

On double convertors (YHMK, YHML) temporarily disconnect the forced control to 515.X1:1. Apply steps to the opposite-sign reference signal, and check that the emf signal is still zero. Restore the forced control connection.

5.10
Adjusting armature current limiting (25)

With the convertor switched off, connect a variable d.c. volta to a spare unfiltered reference input on the speed controller. Re-connect the integrating circuit on the speed controller by removing jumper link S1:3-4 on YXR 163 and inserting jumper li S2:3-4 on YXR 162.

Calculate the armature current reference voltage at which armature current limiting is required. $I_{dmN1}$ corresponds to 5 if current actual value resistor R205 has not been changed (normally 180 kohm). On YXR 162, turn the "GAIN" potentiometer to 2 to obtain sufficient signal level.

Set a positive speed reference so that the output signal of th speed controller (armature current reference), X23:5 on YXR 16 and X21:6 on YXR 163, is limited in the negative direction. S the required limiting level corresponding to the driving torqu in the forward direction with potentiometer "LIM 2".

Set a negative speed reference so that the output signal of th speed controller is limited in the positive direction.

If the convertor is for one torque direction only, set the limiting level to +0.3 V with potentiometer "LIM 1".

If the convertor is for reversible torque direction, temporari set +0.3 V in this case as well. The final adjustment, corresponding to the braking torque in the forward direction c driving torque in the reverse direction is not made until the adjustment described in Section 5.13.

## 5.11
## Adjusting the speed control circuit

### 5.11.1
### Preparations

The convertor must be switched off (and the load switch must be open). Insert the field exciter fuses and remove the field current acknowledgement connection, 591.X23:9. For an adjustable or controlled field exciter, remove jumper link 591.S1:3-4.

If the d.c. machine armature is locked, remove the locking. If the driven machine has been disconnected from the armature shaft, it may now be connected. However, if the driven machine cannot withstand running at high speeds, it is advisable to leave the coupling of the armature shaft until the overspeed monitor has been set as described in Sections 5.11.2 and 5.11.3.

Check lubrication and oil levels. Note that the driven machine should be under no-load conditions during adjustment of the speed control circuit.

Keep the variable d.c. voltage connected to a spare unfiltered input on the speed controller.

Set a low positive reference and switch on the convertor. Be ready to switch off immediately if the d.c. machine runs away.

Check that the speed is continuously controllable for low positive references.

If the convertor has overvoltage and overspeed monitors, the tripping levels of these must be increased to maximum (potentiometers turned fully clockwise).

5.11.2
Adjustment of voltage dividers for tachogenerator voltage, overvoltage monitor and overspeed monitor

5.11.2.1
Field exciter with constant field current

Voltage divider (25)

Connect a voltmeter to measure the tachogenerator voltage at terminals B50.X25:1-3, or directly to X1:1-3 on the speed controller. Increase the speed reference to maximum (normally 10.0 V) while observing the tachogenerator voltage and the emf (voltmeter on the cubicle door or external voltmeter). Do not exceed maximum speed or maximum emf.

If the emf goes too high, the field current must be reduced, or a lower maximum speed must be accepted. With a diode field exciter and a cold machine, the emf will temporarily be too high. Allow the field winding to warm up before carrying out the check. (If the field current is changed, it may also be necessary to readjust $I_F<$ and $I_F>$; see Section 5.5.)

When the maximum speed reference has been set, use the "SIGN ADJ" potentiometer on the speed controller and adjust the tachogenerator voltage to the maximum value previously calculated in Section 5.7.1. Check that there is sufficient margin for armature voltage drop, in addition to the emf, up to the maximum voltage of the d.c. machine and armature convertor. Normally the static armature voltage drop is 10-60 V at rated current.

If the convertor can deliver a higher voltage than the maximum voltage of the d.c. machine, the convertor voltage $U_d$ should be limited, at least if there is no overvoltage monitor. This is done by limiting current controller output voltage $U_s$ with R192. See Figure 4-14 in YT 280-103 E, and the following equation:

$$U_s = 5.9 \times \frac{U_d}{U_{vN}} \qquad \text{where } U_{vN} = \text{mains voltage}$$

Normally limiting is at +8.7 V and -8.0 V, so that the entire possible control range is used.

Overvoltage monitor (49)

When overvoltage monitor YXO 126 is fitted, it must be adjusted. Turn the speed reference down to zero and temporarily connect two reference inputs in parallel to the external potentiometer

Increase the speed reference to give the required tripping voltage. A suitable setting is about 110% of the highest normally occurring armature voltage. If the convertor trips for overspeed before that, disable the overspeed protection by temporarily inserting jumper link 591.S1:15-16.

Turn the "LEVEL" potentiometer on YXO 126 slowly anticlockwise until the convertor trips. If convertor indication unit YXO 122 and a fault indication display are included, check the fault indication as well.

If jumper link 591.S1:15-16 is inserted, remove it now. If the overspeed monitor is fitted, leave the double reference inputs. If not, disconnect one of them.

Overspeed monitor (27)

If overspeed monitor YXO 117 is fitted, it must be adjusted. Temporarily connect two reference inputs in parallel to the external potentiometer, unless this has already been done.

Increase the speed reference so that the tachogenerator voltage rises to the level at which tripping is required (normally about 10% above maximum operating speed). If overvoltage tripping occurs before that, disable the overvoltage monitor by temporarily inserting jumper link 591.S1:9-10.

Check by measurement on YXO 117, 766.X21:4, that the speed signal is also 10% above maximum operating speed. Turn the "LEVEL" potentiometer on YXO 117 slowly anticlockwise until the convertor is tripped. Check also the fault indication on YXO 117 and the fault indication display if fitted.

If jumper link 591.S1:9-10 is inserted, remove it now. Disconnect one of the reference inputs.

5.11.2.2
Field exciter with automatic field weakening

Voltage divider (25)

If the voltage divider was previously connected for the tachogenerator voltage for a low speed, the coarse adjustment set out in the table in Section 5.7.1 must now be made.

The field current must be reduced in this case to allow maximum speed to be reached. A connection must therefore be made on the field exciter between terminals 52.X1:2 and 52.X1:4. Use the voltmeter on the door or an external voltmeter to measure the emf. Connect a voltmeter to the tachogenerator voltage at terminals B50.X25:1-3 or directly to X1:1-3 on the speed controller.

Increase the speed reference to give full emf. Reduce the fiel current by turning the potentiometer "$I_2$" on YXT 117 clockwise. The emf will now drop, and the drop must be large enough to enable the maximum speed reference (normally 10.0 V) to be give without the maximum emf being exceeded. When this has been set use the "SIGN ADJ" potentiometer on the speed controller to adjust the tachogenerator voltage to a level corresponding to maximum speed, as already calculated in Section 5.7.1.

If the convertor can deliver a higher voltage than the maximum voltage of the d.c. machine, the convertor voltage $U_d$ should be limited, at least if there is no overvoltage monitor. This is done by limiting current controller output voltage $U_s$ with R192 See Figure 4-14 in YT 280-103 E, and the following equation:

$$U_s = 5.9 \times \frac{U_d}{U_{vN}} \qquad \text{where } U_{vN} = \text{mains voltage}$$

Normally limiting is at +8.7 V and -8.0 V, so that the entire possible control range is used.

If an overvoltage monitor or an overspeed monitor is fitted, keep the above adjustment. Otherwise go on to "Reinstatement".

Overvoltage monitor (49)

When overvoltage monitor YXO 126 is fitted, it must be adjustec To prevent field weakening, temporarily remove jumper link 52.S3:1-2 on the field exciter or, if function generator YXM 1[illegible] is fitted, jumper link 54.S1:3-4.

Apply the maximum speed reference; see the section headed "Voltage divider". Turn the potentiometer "$I_2$" on YXT 117 anticlockwise to give the required tripping voltage. A suitab[illegible] setting is about 110% of the highest normally occurring armatu[illegible] voltage.

Turn the "LEVEL" potentiometer on YXO 126 slowly anticlockwise until the convertor is tripped. If convertor indication unit YXO 122 and a fault indication display are fitted, check the fault indication.

If an overspeed monitor is fitted, keep the above adjustment. Otherwise go on to "Reinstatement".

Overspeed monitor (27)

If overspeed monitor YXO 117 is fitted, it must be adjusted. Turn down the speed reference to zero and temporarily connect two reference inputs in parallel to the external potentiometer. Reduce the field current slightly by turning potentiometer "$I_2$" on YXT 117 clockwise so that the emf does not go too high when the speed increases. Increase the speed reference so that the tachogenerator voltage rises to the level at which tripping is required (normally about 10% above maximum operating speed).

Check by measurement on YXO 117, 766.X21:4, that the speed signal is also 10% above maximum operating speed. Turn the "LEVEL" potentiometer on YXO 117 slowly anticlockwise until the convertor trips. Check the fault indication on YXO 117, and on the fault indication display if fitted.

Reinstatement (52)

Switch off the convertor and turn the "$I_2$" potentiometer on YXT 117 fully anticlockwise. Remove the connection 52.X1:2-52.X1:4.

If jumper link 52.S3:1-2 or 54.S1:3-4 has been removed, insert it.

If double reference inputs have been used, disconnect one of them.

5.11.3
Adjusting the speed control circuit with a voltmeter (25)

This method is satisfactory where the control performance requirements are not particularly strict. A chart recorder must be used if there are strict requirements; see Sections 5.11.4 and, where applicable, 5.11.5.

The speed control circuit is always adjusted at a level below base speed. With automatic field weakening it is important not to give such a high reference that the maximum armature voltage is exceeded, since the field weakening circuit has not yet been adjusted. Connect a voltmeter (range about 10 V d.c.) to the armature current reference 747.X23:5 for YXR 162 or 750.X21:6 for YXR 163 (speed controller output signal).

Proportional gain

Set a speed reference that gives about 70% of base speed. The voltmeter should now give a low, stable negative voltage reading.

Turn the "GAIN" potentiometer on the speed controller clockwise until the pointer begins to hunt. The speed control circuit is now self-oscillating because the gain is too high. Turn back "GAIN" by a factor of 4 on the scale of the PCB.

Integration time

On YXR 162 the integration time can be set with the "TIME" potentiometer; on YXR 163 capacitors C14 and C15 must be changed. In most cases there is no need to adjust the integration time; the response speed obtained by adjusting the proportional gain is usually sufficient.

The procedure for setting the integration time is the same as for adjusting "GAIN". On YXR 162 the "TIME" potentiometer is turned clockwise, and YXR 163 the capacitance of C14, C15 is reduced, until the pointer begins to hunt. At his point, increase the integration time by a factor of 4.

Check the commutation of the d.c. machine for a rapid speed change from 60 to 70% of base speed. There should be no excessive sparking. The commutation characteristics are described in OK 00-108 E.

5.11.4
Adjusting the speed control circuit with a recorder (normal control response) (25)

A stepping unit such as test unit YXO 115 must be used as a variable d.c. voltage source. The connection to the spare unfiltered input on the speed controller must be kept. Connect one channel of the recorder to the current signal 591.X24:7, and the other channel to the speed signal X21:2 on YXR 162, X21:8 on YXR 163.

The speed control circuit is always adjusted at a level below base speed. With automatic field weakening it is important not to give such a high reference that the maximum armature voltage is exceeded, since the field weakening circuit has not yet been adjusted.

Set a basic reference of about 20% of base speed. Apply steps of about 0.5-3% of base speed. Check continuously that the current limiting level is not reached.

Proportional gain

For each step test, turn the "GAIN" potentiometer clockwise by factor of about 2 on the scale on the PCB. This will bring the speed signal up to the correct level more quickly. The gain is correctly adjusted when there is an overshoot of about 5% of the step.

Integration time



On YXR 162 the integration time can be set with the "TIME" potentiometer; on YXR 163 capacitors C14 and C15 must be changed. In most cases there is no need to adjust the integration time; the response speed obtained by adjusting the proportional gain is usually sufficient.

Apply steps as above, and reduce the integration time by a factor of 2. On YXR 162 turn the "TIME" potentiometer clockwise, and on YXR 163 halve the capacitance of C14, C15. Continue reducing the integration time until there is a distinct change in the step response. Then increase the time by a factor of 2.

Check the commutation of the d.c. machine for large step speed changes (about 10% of base speed). There should be no excessive sparking. The commutation characteristics are described in OK 00-108 E.

Note that when the current reference changes sign, for double convertors YHMK, YHML and for reversable field current direction, the final adjustment cannot be made until any armature shaft locking has been removed, and the adjustments described in Section 5.13 have been made.

5.11.5
Adjustment of the speed control circuit in systems with a fast control response

A recorder must be used. This method is particularly well suited for drives in which rapid response to load disturbances is required.

If speed controller type YXR 163 is used, first disconnect resistor R40.

Adjust the proportional gain to 5-10% overshoot; see Section 5.11.4. Then adjust the integration time to increase the overshoot to 30-50%.

Now reduce the overshoot by introducing a derivative function into the actual value circuit. On YXR 162 this is done by turning the "PHASE LEAD" potentiometer clockwise. YXR 163 has a certain amount of derivative function in its standard form; this is determined by R40. Connect R40 and then increase the derivative function by reducing the resistance of R40.

The result should be as follows:
Rise time 50-100 ms, normally 100 ms.
Overshoot normally less than 5%.

## 5.12
## Adjustment of automatic field weakening

### 5.12.1
### Speed controlled field weakening (51, 52)

If the excitation curve of the d.c. machine is relatively straight (e.g. ASEA type LAB) jumper link S1:1-2 on YXM 152 mus be inserted; if not, it must be removed.

Carry out an initial adjustment to standardise to the set field current. Have the convertor switched on, and run the machine a a speed below base speed. Measure the set field current reference at X21:10 on YXT 117 with a voltmeter, and note the reading.

Switch off the convertor and connect -10 V (52.X22:4) to 51.X21:2. Connect the voltmeter to 51.X21:5 and set the voltmeter reading to +10.0 V with the "SLOPE 4" potentiometer. Move the voltmeter connection to 52.X21:5, and, using the "LEVEL" potentiometer, set the voltmeter to the voltage previously noted for the current reference. Remove the connection to 51.X21:2 and turn "SLOPE 4" fully anticlockwise.

This type of field weakening gives a larger control error than conventional emf control. This must be borne in mind when selecting 100% emf level, so that the maximum permitted armatu voltage of the d.c. machine is not exceeded.

Switch on the convertor and increase the speed so that the emf rises to 100%. Use the voltmeter in the cubicle door, or an external voltmeter. Turn the "GAIN" potentiometer on YXM 152 clockwise to reduced the emf to 98%.

Slowly increase the speed reference. It is important always t increase the speed, <u>and never to reduce it at any time during the following adjustment</u>. If the potentiometer is turned too far at any time, the procedure must be re-started from the beginning.

The emf will now rise slightly to begin with, and then drop. When it has dropped to about 90%, stop increasing the speed an turn the "SLOPE 1" potentiometer slowly clockwise to bring the emf up to about 95% again.

Increase the speed reference again until the emf has been reduced to 90%. Turn "SLOPE 2" to bring the emf back up to 95

Repeat this procedure with "SLOPE 3" and "SLOPE 4" until the required maximum speed is reached. If the emf is considerably below 95% at this point (which may happen if the field weakeni is severe), "SLOPE 1-4" will have to be re-adjusted from the beginning, and a lower minimum emf value will have to be used, for instance 85% instead of 90%.

Then run slowly through the entire speed range, increasing and decreasing the speed and checking the emf level. The variation should remain within the range 5-10%. The emf will always be higher during speed increase than during speed reduction, owing to the hysteresis of the excitation circuit of the d.c. machine.

If there are fast accelerations in normal service, the emf should be investigated with a recorder while the d.c. machine is accelerated with the fastest ramp reference function used. If the overshoot is excessive on transition to the weakened-field region, the emf level must be reduced.

5.12.2
Field weakening by emf control (51, 52)

During these adjustments the emf must be set to a low level. Set a speed reference to give an emf of 85%. Use the voltmeter on the door or an external voltmeter to measure the emf. Turn potentiometer "R36" on the emf controller YXR 160 anticlockwise until the emf drops to 80%. Increase the speed reference slowly until maximum speed is reached. Check that the emf remains constantly at 80%.

A recorder is needed for adjustment of the emf control circuit. Connect one channel to the emf signal 51.X21:1, and the other to the field current signal 52.X21:6. Set the speed to about 80% of maximum. Connect a stepping device set to 0 V, preferably to 51.X21:9, to apply steps to the emf reference. Apply steps equivalent to an emf change of about 5%. Increase the gain of the emf control circuit with the "GAIN" potentiometer until an overshoot appears on the emf signal. Then turn back "GAIN" by a factor of about 2 on the scale on the PCB.

It is not normally necessary to adjust the integration time, but if very fast control is required, the effect of reducing capacitor C14 may be tried.

Check the result by making step changes in the speed reference and studying the emf signal. The disturbances on the emf signal should be as small as possible. In addition, check the emf signal on acceleration with the fastest ramp reference function used or, where applicable, with the speed controller at current limit. Pay particular attention to the weakened field region, to ensure that the overshoot does not become excessive. It should not exceed about 5%, and can be reduced by introducing a derivation function on the emf signal. The emf controller will then start to reduce the field current slightly before the set emf level is reached. To increase the derivation function, turn the "PHASE LEAD" potentiometer clockwise.

When adjustment is complete, disconnect the stepping unit from 51.X21:9. Set maximum speed and turn the emf up to 100% with potentiometer "R36".

## 5.13
## Settings with reversible torque direction

### 5.13.1
### Double convertors in the armature circuit (YHMK, YHML) (25, 35, 36)

Remove the connection for forced control 515-X1:1, and set the "LIM 1" potentiometer as described in Section 5.10. Run the d.c. machine over the entire speed range and check that the machine is retarded when the speed reference is reduced. Where applicable, check that the ammeter gives a reading in both directions, for driving and for braking.

Normally it is not necessary to discharge the integration capacitor on the speed controller on reversal, but if the transition to high torque in the opposite direction is required to be quick, insert jumper link 747.S2:9-10 on YXR 162, or 750.S1:1-2 on YXR 163.

Voltage adaptation

At an earlier stage in the commissioning procedure the voltage adaptation circuit of the current controller was disabled by removing jumper link 515.S4:1-2 on YXN 116. If current reversa is not required to be particularly quick, the jumper link can l left out, and there is therefore no need to adjust the voltage adaptation circuit. Note that the jumper link must be removed for speed controlled field weakening. This is because the inpu signal in this case is the speed signal, and this is not proportional to the emf over the entire range.

If the input signal (515.X22:5) is 10 V for max emf (speed), i must be adapted with resistor R65 on YXN 116. R65 may be selected with reference to Figure 4-18 in YT 280-103 E. When changing the resistor, note that the voltage at 515.X22:1 is 6 V approx. for max emf. Where max emf is lower than the rated d.c. voltage $U_{dN}$ of the convertor, the value of R65 must be reduced by the factor max emf/$U_{dN}$. In this case the voltage a 515.X22:1 will be correspondingly lower.

Reduce the speed to near zero and insert jumper link 515.S4:1- Connect one channel of a recorder to the current signal 591.X24:7, and the other channel to the current controller output 591.X22:1. Check that the "HYST" and "MATCH LEVEL" potentiometers on YXN 116 are turned fully anticlockwise. Run the d.c. machine at a low speed first, and apply small steps t the speed reference. The steps must be as small as possible, but large enough to give current reversal.

The current controller is driven towards its negative limit at each reversal, and is then forcibly controlled up towards the intervention level by the voltage adaptation circuits. Check that there are no large current surges on release in either of the two current directions.

Increase the speed to give max emf, and check the current surges in the same way. Reduce the distance to the intervention level by turning "MATCH LEVEL" clockwise. The adjustment is correct when the current after release is extremely low. Check both directions.

Hysteresis

If current reversal is not required for a small sign change in the current reference, the sensitivity can be reduced by increasing the hysteresis of the reversal flipflop on blocking unit YXN 116. To do this, turn the "HYST" potentiometer clockwise relative to the scale on the PCB.

If a fast control response is required, the speed control circuit should be adjusted as described in Sections 5.11.4-5. Even if the control response requirements are not particularly strict, it is advisable at least to check that there is no hunting on the current reference, as mentioned in Section 5.11.3.

5.13.2
Field current reversal (25, 53)

The field current reversal unit may be fitted together with a diode field exciter or an adjustable field exciter. The direction of the field current is controlled by the sign of the armature current reference, unless forced control is used.

When speed controller YXR 162 is used, the integration value is automatically maintained during reversal. Jumper links 747.S2:9-10 should normally be open.

Speed controller YXR 163, jumper link 750.S1:1-2 should normally be inserted, to ensure that the integration capacitor is not excessively charged during field current reversal.

Remove the strapping to X22:10 on YXG 103. If the armature current reference is being used for control, set the "LIM 1" potentiometer as described in Section 5.10. Make changes in the speed reference and check that the reversal times are reasonable (0.5-3 s) by measuring the phase advance signal from the field exciter (591.X24:9).

If a fast control response is required, the speed control circuit should be adjusted as described in Sections 5.11.4-5. Even if the control response requirements are not particularly strict, it is advisable at least to check that there is no hunting on the current reference, as mentioned in Section 5.11.3.

If reversal is not required for a small sign change in the armature current reference, the sensitivity can be reduced by increasing the hysteresis the reversal flipflop on YXG 103. To do this, turn the "HYST" potentiometer clockwise relative to the scale on the PCB.

5.13.3
Double convertors in the field circuit (YHBC) (25, 53)

Blocking unit YXO 118 can be wired either for "Field reversal" or for "Opti-Torque". Remove the strapping to 71.X23:7 and insert jumper link 71.S1:17-18.

With armature current reference control, set the "LIM 1" potentiometer as described in Section 5.10.

Field reversal

The direction of the field current is determined by the sign o the armature current reference, unless forced control is used.

When speed controller YXR 162 is used, the integration value i automatically maintained during reversal. Jumper links 747.S2:9-10 should normally be open. Speed controller YXR 163 jumper link 750.S1:1-2 should normally be inserted, to ensure that the integration capacitor is not excessively charged duri field current reversal.

If the armature current reference is being used for control, m changes in the speed reference and check that the reversal tim are reasonable (0.5-3 s) by measuring the phase advance signal from the field exciter (591.X24:9) or the field current signal

If a fast control response is required, the speed control circuit should be adjusted as described in Sections 5.11.4-5. Even if the control response requirements are not particularly strict, it is advisable at least to check that there is no hunting on the current reference, as mentioned in Section 5.11.3.

If reversal is not required for a small sign change in the armature current reference, the sensitivity can be reduced by increasing the hysteresis of the reversal flipflop on YXO 118. To do this, turn the "HYST" potentiometer clockwise relative t the scale on the PCB.

Opti-Torque

Jumper link 747.S2:9-10 on speed controller YXR 162 should normally be removed, but it is important that jumper link 747.S1:25-26 is inserted, since the controller output signal i limited for long periods when the Opti-Torque system is used.

8 Check that control is possible over the entire speed range. Measure the speed signal and armature current reference with a recorder, and apply small and large steps to the speed reference. Check the control response. If necessary, readjus the speed control circuit; see Sections 5.11.4-5.
It is of particular importance with Opti-torque drift that the speed of the armature current control be so high that the control voltage can take effect when the EMF changes.

A d.c. machine has a time-constant from field current to flux, known as the eddy-current time-constant. When the direction of torque is reversed at a particular speed by reversing the direction of field current, the machine will be driven with a torque of the wrong sign until the flux has also changed sign. The effect of this is that the speed increase during an acceleration continues after the field current has changed sign and full armature current has been reached. To prevent this it is possible to delay release of the armature current controller by turning the "TIME LAG" potentiometer on YXN 118 clockwise.

Accelerate and retard the d.c. machine and use a recorder to study the speed signal and armature current reference.

## 5.14
## Setting and testing protection and monitoring functions

The following functions must, if fitted, already have been adjusted and tested:

| | Symbol | Section |
|---|---|---|
| Phase sequence monitor YXO 116 | Y↷ | 5.3.1 |
| Fan monitor | ⊚ ⊦ | 5.3.3 |
| Low field current protection | ⊞I< | 5.5 |
| High field current protection | ⊞I> | 5.5 |
| Armature overvoltage monitor YXO 126 | ⊖U> | 5.11.2 |
| Overspeed monitor YXO 117 | ⊖n> | 5.11.2 |

### 5.14.1
### Monitoring the mains voltage, YXO 116, ~U< (32)

The convertor must be switched on.

Turn the "LEVEL" potentiometer on YXO 116 fully clockwise. The convertor should now be tripped, unless the voltage of the supply system is extremely high. If so, 541.X21:10 may be connected to 0 V (591.X23:1).

In addition, check the fault indication on YXO 116 and on the fault indication display if fitted.

Set the required tripping level on the scale on the PCB (normally 80%).

5.14.2
Monitoring the armature current level, YXO 119, Ⓜ I> (32)

The convertor must be switched off.

Simulate a current actual value signal (negative voltage) by connecting a variable d.c. voltage from an external potentiometer to 591.X24:2. Normally the tripping level is set in about 15% above the current reference limiting level set in Section 5.10. If R205 on YXT 115 has not been changed to adjus the scale factor of the reference, the current actual value $U_{Iact}$ can be calculated from the following equation:

$$U_{Iact} = \frac{U_{Iref} \times 1.15}{2} \qquad (V)$$

where $U_{Iref}$ is the current reference limiting level.

Connect a voltmeter to the current actual value signal 591.X24: and use the external potentiometer to set a voltage such that the voltmeter reading is the calculated voltage $U_{Iact}$ (positive). Turn potentiometer "$I_d/I_{dmN1}$" on YXO 119 slowly anticlockwise until the convertor is tripped. In addition, check the fault indication on YXO 119 and on the fault indication display if fitted.

5.14.3
Monitoring of pulsations on the armature current, YXO 119, Ⓜ $I_n$> (32)

The convertor must be switched off.

Simulate a fault by connecting 556.X21:8 to 0 V (591.X23:1). Check the fault indication on YXO 116 and on the fault indication display if fitted.

5.14.4.1
Overload protection, YXO 124, Ⓜ ⚡ (34)

The convertor must be switched off.

The protection must be set for whichever of the following drive system components has the lowest rated current $I_d$: d.c. machine d.c. cables or convertor. The factory setting is the convertor rated current, and this generally means that the mains connection equipment of the convertor (main contactor, load switch etc.) are the items that decide the current rating. See rating plate.

The procedure for setting the overload protection is as follows

8 Select tripping curve a, b or c (see Section 4.4.4 of YT 280-103 E) and insert the appropriate jumper link.

Curve a S1:1-2
Curve b S1:3-4
Curve c S1:5-6

Remove jumper link 548.S2:1-2. Simulate a current actual value signal (negative voltge) by connecting a variable d.c. voltage from an external potentiometer to 591.X24:2. Calculate the current actual value $U_I$ as follows:

$$U_I = 2.5 \times \frac{I_d \times 1.05}{I_{dmN1}} \quad (V)$$

where $I_d$ = the current for which a setting is required, e.g. the rated current of the d.c. machine

$I_{dmN1}$ = the nominal rated current of the thyristor unit; see type designation (e.g. YGML 470-140 A)

Connect a voltmeter to the current actual value signal 591.X24:7 and use the external potentiometer to set a voltage such that the voltmeter reading shows the calculated voltage $U_I$ (positive). Transfer the voltmeter to 548.X21:1 and adjust the voltmeter reading to -6.0 V with the "$I_d/I_{dmN1}$" potentiomter on YXO 124. Insert jumper link 548.S2:1-2 and balance out this voltage with the "BAL" potentiometer, so that the voltmeter reads 0.0 V.

Increase the simulated current actual value signal by a factor of about 2. The protection should now operate within 2 seconds to 1 minute. The time depends on which tripping curve is selected, and the amount of "warming-up" during adjustment. Check the fault indication on YXO 124, and on the fault indication display if fitted.

Tripping and fault indication should be checked, even if the original setting is retained. At the very least a fault should be simulated by connecting 548.X21:3 to 0 V.

5.14.4.2
Overload protection, RVAB, (M) (43)

When overload protection of RVAB type is included in the installation, YXO 124 is removed and its jumper link 591.S1:13-14 is inserted. The tripping signal from RVAB is connected via the indication unit convertor YXO 122. If the signal is connected via 571.X1:5, jumper whereas if 571.X1:7 is used, jumper link 571.S1:7-8 is to be inserted.

The RVAB unit is to be set in accordance with the following table.

| $I_{dmN1}$ (A) | Setting range RVAB (A) | Actual setting range (A) |
|---|---|---|
| 1600/1800 | 0.5 to 1 x 1600 | 800 - 1600 |
| | 0.7 to 1.4 x 1600 | 1120 - 2240 |
| 2500/3000 | 0.5 to 1 x 2000 | 1000 - 2000 |
| | 0.7 to 1.4 x 2000 | 1400 - 2800 |

Check tripping and fault indications by turning the setting control to the zero position (red mark).

5.14.5.1
Earth fault monitor, YXO 116, ⏚ I> (32)

The convertor must be switched off.

The earth current level can be set with potentiometer "I" on YXO 116, in the range 4-12 A earth current, on the scale on the PCB. The level must be set as low as possible, and the factory setting of 4 A can therefore be retained unless spurious tripping occurs in normal service.

Simulate a fault by connecting 565.X21:4 to 0 V (591.X23:1). Check the fault indication on YXO 116 and on the fault indication display if fitted.

5.14.5.2
Earth fault monitor, RAEUB, ⏚ U > (45)

This unit requires no setting. The tripping signal enters via the indication unit convertor YXO 122. Input 571.X1:5 is normally used and jumper link 571.X1:3-4 is then inserted.

If start sequence B and C is used, jumper link 591.S1:11-12 must be removed, if tripping of the field exciter via this input is required.

To test the function of this unit, disconnect the cable to X1:1 with no voltage applied, and then switch on the voltage. The convertor should now trip and an indication ~U> should be obtained on RAEUB.

5.14.6
Stall protection, YXO 121, Ixt> (27)

The convertor must be switched off.

First set the current level, either by measurement or on the scale of potentiometer "$I_d/I_{dmN1}$". Simulate a current actual value signal (negative voltage) by connecting a variable d.c. voltage from an external potentiometer to 591.X24:2. Connect a voltmeter to the current actual value signal 591.X24:7, and set the required indication level with the potentiometer. A voltage of 5 V corresponds to $I_{dmN1}$. Connect a voltmeter or recorder to 772.X21:2. Turn potentiometer $I_d/I_{dmN1}$ slowly anticlockwise until the voltage at X21:2 changes from "0" to "1".

If YXO 121 is to be used for load indication without speed conditions, jumper link 772.S1:1-2 must be removed.

Set the speed level either by measurement or on the scale of potentiometer "N". Connect a variable d.c. voltage from an external potentiometer to the speed actual value signal, X21:2 on YXR 162 or X21:8 on YXR 163, and set the required speed signal. Connect a voltmeter or recorder to 772.X21:3. Turn the potentiometer "N" slowly anticlockwise until the voltage at X21:3 changes from "1" to "0".

Set the time either by measurement or against the scale with the "TIME" potentiometer. The easiest way to do this is to use a recorder, with one channel connected to 772.X21:1, and the other to 722.X21:5. Start the time circuit by connecting 772:X21:1 to 0 V (591.X23:1) and measure the time taken for 772.X21:5 to go to "0".

In addition, check that the convertor is tripped (when X21:5 goes to "0") and that a fault indication is given on YXO 121, and on the fault indication display if fitted.

5.14.7
Brake fault, YXZ 143, (26)

The dynamic/mechanical brake control unit, YXZ 143, is fitted with circuits to monitor brake operation. Simulate a fault by connecting 778.X22:5 to 0 V. Check that the convertor is tripped, and that a fault indication is given on YXZ 143 and on the fault indication display if fitted.

5.14.8
External faults, YXO 122, 1 and 2 (33)

Convertor indication unit YXO 122 has two inputs for external faults. Select the required function by fitting jumper links in accordance with the table below:

| | Fault 1 571.X1:5 | | Fault 2 571.X1:7 | |
|---|---|---|---|---|
| Jumper link positions 571.S1: | 3-4 | 5-6 | 7-8 | 9-10 |
| Fault signal "1" for fault | X | | X | |
| Fault signal "0" for fault | | X | | X |

X = jumper link inserted

Fault signal "1" means that an external fault contact has closed to M1+. Fault 1 and Fault 2 normally give "General trip"; see Figure 4-26 in YT 280-103 E, Description. This means that the field exciter does not trip in starting sequence B and C. See Section 4.3.1 of the same publication. To obtain field exciter tripping for Fault 1 with starting sequence B and C, remove jumper link 591.S1:11-12.

Simulate the external faults in an appropriate manner so that the convertor is tripped. Check that a fault indication is given on YXO 122, and on the fault indication display where fitted.

## 6
## CONCLUDING OPERATIONS

If the drive equipment includes units for reference generatior master control etc. in the "drive control equipment" these mus also be adjusted. Commissioning of units in the "drive contrc equipment" is described in instructions provided specifically for each individual installation.

If the START 1 signal has been simulated as described in Secti 4.1, the original circuit must be reinstated. If a sequential control unit YXP 132, YXP 133 or YXP 134 is fitted, select the required starting sequence as described in Section 4.3 of YT 280-103 E. Normally the convertor is delivered with jumper links inserted for starting sequence C. If B or D is required the jumper links on YXT 115 must be arranged as shown in the table in the same section.

The convertor is delivered with jumper links inserted for starting sequence A if none of the above sequential control units is fitted.

Switch on the convertor and check that the required controlled apparatus comes on and that the acknowledgement lamp in the ON pushbutton lights up. Then give a START signal via the reference unit, and check that the drive can be controlled in the manner intended.

Check that all screw terminals for external connections are tight. Check that all printed circuit boards are firmly home their sockets.



Electronics Division, ASEA. S-721 83 Västerås. Sweden

# TYRAK® 8A DC DRIVE SYSTEM

Thyristor convertors YGMK, YHMK, YGML, YHML
Power range 10-2000 kW

Contents



8

# 1
# GENERAL

## 1.1
## Convertors YGML, YHML in VSG enclosure

The mains supply to the convertor is switched on and off by means of the load switch. The convertor is switched ON and OFF by means of spring-return pushbuttons on the instrument unit, or from parallel controls on a control desk, for example.

The activation of the equipment is controlled by the sequential control circuits, and in certain cases there are two steps, ON and START (conversely STOP and OFF).

How much of the equipment that is activated at ON and at START depends on how the sequential control circuits are programmed.

## 1.2
## Switch-on

Set the load switch to "1". Check that all the conditions for starting or running are fulfilled (lubrication, cooling etc.).

Press the ON pushbutton. The signal lamp I lights up, and the equipment is ready to run.

## 1.3
## Running

When the reference unit is used a START order is automatically given when a reference (INCH, CRAWL etc.) is given.

If there is no reference unit, the sequential control circuits must be programmed so that the entire switch-on sequence is performed when an ON order is given. For this purpose the speed reference can be given by a reference potentiometer.

In a drive with double convertors (YHMK, YHML) the direction of rotation of the machine is determined by the polarity of the speed reference.

## 1.4
## Switch-off

Reduce the speed of the machine to zero by giving a STOP order (to the reference unit) or by reducing the speed reference to zero. Then press the OFF pushbutton.

If the OFF pushbutton is pressed without reducing the machine speed, the convertor will be disconnected from the supply and the machine will continue to rotate until the load makes it stop.

## 1.5 Tripping

The basic version of the convertor includes overload protection. Other protection and monitoring circuits are accessories. When a protection or monitoring circuit has operated, an indication is given by an LED on the circuit board. After tripping, the convertor must be reset before it can be restarted.

NOTE. Resetting is not possible when the reference unit is receiving a run order.
The indication remains until the "RESET" pushbutton is pressed.
After tripping for an overload the convertor can be restarted after 1-2 mins.
When abnormal d.c. current pulsations are indicated ($I_n$>) the quick-blow fuses of the thyristor unit must be checked, and replaced if necessary.
Always investigate the cause of the fault after tripping.

# 2
# SYMBOLS

## 2.1
## Symbols in the convertor

| | |
|---|---|
| ON 1 | 1 |
| OFF 0 | 0 |
| TRIP RESET | o |
| RESET | |
| OVERLOAD | M |
| OVERCURRENT | I > |
| CURRENT ASYMMETRY | $I_n$> |
| UNDERVOLTAGE | U < |
| PHASE SEQUENCE ERROR | Y |
| EARTH FAULT | I > |
| FAN FAULT | |
| MIN FIELD CURRENT | $I_F$< |
| EXTERNAL FAULT 1 | 1 |
| EXTERNAL FAULT 2 | 2 |
| ARMATURE OVERVOLTAGE/ OVERCURRENT FIELD | U>/$I_F$> |

## 2.2
## Symbols in drive control equipment

| | |
|---|---|
| Overspeed | n> |
| Stall | I x t> |
| Brake fault | |

## 2.3
## Symbols to be ordered

The following symbols may be ordered for indication of external faults 1 and 2.

| | |
|---|---|
| Cooling fan overload | |
| Cooling fan overload | |
| Pump overload | |
| Bearing overheat | t°> |
| Machine overheat | t°> |
| Machine cooling (pressure switch) | p< |
| Machine spark monitor | |
| Lubrication | |
| Machine overload | |

# TYRAK® 8A DC DRIVE SYSTEM

Thyristor convertors YGMK, YHMK, YGML, YHML
Power range 10-2000 kW

Contents | Page



8

## 1 GENERAL

None of the convertor components are subject to wear in the normal sense. Maintenance is therefore mainly of a preventive nature. In addition to the items to be checked listed below, the convertor requires general maintenance to ensure troublefree running.

This aspect of maintenance is common to all electrical equipment, and may therefore be regarded as a sufficiently well established part of the maintenance routine.

## 2 ITEMS TO BE CHECKED

The convertor should be inspected at regular intervals. The length of these intervals depends on the nature of the duty, and the environment (presence of vibration, dust, moisture etc.).

The following points should be checked:

- accumulation of dust and dirt
- connections
- fixing

Bear in mind the risk of injury. Disconnect the a.c. supply before working on the inside of the convertor.

### 2.1 Dust and dirt

Dirty cubicles must be cleaned. the recommended means of removing dust is a vacuum cleaner. Compressed air may be used in an emergency, but make sure that it is dry. Persistent dirt can be removed with the solvent isopropyl alchohol, followed by blowing-dry with clean air.

After cleaning it is advisable to check the convertor visually for mechanical damage, overheated components and so on.

If a dust filter is fitted, it must be cleaned or replaced if necessary. The easiest way to clean the filter is to rinse it in water (up to 40 °C), possibly with a small amount of high quality detergent.

If greasy substances are present, it may be cleaned in warm water with an alkaline degreasing agent. The filter pad must not be wrung or squeezed during cleaning, and must not be exposed to powerful jets of water.

8

Where a very high degree of dust extraction is required, the filter should not be cleaned more than 2 or 3 times. After that it should be removed.

It is important that the net covering the intake for cooling air is kept clean.

2.2
Connections

Main circuit
Tighten all heavy cable and busbar connections on the load switch unit, thyristor unit and contactor unit. Check busbar joins and connections to thyristors, and the quick-blow fuses on the thyristor unit.

Other circuits
Using a screwdriver, tighten all other screw connections (contactors, transformers, circuit boards, terminal blocks etc.).
Check that the circuit board connectors are pushed fully into the PCB contacts.

2.3
Fixing

Make sure that all units in the cubicle are screwed firmily into position and that there are no loose screws or nuts.

Check the fixing and connections of the control equipment circuit boards.

All plastic holders must be sound, and the edge connectors (board-to-board) must be pushed fully into the PCB contacts. The cables must be fixed so that they do not chafe against sharp objects.

3
REPLACEMENT OF PARTS

3.1
Fan unit, 230-400 A convertors

Disconnect the connections to terminal block 65.X1 and the earthing cable. The unit can then be withdrawn.

3.2
Fan unit, 650-1400 A convertors

Remove the small panel on the top plate. Then remove the panel on the thyristor unit. Disconnect the cable connection(s) at the terminal block. The fan(s) can then be withdrawn vertically upwards.

3.3
Fan unit, 1600-3000 A convertor

First disconnect the cannon cable contact. The fan enclosure can then be unscrewed and removed. 8

3.4
Thyristor, 40-400 A convertors

Remove the quick-blow fuse. Then remove the clamp that hold the thyristor against the heat sink.
Connections to the RC circuit, may also have to be disconnectid (spade connectors).

3.5
Thyristor, 650-1400 A convertors

Remove the quick-blow fuse. Slightly slacken the four screws securing the heat sink to the d.c. busbar. The entire "thyristor package" with heat sinks and RC circuits can now be withdrawn.

3.6
Thyristor, 1600-3000 A convertor

Disconnect the bar connections to the thyristor concerned. The complete thyristor package can then be withdrawn by removing the screws holding the package in place in the thyristor bridge and then thyristors thereby made accessible.

3.7
Mounting a thyristor

This is the procedure for mounting a thyristor on the heat sink:

1. Lightly polish the heat sink contact surface with a fine emery cloth.

2. Clean the heat sink and thyristor contact surfaces with ethanol and a lint-free cloth.

4. Insert locating pins in the locating holes of the heat sink/thyristor. The heat sink and thyristor are aligned by the locating pin. Check that the thyristor is the right way round (note the symbol on the component).

5. The thyristor-heat sink assembly is held together by the mounting clamp. Tighten the mounting clamp screws alternately by hand, so that the leaf-spring comes parallell with the mating surface between the heat sink and thyristor. Then, using a socket wrench, continue turning the screws a half-turn at a time on either side (still alternately). The mounting clamp has several snap-points, each marked with different mounting forces. Tighten the screws until the indicating spring for the correct force snaps over the leaf-spring.

| Thyristor | Convertor | Mounting force |
|---|---|---|
| YST 2 | 40-400 A | 4 kN |
| YST 6 | 650-800 A | 8 kN |
| YST 14 | 1250-1800 A | 16 kN |
| YST 35 | 2500-3000 A | 40 kN |

Se also the mounting instructions supplied with the thyristor.

3.8
Pulse transformer unit, 40-400 A convertor

Remove the top screw on the panel holding circuit board 71 (and, for double convertors, 72). The panel can now be lifted out for easy access to the circuit boards.

3.9
Power supply unit

Remove the circuit board on the power supply unit. This gives access to the screws that secure the apparatus plate on the transformer. Detach and tilt up the plate for access to the smoothing capacitors beneath it.

3.10
Printed circuit boards

Remove the screw terminal block for external connections by pulling it straight out from the circuit board. Carefully release the circuit board from the plastic holders, and pull it out of the internal connector.
NOTE. To maintain reliable connections, the connector should not be pushed on and off more than about 25 times. After this the connector should be replaced. New edge connectors must be fitted when changing circuit boards. These are supplied with the new circuit board.

# TYRAK® 8A DC-DRIVE SYSTEM

Thyristor convertors YGMK, YHMK, YGML, YHML

Power range 10-2000 kW.

Contents



8

# 1
# GENERAL

## 1.1
## Check of external factors

When a fault develops in the drive equipment, external factors must first be eliminated as a cause of the malfunction.

Check therefore that:

- the mains voltage is correct.
- the control signals reach the convertor.
- that the loading of the DC machine is at a normal level

Check then that there are no loose contacts between the DC machine and the convertor. Check cables and terminal connections for armature convertor, field exciter and tachometergenerator.

## 1.2
## Check of DC machine

Inspect the DC machine before checking of the convertor is begun.

Check that the brushes are freely movable and that they are in good contact with the commutator.

If the DC machine can be operated, perform an acceleration test and check that sparking at the commutation is not excessive.

Check also that the coupling between the DC machine and the tachometer is intact and correct.

## 1.3
## Measurement instruments required

A multimeter with pointer indicator is required when tracing faults in the convertor.

For certain faults, the use of a recorder and an oscilloscope is necessary.

When checking sequence control circuits and analog signals and trimming controllers, a testing unit YXO 115 (catalogue number YT 296 000-PG) simplifies the work. Information YT 280-112 E describes this test unit.

2
TABULATION OF INDICATIONS OF FAULTS IN THE CONVERTOR

| Fault indication | Probable cause of fault |
|---|---|
| Overload of fans | Tripping of overload relay (external fans)<br>Motor failure<br>Phase loss<br>Fan drive stop (convertor fans also)<br>Fuse rupture<br>Acknowledgements from the fan contactor are not received |
| Low field current<br>M I< | Fuse rupture<br>Break in cables or field windings<br>Incorrect setting<br>Insufficient difference between indication level for low field current and field current set.<br>Field exciter fault<br>Fault in ON order to field exciter<br>Fault in field exciter contactor<br>No indication of field current despite normal field current.<br>Fault in field current regulation (adjustable or controlled field exciters). See descriptions YT 280-110 E, section 2.6 and YT 280-111 E, section 7 respectively.<br>Fault in field reversal unit.<br>See description YT 280-110 E, section 4. |
| Over current, field<br>M I > | Setting error<br>Insufficient difference between the indication level for high field current and field current set.<br>Field supply error.<br>Fault in current measurement<br>Fault in field current regulation. See descriptions YT 280-110 E, section 2.6 or YT 280-111 E, section 7 for adjustable and controlled field exciter respectively. |
| Overvoltage, armature<br>M U > | Fuse rupture DC fuse. } See description YT 280-103 E sec. 7<br>Fault in EMF measurement. }<br>Fault in EMF-controller. See description YT 280-111 E, section 11. |
| Overload (DC machine)<br>M | Overload on the DC machine.<br>Setting error. See description YT 280-103 E sec. 4.4.4 and Commissioning instructions YT 280-105 E, sec. 5.14.4. |

8

| Fault indication | Probable cause of fault |
|---|---|
| Overcurrent, armature<br>(M) I > | Fault in armature current regulation.<br>Faulty control pulses. See description YT 280-103 E section 4.2.1 and 5.2.1.<br>Fault in current measurement. See desc. YT 280-103 E section 5.2.2.<br>Fault in current controller. See desc. YT 280-103 E section 4.2.2.1.<br>Fault in phase advance circuit See desc. YT 280-103 E section 4.2.2.2.<br>Overshoot in the armature current caused by trimming too finely.<br><br>Fault in the voltage adaption circuits (double convertor only). See description YT 280-103 E, section 4.2.3.<br><br>Setting error. See commissioning instructions YT 280-105 E, section 5.14.2.<br>Insufficient difference between the indication level and the current limit set.<br><br>Supply failure in connection with conversion.<br>Thyristor fault. See section 4. |
| Pulsations in the armature current<br>(M) $I_n$ > | Fuse rupture, thyristor fuse<br>Fuse rupture, auxiliary supply fuse<br>Non-symmetric mains supply<br>Control pulse absent. See description YT 280-103 E, sections 4.2.1 and 5.2.1.<br><br>Unstable control |
| Under voltage, mains supply<br>~ U < | Inadequate mains supply voltage<br>Fuse rupture<br>Failure of electronic supply Q1<br>Transformer failure |
| Phase sequence fault<br>Y ↷ | Connection to mains voltage made with incorrect phase sequence. |
| Earth fault current measuring<br>⏚ I > | Earth fault below convertor connection to mains.<br><br>Too low indication level on the earth current. |

8

| Fault indication | Probable cause of fault |
|---|---|
| Earth fault voltage measuring ⏚ U > | Earth fault under convertor transformer (only for convertor with $I_{dmN1}$ > 1600 A<br><br>Too low indication level. |
| Overspeed DC machine Ⓜ n > | Loss of tachometer connection<br>Faulty tachometer<br>Fault in speed control<br>Indication level set too closely |
| Motor stop I × t > | Excessive load on the DC machine<br>Field current does not reach its full value |
| Faulty brake (◯) | Mechanical brake do not release<br>Mechanical brake do not operate |

3
OTHER FAULT SYMPTOMS

| Fault indications | Probable cause of fault |
|---|---|
| Overcurrent on switching on | See fault indication "Overcurrent, armature" |
| Thyristor fuse rupture | See fault indication "Overcurrent, armature" |
| DC machine does not reach full speed | Fault in reference voltage<br>Fault in field weakening. See desc. YT 280-111 E, sec. 11. |
| Convertor functions only with one torque direction | With double convertor:<br>Max EMF is too high (Braking is delayed)<br>Fault in the blocking unit. See description YT 280-103 E, section 4.2.3.<br>With field reversing<br>See description YT 280-110 E, section 3 for diode- and adjustable field exciter or YT 280-111 E, section 10 for controlled field exciter. |
| Convertor does not start | (For measurement, the instrument zero is connected to 591.X23:1 or to B50.X1:15)<br>The current regulator is not phase advanced<br>("1" on 591.X25:6 gives phase advance)<br>The signal START 1 is absent<br>("1" on 591.X27:5 gives start order)<br>Convertor tripped<br>("0" on 591.X27:6 gives tripping)<br>The main contactor does not switch on<br>("0" on 591.X26:3 gives acknowledgement of the main cont.)<br>("1" on 591.X26:10 gives on order to the main contactor).<br>The field exciter does not switch on<br>("1" on 591.X23:9 gives acknowledgement of field current)<br>("1" on 591.X27:10 gives on order to the field exciter).<br>The fans do not start<br>("0" on 591.X26:9 gives acknowledgement of fan operation)<br>("1" on 591.X27:2 gives "on" order to fans)<br>ON-order absent<br>("0" on 591.X26:5 with ON-signal)<br>("0" on 591.X26:8 with OFF-signal)<br>Incorrect supply voltages Q1, M1, M2.<br>See description YT 280-103 E section 3.1<br>Incorrect supply to electronics<br>+15 V (591.X23:5)<br>-15 V (591.X23:4) |

8

# 4
# CHECK OF THYRISTOR

## 4.1
## Resistance measurement

Switch off the convertor and remove the main fuses. Leave the thyristors connected in the circuit and measure the resistance between anode and cathode as shown in fig. 4-1.

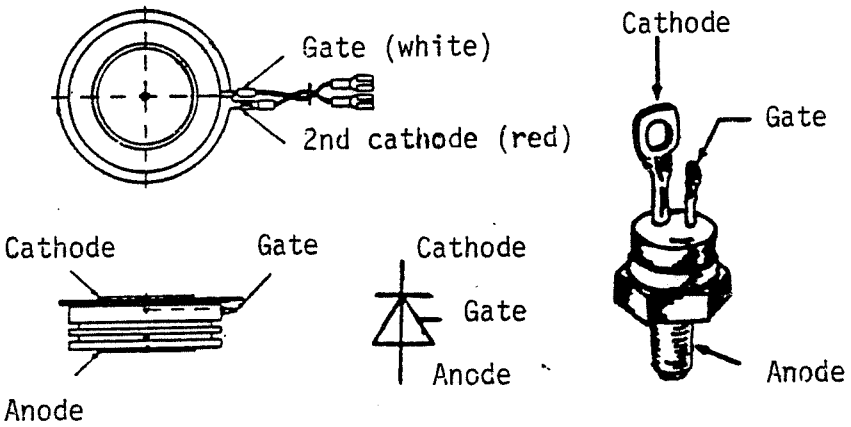


Fig. 4-1

If the resistance over several thyristors is less than 1 kohm, one or more of the thyristors is faulty. Remove then the thyristor fuses and repeat the measurement to determine exactly which thyristor is faulty.

In the case of a double convertor, it is also necessary to remove the connection to the thyristor itself to establish which of the two antiparallel coupled thyristors is faulty.

## 4.2
## Simulation of trigger pulses

The method described above covers the majority of thyristor faults but if it is suspected that a thyristor does not trigger, a triggering must be simulated. N.B, presspack thyristors are to be under pressure to ensure contact and the thyristor is therefore not to be removed from the heat-sink.

Thyristor triggering is simulated most simply with the help of thyristor tester YSP 40 with catalogue number YS 900 102-A. If this is not available, connect up as shown in fig. 4-2.

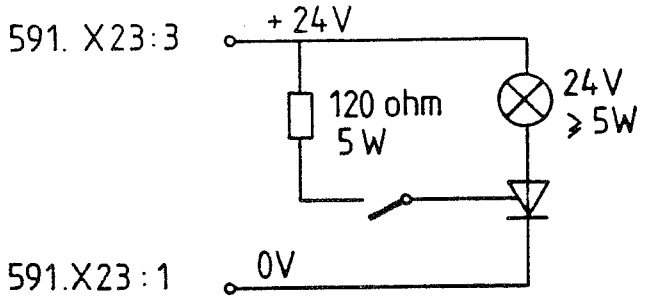


Fig. 4-2

If the lamp illuminates before the contact is closed, the thyristor is short circuited and must be replaced. If the lamp does not illuminate, close the contact. The thyristor should trigger and the lamp illuminate. If this does not happen, the thyristor is faulty and must be replaced.

## 4.3 Test with high voltage

If no fault is discovered in the thyristor by the preceding tests but a thyristor malfunction is still suspected, the thyristor must be tested with high voltage. The thyristor tester YSP 40 is suitable for this test.

If such a thyristor tester is not available, the thyristor can be tested in a circuit as shown in fig. 4-3.

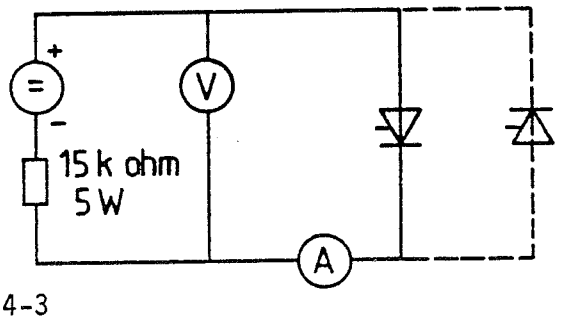


Fig. 4-3

First test the thyristor with positive voltage at the anode an then with positive voltage at the cathode. Increase the voltage from zero and up to the rated voltage of the thyristor minus 200 V. The current must not exceed 5 mA.
Do not permit the voltage to remain on too long as damage can be caused thus to the thyristor. If the thyristor is marked with P18, it should be tested with 18 x 100 - 200 = 1600 V.

Instructions for exchange of the thyristor are given in maintenance instructions YT 280-107 E, section 3.5.

# TEST UNIT YXO 115

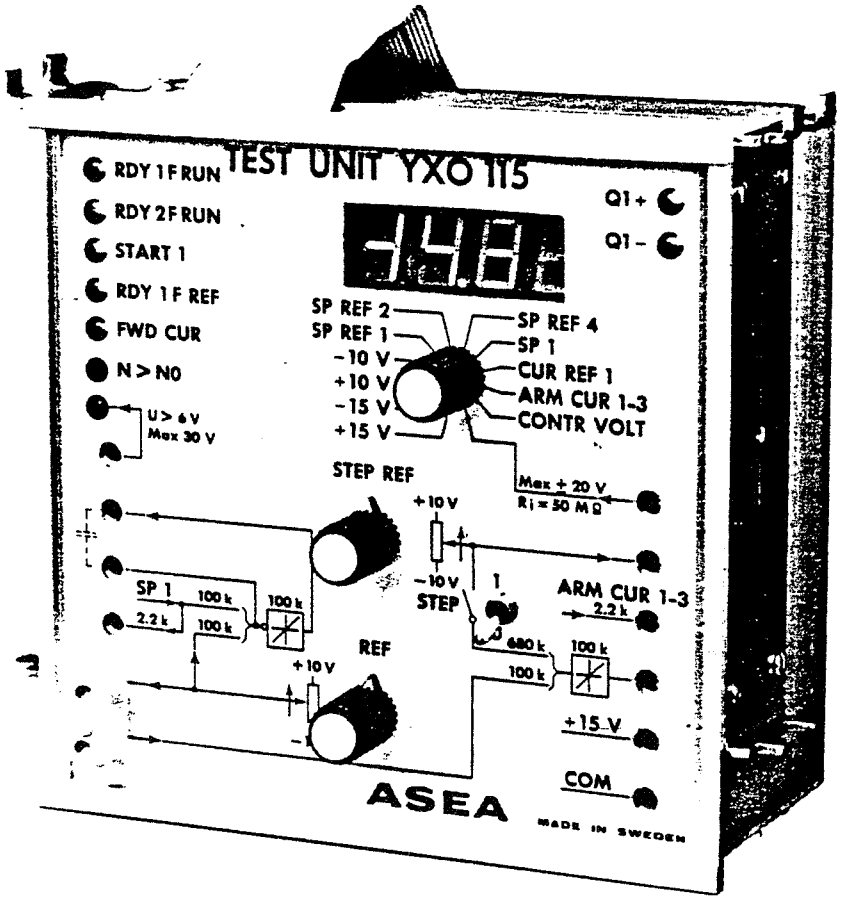


6917 0500 AA (9543) 82-08

Contents Page

## 1 GENERAL

Test unit YXO 115 is an aid in fault tracing and commissioning of the ASEA convertor TYRAK 8A and the frequency convertor YRRA for motor drive systems.

The unit is not supplied as a standard part of the equipment but can be ordered separately.
ASEA Catalogue nr. YT 296 000-PG.

## 2 CONNECTION

The unit is connected to the convertor control equipment by means of the ribbon cable provided.

The connector (791.X32) is located on the lower part of the door to the electronic equipment. The unit is provided with hooks which can be used to hold the unit against the cabinet frame to facilitate measurement operations. See fig. 2-1.

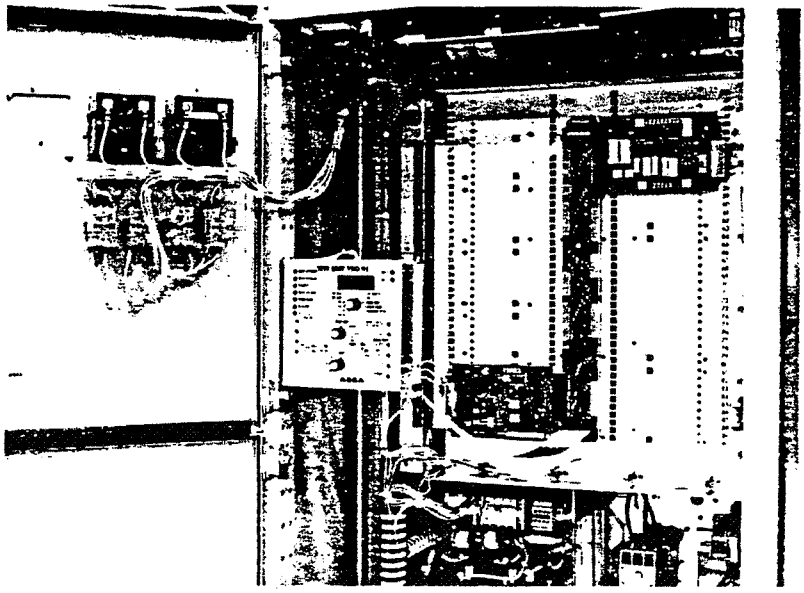

Fig. 2-1 Placing in cubicle

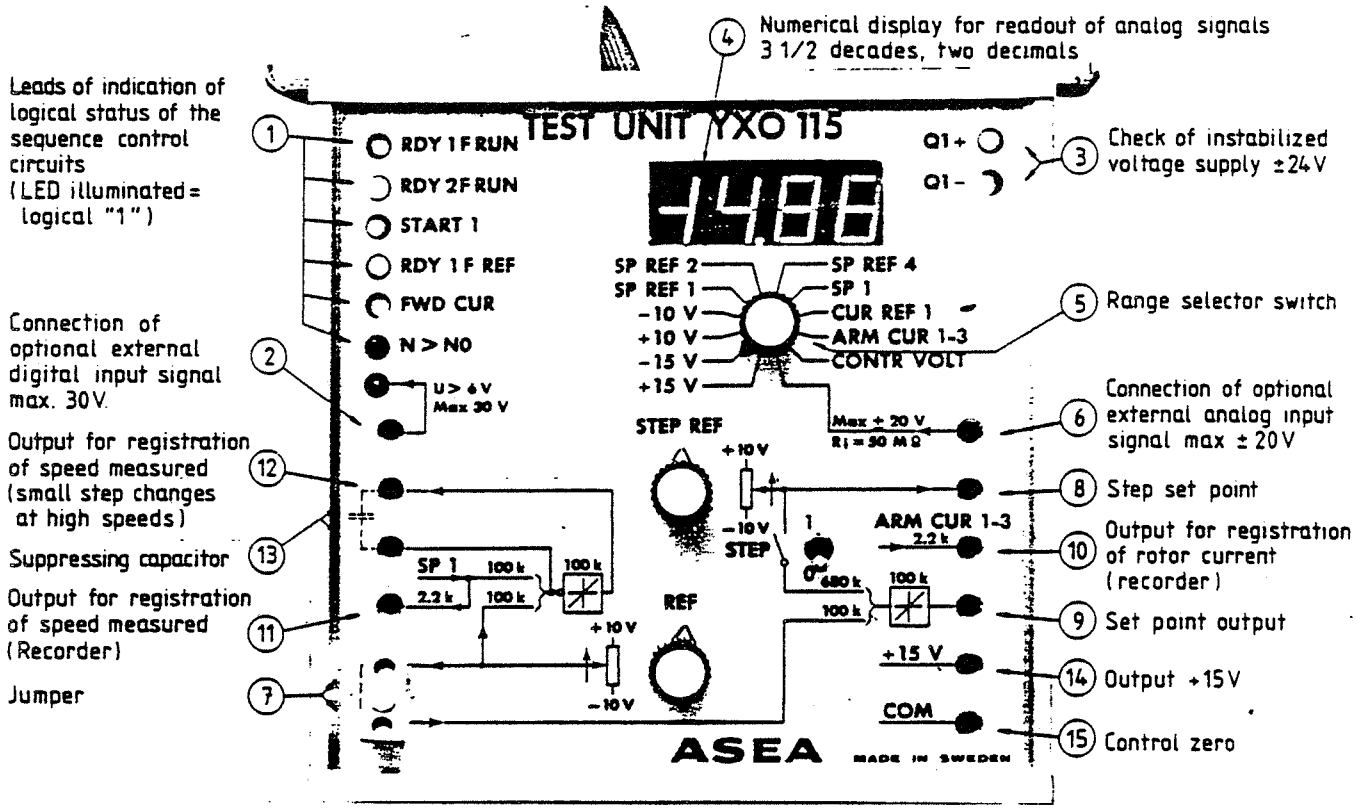


Fig. 2-2 Front plate on test unit

N.B The signal designations on the front plate agree with those on the circuit diagram

## 3 FAULT TRACING

The test unit includes circuits for measurement of both digital and analog signals. See fig. 2-2.

### 3.1 Measurement of digital signals

The status of digital signals is indicated with the help of LEDs.

Six LEDs, 1, are permanently connected and continually show the logical status of the output signals of the sequence control circuits. A seventh LED 2 is connected to a banana socket for measurement of an optional external digital signal up to 30 V.

The input is overvoltage protected up to 150 V.

The LED:s illuminates (logical "1") when the voltage exceeds 6 V.

Two LEDs 3, designated Q1+ and Q1- indicate that the non-stabilized voltage +/-24 V to the electronics of the convertor is at a sufficiently high level.

### 3.2 Measurement of analog signals

The level of analog signals in the convertor is displayed on the numerical display 4 of the unit.

Different signals can be selected with the rotary selector switch 5. An extra measurement input 6 can be selected for measurement of an optional analog signal up to +/-20 V.

The input is overvoltage protected up to 150 V. When measuring voltages exceeding 20 V, the digits are switched off. Accuracy in the temperature range -10 °C - +40 °C: +/-0,2 %.

Measured values can be calibrated if necessary with potentiometer R61 marked "CAL" on circuit board YXO 115 A. The board can be exposed by screwing off the potentiometer knobs and lifting the front plate and board out of the enclosure.

# 4
# COMMISSIONING

## 4.1
## Reference generation, step supplement

To facilitate commissioning of the convertor, the test unit contains circuits for reference generation, step supplement and a terminal for connection of a printer. A basic reference is set with the potentiometer marked "REF". A jumper (7) between two banana sockets conducts the reference to a non-signchanging amplifier with G=1.

A step supplement (8) can be added to the input of the same amplifier.

The step reference is set with the potentiometer marked "STEP REF" and is switched on/off with the selector "STEP".

The reference signal can be connected to an optional reference input in the "control equipment drive system" from the amplifier output (9).

## 4.2
## Connection to recorder

Armature current (ARM CUR 1-3) and actual speed (SP1) can be registered on a recorder. Both signal outputs (10) and (11) are short-circuit protected with a 2.2 kohm resistor.

If small step changes are to be registered at high speeds, the recorder is to be connected to output (12) of the sign. reversing amplifier.

The measured speed value is then used as a bias signal at the input of the amplifier, so that the output signal becomes zero.

The step supplement is not biassed, and the recorder can register the speed variations.

If the measured speed value signal contains interference, this can be suppressed by means of capacitors over the amplifier (13). The correct capacitance, of the order of 0.1 µF, must be found empirically.

# 5
# SUNDRY

The test unit is provided with outputs for +15 V (14) and a control common (15) marked "COM".

These voltages can be used for forced control of swtiches when commissioning the convertor.

"COM" is also used as a zero signal for the recorder and instruments.

# TYRAK® 8A DC DRIVE SYSTEM

Thyristor convertors YGMK, YHMK, YGML, YHML
Power range 10-2000 kW

Contents | Page



8

## 1 INTRODUCTION

This publication describes the commissioning of the convertor, -U, as shown in Figure 1-1 of YT 280-103 E, speed control and all protection and monitoring functions.

If the convertor has an extensive reference system and master controllers in the drive control equipment, -AK1, the supplementary plant-level commissioning instructions should be followed.

The instructions in this publication are based on the assumption that the convertor is of the enclosed type, but the commissioning procedure is essentially identical for a convertor without enclosure, and for a convertor module, so that the instructions can be used for these as well.

The numbers in brackets in the section headings identify the circuit diagram sheets that are referred to in the section below the heading.

Records of commissioning should be kept by noting the set levels and saving recorder charts. If any jumper links are moved or components on solder tags are changed, the circuit diagram must be altered accordingly.



Electronics Division. ASEA. S-721 83 Västerås, Sweden

## 2 EQUIPMENT REQUIRED

1 multimeter 0-1000 V a.c. and d.c.,
$R_i \geq 10$ kohm/V d.c., e.g. AVO meter or UNIGOR

For a diode field exciter or an adjustable field exciter it must be possible to measure field current up to 20 A d.c.

4 meter leads with 4 mm banana plugs and reducers (Cat. no. SK 175 2160) for 2 mm terminals

4 meter leads with 4 mm banana plugs and connectors for test points (Cat. no. 2639 0554-1 black, -2 red)

2 interconnection leads with test point connectors (Cat. no. 2639 0554-3)

1 capacitor $\geq$ 2 µF $\geq$ 15 V

1 good-quality potentiometer, 10 kohm, $\geq$ 0.5 W, linear, e.g. ASEA art. no. 5248 2051-510, for reference setting.
There is a suitable potentiometer in test unit YXO 115.

A phase sequence meter capable of withstanding voltages from the mains voltage up to 500 V may also be needed.

The following documents are also required:

Circuit diagram
Apparatus list
List of adjustments (possibly)

For more advanced commissioning work it will also be necessary to have:

1 oscilloscope capable of "line" triggering

1 recorder, 2 channels, high-impedance input

1 stepping unit with potentiometer for basic reference and potentiometer and pushbutton for step reference.
A suitable stepping unit is included in test unit YXO 115.

# 3
# SAFETY PRECAUTIONS

## 3.1
## Risk of injury

To prevent accidents, observe the following rules.

A Do not carry out commissioning work alone.

B Make sure that you and all others involved know how to switch off the electric power supply to the system.

C Tell people working near the machine that it may start without warning. Screen off the machine if possible.

D If the armature of the machine is fitted with mechanical locking, ensure that the locking device is safe (see also Section 3.2 item D).

E Never work on the convertor when it is "live" unless it is absolutely necessary. The auxiliary supplies should be switched off as well.

3.2
Equipment

To prevent damage to the d.c. machine, the convertor or the test equipment, observe the following points.

A Do not use the load switch or the circuit breaker to open the main circuit. Press the "off" pushbutton first.

B Set the protection circuits low at the beginning of commissioning. For example, during adjustment of the armature current control, the overspeed protection and overvoltage protection circuits can be set very low.

C If the d.c. machine cannot be seen or heard by the commissioning engineer it should be kept under observation by someone who can warn the commissioning engineer or switch off the supply if the machine tends to overspeed.

D During adjustment of armature current control and emf measurement compensation, a current is passed through the armature of the d.c. machine with the machine stationary. The field exciter is disconnected for these operations. Normally the initial friction is sufficient to keep the machine stationary, especially if it is a large machine. If overspeeding problems are encountered with small machines, a mechanical locking device can be fitted to the armature. It is important to make the locking device strong so that it does not fail and cause a hazard.

E Do not pass current through a stationary armature for more than 10 s at a time. The current must not exceed the rated value, and the armature should be turned between each operation so that the current is carried by different commutator laminations.

# 4
# COMMISSIONING PROCEDURE

## 4.1
## General, simulation of START 1 (circuit diagram sheets 23, 26, 27,. 31)

Whatever the type of drive, it should be possible to start field exciter, control equipment, convertor and speed control in a similar manner. It is therefore a good idea to simulate the START 1 signal if the system includes reference units with START/STOP inputs. It is then not necessary to start the master control system and reference generating circuit in advance. However, where a mechanical or dynamic brake is fitted, there are advantages in starting the master control equipment in advance.

These commissioning instructions are based on the assumption that START 1 is simulated, and that the entire convertor can therefore be started by pressing the ON pushbutton. If START 1 is not simulated, both the ON-order and the START-order must therefore be given when the instructions state that the ON pushbutton should be pressed.

START 1 is simulated as follows:

1 None of the following units is fitted: YXP 132, YXP 133, YXP 134 or YXZ 143:
START 1 is always "1", no action.

2 YXP 132 fitted, but not YXZ 143:
Remove jumper link 737.S1:13-14

3 YXP 133 is fitted, but not YXZ 143:
Remove jumper link 737.S1:13-14

4 YXP 134 is fitted, but not YXZ 143:
Remove jumper link 737.S1:3-4

5 YXZ 143 is fitted:
Remove YXZ 143. To prevent the convertor tripping, certain jumper links must be fitted:

If YXO 121 is fitted, link 772.S1:5-6.

If YXO 117 is fitted, but not YXO 121, link 766.S1:1-2.

If neither YXO 117 or YXO 121 is fitted,
link 591.S1:15-16.

4.2
Recommended sequence of operations

1 Check connections of d.c. machine; see Section 5.1.

2 If "control unit external fans" is fitted, set the thermal cutouts; see Section 5.2.

3 Carry out certain checks and adjustments with the main circuit switched off; see Section 5.3.

4 Check external fans; see Section 5.4.

5 Start field exciter; see Section 5.5.

6 When gain adaptation unit YXM 142 is fitted, carry out the necessary adjustments; see Section 5.6.

7 Provisionally start the speed control circuit; see Section 5.7.

8 Adjust the armature current control circuit; see Section 5.8.

9 When d.c. voltage transducer YXC 110 is fitted, adjust the compensation; see Section 5.9.

10 Adjust the armature current limiting circuit; see Section 5.10.

11 Adjust the speed control circuit; see Section 5.11.

12 Adjust the automatic field weakening circuit (if fitted); see Section 5.12.

13 Adjust the torque reversal circuit; see Section 5.13.

14 Adjust the protection and monitoring circuits of the convertor; see Section 5.14.

# 5
# FUNCTION-BY-FUNCTION INSTRUCTIONS

## 5.1
## Checking the d.c. machine

If the driven machine is delicate, for instance if it cannot be run in the wrong direction or must only be run at low speed on starting, the coupling between the d.c. machine and the driven machine must be open, but fixed to the relevant shaft extension. Check with the user or machine manufacturer. The d.c. machine must be ready to run; in other words it must have been fixed to the foundation and cleaned. Auxiliary systems for cooling and lubrication must have been commissioned. The d.c. machine must be lubricated.

The armature circuit, field circuit and tachogenerator must be connected. Make a special point of checking that the field windings are connected for the correct voltage. If there is a series winding, it must not be opposed.

Check that the brushes are in contact with the commutator.

## 5.2
## Setting thermal cutouts (47)

Thermal releases 4, 5 and 6 on the "control unit external fans" (unit H37 or H25) must be set for the rated current of the moto in question. Set the special selector switch for manual or automatic resetting after tripping.

If time relay 7 is fitted, set the delay. The time relay can b checked without a supply voltage, and activated by moving a kno from 0 to 1 and keeping it there until a clicking sound is heard.

## 5.3
## Checks and adjustments without power to the main circuit

For the adjustable and the controlled field exciter jumper link 591.S1:3-4 must be temporarily inserted to prevent tripping for high field current.

Check with a voltmeter that the mains voltage corresponds to the convertor rated voltage ±10 %. Remove the main fuses and close the load switch. If a circuit breaker is included in the system, this should be switched to the TEST position and the feed exciter fuses H1:1-3 screwed out. Then switch on the load switch for the auxiliary voltage supply.

## 5.3.1
## 8 Checking the phase sequence

The phase sequence can be checked in various ways depending on the circumstances:

Alternative 1 (32)
If the accessory "a.c. voltage monitor YXO 116" is fitted, the convertor will trip as soon as the load switch is closed, if the phase sequence is incorrect. If this happens, interchange two incoming phase connections. To check that

YXO 116 works, if the convertor does not trip, connect 541.X21:5 to 0 V (591.X23:1).

Alternative 2 (41)

Use a separate phase sequence meter. Check that the meter is suitable for the mains voltage in question. Check the phase sequence of the incoming voltage. Where the mains voltage is above 500 V, the phase sequence can be checked after the auxiliary supply transformer, where the level never exceeds 500 V. If the phase sequence is incorrect, interchange two incoming phase connections.

Alternative 3 (37)

Use an oscilloscope. Trigger it on "line" and connect the oscilloscope zero terminal to 0 V (591.X23:1). Check the phase positions of the a.c. voltages at YXT 115; they should be as shown in Figure 5-1.

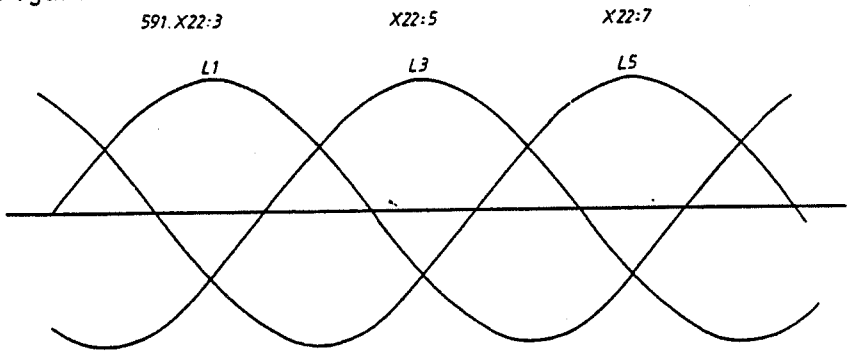


Fig 5-1

If the phase sequence is incorrect, interchange two incoming phases.

Alternative 4

In the current range 650 ≤ $I_{dmN1}$ ≤ 1400 A, an axial fan with a three phase fan motor is used and the direction of the air flow may then indicate the phase sequence.

If the phase sequence is correct, the air flow should be backwards. If the air flows in the wrong direction, interchange two incoming phase connections. Make sure that the connection to the fan motor has not been disconnected after delivery.

Start the fan with the ON pushbutton; the main fuses must still be out.

Adjustable field exciter YFHE must also be connected with the correct phase sequence. If the field exciter is delivered in the same enclosure as the armature convertor, the phase sequence will automatically be correct if the armature convertor is correctly connected. Where the field exciter is not delivered in the same enclosure as the armature convertor, the phase sequence must be checked. Do not carry out this phase sequence check until the field exciter is to be started, as described in Section 5.5.2.

5.3.2
Setting the delay angle (37)

The factory settings are $\alpha_{min}$ = 0 and $\beta_{min}$ = 30 $^{o}$el, unless otherwise stated on the "List of adjustments". Normally there is no need to change these settings, but if adjustment is required, see Description, Section 4.2.1 (YT 280-103 E). $\beta_{min}$ is set for the impedance of the supply, on the basis of a special calculation.

5.3.3
Checking ON/OFF circuits and fan monitor (31)

Press the ON pushbutton and check that the convertor fans start, with upward or backward air flow, as the case may be. For convertors with $I_{dmN1} \geqslant 1600$ A, check that the convertor fan rotate in the direction of the arrow on the fan housing. Press the OFF pushbutton and check that the fans stop. Small convertors have no convertor fan; in these cases, check instead that the contactors close in "control unit external fans" (H37 or H25) or that the field exciter contactor closes.

If there are external ON/OFF pushbuttons, check these in the same way. If the field exciter is not required to trip for fan fault, e.g. on dynamic braking, jumper link 591.S2:15-16 must be removed.

Leave the convertor on. Test the fan monitor by pressing a test pushbutton on one of the thermal cutouts on "control unit external fans". The convertor should now trip. If convertor indication unit YXO 122 and a fault indication display are fitted, check fault indication. If "control unit external fans" is not fitted, but there is a convertor fan, fan fault can be simulated by connecting 591.X29:8 to 0 V (591.X23:1).

After these checks, open the load switch and put back the main fuses, or alternatively, switch the circuit breaker to the ON position and screw in the field exciter fuses.

5.4
Checking the external fans (31, 47)

Prevent convertor switch-on by connecting 591.X27:10 to 0 V (591.X23:1). Close the load switch and press the ON pushbutton. Check that the cooling fans of the d.c. machine run in the right direction. Press the OFF pushbutton and remove the connection between 591.X27:10 and 0 V.

5.5
Field exciter commissioning(31)

Connect an external potentiometer or a stepping unit between +10 V (B50.X1:14 or 591.X23:7) and -10 V (B50.X1:13 or 591.X23:8) to produce a variable d.c. voltage. This must remain connected for the entire commissioning procedure.

If test unit YXO 115 is to be used, connect its ribbon cable to 791.X32.

Prevent the main contactor closing by connecting 591.X26:10 to 0 V (501.X23:1). For adjustable and controlled field exciters, remove jumper link 591.S1:3-4.

5.5.1
[illegible]e field exciter (54)
YBLH, YBLJ

Connect an ammeter in the field circuit. If there is no field current reversal unit, the ammeter may be connected between terminals X11:2 and X11:3 on the field exciter.

Press the ON pushbutton and check that the field current and field voltage are correct for the drive equipment. The current must not exceed the rated current of the field exciter when the d.c. machine is warm.

If fine adjustment of the current is necessary, this can only be done with an external series resistor at a supply voltage $\leq$ 500 V. Where the supply voltage is > 500 V, a transformer is fitted, and this permits some adjustment of the field voltage. See the description of the field exciter, YT 280 110 E, Section 1.1.

Check that the convertor is tripped for low field current, by temporarily unscrewing the field exciter fuses. If convertor indication unit YXO 122 and a fault indication display are fitted, check fault indication as well.

If a field current reversal unit is fitted, see also 5.5.3.

5.5.2
Adjustable field exciter (54)
YFBE, YFHE

When the field exciter and the armature convertor are delivered in the same enclosure, the phase sequence will automatically be correct if the armature convertor is connected with the correct phase sequence. If the field exciter is delivered separately, the phase sequence must be checked as follows:

The supply voltage must be switched on, but the convertor must be OFF. Using a voltmeter, check that the field exciter is connected to the same phases as the armature convertor. The voltage must be zero between terminal 1 of the field exciter contactor and phase L1 of the armature convertor (busbar A after load switch), between terminal 3 and phase L2 (busbar B) and between terminal 5 and phase L3 (busbar C).

Connect an ammeter in the field circuit. If there is no field current reversal unit, the ammeter may be connected between terminals X16:2 and X16:3 on the field exciter.

Set potentiometers "$I_F$" to minimum (fully anticlockwise) and "$I_F$>" to maximum (fully clockwise).

NOTE: Do not remove the safety screen when the supply voltage is switched on, since the control and regulating circuits of this field exciter are directly connected to the incoming a.c. supply.

Press the ON pushbutton and coarsely adjust the basic field current with potentiometer "$I_F$". If the convertor trips when the indication level for low field current is passed, turn potentiometer "$I_F$" to a setting slightly above this level, and turn the convertor on again.

Using a voltmeter, check that the field voltage is correct, and that there is sufficient margin to the maximum output voltage of the field exciter. Note that the resistance in the field winding, and therefore the necessary field voltage, may increase by 40% when the d.c. machine warms up. If the rated current of the field winding is unknown, a provisional setting of 70% of rated voltage may be used when the machine is cold.

Increase the field current to 105% of basic field current to set the overcurrent tripping level. Note that there is no separate thermal protection for the field circuit, and the overcurrent level should therefore not be set higher than the level that the field winding, connection cables or field exciter can withstand.

Slowly turn the "$I_F$>" potentiometer anticlockwise until the convertor trips. If convertor indication unit YXO 122 and a fault indication display are fitted, check the fault indication.

Reduce the field current setting slightly with "$I_F$" to be sure that it is below the overcurrent tripping level. Restart the convertor and slowly reduce the field current until it trips and a fault indication for low field current is obtained (where applicable). Note the current at which the convertor trips (normally 8-20% of field exciter rated current). If current reference unit YXZ 142 is fitted, take care not to allow the field current to be reduced too close to this level.

8 When using the YXZ 142, remember the hysteresis of the excitation circuit of the DS machine. This results in a higher EMF if the field current is reduced to a certain value than if it is increased to that value.

Finally set the correct base field current.

If a field current reversal unit is fitted, see also 5.5.3.

5.5.3
Field current reversal unit (53, 55)

A field current reversal unit may be fitted together with a diode field exciter and an adjustable field exciter. Check by forced control of the field current reversal unit that the field current can flow in both directions. To do this connect +15 V (2.X23:4) for reverse current direction or -15 V (2.X23:5) for forward current direction to 2.X22:11, or use external control.

Forced control for the forward current direction must be maintained for the subsequent operations.

5.5.4
Controlled field exciter, current control (51, 52)
YHBC

Connect a meter for current measurement, either an ammeter connected directly into the field circuit or a voltmeter connected to field current signal 52.X21:6; a 10 V signal corresponds to the rated current of the field exciter.

Check the rated d.c. voltage of the field exciter on the rating plate. If it is greater than the maximum permitted field voltage of the d.c. machine (rated d.c. voltage + permissible degree of forcing), the maximum field exciter voltage must be limited by reducing the limiting level of the current controller. For further details see Chapter 7 of YT 280- 111 E, field exciter description.

On basic field control unit YXT 117, turn the "GAIN", "$I_F$>", "$I_1$" and "$I_2$" potentiometers fully anticlockwise and the "$I_F$>" potentiometer fully clockwise.

If the exciter is equipped with automatic field weakening with emf controller YXR 160, certain adjustments need to be made on the emf controller. Check that jumper links 51.S1:1-2, 3-4, 7-8, 9-10 are fitted. Turn the "LEVEL", "R36" and "LIM 1" potentiometers fully clockwise and the "GAIN" and "PHASE LEAD" potentiometers fully anticlockwise. Connect a voltmeter to 51.X21:3 and adjust with potentiometer "LIM 2" for a voltmeter reading of 0.0 V.

If the function generator YXM 151 is included, check then that the jumper links 52.51:3-4 and 52.53:1-2 are removed.

If speed-controlled field weakening unit YXM 152 is fitted, check that jumper link 51.S1:1-2 is present for d.c. machine type LAB; for other machines this link must be removed. Turn the "GAIN", "SLOPE 1", "SLOPE 2", "SLOPE 3" and "SLOPE 4" potentiometers fully anticlockwise, and turn the "LEVEL" potentiometer fully clockwise.

Check that jumper links 52.S2:1-2 and 3-4 are removed for 50 Hz mains frequency and inserted for 60 Hz mains frequency.

Switch on the convertor and provisionally set the required basic field current with potentiometer "$I_1$" or an external potentiometer. Using a voltmeter, check that the field voltage is correct, and that there is sufficient control margin.

The resistance of the field winding, and therefore the required field voltage, may increase by 40% when the winding warms up. If the rated current of the field winding is unknown, a provisional setting of 70% of rated voltage when cold may be used.

The protection circuits for high field current ("$I_F$>") and low field current ("$I_F$<") must now be adjusted. To avoid passing current through the field winding it is possible to simulate a current signal by connecting a negative voltage to 52.X22:5.

Increase the field current to 5% above basic field current to set the overcurrent tripping level. Turn the "$I_F$>" potentiometer anticlockwise until the convertor trips. When approaching the correct level, turn the potentiometer extremely slowly, since the level discriminator has a built-in delay of about 2 s. If convertor indicator indication unit YXO 122 and fault indication display are fitted, check the fault indication

Note that there is no separate thermal protection for the field circuit, and the overcurrent level should therefore not be set higher than the level that the field winding, connection cables or field exciter can withstand.

Reduce the field current setting slightly to be sure that it is below the overcurrent tripping level.

Restart the convertor and set a field current corresponding to the low field current tripping level. Normally the level can b about 70% of the lowest service field current (allowing for any field weakening). Turn potentiometer "$I_F$<" slowly clockwise until the convertor trips. If convertor indicator indication unit YXO 122 and a fault indication display are fitted, check the fault indication.

With Opti-Torque duty it is important to bear in mind that there is a flipflop which prevents tripping for low field current when the field current reference is below about 2 V (normal value). This means that "$I_F$<" should be set slightly lower. The blocking level can be changed with resistor R10 on YXN 118, as shown in Figure 8-2 of YT 280 111 E.

Setting "GAIN" with a voltmeter

In the absence of a recorder, and where fast control response is not a primary consideration, the current controller gain can be set with a voltmeter. Connect a voltmeter with a measuring range of about 5 V a.c. in series with a capacitor $\geq$ 2 µF, to current controller output 52.X21:7. Set about half the basic field current and turn the "GAIN" potentiometer clockwise until the voltmeter reads about 1 V.

Setting "GAIN" with a recorder

Connect one channel of the recorder to the current signal 52.X21:6 and the other channel to the current controller output voltage 52.X21:7. Connect a stepping unit (e.g. test unit YXO 115) to an unfiltered reference input 52.X21:5 and set a low negative voltage. If automatic field weakening is used, or for double convertors (YHBC) in an Opti-Torque system, this input is occupied, and must be temporarily disconnected (remove jumper link 52.S3:1-2 or 71.S1:19-20 respectively).

Set about 5% of basic field current, and impose small steps (< 1%) on the reference. Turn "GAIN" clockwise until there is a slight overshoot (< 10% of the relevant current) on the actual value signal. Check that the step is not so great that the current controller limiting circuit comes into operation. Turn back the "GAIN" potentiometer by a factor of about 2 on the scale on the PCB, since the inductance of the field winding is lower at full field current. The adjustment may also be carried out at full field current, but this makes it difficult to see the step on the recorder.

Restore removed jumper links and disconnect the stepping unit.

5.5.5
Controlled field exciter, setting the function generator (51)

When a function generator YXM 151 is fitted, carry out the following settings to simulate the excitation curve of the d.c. machine. The convertor must be off.

Start with jumper link 54.S1:1-2 inserted, and use the "ADJ" potentiometer to adjust the signal level at 54.X21:1 to 10.0 V. Turn the potentiometers "SLOPE 1, 2, 3 and 4" fully anticlockwise. Calculate the voltages for the three break points. The end point of "SLOPE 4" must always be -10.0 V current reference for +10.0 V flux reference at 54.X21:3.

Remove jumper link 54.S1:1-2. Connect a voltage (negative) to 54.X21:4, corresponding to the ø reference at break point 1. Turn the potentiometer "SLOPE 1" clockwise to give the corresponding current reference at 54.X21:5. Increase the voltage at 54.X21:1 to the ø reference at the next break point, and set "SLOPE 2". Set the other two break points in the same way.

Reconnect jumper link 54.S1:1-2.

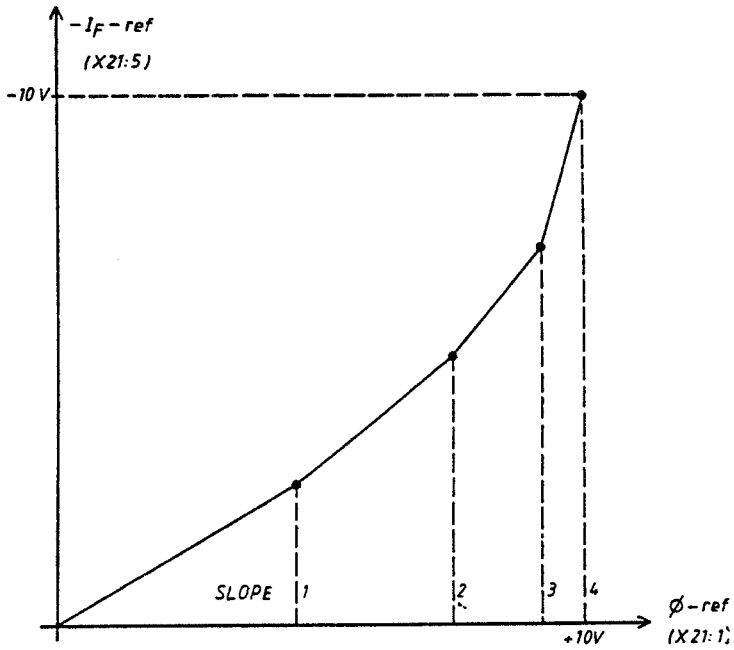


Figure 5-2

5.5.6
Controlled field exciter YGBC, setting the basic field current (52)

For fixed field current or for automatic field weakening withou function generator YXM 151, the basic field current reference i set with potentiometer "$I_1$"; jumper links S1:1-2, 3-4 must be inserted. For automatic field weakening above basic speed, the total current reference is reduced by bringing in a reference with the opposite sign (positive) via jumper link S3:1-2.

When function generator YXM 151 is fitted, the reference from the emf controller goes directly to the function generator (52.S3:1-2 removed), for difference generation. The sum curre reference is brought in at 52.X13:8, and potentiometer "$I_1$" is used to set the basic field current in this case as well (52.S1:3-4 removed and 52.S1:1-2 inserted).

5.5.7
Controlled field exciter YHBC, setting basic field current etc. (52, 53)

Check the jumper link settings against the table below; functions A1-B2 have the following meanings:

A1 = field current reversal
A2 = field current reversal with emf controller YXR 160
A3 = field current reversal with emf controller YXR 160 and function generator YXM 151
B1 = Opti-Torque
B2 = Opti-Torque with YXR 160 and YXM 151

| Jumper link | Function A1 | A2 | A3 | B1 | B2 |
|---|---|---|---|---|---|
| 52.S1:1-2 | X | X | X | | |
| 3-4 | X | X | | X | |
| 52.S3:1-2 | (X) | X | | | |
| 71.S1:5-6 | X | X | X | | |
| 7-8 | | | | X | X |
| 11-12 | | | | X | X |
| 13-14 | | | | X | X |
| 15-16 | X | X | X | | |
| 19-20 | | | | X | X |
| 23-24 | | | | X | X |
| 25-26 | X | X | X | | |

Turn the "time lag" potentiometer on YXN 118 fully anticlockwise (zero time lag).

Field current reversal

Switch on the convertor and set the basic field current with potentiometer "$I_1$" on YXT 117.

Check that the field exciter can supply current in both directions under forced control, for example by removing jumper link 71.S1:17-18 and connecting 71.X23:7 to +10 V (52.X22:3) for reverse current direction or to -10 V (52.X22:4) for forward current direction. Leave the forced control connection for forward current direction in position.

Opti-Torque

In this case potentiometer "$I_1$" on YXT 117 is used to give fiel current limiting. Before "$I_1$" can be adjusted, a high current reference must be simulated at YXN 118.

Remove jumper link 71.S1:17-18. Connect a variable voltage source (external potentiometer) to 71.X23:7.

Switch on the convertor and set -10 V at 71.X23:7. Turn the "GAIN" potentiometer on YXN 118 fully clockwise. Set the required basic field current with potentiometer "$I_1$" on YXT 117

Reduce the voltage at 71.X23:7 to exactly the armature current reference at which full field current is required to be reached Using the "GAIN" potentiometer on YXN 118, set the level at which the field current begins to drop slightly. Turn the external potentiometer so that the voltage changes sign. Check that the field current changes direction, and check the limitir level in the new direction.

5.6
Adjusting gain adaptation unit YXM 142 (30)

This unit is used to keep the gain of the speed control circuit constant. The gain can be controlled in three different ways:

1 Flux adaptation
2 External analog control
3 Gain switching

Check that jumper link S1:3-4 on speed controller YXR 162 is removed.

5.6.1
Flux adaptation

Check on YXM 142 that jumper links S1:1-2, S2:3-4 and S2:5-6 ar removed and that S2:1-2 is inserted. If the d.c. machine has a excitation curve that is relatively close to a straight line (e.g. ASEA type LAB) jumper links S3:1-2, 3-4 and 5-6 must be removed; if not, they must be inserted. The main contactor mus still be interlocked by means of a connection between 591.X26:1 and 0 V (591.X23:1).

Switch on the convertor. The field exciter must now deliver basic field current, and the field current signal must appear a 531.X2:6. Connect a voltmeter to 531.X21:3 and set the voltmeter reading to 10.0 V with potentiometer "G1".

Normally the speed controller gain increase is subject to a maximum of about 100 times at zero field current signal. This factor can be altered by means of R2 (normally 2.2 MΩ).

5.6.2
External analog control

Check on YXM 142 that jumper links S1:1-2, S2:1-2 and S2:5-6 are removed and that S2:3-4 is inserted. If the excitation curve of the d.c. machine is relatively close to a straight line (e.g. ASEA type LAB) jumper links S3:1-2, 3-4 and 5-6 must be removed; otherwise they must be inserted. Check that the external signal (maximum value) is present at 531.X1:6. Connect a voltmeter to 531.X21:3 and set the voltmeter reading to 10.0 V with potentiometer "G1".

For fully linear external control set "G1" for 8.0 V at X21:3 for maximum input signal (jumper links S3:1-2, 3-4, 5-6 inserted).

Normally the speed controller gain increase is subject to a maximum of about 100 times at zero field current signal. This factor can be altered by means of R2 (normally 2.2 MΩ).

5.6.3
Gain switching

Check on YXM 142 that jumper links S2:1-2, 3-4 are removed and that S1:1-2, S2:5-6 are inserted. Four different gains can now be selected via inputs X1:1, 2, 3 and 5. The input signals can be simulated by connecting X21:7, 6, 5 and 4 respectively to 0 V (591.X23:1). Connect a voltmeter to X21:3 and set the voltmeter reading to 10.0 V with potentiometer "G1" when X27:7 is connected to 0 V. This gives the lowest speed controller gain, and is used, for instance, for a load with the lowest moment of inertia.

Then set the other higher gains with "G2", G3" and "G4". For example, if a gain 4 times higher than in the first case is required, set 10/4 = 2.5 V at X21:3.

Gain switching can also be combined with flux adaptation or external analog control. For this, jumper link S2:5-6 is removed and jumper link S2:1-2 or S2:3-4 is inserted.

5.7
visional commissioning of speed control circuit (25)

The speed control circuit should be provisionally commissioned at this stage to make sure that the connection to the tachogenerator is working. This makes it easier to monitor the d.c. machine for overspeeding by means of overspeed protection or a voltmeter.

The instructions below are based on the assumption that the speed control circuit uses tachogenerator feedback, but where applicable the instructions can also be used for voltage feedback.

5.7.1
Preparations (25)

The convertor must be switched off. Remove the main contactor interlocking (591.X26:10). Make sure that the correct jumper links are inserted on the speed controller. Pay particular attention to the actual value circuit. Jumper link S1:7-8 (YXR 162 and YXR 163) must always be inserted, except with automatic field weakening by means of emf control. On YXR 162, jumper link S1:25-26 should be closed to prevent overshoot after limiting.

Calculate the tachogenerator voltage at maximum speed by using the equation:

$$U_{max} = k \times n_{max}$$

where k = 0.1 for type BD 2510
0.1 for type TDP 1306
0.06 for type REO 444
0.025 for type TGRB 1-5 A

If the overspeed protection is to be used as runaway protection during adjustment of the armature current control circuit, when automatic field weakening is fitted, $n_{max}$ should initially be set equal to base speed (the speed at which field weakening is to become operative).

Cut the strappings in the voltage divider for tachogenerator connection, as stated in the table below.

| Speed controller type | Tachogenerator voltage at max speed (V) | Strapping removed |
|---|---|---|
| YXR 162 | 10 | - |
| | 12.6 - 15.1 | I |
| | 14.3 - 18.5 | H, I |
| | 17.4 - 24.5 | G - I |
| | 22.7 - 35.0 | F - I |
| | 30.4 - 50.1 | E - I |
| | 43.9 - 76.8 | D - I |
| | 68.8 - 126 | C - I |
| | 106 - 199 | B - I |
| | 170 - 324 | A - I |
| YXR 163 | 10 | - |
| | 14.2 - 25 | D |
| | 23 - 57 | C, D |
| | 42 - 126 | B - D |
| | 99 - 338 | A - D |

Then set the armature current limit very low (turn potentiometers "LIM 1" and "LIM 2" on the speed controller anticlockwise). Turn the "GAIN" and "SIGN ADJ" potentiometers on the speed controller fully anticlockwise, and on YXR 162 turn the "TIME" and "PHASE LEAD" potentiometers fully anticlockwise. Finally turn the "GAIN" potentiometer on the armature current controller fully anticlockwise. If the convertor is fitted with overspeed monitor YXO 117 and overvoltage monitor YXO 126, set the tripping level on each of these units low (turn potentiometers anticlockwise).

Drive systems with torque reversal must be forcibly controlled to the forward torque direction by whichever of the following methods a) to c) is appropriate.

a) Double convertors YHMK, YHML:
Connect 515.X1:1 to -24 V (591.X23:2). Disable voltage adaptation by removing jumper link 515.S4:1-2.

b) Double field exciter YHBC:
Remove jumper link 71.S1:17-18. Connect 71.X23:7 to -10 V (52.X22:4) (full field current).

c) Field current reversal unit YXG 103:
Connect X22:10 on YXG 103 to -24 V (591:X23:2) or apply external forced control.

Connect a variable d.c. voltage from an external potentiometer to a spare unfiltered reference input on the speed controller.

Set a low positive reference. Connect a recorder or voltmeter to the speed actual value signal (X21:2 on YXR 162, X21:8 on YXR 163).

5.7.2
Checking direction of rotation

If the d.c. machine cannot be seen or heard, position an assistant to warn of runaway of the machine.

Switch on the convertor, but be prepared to press OFF immediately if there is a tendency to run away. If the d.c. machine runs away, the tachogenerator or field winding connections are reversed (when there is any tachogenerator voltage at all).

If there is runaway in the correct direction of rotation, the polarity of the speed signal is wrong. Reverse the tachogenerator connections.

If there is runaway in the wrong direction of rotation, the polarity of the field current is wrong. Reverse the connections to the field winding.

If the d.c. machine can be controlled continuously with the potentiometer, but rotates in the wrong direction, reverse the connections both to the tachogenerator and to the field winding

If the d.c. machine has a series winding, check that the series winding is not opposed. Measure the voltages across S1-S2 and F1-F2. S1 and F1 must have the same polarity.

Where overspeed or overvoltage monitors are fitted, check by slowly increasing the speed reference that they can trip the convertor.

Tachogenerator alignment can be checked by using a recorder to record accurately the speed actual value and by checking that there is no speeed-dependent impressed a.c. voltage.

5.7.3
Setting the d.c. voltage transducer

When d.c. voltage transducer YXC 110 is fitted, it must be adjusted. Connect a voltmeter to the voltage input of YXC 110, terminals X1:1 and X1:3. Turn the "COMP 1" and "COMP 2" potentiometers fully anticlockwise. Set the speed to give 100% emf on the voltmeter. The overspeed monitor and overvoltage monitor can temporarily be set high so that the convertor does not trip. The adjustment may be made at a lower voltage, but this gives lower accuracy.

If terminal AB (terminal K) of the d.c. machine is to be used for compensation, check by voltage measurement that the circuit is connected as shown in Figure 5-3.

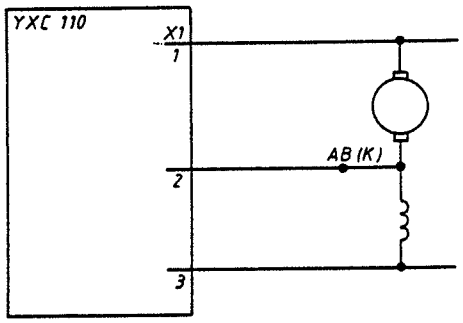


Fig 5-3

The voltage X1:1-X1:3 must be slightly higher than the voltage X1:1-X1:2.

Using the "GAIN" potentiometer, set the voltage at X21:1 to -10.0 V (for positive speed reference and max emf). If the sign is wrong, change it by operating switch S1.

## 5.8
## Adjustment of armature current control circuit

### 5.8.1
### Connection and preliminary adjustment (25, 31, 35)

The armature control circuit must be adjusted with the d.c. machine stationary and the field winding disconnected. For adjustable and controlled field exciters, temporarily insert jumper link 591.S1:3-4 to prevent tripping at high field current.

Connect a voltmeter to the speed reference to check that the machine does not start to rotate.

Make sure the convertor is off, and disconnect the field excite by unscrewing the field exciter fuses. Connect the acknowledgement signal from the field exciter by strapping 591.X23:9 to +10 V (591.X23:7). Leave the external potentiometer connected to an unfiltered input on the speed controller.

Set a low positive voltage. Set the speed controller for P-action by inserting jumper link S1:3-4 on YXR 163 and removin jumper link S2:3-4 on YXR 162.

Provisionally set the current limits "LIM 1" and "LIM 2" on the scale to a level corresponding to the rated current of the d.c. machine. The level of the speed controller output signal CUR REF 1-1 is normally such that 5 V corresponds to $I_{dmN1}$. If the rated direct current of the convertor is much greater than that of the d.c. machine, the level of the current reference ca be adjusted upwards by reducing actual value resistor R205 (see circuit diagram sheet 35 and Figure 4-2 in YT 280-103 E). Note that the level of the current actual value signal ARM CUR 1 mus not be altered, since this would alter the settings of the overload monitor and would change the ammeter reading.

Switch on the convertor and turn up the reference potentiometer to give rated current for a moment; check that the armature of the d.c. machine remains stationary. Keep the speed monitor voltmeter constantly under observation while adjusting the armature control circuit. If the machine rotates, the armature must be locked in an appropriate manner. See also Section 3.2 item D.

Remember: Do not allow the current to flow for more than 10 seconds; allow time for cooling, and turn the armature between operations.

For correct adjustment of the current control circuit, the current must exceed the continuous current limit (continuous current means that the direct current is always greater than zero). For most d.c. machines this limit is lower than rated current. If it is found during the following procedures that the limit is higher than the rated current of the machine, the current limits "LIM 1" and "LIM 2" must be raised.

If the limit for continuous current is < 10% of $I_{dmN1}$, R194 for the current indication flipflop must be changed to 180 ohm, and if the limit is > 70%, the resistor must be changed to 680 ohm.

5.8.2
Adjusting the gain (35)

Two methods of adjusting the current control circuit are described here, one with a voltmeter and the other with a recorder.
The first method is satisfactory for most drives. To optimise the control system a recorder must be used.

5.8.2.1
Setting the gain with a voltmeter

Establish first the limit for continuous current. Connect a voltmeter (range 15 V d.c. approx.) to the current indication flipflop, 591.X22:9. Increase the current slowly from zero. The voltmeter reading will now change in the negative direction as the current increases. The limit for continuous current is situated at the current where the reading no longer changes (about -13 V). Note the ammeter reading or measure the level of the current signal 591.X24:7.

Connect the voltmeter (range 10 V a.c. approx.) in series with a capacitor ($\geq$ 2 µF) between the current signal (591.X24:7) and 0 V (591.X23:1). Leave the "GAIN" potentiometer on YXT 115 in the minimum position, and set a reference which makes the armature current exceed the continuous current limit by about 20%.

Turn the "GAIN" potentiometer clockwise until the voltmeter reading starts to increase. The current control circuit is now at the self-oscillation limit. Turn back the potentiometer by a factor of 2 on the scale on the PCB. Note that the minimum position is not shown, and that it gives a gain of about 0.2. If self-oscillation cannot be obtained, even with the "GAIN" potentiometer turned to the maximum position, set the potentiometer to 4.

5.8.2.2
Setting the gain with a recorder

Establish first the limit for continuous current. Connect one channel of the recorder (2 V/mm approx.) to the current indication flipflop, 591.X22:9. Slowly increase the current from zero. The recorder reading will now change in the negative direction as the current increases. The continuous current limit is situated at the current at which the negative recorder reading becomes stable (-13 V approx.) without pulses. Note the ammeter reading or measure the current signal 591.X24:7.

Connect one channel of the recorder to the current signal 591.X24:7, and the other channel to the current signal 591.X22:8. A stepping unit such as test unit YXO 115 must now be used to give a variable d.c. voltage. The unit should be connected to an unfiltered input on the speed controller. Leave the "GAIN" potentiometer on YXT 115 in the minimum position.

Using the stepping unit, set a basic reference to give an armature current about 20% above the continuous current limit. Make small step changes in the reference signal (about 0.3 V) a 591.X22:8. Turn the "GAIN" potentiometer clockwise until a small overshoot (about 10% of the step magnitude) is obtained i the current signal. Unless extremely fast control is needed, the gain should be reduced from this setting by a factor of 2 o the "GAIN" scale. Note that the minimum position is not shown, and that it gives a gain of about 0.2.

5.8.3
Maximising the rate of change of the armature current (34)

The commutator of a d.c. machine may be damaged if the armature current changes too rapidly. The maximum permitted rate of change, dI/dt, is specified by the machine manufacturer. The convertor limits dI/dt indirectly by means of limiting circuits in the reference summator (sheet 34 of the circuit diagram). Normally R193 = 150 kohm, giving a dI/dt of max 20 x $I_{dmN1}$ per second.

If the d.c. machine can withstand a higher dI/dt and if rapid control is required, R193 can be altered. See Figs 4-16 and 4- of YT 280-103 E. After changing the resistor, check the result by instantaneously increasing the current reference from 10% tc 100% of rated current, and recording the current signal 591.X24:7 on a recorder.

5.9
Setting the compensation on d.c. voltage transducer YXC 110 (49)

When the d.c. voltage transducer is used for speed control via armature voltage feedback, no compensation must be used. The instructions below are for measurement of the emf of the d.c. machine.

Retain the connections used in Section 5.8, with the field exciter disconnected, the speed controller wired for P-action, and a potentiometer/stepping unit to give an armature current reference.

The emf actual value signal has already been set to 10.0 V for max emf, and the setting of the "GAIN" potentiometer on YXC 11( should therefore not be altered. There are three ways of compensating for the voltage drop in the d.c. machine:

1 Compensation of the static voltage drop via the current actual value signal.
2 Compensation of the static voltage drop via the AB-terminal (K-terminal) of the d.c. machine.
3 Compensation of static and dynamic voltage drop.

When the speed is zero the emf is also zero, and the input voltage to the d.c. voltage transducer is made up entirely of the armature voltage drop of the d.c. machine.

Remember: Do not allow the current to flow for more than 10 s allow time for cooling and turn the armature between operation

5.9.1
Compensation of the static voltage drop via the current signal

Connect a voltmeter to the emf signal X21:1 on YXC 110, and set an armature current equal to the rated current of the d.c. machine, for example. Turn the "COMP 2" potentiometer clockwise until the voltmeter reads zero.

Remove jumper link S4:1-2 if the range is not sufficient. On double convertors (YHMK, YHML) temporarily disconnect the forced control to 515.X1:1. Reverse the direction of the armature current and check that the voltmeter reading is still zero. Restore the forced control connection.

5.9.2
Compensating the static voltage drop via the AB-terminal (K-terminal) of the d.c. machine

Connect a voltmeter to the emf signal X21:1 on YXC 110, and set an armature current equal to the rated current of the d.c. machine, for example. Turn the "COMP 1" potentiometer clockwise until the voltmeter reads zero. Remove jumper link S3:1-2 if the range is not sufficient.

N.B. Jumper link S3:1-2 is in the primary circuit of the d.c. voltage transducer. The convertor must therefore be switched off before the safety screen is removed to take out the jumper link.

On double convertors (YHMK, YHML) temporarily disconnect the forced control to 515.X1:1. Reverse the direction of the armature current and check that the voltmeter reading is still zero. Restore the forced control connection.

5.9.3
Compensation of both static and dynamic voltage drop

The static voltage drop is compensated mainly via the armature current signal, and the dynamic voltage drop via the AB-terminal (K-terminal) of the d.c. machine.

Connect one channel of a recorder to the emf signal X21:1 on YXC 110 and the other channel to the current signal 591.X24:7. Apply instantaneous steps to the current reference, e.g. 10-100% of the rated current of the d.c. machine. Turn the "COMP 1" potentiometer clockwise until the dynamic error on the emf signal is zero (and the static error has decreased). The waveform of the emf signal should now be approximately the same as the waveform of the current signal.

Now turn the "COMP 2" potentiometer clockwise to make the static error zero as well.

On double convertors (YHMK, YHML) temporarily disconnect the forced control to 515.X1:1. Apply steps to the opposite-sign reference signal, and check that the emf signal is still zero. Restore the forced control connection.

5.10
Adjusting armature current limiting (25)

With the convertor switched off, connect a variable d.c. voltag to a spare unfiltered reference input on the speed controller. Re-connect the integrating circuit on the speed controller by removing jumper link S1:3-4 on YXR 163 and inserting jumper lin S2:3-4 on YXR 162.

Calculate the armature current reference voltage at which armature current limiting is required. $I_{dmN1}$ corresponds to 5 if current actual value resistor R205 has not been changed (normally 180 kohm). On YXR 162, turn the "GAIN" potentiometer to 2 to obtain sufficient signal level.

Set a positive speed reference so that the output signal of the speed controller (armature current reference), X23:5 on YXR 162 and X21:6 on YXR 163, is limited in the negative direction. Se the required limiting level corresponding to the driving torque in the forward direction with potentiometer "LIM 2".

Set a negative speed reference so that the output signal of the speed controller is limited in the positive direction.

If the convertor is for one torque direction only, set the limiting level to +0.3 V with potentiometer "LIM 1".

If the convertor is for reversible torque direction, temporaril set +0.3 V in this case as well. The final adjustment, corresponding to the braking torque in the forward direction or driving torque in the reverse direction is not made until the adjustment described in Section 5.13.

## 5.11
## Adjusting the speed control circuit

### 5.11.1
### Preparations

The convertor must be switched off (and the load switch must be open). Insert the field exciter fuses and remove the field current acknowledgement connection, 591.X23:9. For an adjustable or controlled field exciter, remove jumper link 591.S1:3-4.

If the d.c. machine armature is locked, remove the locking. If the driven machine has been disconnected from the armature shaft, it may now be connected. However, if the driven machine cannot withstand running at high speeds, it is advisable to leave the coupling of the armature shaft until the overspeed monitor has been set as described in Sections 5.11.2 and 5.11.3.

Check lubrication and oil levels. Note that the driven machine should be under no-load conditions during adjustment of the speed control circuit.

Keep the variable d.c. voltage connected to a spare unfiltered input on the speed controller.

Set a low positive reference and switch on the convertor. Be ready to switch off immediately if the d.c. machine runs away.

Check that the speed is continuously controllable for low positive references.

If the convertor has overvoltage and overspeed monitors, the tripping levels of these must be increased to maximum (potentiometers turned fully clockwise).

5.11.2
Adjustment of voltage dividers for tachogenerator voltage, overvoltage monitor and overspeed monitor

5.11.2.1
Field exciter with constant field current

Voltage divider (25)

Connect a voltmeter to measure the tachogenerator voltage at terminals B50.X25:1-3, or directly to X1:1-3 on the speed controller. Increase the speed reference to maximum (normally 10.0 V) while observing the tachogenerator voltage and the emf (voltmeter on the cubicle door or external voltmeter). Do not exceed maximum speed or maximum emf.

If the emf goes too high, the field current must be reduced, or a lower maximum speed must be accepted. With a diode field exciter and a cold machine, the emf will temporarily be too high. Allow the field winding to warm up before carrying out the check. (If the field current is changed, it may also be necessary to readjust $I_F<$ and $I_F>$; see Section 5.5.)

When the maximum speed reference has been set, use the "SIGN ADJ" potentiometer on the speed controller and adjust the tachogenerator voltage to the maximum value previously calculated in Section 5.7.1. Check that there is sufficient margin for armature voltage drop, in addition to the emf, up to the maximum voltage of the d.c. machine and armature convertor. Normally the static armature voltage drop is 10-60 V at rated current.

If the convertor can deliver a higher voltage than the maximum voltage of the d.c. machine, the convertor voltage $U_d$ should be limited, at least if there is no overvoltage monitor. This is done by limiting current controller output voltage $U_s$ with R192 See Figure 4-14 in YT 280-103 E, and the following equation:

$$U_s = 5.9 \times \frac{U_d}{U_{vN}} \qquad \text{where } U_{vN} = \text{mains voltage}$$

Normally limiting is at +8.7 V and -8.0 V, so that the entire possible control range is used.

Overvoltage monitor (49)

When overvoltage monitor YXO 126 is fitted, it must be adjusted Turn the speed reference down to zero and temporarily connect two reference inputs in parallel to the external potentiometer.

Increase the speed reference to give the required tripping voltage. A suitable setting is about 110% of the highest normally occurring armature voltage. If the convertor trips for overspeed before that, disable the overspeed protection by temporarily inserting jumper link 591.S1:15-16.

Turn the "LEVEL" potentiometer on YXO 126 slowly anticlockwise until the convertor trips. If convertor indication unit YXO 122 and a fault indication display are included, check the fault indication as well.

If jumper link 591.S1:15-16 is inserted, remove it now. If the overspeed monitor is fitted, leave the double reference inputs. If not, disconnect one of them.

Overspeed monitor (27)

If overspeed monitor YXO 117 is fitted, it must be adjusted. Temporarily connect two reference inputs in parallel to the external potentiometer, unless this has already been done.

Increase the speed reference so that the tachogenerator voltage rises to the level at which tripping is required (normally about 10% above maximum operating speed). If overvoltage tripping occurs before that, disable the overvoltage monitor by temporarily inserting jumper link 591.S1:9-10.

Check by measurement on YXO 117, 766.X21:4, that the speed signal is also 10% above maximum operating speed. Turn the "LEVEL" potentiometer on YXO 117 slowly anticlockwise until the convertor is tripped. Check also the fault indication on YXO 117 and the fault indication display if fitted.

If jumper link 591.S1:9-10 is inserted, remove it now. Disconnect one of the reference inputs.

5.11.2.2
Field exciter with automatic field weakening

Voltage divider (25)

If the voltage divider was previously connected for the tachogenerator voltage for a low speed, the coarse adjustment set out in the table in Section 5.7.1 must now be made.

The field current must be reduced in this case to allow maximum speed to be reached. A connection must therefore be made on the field exciter between terminals 52.X1:2 and 52.X1:4. Use the voltmeter on the door or an external voltmeter to measure the emf. Connect a voltmeter to the tachogenerator voltage at terminals B50.X25:1-3 or directly to X1:1-3 on the speed controller.

Increase the speed reference to give full emf. Reduce the field current by turning the potentiometer "$I_2$" on YXT 117 clockwise. The emf will now drop, and the drop must be large enough to enable the maximum speed reference (normally 10.0 V) to be given without the maximum emf being exceeded. When this has been set, use the "SIGN ADJ" potentiometer on the speed controller to adjust the tachogenerator voltage to a level corresponding to maximum speed, as already calculated in Section 5.7.1.

If the convertor can deliver a higher voltage than the maximum voltage of the d.c. machine, the convertor voltage $U_d$ should be limited, at least if there is no overvoltage monitor. This is done by limiting current controller output voltage $U_s$ with R192. See Figure 4-14 in YT 280-103 E, and the following equation:

$$U_s = 5.9 \times \frac{U_d}{U_{vN}} \qquad \text{where } U_{vN} = \text{mains voltage}$$

Normally limiting is at +8.7 V and -8.0 V, so that the entire possible control range is used.

If an overvoltage monitor or an overspeed monitor is fitted, keep the above adjustment. Otherwise go on to "Reinstatement".

Overvoltage monitor (49)

When overvoltage monitor YXO 126 is fitted, it must be adjusted. To prevent field weakening, temporarily remove jumper link 52.S3:1-2 on the field exciter or, if function generator YXM 151 is fitted, jumper link 54.S1:3-4.

Apply the maximum speed reference; see the section headed "Voltage divider". Turn the potentiometer "$I_2$" on YXT 117 anticlockwise to give the required tripping voltage. A suitable setting is about 110% of the highest normally occurring armature voltage.

Turn the "LEVEL" potentiometer on YXO 126 slowly anticlockwise until the convertor is tripped. If convertor indication unit YXO 122 and a fault indication display are fitted, check the fault indication.

If an overspeed monitor is fitted, keep the above adjustment. Otherwise go on to "Reinstatement".

8

Overspeed monitor (27)

If overspeed monitor YXO 117 is fitted, it must be adjusted. Turn down the speed reference to zero and temporarily connect two reference inputs in parallel to the external potentiometer. Reduce the field current slightly by turning potentiometer "$I_2$" on YXT 117 clockwise so that the emf does not go too high when the speed increases. Increase the speed reference so that the tachogenerator voltage rises to the level at which tripping is required (normally about 10% above maximum operating speed).

Check by measurement on YXO 117, 766.X21:4, that the speed signal is also 10% above maximum operating speed. Turn the "LEVEL" potentiometer on YXO 117 slowly anticlockwise until the convertor trips. Check the fault indication on YXO 117, and on the fault indication display if fitted.

Reinstatement (52)

Switch off the convertor and turn the "$I_2$" potentiometer on YXT 117 fully anticlockwise. Remove the connection 52.X1:2-52.X1:4.

If jumper link 52.S3:1-2 or 54.S1:3-4 has been removed, insert it.

If double reference inputs have been used, disconnect one of them.

5.11.3
Adjusting the speed control circuit with a voltmeter (25)

This method is satisfactory where the control performance requirements are not particularly strict. A chart recorder must be used if there are strict requirements; see Sections 5.11.4 and, where applicable, 5.11.5.

The speed control circuit is always adjusted at a level below base speed. With automatic field weakening it is important not to give such a high reference that the maximum armature voltage is exceeded, since the field weakening circuit has not yet been adjusted. Connect a voltmeter (range about 10 V d.c.) to the armature current reference 747.X23:5 for YXR 162 or 750.X21:6 for YXR 163 (speed controller output signal).

Proportional gain

Set a speed reference that gives about 70% of base speed. The voltmeter should now give a low, stable negative voltage reading.

Turn the "GAIN" potentiometer on the speed controller clockwise until the pointer begins to hunt. The speed control circuit is now self-oscillating because the gain is too high. Turn back "GAIN" by a factor of 4 on the scale of the PCB.

Integration time

On YXR 162 the integration time can be set with the "TIME" potentiometer; on YXR 163 capacitors C14 and C15 must be changed. In most cases there is no need to adjust the integration time; the response speed obtained by adjusting the proportional gain is usually sufficient.

The procedure for setting the integration time is the same as for adjusting "GAIN". On YXR 162 the "TIME" potentiometer is turned clockwise, and YXR 163 the capacitance of C14, C15 is reduced, until the pointer begins to hunt. At his point, increase the integration time by a factor of 4.

Check the commutation of the d.c. machine for a rapid speed change from 60 to 70% of base speed. There should be no excessive sparking. The commutation characteristics are described in OK 00-108 E.

5.11.4
Adjusting the speed control circuit with a recorder (normal control response) (25)

A stepping unit such as test unit YXO 115 must be used as a variable d.c. voltage source. The connection to the spare unfiltered input on the speed controller must be kept. Connect one channel of the recorder to the current signal 591.X24:7, and the other channel to the speed signal X21:2 on YXR 162, X21:8 on YXR 163.

The speed control circuit is always adjusted at a level below base speed. With automatic field weakening it is important not to give such a high reference that the maximum armature voltage is exceeded, since the field weakening circuit has not yet been adjusted.

Set a basic reference of about 20% of base speed. Apply steps of about 0.5-3% of base speed. Check continuously that the current limiting level is not reached.

Proportional gain

For each step test, turn the "GAIN" potentiometer clockwise by a factor of about 2 on the scale on the PCB. This will bring the speed signal up to the correct level more quickly. The gain is correctly adjusted when there is an overshoot of about 5% of the step.

Integration time

8

On YXR 162 the integration time can be set with the "TIME" potentiometer; on YXR 163 capacitors C14 and C15 must be changed. In most cases there is no need to adjust the integration time; the response speed obtained by adjusting the proportional gain is usually sufficient.

Apply steps as above, and reduce the integration time by a factor of 2. On YXR 162 turn the "TIME" potentiometer clockwise, and on YXR 163 halve the capacitance of C14, C15. Continue reducing the integration time until there is a distinct change in the step response. Then increase the time by a factor of 2.

Check the commutation of the d.c. machine for large step speed changes (about 10% of base speed). There should be no excessive sparking. The commutation characteristics are described in OK 00-108 E.

Note that when the current reference changes sign, for double convertors YHMK, YHML and for reversable field current direction, the final adjustment cannot be made until any armature shaft locking has been removed, and the adjustments described in Section 5.13 have been made.

5.11.5
Adjustment of the speed control circuit in systems with a fast control response

A recorder must be used. This method is particularly well suited for drives in which rapid response to load disturbances is required.

If speed controller type YXR 163 is used, first disconnect resistor R40.

Adjust the proportional gain to 5-10% overshoot; see Section 5.11.4. Then adjust the integration time to increase the overshoot to 30-50%.

Now reduce the overshoot by introducing a derivative function into the actual value circuit. On YXR 162 this is done by turning the "PHASE LEAD" potentiometer clockwise. YXR 163 has a certain amount of derivative function in its standard form; this is determined by R40. Connect R40 and then increase the derivative function by reducing the resistance of R40.

The result should be as follows:
Rise time 50-100 ms, normally 100 ms.
Overshoot normally less than 5%.

## 5.12
## Adjustment of automatic field weakening

### 5.12.1
### Speed controlled field weakening (51, 52)

If the excitation curve of the d.c. machine is relatively straight (e.g. ASEA type LAB) jumper link S1:1-2 on YXM 152 must be inserted; if not, it must be removed.

Carry out an initial adjustment to standardise to the set field current. Have the convertor switched on, and run the machine at a speed below base speed. Measure the set field current reference at X21:10 on YXT 117 with a voltmeter, and note the reading.

Switch off the convertor and connect -10 V (52.X22:4) to 51.X21:2. Connect the voltmeter to 51.X21:5 and set the voltmeter reading to +10.0 V with the "SLOPE 4" potentiometer. Move the voltmeter connection to 52.X21:5, and, using the "LEVEL" potentiometer, set the voltmeter to the voltage previously noted for the current reference. Remove the connection to 51.X21:2 and turn "SLOPE 4" fully anticlockwise.

This type of field weakening gives a larger control error than conventional emf control. This must be borne in mind when selecting 100% emf level, so that the maximum permitted armature voltage of the d.c. machine is not exceeded.

Switch on the convertor and increase the speed so that the emf rises to 100%. Use the voltmeter in the cubicle door, or an external voltmeter. Turn the "GAIN" potentiometer on YXM 152 clockwise to reduced the emf to 98%.

Slowly increase the speed reference. It is important always to increase the speed, <u>and never to reduce it at any time during the following adjustment</u>. If the potentiometer is turned too far at any time, the procedure must be re-started from the beginning.

The emf will now rise slightly to begin with, and then drop. When it has dropped to about 90%, stop increasing the speed and turn the "SLOPE 1" potentiometer slowly clockwise to bring the emf up to about 95% again.

Increase the speed reference again until the emf has been reduced to 90%. Turn "SLOPE 2" to bring the emf back up to 95%

Repeat this procedure with "SLOPE 3" and "SLOPE 4" until the required maximum speed is reached. If the emf is considerably below 95% at this point (which may happen if the field weakening is severe), "SLOPE 1-4" will have to be re-adjusted from the beginning, and a lower minimum emf value will have to be used, for instance 85% instead of 90%.

Then run slowly through the entire speed range, increasing and decreasing the speed and checking the emf level. The variation should remain within the range 5-10%. The emf will always be higher during speed increase than during speed reduction, owing to the hysteresis of the excitation circuit of the d.c. machine.

If there are fast accelerations in normal service, the emf should be investigated with a recorder while the d.c. machine is accelerated with the fastest ramp reference function used. If the overshoot is excessive on transition to the weakened-field region, the emf level must be reduced.

5.12.2
Field weakening by emf control (51, 52)

During these adjustments the emf must be set to a low level. Set a speed reference to give an emf of 85%. Use the voltmeter on the door or an external voltmeter to measure the emf. Turn potentiometer "R36" on the emf controller YXR 160 anticlockwise until the emf drops to 80%. Increase the speed reference slowly until maximum speed is reached. Check that the emf remains constantly at 80%.

A recorder is needed for adjustment of the emf control circuit. Connect one channel to the emf signal 51.X21:1, and the other to the field current signal 52.X21:6. Set the speed to about 80% of maximum. Connect a stepping device set to 0 V, preferably to 51.X21:9, to apply steps to the emf reference. Apply steps equivalent to an emf change of about 5%. Increase the gain of the emf control circuit with the "GAIN" potentiometer until an overshoot appears on the emf signal. Then turn back "GAIN" by a factor of about 2 on the scale on the PCB.

It is not normally necessary to adjust the integration time, but if very fast control is required, the effect of reducing capacitor C14 may be tried.

Check the result by making step changes in the speed reference and studying the emf signal. The disturbances on the emf signal should be as small as possible. In addition, check the emf signal on acceleration with the fastest ramp reference function used or, where applicable, with the speed controller at current limit. Pay particular attention to the weakened field region, to ensure that the overshoot does not become excessive. It should not exceed about 5%, and can be reduced by introducing a derivation function on the emf signal. The emf controller will then start to reduce the field current slightly before the set emf level is reached. To increase the derivation function, turn the "PHASE LEAD" potentiometer clockwise.

When adjustment is complete, disconnect the stepping unit from 51.X21:9. Set maximum speed and turn the emf up to 100% with potentiometer "R36".

## 5.13
## Settings with reversible torque direction

### 5.13.1
### Double convertors in the armature circuit (YHMK, YHML) (25, 35, 36)

Remove the connection for forced control 515-X1:1, and set the "LIM 1" potentiometer as described in Section 5.10. Run the d.c. machine over the entire speed range and check that the machine is retarded when the speed reference is reduced. Where applicable, check that the ammeter gives a reading in both directions, for driving and for braking.

Normally it is not necessary to discharge the integration capacitor on the speed controller on reversal, but if the transition to high torque in the opposite direction is required to be quick, insert jumper link 747.S2:9-10 on YXR 162, or 750.S1:1-2 on YXR 163.

Voltage adaptation

At an earlier stage in the commissioning procedure the voltage adaptation circuit of the current controller was disabled by removing jumper link 515.S4:1-2 on YXN 116. If current reversa is not required to be particularly quick, the jumper link can b left out, and there is therefore no need to adjust the voltage adaptation circuit. Note that the jumper link must be removed for speed controlled field weakening. This is because the inpu signal in this case is the speed signal, and this is not proportional to the emf over the entire range.

If the input signal (515.X22:5) is 10 V for max emf (speed), it must be adapted with resistor R65 on YXN 116. R65 may be selected with reference to Figure 4-18 in YT 280-103 E. When changing the resistor, note that the voltage at 515.X22:1 is 6. V approx. for max emf. Where max emf is lower than the rated d.c. voltage $U_{dN}$ of the convertor, the value of R65 must be reduced by the factor max emf/$U_{dN}$. In this case the voltage at 515.X22:1 will be correspondingly lower.

Reduce the speed to near zero and insert jumper link 515.S4:1-2 Connect one channel of a recorder to the current signal 591.X24:7, and the other channel to the current controller output 591.X22:1. Check that the "HYST" and "MATCH LEVEL" potentiometers on YXN 116 are turned fully anticlockwise. Run the d.c. machine at a low speed first, and apply small steps to the speed reference. The steps must be as small as possible, but large enough to give current reversal.

The current controller is driven towards its negative limit at each reversal, and is then forcibly controlled up towards the intervention level by the voltage adaptation circuits. Check that there are no large current surges on release in either of the two current directions.

Increase the speed to give max emf, and check the current surges in the same way. Reduce the distance to the intervention level by turning "MATCH LEVEL" clockwise. The adjustment is correct when the current after release is extremely low. Check both directions.

Hysteresis

If current reversal is not required for a small sign change in the current reference, the sensitivity can be reduced by increasing the hysteresis of the reversal flipflop on blocking unit YXN 116. To do this, turn the "HYST" potentiometer clockwise relative to the scale on the PCB.

If a fast control response is required, the speed control circuit should be adjusted as described in Sections 5.11.4-5. Even if the control response requirements are not particularly strict, it is advisable at least to check that there is no hunting on the current reference, as mentioned in Section 5.11.3.

5.13.2
Field current reversal (25, 53)

The field current reversal unit may be fitted together with a diode field exciter or an adjustable field exciter. The direction of the field current is controlled by the sign of the armature current reference, unless forced control is used.

When speed controller YXR 162 is used, the integration value is automatically maintained during reversal. Jumper links 747.S2:9-10 should normally be open.

Speed controller YXR 163, jumper link 750.S1:1-2 should normally be inserted, to ensure that the integration capacitor is not excessively charged during field current reversal.

Remove the strapping to X22:10 on YXG 103. If the armature current reference is being used for control, set the "LIM 1" potentiometer as described in Section 5.10. Make changes in the speed reference and check that the reversal times are reasonable (0.5-3 s) by measuring the phase advance signal from the field exciter (591.X24:9).

If a fast control response is required, the speed control circuit should be adjusted as described in Sections 5.11.4-5. Even if the control response requirements are not particularly strict, it is advisable at least to check that there is no hunting on the current reference, as mentioned in Section 5.11.3.

If reversal is not required for a small sign change in the armature current reference, the sensitivity can be reduced by increasing the hysteresis the reversal flipflop on YXG 103. To do this, turn the "HYST" potentiometer clockwise relative to the scale on the PCB.

5.13.3
Double convertors in the field circuit (YHBC) (25, 53)

Blocking unit YXO 118 can be wired either for "Field reversal" or for "Opti-Torque". Remove the strapping to 71.X23:7 and insert jumper link 71.S1:17-18.

With armature current reference control, set the "LIM 1" potentiometer as described in Section 5.10.

Field reversal

The direction of the field current is determined by the sign of the armature current reference, unless forced control is used.

When speed controller YXR 162 is used, the integration value is automatically maintained during reversal. Jumper links 747.S2:9-10 should normally be open. Speed controller YXR 163, jumper link 750.S1:1-2 should normally be inserted, to ensure that the integration capacitor is not excessively charged durin field current reversal.

If the armature current reference is being used for control, ma changes in the speed reference and check that the reversal time are reasonable (0.5-3 s) by measuring the phase advance signal from the field exciter (591.X24:9) or the field current signal.

If a fast control response is required, the speed control circuit should be adjusted as described in Sections 5.11.4-5. Even if the control response requirements are not particularly strict, it is advisable at least to check that there is no hunting on the current reference, as mentioned in Section 5.11.3.

If reversal is not required for a small sign change in the armature current reference, the sensitivity can be reduced by increasing the hysteresis of the reversal flipflop on YXO 118. To do this, turn the "HYST" potentiometer clockwise relative tc the scale on the PCB.

Opti-Torque

Jumper link 747.S2:9-10 on speed controller YXR 162 should normally be removed, but it is important that jumper link 747.S1:25-26 is inserted, since the controller output signal is limited for long periods when the Opti-Torque system is used.

8 Check that control is possible over the entire speed range. Measure the speed signal and armature current reference with a recorder, and apply small and large steps to the speed reference. Check the control response. If necessary, readjust the speed control circuit; see Sections 5.11.4-5.
It is of particular importance with Opti-torque drift that the speed of the armature current control be so high that the control voltage can take effect when the EMF changes.

A d.c. machine has a time-constant from field current to flux, known as the eddy-current time-constant. When the direction of torque is reversed at a particular speed by reversing the direction of field current, the machine will be driven with a torque of the wrong sign until the flux has also changed sign. The effect of this is that the speed increase during an acceleration continues after the field current has changed sign and full armature current has been reached. To prevent this it is possible to delay release of the armature current controller by turning the "TIME LAG" potentiometer on YXN 118 clockwise.

Accelerate and retard the d.c. machine and use a recorder to study the speed signal and armature current reference.

5.14
.ing and testing protection and monitoring functions

The following functions must, if fitted, already have been adjusted and tested:

| | Symbol | Section |
|---|---|---|
| Phase sequence monitor YXO 116 | Y↷ | 5.3.1 |
| Fan monitor | ⊚ ⊦ | 5.3.3 |
| Low field current protection | ⊠I< | 5.5 |
| High field current protection | ⊠I> | 5.5 |
| Armature overvoltage monitor YXO 126 | ⊖U> | 5.11.2 |
| Overspeed monitor YXO 117 | ⊖n> | 5.11.2 |

5.14.1
Monitoring the mains voltage, YXO 116, ~U< (32)

The convertor must be switched on.

Turn the "LEVEL" potentiometer on YXO 116 fully clockwise. The convertor should now be tripped, unless the voltage of the supply system is extremely high. If so, 541.X21:10 may be connected to 0 V (591.X23:1).

In addition, check the fault indication on YXO 116 and on the fault indication display if fitted.

Set the required tripping level on the scale on the PCB (normally 80%).

5.14.2
Monitoring the armature current level, YXO 119, Ⓜ I> (32)

The convertor must be switched off.

Simulate a current actual value signal (negative voltage) by connecting a variable d.c. voltage from an external potentiometer to 591.X24:2. Normally the tripping level is set in about 15% above the current reference limiting level set in Section 5.10. If R205 on YXT 115 has not been changed to adjust the scale factor of the reference, the current actual value $U_{Iact}$ can be calculated from the following equation:

$$U_{Iact} = \frac{U_{Iref} \times 1.15}{2} \qquad (V)$$

where $U_{Iref}$ is the current reference limiting level.

Connect a voltmeter to the current actual value signal 591.X24:7 and use the external potentiometer to set a voltage such that the voltmeter reading is the calculated voltage $U_{Iact}$ (positive). Turn potentiometer "$I_d/I_{dmN1}$" on YXO 119 slowly anticlockwise until the convertor is tripped. In addition, check the fault indication on YXO 119 and on the fault indication display if fitted.

5.14.3
Monitoring of pulsations on the armature current, YXO 119, Ⓜ $I_n$> (32)

The convertor must be switched off.

Simulate a fault by connecting 556.X21:8 to 0 V (591.X23:1). Check the fault indication on YXO 116 and on the fault indication display if fitted.

5.14.4.1
Overload protection, YXO 124, Ⓜ ⏀ (34)

The convertor must be switched off.

The protection must be set for whichever of the following drive system components has the lowest rated current $I_d$: d.c. machine, d.c. cables or convertor. The factory setting is the convertor rated current, and this generally means that the mains connection equipment of the convertor (main contactor, load switch etc.) are the items that decide the current rating. See rating plate.

The procedure for setting the overload protection is as follows:

8 Select tripping curve a, b or c (see Section 4.4.4 of YT 280-103 E) and insert the appropriate jumper link.

Curve a S1:1-2
Curve b S1:3-4
Curve c S1:5-6

Remove jumper link 548.S2:1-2. Simulate a current actual value signal (negative voltge) by connecting a variable d.c. voltage from an external potentiometer to 591.X24:2. Calculate the current actual value $U_I$ as follows:

$$U_I = 2.5 \times \frac{I_d \times 1.05}{I_{dmN1}} \quad (V)$$

where $I_d$ = the current for which a setting is required, e.g. the rated current of the d.c. machine

$I_{dmN1}$ = the nominal rated current of the thyristor unit; see type designation (e.g. YGML 470-140 A)

Connect a voltmeter to the current actual value signal 591.X24:7 and use the external potentiometer to set a voltage such that the voltmeter reading shows the calculated voltage $U_I$ (positive). Transfer the voltmeter to 548.X21:1 and adjust the voltmeter reading to -6.0 V with the "$I_d/I_{dmN1}$" potentiomter on YXO 124. Insert jumper link 548.S2:1-2 and balance out this voltage with the "BAL" potentiometer, so that the voltmeter reads 0.0 V.

Increase the simulated current actual value signal by a factor of about 2. The protection should now operate within 2 seconds to 1 minute. The time depends on which tripping curve is selected, and the amount of "warming-up" during adjustment. Check the fault indication on YXO 124, and on the fault indication display if fitted.

Tripping and fault indication should be checked, even if the original setting is retained. At the very least a fault should be simulated by connecting 548.X21:3 to 0 V.

5.14.4.2
Overload protection, RVAB, (M) (43)

When overload protection of RVAB type is included in the installation, YXO 124 is removed and its jumper link 591.S1:13-14 is inserted. The tripping signal from RVAB is connected via the indication unit convertor YXO 122. If the signal is connected via 571.X1:5, jumper whereas if 571.X1:7 is used, jumper link 571.S1:7-8 is to be inserted.

The RVAB unit is to be set in accordance with the following table.

| $I_{dmN1}$ (A) | Setting range RVAB (A) | Actual setting range (A) |
|---|---|---|
| 1600/1800 | 0.5 to 1 x 1600 | 800 - 1600 |
| | 0.7 to 1.4 x 1600 | 1120 - 2240 |
| 2500/3000 | 0.5 to 1 x 2000 | 1000 - 2000 |
| | 0.7 to 1.4 x 2000 | 1400 - 2800 |

Check tripping and fault indications by turning the setting control to the zero position (red mark).

5.14.5.1
Earth fault monitor, YXO 116, ⏚ I> (32)

The convertor must be switched off.

The earth current level can be set with potentiometer "I" on YXO 116, in the range 4-12 A earth current, on the scale on the PCB. The level must be set as low as possible, and the factory setting of 4 A can therefore be retained unless spurious tripping occurs in normal service.

Simulate a fault by connecting 565.X21:4 to 0 V (591.X23:1). Check the fault indication on YXO 116 and on the fault indication display if fitted.

5.14.5.2
Earth fault monitor, RAEUB, ⏚ U > (45)

This unit requires no setting. The tripping signal enters via the indication unit convertor YXO 122. Input 571.X1:5 is normally used and jumper link 571.X1:3-4 is then inserted.

If start sequence B and C is used, jumper link 591.S1:11-12 must be removed, if tripping of the field exciter via this input is required.

To test the function of this unit, disconnect the cable to X1:1 with no voltage applied, and then switch on the voltage. The convertor should now trip and an indication ~U> should be obtained on RAEUB.

5.14.6
Stall protection, YXO 121, Ixt> (27)

The convertor must be switched off.

First set the current level, either by measurement or on the scale of potentiometer "$I_d/I_{dmN1}$". Simulate a current actual value signal (negative voltage) by connecting a variable d.c. voltage from an external potentiometer to 591.X24:2. Connect a voltmeter to the current actual value signal 591.X24:7, and set the required indication level with the potentiometer. A voltag of 5 V corresponds to $I_{dmN1}$. Connect a voltmeter or recorder to 772.X21:2. Turn potentiometer $I_d/I_{dmN1}$ slowly anticlockwise until the voltage at X21:2 changes from "0" to "1".

If YXO 121 is to be used for load indication without speed conditions, jumper link 772.S1:1-2 must be removed.

Set the speed level either by measurement or on the scale of potentiometer "N". Connect a variable d.c. voltage from an external potentiometer to the speed actual value signal, X21:2 on YXR 162 or X21:8 on YXR 163, and set the required speed signal. Connect a voltmeter or recorder to 772.X21:3. Turn the potentiometer "N" slowly anticlockwise until the voltage at X21:3 changes from "1" to "0".

Set the time either by measurement or against the scale with the "TIME" potentiometer. The easiest way to do this is to use a recorder, with one channel connected to 772.X21:1, and the other to 722.X21:5. Start the time circuit by connecting 772:X21:1 to 0 V (591.X23:1) and measure the time taken for 772.X21:5 to go to "0".

In addition, check that the convertor is tripped (when X21:5 goes to "0") and that a fault indication is given on YXO 121, and on the fault indication display if fitted.

5.14.7
Brake fault, YXZ 143, (26)

The dynamic/mechanical brake control unit, YXZ 143, is fitted with circuits to monitor brake operation. Simulate a fault by connecting 778.X22:5 to 0 V. Check that the convertor is tripped, and that a fault indication is given on YXZ 143 and on the fault indication display if fitted.

5.14.8
External faults, YXO 122, 1 and 2 (33)

Convertor indication unit YXO 122 has two inputs for external faults. Select the required function by fitting jumper links in accordance with the table below:

| | Fault 1 571.X1:5 | | Fault 2 571.X1:7 | |
|---|---|---|---|---|
| Jumper link positions 571.S1: | 3-4 | 5-6 | 7-8 | 9-10 |
| Fault signal "1" for fault | X | | X | |
| Fault signal "0" for fault | | X | | X |

X = jumper link inserted

Fault signal "1" means that an external fault contact has closed to M1+. Fault 1 and Fault 2 normally give "General trip"; see Figure 4-26 in YT 280-103 E, Description. This means that the field exciter does not trip in starting sequence B and C. See Section 4.3.1 of the same publication. To obtain field exciter tripping for Fault 1 with starting sequence B and C, remove jumper link 591.S1:11-12.

Simulate the external faults in an appropriate manner so that the convertor is tripped. Check that a fault indication is given on YXO 122, and on the fault indication display where fitted.

## 6
## CONCLUDING OPERATIONS

If the drive equipment includes units for reference generation, master control etc. in the "drive control equipment" these must also be adjusted. Commissioning of units in the "drive control equipment" is described in instructions provided specifically for each individual installation.

If the START 1 signal has been simulated as described in Sectio 4.1, the original circuit must be reinstated. If a sequential control unit YXP 132, YXP 133 or YXP 134 is fitted, select the required starting sequence as described in Section 4.3 of YT 280-103 E. Normally the convertor is delivered with jumper links inserted for starting sequence C. If B or D is required, the jumper links on YXT 115 must be arranged as shown in the table in the same section.

The convertor is delivered with jumper links inserted for starting sequence A if none of the above sequential control units is fitted.

Switch on the convertor and check that the required controlled apparatus comes on and that the acknowledgement lamp in the ON pushbutton lights up. Then give a START signal via the reference unit, and check that the drive can be controlled in the manner intended.

Check that all screw terminals for external connections are tight. Check that all printed circuit boards are firmly home i their sockets.