ABB Network Partner

REL 511 * 1.2
Line distance protection terminal

1MRK 506 002-BEN
Page 1
November 1997
Changed since October 1997
Data subject to change without notice

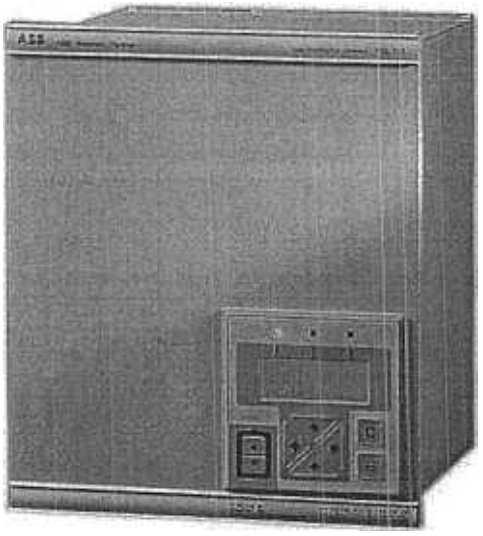

(SE 95 02 08)

Features

- Simultaneous measurement of the different phase-phase and phase-earth loop impedances within the numerical measuring elements that are individual for each type of fault and each distance zone ensures fast and reliable fault detection
- The typical operating time of the impedance measuring function is 32 ms
- The multiprocessor-based design guarantees high availability together with excellent possibilities for extensive combination of different optional functions
- Numerical filtering and measuring technique ensures a correct performance during CT saturation and CVT transients
- Versatile local man machine communication (MMC) from the relay front panel, together with the two optionally built-in serial ports, brings REL 511 close to the user, whether he be located in a substation, control centre or office
- Extensive self-supervision with fault diagnostics presented on an MMI unit
- The basic version of REL 511 includes:
  - five distance protection zones with individual setting of the directionality and reach in reactive and resistive direction
  - separate and independent impedance measuring elements for the General Fault Criteria (GFC) with advanced characteristic
  - time delayed overcurrent back-up protection
  - switch-onto-fault protection facilities
  - three-phase tripping
  - presentation of the measured mean values of the line current, voltage, active power, reactive power and frequency, together with the actual statuses of all input and internal binary signals
  - extensive configuration possibilities by use of built in logical gates, timers and user configurable connections between different functions, binary inputs and binary outputs

- breaker failure protection
- supervision of the protected power line
- directional or non-directional earth-fault overcurrent protection
- sensitive earth-fault protection for isolated or high impedance earthed networks
- 4-step earth fault overcurrent protection
- time delayed under and overvoltage protection
- accurate fault locator, based on well proven measuring algorithm
- detailed disturbance reporting for the last ten disturbances with up to 150 time-tagged events for each reported disturbance
- on-line control functions
- simulation logic

Application

The REL 511 line protection terminal represents the basic unit of the distribution and sub-transmission line protection terminals that form a part of a PYRAMID system. The PYRAMID system includes a complete range of the complex object terminals, a functional station monitoring, and a station control system. The blocks in PYRAMID are available as stand-alone protection units or as building blocks in a complete Substation Monitoring System (SMS), Substation Control System (SCS) and/or Relay Testing System (RTS).

Basic functions

The basic protection function in REL 511 is a distance protection with individual measuring elements for the different types of faults that belong to the various impedance zones. The terminal includes basically five impedance measuring zones with programmable directionality.

The independent measuring elements provide general fault criteria (GFC). For their operation they use other combinations of measuring quantities than the zone measuring elements. Thus, REL 511 fulfils all the requirements for two different measuring criteria in a single relay point.

The operating characteristic of the GFC measuring elements is advanced, as presented in Fig. 1. The settings of the reactive reaches in forward and reverse direction are independent of one another. The same independence exists between the reach in resistive direction for covering the faults with the higher fault resistance and the reach limitation for a safety load impedance area. The parameters of the safety load impedance area are settable in a wide range as well.

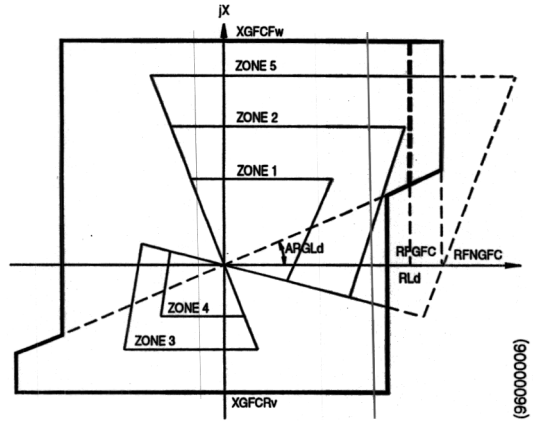

Fig. 1 Characteristic of the impedance measuring function in REL 511.

The quadrilateral characteristics of each impedance zone with an individual and independent setting of the reach in reactive and resistive direction, ensures an optimized application for all line lengths on single lines as well as on lines within the complex network configurations. Automatic adaptation of the earth return compensation contributes additionally to the adaptability of a terminal. The quadrilateral characteristic ensures a maximum resistive coverage for all faults and a maximum limitation of load influence. The load compensated reactance characteristic of zone 1 makes REL 511 applicable for the protection of heavy loaded long lines.

The time delayed phase and earth-fault overcurrent protection serves as a back-up protection to the impedance measuring functions. It can be active continuously, or only in cases of broken fuses in the circuits between the voltage instrument transformers and a protection terminal.

The basic version of a REL 511 provides three-phase tripping. Single-phase tripping for the single-phase-to-earth faults is available as an option.

A built-in switch-onto-fault function provides instantaneous three-phase tripping for the whole line section if a circuit breaker accidentally is closed on to a fault. The function operates in a conventional way (by means of an external binary signal from a CB control switch), or by the activation of the built-in optional logic.

Four independent groups of setting parameters are available within the REL 511. The user can change an active group as well as different parameters within any of them locally by the aid of a user-friendly man machine communication unit, or by means of a personal computer (PC). It is also possible to change an active setting group by activating one of the four programmable binary inputs.

Connections between different functional inputs and outputs, binary inputs and binary outputs are user configurable. The user can configure all built-in functions according to his needs. A high number of different logical gates and timers with individual settable time delays extends additionally the total flexibility of terminals.

The MMI serves as an information unit, presenting in a logical order starting and tripping signals that have appeared during each of the last ten recorded disturbances.

Furthermore, each of the two local MMC possibilities takes over the functionality of the measuring instruments such as the A-meter, V-meter, VAr-meter, W-meter and Hz-meter. Directionality tests during commissioning become a routine by using the REL 511 and its man machine communication possibilities.

Optional functions

Scheme communication logic

REL 511 has a built-in, special user-programmable logic that enables the implementation of practically any communication scheme. It covers most of the needs of existing communication schemes based on zone extension, permissive overreach and underreach transfer tripping, as well as on the blocking principle. In addition to this, unblocking logic in two different modes is available within the permissive schemes. A separate current reversal logic is available to prevent the unnecessary tripping of healthy systems on the multi-circuit lines and within the complex network configurations. A built-in weak end infeed logic is programmable so as to operate in echo mode only, or in both echo and tripping mode.

The time acceleration of an impedance overreaching measuring zone, as conditioned by the readiness of the autoreclosing function and the corresponding circuit breaker itself, is available. The so-called "loss-of-load" function is also included.

Single-pole tripping

Single-pole tripping of the circuit breaker for single-phase-to-earth faults is possible with the aid of a separate single-pole tripping logic.

Phase preference logic

REL 511 is a universal line protection terminal that can be applied to the distribution and sub-transmission overhead lines and cables in solidly earthed, as well as in isolated and compensated networks. For the latter two, a separate filter and phase preference logic are available as an option. A filter logic will prevent unwanted trippings for short transients that may occur at the beginning of single-phase-to-earth faults. Phase preference logic will assure the selective tripping of a single line during cross-country faults. Both the cyclic and acyclic mode of operation with practically all known preferences can be selected.

Fuse failure supervision function and CT-supervision function

The operation of the built-in fuse failure supervision function is based on the detection of a zero-sequence voltage without the presence of a zero-sequence current. The selection of operation, based on the presence of a negative sequence voltage without the negative sequence current is made possible by the settings.

The CT-supervision function is based on comparison between the zero sequence current calculated from the phase currents and a reference current. The reference current is taken from the zero sequence current from another core. This core can either be of measuring transformer type or a relay transformer type. The CT-supervision function provides an alarm signal as an output.

Automatic switch-onto-fault logic

As an option, REL 511 has a built-in logic that determines the dead line conditions necessary for the operation of the switch-onto-fault function. This logic can replace the auxiliary contact of the circuit breaker control switch and the corresponding wiring.

Power swing blocking

The power swing detection is based on measurement of the transient impedance transition time between two concentric impedance polygons with independent reach.

Earth-fault overcurrent protection

A quadrilateral characteristic improves, compared to a circular one, the sensitivity of the distance protection to faults with a higher fault resistance. Distance protection, however, can not detect and clear very high resistive earth-faults.

Complementary earth-fault overcurrent non-directional or directional protection functions are therefore available optionally.

Both versions have selectable time delay characteristics, four of them current-dependent, and one independent. The current-dependent time characteristics also include the possibility of setting the minimum operating current and time.

Directional overcurrent earth fault protection uses two directional measuring elements; one directed in forward and one in reverse direction. This makes it useful both in the permissive overreach and the blocking communication schemes with the protection on a remote line end. In REL 511, the separate optional communication circuits for directional earth fault protection are completely independent of the communication circuits for the distance protection. Furthermore, similar logical circuits are those for the distance protection are also available for the directional earth fault protection (switch-onto-fault, current reversal weak end infeed echo and tripping).

The operation is stabilized against second harmonics. This allows settings for high sensitivity without unwanted tripping due to residual inrush currents in the transformer.

Sensitive earth-fault protection function
In isolated or high impedance earthed networks two types of sensitive earth-fault protection are available as a complement to the distance protection function. Both of them have conventional measuring elements, installed in additional hardware units. All the corresponding logical signals are incorporated into the internal REL 511 logic. The available optional measuring units are:

- RXPF 4, operating on the Icosφ measuring principle
- RXPG 4, operating on a transient (Wischer) measuring principle.

4-step earth fault overcurrent protection
In addition an optional 4-step earth fault protection is available. The 4-step earth fault protection is intended for solidly earthed systems where there is a need for selectivity both for low and high zero sequence currents.
The 4-step earth fault protection have three steps with definite time function and one step with combined definite and inverse time function.

The 4-step earth fault protection measures zero sequence current (3IO) and zero sequence voltage (3UO). The directional function has an characteristic angle of 65 degrees i.e. maximum sensitivity is achieved when the zero sequence current follows the polarized voltage (-3UO) by 65 degrees. All four steps can be made directional or non-directional.

In order to avoid influences on the directional measurement by harmonics in the voltage the 4-step earth fault protection is equipped with an harmonic filter. The inverse-time function step is always blocked if the second harmonic exceeds the set value (20 or 32% of the zero sequence current). The definite time functions can be set individually with or without second harmonic blocking.

Fault locator
An optional fault locator is an essential complement to the distance protection, since it measures the distance to the fault with great accuracy.

The option provides a fault location together with the information on the actual primary and secondary phasors of the voltages and currents in the relay point. The pre-fault and fault values of currents and voltages in a relay point, recorded together with their phase relations for the last ten recorded disturbances, are also available.

A calculation algorithm compensates the effect of the load currents and the apparent fault resistance, as well as the zero sequence mutual coupling of a parallel operating circuit.

Event recorder
Up to 150 time-tagged events for each of the last ten recorded disturbances are available via the PC connection on the front, SMS or SCS. Time synchronization is possible by means of the minute pulses wired to a separate binary input as well as via the optionally built-in communication ports for remote communication.

Disturbance recorder
The disturbance recording function is an important part of a substation monitoring system, which enables the evaluation of different events within the power system.

The optional disturbance recorder with a high performance is one of the building blocks within the REL 511. It can memorize up to10 analogue and 48 binary signals (input binary signals or internal signals) that are available within the terminal. The minimum total recording time is 10 seconds.

Any of the recorded analogue and binary signals is programmable to start a recording. Furthermore, analogue signals are programmable for overfunctions and underfunctions, and binary signals can start recording with a transition from a logical 0 to a logical 1 and vice versa.

The time base is synchronized with an internal clock and via the synchronizing facilities further on to the system. Pre-fault time, post-fault time and limit time are settable in wide ranges.

The disturbance recorder option can be selected as a disturbance recorder with extended memory.

The collection of disturbance records is possible locally by means of a PC used for local man machine communication, as well as remotely within the SMS. The disturbance evaluating PC-based program type REVAL, operating in MS Windows, is also available.

Autoreclosing
Two different options are available for the autoreclosing function:

- Three-phase multi-shot autoreclosing: The reclosing function can be set to perform 1, 2, 3 or 4 three-phase reclosing shots. The first autoreclosure open time can be set as a high-speed or delayed autoreclosing. Autoreclosing can be performed with or without the use of an optional synchronism check and energizing check.
- Single and/or three-phase one or multishot autoreclosing: The reclosing function can be selected to perform single-phase and/or three-phase reclosing from eight single-shot to multiple-shot reclosing programs. The three-phase autoreclose open time can be selected to give either high-speed autoreclosing or delayed autoreclosing.

Three-phase autoreclosing can be performed with or without the use of an optional synchronism check or energizing check function.

Extensive information on the operation of a reclosing function is available to the user at any time.

Synchronism and energizing check function
The built-in synchronism check function has all the characteristic operating parameters settable in wide ranges. The energizing check function makes possible energizing of dead line as well as energizing of dead busbar or energizing in both directions.

Breaker failure protection
Optional breaker failure protection as built into the REL 511 measures a current flowing through a corresponding line circuit breaker. Information on a current zero crossing is also essential so as to overcome transients, caused by the saturated current instrument transformers.

Two timers are available, one independent on the other: timer T1 for a repeated tripping of its own circuit breaker, and timer T2 that operates the corresponding output relays, connected into the breaker failure tripping logic.

Under/Overvoltage protection
Optional voltage measuring functions are available in the REL 511 terminals. Operating values of the overvoltage and undervoltage measuring elements are settable in wide ranges, independent one of another. Each of them has built in and independent time delayed element with wide setting range.

System supervision functions
Different supervision functions that supervise a protected power line, as well as the near vicinity of REL 511, are available as an option among the supervision functions of the system.

Their functionality is based on a measurement of the line current (overload protection) and a difference in the phase currents (broken conductor protection). A loss-of-voltage function with its tripping logic is useful in systems with a built-in automatic restoration function.

On-line control functions
Optionally built-in function block makes possible on line remote control of up to ten binary signals. On this way the on line control of the circuit breakers as well as different built in functions is possible remotely via the SCS and SMS.

Simulation logic
The optional simulation logic makes possible to the user to program an appearance and time sequence of different internal logical signals and on this way test the operation of different built-in disturbance reporting functions, event handling within SMS and SCS and exercise the signal flow within the substation.

Optional input/output facilities
The basic version of a REL 511 comprises four binary inputs and five output relay contacts. One of them is a normally closed contact, used for the signalisation of a continuous self-supervision function.

One or two additional printed circuit boards, each of them comprising eight binary inputs and twelve independent output relay contacts, are available as an option. All the binary inputs are freely programmable for any of the built-in functions to assure the greatest possible flexibility.

All the output relays are freely programmable to any of the internal logical signals.

Optional remote serial communication
Optionally, the corresponding software and one or two serial communication ports are available with the REL 511. They are installed independent of each other on the back plane of the terminal. Remote communication with REL 511 uses the optical fibres to eliminate the influence of the electromagnetic interferences. This enables the REL 511 to be a part of the SMS and/or the SCS at the same time. The software program SMS-BASE with SM/REL 511, installed in a personal computer, enables the relay engineer to establish communication with the REL 511 (either direct communication or communication through a telephone network), read information from the relay on a PC screen, and store it in PC files. The operator in the control room and/or control centre has similar possibilities when one communication port is connected to the SCS. Communication within the SCS enables time synchronization of the REL 511 with other equipment in the substation. Similar functionality is also possible when it is connected to the SMS only.

The remote collection of disturbance records is possible within the station monitoring system (SMS) by using the SMS-BASE with RECOM. An evaluation of the disturbance records is feasible by means of the REVAL evaluating PC-based program.

Design

The REL 511 line protection terminal is supplied in a closed case of common ABB look, which is 9,5" wide and 6U (10") high. A motherboard is mounted under the front cover of the terminal. All other units are of plug-in type and thus easily removable. Screw connection terminals, mounted on the back plane of the terminal, serve for the electrical connections to the external circuits. Optional optical connectors of type SPA-ZC21 that serve for remote communication purposes within the SCS and SMS are located on the back plane too.

The basic configuration of REL 511 consists of the following units:

- Transformer unit with five voltage and five current input transformers.
- A/D conversion unit for 10 analogue signals, operating with a sampling frequency of 2000 Hz.
- Multiprocessor-based central processing unit that performs all the REL 511 measuring functions.
- Power supply unit, which comprises a regulated dc/dc converter that provides stabilized auxiliary voltage to all static circuits. Four binary input circuits together with the five output relays are installed in the same unit.
- Man machine interface unit is installed on the front plane of REL 511 and serves as a local communication facility between the user and the equipment

The following hardware units are available optionally:

- one or two input/output units, each of them consisting of eight binary inputs and twelve relay output contacts.
- one or two serial interface units of type SPA ZC21, intended for remote communication purposes.
- sensitive earth-fault protection for isolated or high impedance earthed networks.

Basic version

The measuring technique used in the REL 511 protection terminal is based on pure numerical methods. The measuring signal processors (SP1 to SP10) operate with numerical signals derived from the analogue-to-digital converter (see Fig. 2).

The self-supervision function operates continuously and includes:

- normal microprocessor watchdog function
- checking of digitized measuring signals
- checksum verification of PROM contents
- checksum verification of all types of signal communication
- Read-Write-Read-Write cycling of the memory cells and internal registers

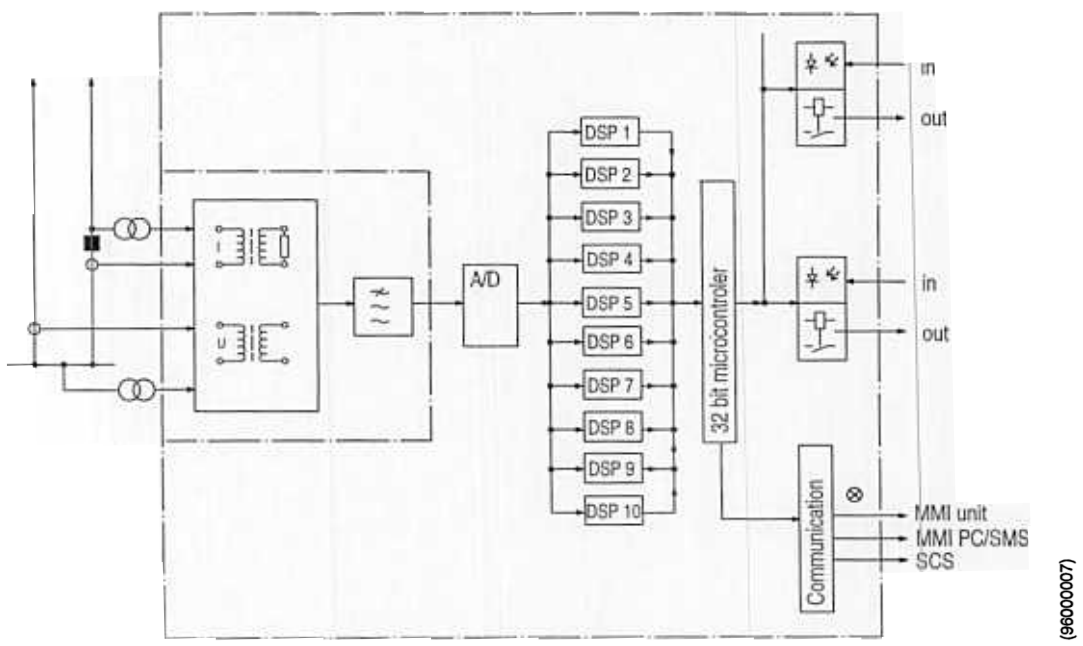

Fig. 2 REL 511 schematic diagram and signal flow

Transformer unit
Totally ten analogue input quantities are processed in a transformer unit:

- three currents as phase currents of a protected line
- residual current ($3I_0$) of a protected line
- residual current ($3I_0$) of a parallel operating line when used (for an optional fault location function only)
- three phase-to-earth voltages of a protected line
- open delta voltage of a protected line (for an optional directional earth-fault protection function, when used)
- one phase to earth voltage from the busbar side of a circuit breaker (for an optional synchro-check / dead-line-check function).

A/D conversion unit
Anti-aliasing low pass analogue filters filter the analogue signals before they enter the multiplexer and an analogue-to-digital converter. A separate signal processor in an A/D conversion unit performs digital low-pass filtering. The total bandwidth of the filtered signals will then be suitable for protection purposes.

The information is then converted from parallel to serial mode and transmitted to the measuring unit (central processing unit).

Measuring unit (central processing unit)
REL 511 is based on a multiprocessor design with a 32 bit microcontroller and a number of digital signal processors (DSP).

Encoded serial information from the A/D converter unit is decoded and changed back to the parallel information in the measuring unit. Band pass numerical filtering of the corresponding current and voltage signals is performed as well.

Three DSPs perform a basic impedance measuring function. They calculate the impedance as seen for the different fault loops on the basis of the complex values of the measured voltages, currents, and changes in the currents.

The resulting impedance is compared with the reactance and resistance limits determined by the relay settings for each fault loop and each distance zone separately for each millisecond.

The GFC measurement is performed in a separate DSP.

In order to measure the same operational impedance for all fault loops, a zero-sequence compensation has been applied for measurement in the phase-to-earth fault loops. It influences the measurement in the reactive direction only. The compensation will be automatically adapted to line positive and zero sequence parameters, for each distance zone separately.

The resistive reach is adjustable separately for the earth-fault measuring loops, and for the phase-to-phase fault measuring loops. It is settable for the different distance zones, independently of each other.

To maintain a definite directional measurement for the faults close to the relay point a loop voltage signal is used in conjunction with a phase locked positive sequence memory voltage that lasts for approximately 100 ms.

A 32 bit microcontroller directs the information flow with the different signal processors, input/output units and also performs some different logical functions, built into the REL 511 line terminal. It also controls the following three communication ports:

- to the man machine communication unit and connected PC, if any, for local man machine communication
- to the station monitoring system SMS (option)
- to the substation control system SCS (option)

Power supply unit
The power supply unit comprises a regulated dc/dc converter that provides a stabilized auxiliary voltage to all static circuits within the REL 511 as well as to all output relays. Four binary input circuits together with the five output relays are installed in the same unit.

Man machine interface (MMI) unit
The MMI unit has a common ABB look and is installed on the front plane of REL 511. It is used for local communication with the personnel on site. Two connection points (transmitting and receiving), for the connection of the optical fibres, are available in the MMI unit. Thus, disturbance-free local serial communication with the personal computer is also available. The following most important functions are unified in the MMI unit:

- settings: Four groups of setting parameters are settable or readable only by menu-structured, self-explanatory MMI software. Different parameters are changeable within the different setting groups. The selection of an active setting group is also possible.
- information handling: The most important information on the last ten disturbances, including the time of disturbance, its duration, together with the starting and tripping signals, is stored in REL 511 and available to the user at any time via the MMI unit. Information about the actual line current, voltage, active and reactive power together with frequency is also available. The same is valid for the statuses of all important internal logical signals. If the optional fault location is included in REL 511, the information on distance to fault, together with the phasors of the pre-fault and fault currents and voltages, is available for the last ten disturbances as well.

- fault tracing: The faulty part of a REL 511 as detected by the built-in continuous self supervision will be presented by the corresponding code on the MMI unit.
- simplified testing of different functions and wiring during commissioning or any other testing activities, not only within REL 511, but also in the external circuits, is feasible by using the possibility of setting any of the most important REL 511 internal logical signals at the logical value 1, 0, or at the actual logical value. Complete signalling, tripping and logical circuits within the line bay can be tested this way. The use of optional simulation logic makes these activities even more comfortable.

The use of a personal computer simplifies to a great extent the communication with REL 511 and gives the user additional functionality which, due to the lack of space, is not available in the MMI unit itself:

- up to 150 time-tagged events are available for each of the last ten recorded disturbances (option)
- disturbance records are available for collection by a personal computer and corresponding software.

Options

The REL 511 line protection terminal is easily adaptable to the requirements for the protection of any sub-transmission and distribution power line, thanks to its modular design and multiprocessor-based configuration. This way, the additional hardware modules and/or additional software functions (described under the item "Application"), can be added to the basic version.

Input/Output units

As an option, one or two input/output units, each of them consisting of eight binary inputs and twelve relay output contacts are available to the user of REL 511.

Binary inputs are freely programmable as the input logical signals to any of the built-in functions, including the disturbance recording and event recording facilities. This enables the extensive monitoring and evaluation of operation for the terminal itself as well as that of all associated external circuits.

More than 300 internal signals are available for signalling purposes and all of them are freely programmable to operate any of the additional output relays. By the use of a built-in configuration facilities, the user can perform its own engineering of all built-in functions.

Remote serial communication

One or two serial interface units of type SPA ZC 21, intended for remote communication purposes, make it possible for the REL 511 terminal to be included at the same time both in the SCS and SMS or in only one of them. The units are optional and they are located on the back plane of REL 511.

Plastic optical fibres up to the single length of 30 meters, and glass fibres up to the single length of 500 meters can be used as a communication media.

Sensitive earth-fault protection

A sensitive earth-fault protection is a natural complement to the distance protection in isolated and high impedance earthed networks. As an option, an external unit of type RXPF 4 or RXPG 4 are available for these purposes. They both occupy four seats in the COMBIFLEX mechanical system.

Technical data

Table 1: Energizing quantities, rated values and limits

Quantity	Rated value	Nominal range
Current Operative range Burden	I_r = 1 or 5 A (0,2-4) × I_r cont. (0,2-100) × I_r for 1 s *) < 0,25 VA at I_r	(0,2-30) × I_r
Ac voltage Ph-Ph Operative range Burden	U_r = 100/110/115/120 V 1,5 × U_r cont. 2,5 × U_r for 1 s < 0,2 VA at U_r	(80-120)% of U_r
Frequency	f_r = 50/60 Hz	± 5%
Auxiliary dc voltage EL power consumption basic terminal each I/O-board each output relay	U_r = (48/60) V U_r = (110/125) V U_r = (220/250) V ≤ 14 W ≤ 1 W ≤ 0,1 W	± 20% ± 20% ± 20%
Binary input circuits dc voltage RL power consumption U_r = (24/30)V U_r = (48/60)V U_r = (110/125)V U_r = (220/250)V	 U_r = (24/30) V U_r = (48/60) V U_r = (110/125) V U_r = (220/250) V max. 0,05 W/input max. 0,1 W/input max. 0,2 W/input max. 0,4 W/input	 ± 20% ± 20% ± 20% ± 20%
Ambient temperature	20° C	-5° C to +55° C
Ripple in dc auxiliary voltage	max. 2%	max. 12%
Relative humidity	(10-90)%	(10-90)%

*) max. 350 A for 1 s when COMBIFLEX test switch included together with the product

Table 2: Influencing factors, Permissible influence

Dependence on:	Within nominal range	Within operative range
Ambient temperature	0,01% / °C	Correct function
Ripple in auxiliary dc voltage	Negligible	Correct function
Interruption in auxiliary dc voltage without resetting correct function restart time	 < 50 ms 0 - ∞ < 45 s	 < 50 ms 0 - ∞ < 45 s

Table 3: Electromagnetic compatibility tests

Test	Type test values	Reference standards
1 MHz burst disturbance	2,5 kV	IEC 255-22-1, Class III
Electrostatic discharge	8 kV	IEC 255-22-2, Class III
Fast transient disturbance	4 kV	IEC 255-22-4, Class IV
Radiated electromagnetic field disturbance	10 V/m, (25-1000) MHz	IEC 255-22-3, Class III Draft IEEE/ANSI C37.90.2

Table 4: Insulation tests (reference standard: IEC 255-5)

Test	Type test values
Dielectric test	2,0 kV ac, 1 min
Impulse voltage test	5 kV, 1,2/50 µs, 0,5 J
Insulation resistance	>100 MΩ at 500 V dc

Table 5: Mechanical tests

Test	Type test values	Reference standards
Vibration	Class I	IEC 255-21-1
Shock and bump	Class I	IEC 255-21-2
Seismic	Class I	IEC 255-21-3

Table 6: Contact data (reference standard: IEC 255)

Function or quantity	Trip and Signal relays	Fast signal relays
Max system voltage	250 V ac, dc	250 V ac, dc
Test voltage across open contact, 1 min	1000 V rms	800 V dc
Current carrying capacity continuous 1 s	 8 A 10 A	 8 A 10 A
Making capacity at inductive load with L/R>10 ms 0,2 s 1,0 s	 30 A 10 A	 0,4 A 0,4 A
Breaking capacity for ac, cos φ>0,4	250 V/8,0 A	250 V/8,0 A
Breaking capacity for dc with L/R<40 ms	48 V/1 A 110 V/0,4 A 220 V/0,2 A 250 V/0,15 A	48 V/1 A 110 V/0,4 A 220 V/0,2 A 250 V/0,15 A
Maximum capacitive load	-	10 nF

Table 7: Additional General Data

Weight approx.	8,5 kg
Dimensions width height depth	 223,7 mm 267 mm 245 mm
Storage temperature	-40° C to +70° C

Table 8: Mean values

Function	Nominal range
Frequency	(0,95-1,05) x f_r
Voltage	(0,1-1,5) x U_r
Current	(0,2-4) x I_r
Active power Reactive power	at $\lvert\cos\varphi\rvert \geq 0,9$ at $\lvert\cos\varphi\rvert \leq 0,8$

Table 9: Event recording

Function	Value
Time tagging resolution	1 ms
Event buffering capacity	
Max. number of events/disturbance report	150
Max. number of disturbance reports	10
Time tagging error with synchronisation once/1s	± 1,5 ms
Time tagging error with synchronisation once/10s	± 1,5 ms
Time tagging error with synchronisation once/60s (minute pulse synchronisation)	± 1,5 ms
Time tagging error without synchronisation	± 3 ms/min

Table 10: Remote serial communication

Function	Value
Protocol	SPA
Communication speed	300, 1200, 2400, 4800 or 9600 bit/s
Slave number	1 to 899
Remote change of active group allowed	yes/no
Remote changed of settings allowed	yes/no
Connectors and optical fibres	glass or plastic

Table 11: Disturbance recorder

Function	Setting range
Number of binary signals	0 - 48
Number of analogue signals	0 - 10
Sampling rate	2 kHz
Recording bandwidth	(5-250) Hz
Overcurrent triggering	(0 - 5000)% of I_r in steps of 1%
Undercurrent triggering	(0 - 200)% of I_r in steps of 1%
Overvoltage triggering	(0 - 200)% of $U_r / \sqrt{3}$ in steps of 1% at 100 V sec
Undervoltage triggering	(0 - 110)% of $U_r / \sqrt{3}$ in steps of 1%
Pre-fault time	(50 - 300) ms in steps of 10 ms
Post fault time	(100 - 3000) ms in steps of 100 ms
Limit time	(500 - 4000) ms in steps of 100 ms
Number of recorded disturbances	Max 10 disturbances
Function	**Value**
Voltage channels	
dynamic range	(0,01-2,0) x $U_r / \sqrt{3}$ at 100 V sec.
resolution	0,1% of $U_r / \sqrt{3}$
Current channels	
dynamic range	
without dc offset	(0,01-110) x I_r
with full dc offset	(0,01-60) x I_r
resolution	0,5% of I_r
Total recording time with 10 analogue and 48 binary signals *) recorded	typical 15 s maximum 40 s with extended memory
Built-in calendar	for 30 years with leap years

*) The amount of harmonics can affect the maximum storage time

Table 12: Zone impedance measuring elements

Function	Value
Operate time typical	 32 ms
Min. operate current	0,2 x I_r
Phase preference logic: operating residual current $3I_0$ operating residual voltage $3U_0$ cyclic tripping phase preference acyclic tripping phase preference acyclic blocking phase preference	 (0,2-2,0) x I_r in steps of 0,01 (0,1-0,7) x U_r / √3 in steps of 0,01 L1L3L2, L3L1L2 L1L3L2, L1L2L3, L3L2L1, L3L1L2, L2L1L3, L2L3L1 L1L3L2, L1L2L3, L3L2L1, L3L1L2, L2L1L3, L2L3L1
Resetting ratio	typical 105%
Resetting time	typical 40 ms
Tripping mode	three phase or single and three phase
Setting accuracy	included in the measuring accuracy
Number of zones basic version	 5, direction selectable
Impedance setting range at I_r = 1 A reactive reach positive sequence reactance X1 zero sequence reactance Xo resistive reach positive sequence resistance R1 zero sequence resistance Ro fault resistance for phase - phase faults for phase - earth-faults	 (0,1-150) Ω in steps of 0,01 Ω (0,1-1200) Ω in steps of 0,01 Ω (0,1-150) Ω in steps of 0,01 Ω (0,1-1200) Ω in steps of 0,01 Ω (0,1-150) Ω in steps of 0,01 Ω (0,1-150) Ω in steps of 0,01 Ω
Setting range of timers for impedance zones	 (0 -10) s in steps of 0,001 s
General fault criteria (GFC) - impedance setting range at I_r = 1A reactive reach forward positive sequence reactance X1 zero sequence reactance Xo reactive reach reverse positive sequence reactance X1 zero sequence reactance Xo resistive reach (forward & reverse) for phase - phase faults for phase - earth-faults load encroachment safety load impedance angle	 (0,1-150) Ω in steps of 0,01 Ω (0,1-1200) Ω in steps of 0,01 Ω (0,1-150) Ω in steps of 0,01 Ω (0,1-1200) Ω in steps of 0,01 Ω (0,1-150) Ω in steps of 0,01 Ω (0,1-150) Ω in steps of 0,01 Ω (0,1-150) Ω in steps of 0,01 Ω (5-45)° in steps of 1°
General fault criteria (GFC) - overcurrent setting range phase currents residual current	 (10-400)% of I_r in steps of 1% (10-150)% of I_r in steps of 1%
Timers for the GFC criteria for phase measuring for earth-fault measuring	 (0-10) s in steps of 0,001 s (0-10) s in steps of 0,001 s

Table 13: Distance protection: Accuracy data at reference conditions

Type	Voltage range	Current range	SIR	Accuracy
Static accuracy at 0° and 85°	(0,1 - 1,1) x U_r	(0,5 - 30) x I_r	-	± 5%
Static angular accuracy at 0° and 85°	(0,1 - 1,1) x U_r	(0,2 - 30) x I_r	-	± 5°
Max. dynamic overreach at 85° measured with CVTs	-	-	0,5 < SIR < 30	+ 5%

Table 14: Power swing detection element

Function	Setting range
reactive reach at I_r = 1 A resistive reach at I_r = 1 A impedance transition time	(0,1-150) Ω in steps of 0,01 Ω (0,1-150) Ω in steps of 0,01 Ω 40 ms

Table 15: Scheme communication logic with current reversal and weak end infeed logic

Function	Setting range
Coordination timers tCoord. timer tSendmin timer	 (0-100) ms in steps of 1 ms (0-150) ms in steps of 1 ms
Weak end infeed trip and echo function voltage check U< *) duration of ECHO signal	 (20-80)% U_r / √3 in steps of 1% 200 ms
Unblocking logic unblocking timer duration of window timer restart check timer	 (0-100) ms in steps of 1 ms 150 ms 200 ms
Current reversal logic activation time delay time delay of CR, CS	 (0-100) ms in steps of 1 ms (0-150) ms in steps of 1 ms

*) Voltage check function and corresponding setting is common for the following functions:
- weak end infeed trip and echo
- automatic switch-onto-fault logic
- loss of voltage within the power system supervision function
- undervoltage protection

Table 16: Automatic switch onto fault function

Function	Setting range
Automatic switch onto fault function voltage check *) current check	 (20-80)% of U_r / √3 in steps of 1% <10% of I_r
Minimum duration for dead line condition	200 ms

*) Voltage check function and corresponding setting is common for the following functions:
- weak end infeed trip and echo
- automatic switch-onto-fault logic
- loss of voltage within the power system supervision function
- undervoltage protection

Table 17: System supervision functions

Function	Setting range
Power system supervision	
overload I>	(20-300)% of I_r in steps of 1%
time delay	(0-60) s in steps of 1 s
broken conductor	
min. phase current I_{bc}	10% of I_r
min. unsymmetry	20% of max. phase current
time delay	(0-50) s in step of 1 s
loss of voltage function	(20-80)% of $U_r / \sqrt{3}$ in steps of 1%
time delay	7 s

*) Voltage check function and corresponding setting is common for the following functions:
- weak end infeed trip and echo
- automatic switch-onto-fault logic
- loss of voltage function
- undervoltage protection

Table 18: Fuse failure supervision function

Function	Setting range
Zero sequence quantities:	
operating voltage $3U_0$	(10 - 50)% of $U_r / \sqrt{3}$ in steps of 1%
operating current $3I_0$	(10 - 50)% of I_r in steps of 1%
Negative sequence quantities:	
operating voltage $3U_2$	(10 - 50)% of $U_r / \sqrt{3}$ in steps of 1%
operating current $3I_2$	(10 - 50)% of I_r in steps of 1%

Table 19: CT supervision

Function	Setting range
Operating current I>	(5 - 100)% of I_r in steps of 1%

Table 20: Fault locator

Function	Setting range
Distance to fault locator	
reach for I_r =1 A in	
resistive direction	(0 - 1500) Ω
reactive direction	(0 - 1500) Ω
min measuring cycle	1,75 or 1,25 cycle
phase selection	internal

Table 21: Overcurrent protection

Function	Setting range
Operating current	
phase measuring elements	(10-400)% of I_r in steps of 1%
residual measuring elements	(10-150)% of I_r in steps of 1%
Dynamic overreach at τ < 100 ms	-
Time delay	
phase current measuring el.	(0-25) s in steps of 0,01s
residual current measuring el.	(0-25) s in steps of 0,01s

Table 22: Under- and overvoltage protection

Function	Setting range
Operating voltage	
undervoltage *)	(20-80)% of $U_r / \sqrt{3}$ in steps of 1%
overvoltage	(80-200)% of $U_r / \sqrt{3}$ in steps of 1%
Time delay	
undervoltage	(0 - 5) s in steps of 0,1 s
overvoltage	(0 - 5) s in steps of 0,1 s

*) Voltage check function and corresponding setting is common for the following functions:
- automatic switch-onto-fault logic
- loss of voltage function
- undervoltage protection
- weak end infeed echo and trip

Table 23: Autoreclosing - Three-phase

Function	Setting range
Number of autoreclosing shots	1 - 4
Number of autoreclosing programs	4
Autoreclosing open time:	
shot 1 - t1	(0,2-60) s in steps of 0,01 s
shot 2 - t2	(1,0-300) s in steps of 1 s
shot 3 - t3	(1,0-300) s in steps of 1 s
shot 4 - t4	(1,0-300) s in steps of 1 s
Reclaim time - tReclaim	(10-300) s in steps of 1 s
Inhibit reclosing, reset time -tInhibit	(5-30) s in steps of 1 s
Duration of reclosing pulse - tPulse	(0,1-1,0) s in steps of 0,01 s
SC/DC time limit - tSync	(0,5-10,0) s in steps of 0,1 s
Breaker closed before start - tCB	5 s
Resetting of "AR Started" after reclosing - tTrip	(0,2-1,0) s in steps of 0,1 s

Table 24: Autoreclosing - Single- and/or three-phase

Function	Setting range
Number of autoreclosing shots	1 - 4
Number of autoreclosing programs	8
Auto-reclosing open time:	
1-phase shot 1 - t1s	(0,2-5,0) s in steps of 0,01 s
3-phase shot 1 - t1	(0,2-60) s in steps of 0,01 s
3-phase shot 2 - t2	(1,0-300) s in steps of 1 s
3-phase shot 3 - t3	(1,0-300) s in steps of 1 s
3-phase shot 4 - t4	(1,0-300) s in steps of 1 s
Reclaim time - tReclaim	(10-300) s in steps of 1 s
Inhibit reclosing, reset time -tInhibit	(5-30) s in steps of 1 s
Duration of reclosing pulse - tPulse	(0,1-1,0) s in steps of 0,01 s
SC/DL time limit - tSync	(0,5-10,0) s in steps of 0,1 s
Breaker closed before start - tCB	5 s
Resetting of "AR Started" after reclosing - tTrip	(0,2-1,0) s in steps of 0,1 s

Table 25: Synchro-check and energizing check function

Function	Setting range
Synchro check frequency difference limit voltage difference limit phase difference limit	 (50-300) mHz in steps of 10 mHz (5-50)% of $U_r / \sqrt{3}$ in steps of 1% (5-75)° in steps of 1°
Energizing voltage level high voltage level low energizing time	 (70-100)% of $U_r / \sqrt{3}$ in steps of 1% (10-80)% of $U_r / \sqrt{3}$ in steps of 1% (0-1) s in steps of 0,01 s
Operating time	**Value**
For synchro check function For energizing check function	typical 190 ms typical 80 ms

Table 26: Non-directional earth-fault overcurrent protection

Function	Setting range	Accuracy
Basic current for inverse time delay $3I_0$	(5-300)% of I_r in steps of 1%	
Independent time delay	(0-6,0) s in steps of 0,01 s	± 0,5% ± 10 ms
Normal inverse characteristic	k = (0,05-1,1) in steps of 0,01	IEC 255-3 class 5 ± 60 ms
Very inverse characteristic	k = (0,05-1,1) in steps of 0,01	IEC 255-3 class 7,5 ± 60 ms
Extremely inverse characteristic	k = (0,05-1,1) in steps of 0,01	IEC 255-3 class 7,5 ± 60 ms
Logarithmic characteristic $t = 5,8 - 1,35 \times \ln \frac{I}{3I_0}$		± 5% of t at I = (1,3-29) x $3I_0$
tMin for dependent characteristic	(0,05-6,0) s in steps of 0,01 s	
Min. operate current for dependent characteristic IMin	(100-400)% of $3I_0$ in steps of 1%	
Operating time	**Value**	
Resetting time	< 70 ms	

Table 27: Directional earth-fault overcurrent protection

Function	Setting range	Accuracy
Basic current for inverse time delay: $3I_0$	(5-300)% of I_r in steps of 1%	
Operating value for directional current measurement forward $3I_0$ at $\varphi = 65°$ reverse	 (5-35)% of I_r in steps of 1% 60% of the setting for forward operation	
Characteristic angle	65° lagging	
Independent time delay	(0-6,0) s in steps of 0,01 s	± 0,5% ± 10 ms
Normal inverse characteristic	k = (0,05-1,1) in steps of 0,01	IEC 255-3 class 5 ± 60 ms
Very inverse characteristic	k = (0,05-1,1) in steps of 0,01	IEC 255-3 class 7,5 ± 60 ms
Extremely inverse characteristic	k = (0,05-1,1) in steps of 0,01	IEC 255-3 class 7,5 ± 60 ms
Logarithmic characteristic $t = 5,8 - 1,35 \times \ln \frac{I}{3I_0}$		± 5% of t at I = (1,3-29) x $3I_0$
tMin for dependent charact.	(0,05-6,0) s in steps of 0.01 s	
Min. operate current for dependent characteristic IMin	(100-400)% of $3I_0$ in steps of 1%	
Rated voltage	110/√3 V	
Minimum polarising voltage	1% of 110/ √3	
Operating time	**Value**	
	< 70 ms	

Table 28: 4 Step earth-fault overcurrent protection

Function	Setting range	Accuracy
Current level for step 1	(50 - 2500)% of I_r in steps of 1%	
Definite time delay for step 1	(0 - 10,0) s in steps of 0,01	
Current level for step 2	(20 - 1500)% of I_r in steps of 1%	
Definite time delay for step 2	(0 - 10,0) s in steps of 0,01	
Current level for step 3	(20 - 1500)% of I_r in steps of 1%	
Definite time delay for step 3	(0 - 10,0) s in steps of 0,01	
Current level for step 4 definite time delay or minimum operate current for inverse time delay	(4 - 440)% of I_r in steps of 1%	
Definite time delay for step 4 or inverse time additional delay	(0 - 10,0) s in steps of 0,01	
Basic current for inverse time delay	(4 - 110)% of I_r in steps of 1%	
Time multiplier for inverse time delay	(0,05 - 1,10) s in steps of 0,01	
Inverse time minimum delay	(0,00 - 10,00) s in steps of 0,01	
Operating value for directional current measurement forward $3I_0$ at $\varphi = 65°$ reverse	 (5 - 40)% of I_r in steps of 1% 60% of the setting for forward operation	
Level for harmonic restrain	(20 or 32)% of fundamental level	
Weak end infeed voltage check $3U_0$	 (5-70)% of 110 / √3 in steps of 1%	
Coordination timer tCoord	(0 - 150) ms in steps of 1	
Characteristic angle	65° lagging	
Normal inverse characteristic	k = (0,05-1,1) in steps of 0,01	IEC 255-3 class 5 ± 60 ms
Very inverse characteristic	k = (0,05-1,1) in steps of 0,01	IEC 255-3 class 7,5 ± 60 ms
Extremely inverse characteristic	k = (0,05-1,1) in steps of 0,01	IEC 255-3 class 7,5 ± 60 ms
Logarithmic characteristic $t = 5,8 - 1,35 \times \ln \frac{I}{3I_0}$		± 5% of t at I = (1,3-29) x $3I_0$
Rated voltage	110 / √3 V	

Table 29: Sensitive earth-fault protection (I cosφ principle)

Function	Value	Setting range	Accuracy
Rated voltage	110 V		
Rated frequency	50/60 Hz		
Auxiliary dc voltage	48 - 55 V 110 - 125 V 220 - 250 V		
Characteristics angle α		0° or -90°	0° ± 0,6° at U = 110 V -90° ± 5° at U = 110 V
Operating current		(3-120) mA	

Table 30: Sensitive earth-fault protection (Transient principle)

Function	Value	Setting range
Rated voltage	110 V	
Rated frequency f_r	50 Hz	
Auxiliary dc voltage	48 or 110 V	
Transient current		(3-15) mA, 200 Hz (10-50) mA, 200 Hz
Transient voltage		3 V, 200 Hz
Neutral point voltage		(10-30) V
Reset ratio	> 90%	
Operate times directional detection start operation	 < 2 ms 130 ms	
Power consumption current circuit voltage circuit auxiliary dc voltage	 0,03 mVA at I = Imin 0,5 VA at 110 V, 50 Hz < 5 W	

Table 31: Breaker failure protection

Function	Setting range
Operating current (one measuring element per phase)	(10-200)% of I_r in steps of 1%
Retrip time delay t1	(0-150) ms in steps of 1 ms
Back-up trip time delay t2	(50-400) ms in steps of 1 ms
	Value
Trip operate time	max 18 ms
Operate time for current detection	max 10 ms

Ordering

The basic version of REL 511 is a phase-to-phase and phase-to-ground line distance protection terminal with five impedance measuring zones and separate general fault criteria. Independent time overcurrent protection is included as well.

Ordering Number: 1MRK 000 492-AA **Quantity:** ☐

Basic data:

Frequency, f_r	50/60 Hz
Ac voltage, U_r	100/110/115/120 V
Dc voltage, EL	48/60/110/125/220/250 V

Basic data to specify:

Rated current, I_r	☐ 1A	☐ 5A		
Interface dc voltage, RL 1	☐ 24/30 V	☐ 48/60 V	☐ 110/125 V	☐ 220/250 V

Options:

I/O extension modules, each with 8 inputs and 12 signalling output relays.
Totally 2 I/O modules can be selected.

Quantity (specify interface dc voltage RL2 below) 1 ☐ 2 ☐

Interface dc voltage, RL2:

☐ 24/30 V	☐ 48/60 V	☐ 110/125 V	☐ 220/250 V
1MRK 000 173-GA	1MRK 000 173-AB	1MRK 000 173-BB	1MRK 000 173-CB

Scheme communication logic + Curr Rev. + WEI	☐ 1MRK 000 231-AA
Phase preference logic	☐ 1MRK 000 232-AA
Single-phase tripping	☐ 1MRK 000 233-AA
Automatic switch onto fault logic	☐ 1MRK 000 234-AA
Fuse failure (zero + negative sequence quantities) and CT supervision function	☐ 1MRK 000 235-AB
Power swing blocking	☐ 1MRK 000 236-AA
Atorecloser (only one alternative can be selected):	
Three-phase	☐ 1MRK 000 237-AA
Single- and/or three-phase	☐ 1MRK 000 238-AA
Synchrocheck and energizing check	☐ 1MRK 000 247-AA
Breaker failure protection	☐ 1MRK 000 239-AA
Earth-fault overcurrent protection (only one alternative out of six can be selected):	
Non-directional	☐ 1MRK 000 240-AA
Directional	☐ 1MRK 000 241-AA
Directional comparison or non-directional	☐ 1MRK 000 489-AA
4-step earth fault overcurrent protection	☐ 1MRK 000 299-AA
Sensitive earth-fault protection mounted in RHGS6 box with window door:	
Sensitive, directional element, transient (RXPF 4)	☐ 1MRK 000 449-AA
Frequency f_r ☐ 50 Hz ☐ 60 Hz	
DC voltage, EL ☐ 48 V ☐ 110/125 V ☐ 220 V ☐ 250 V	
Sensitive, directional element, transient (RXPG 4)	☐ 1MRK 000 449-BA
Frequency f_r 50 Hz	
DC voltage, EL ☐ 48 V ☐ 110 V	
Current scale ☐ 3-15mA ☐ 10-50 mA	
Under/Overvoltage protection	☐ 1MRK 000 248-AA
System supervision functions	☐ 1MRK 000 242-AA
Fault locator	☐ 1MRK 000 243-AA
Event recorder	☐ 1MRK 000 244-AA
Disturbance recorder (only one alternative can be selected):	
Disturbance recorder	☐ 1MRK 000 245-AA
Disturbance recorder with extended memory	☐ 1MRK 001 375-AA
On-line control function (10 signals)	☐ 1MRK 000 229-AA
Simulation logic	☐ 1MRK 000 228-AA
Remote communication (SMS/SCS)	☐ 1MRK 000 246-AA

Bus connection unit for remote communication, type SPA-ZC21 (one for each port if used):

Transmitter	Receiver	Quantity:		
Plastic	Plastic	1 ☐	2 ☐	1MRK 000 194-AA
Plastic	Glass	1 ☐	2 ☐	1MRK 000 194-BA
Glass	Plastic	1 ☐	2 ☐	1MRK 000 194-CA
Glass	Glass	1 ☐	2 ☐	1MRK 000 194-DA

COMBITEST test switch module RTXP 24 mounted with the terminal in RHGS6 case with window door ☐ 1MRK 000 371-CA

☐ Internal earthing ☐ External earthing

On/Off switch for the dc-supply ☐ RK795 017-AA

Mounting details with IP40 degree of protection from the front:

19" rack	☐ 1MRK 000 020-BR
Wall mounting	☐ 1MRK 000 020-DA
Flush mounting	☐ 1MRK 000 020-Y
additional for IP54 (protection terminal only)	☐ 1MKC 980 001-2
Semi-flush mounting	☐ 1MRK 000 020-BS
additional for IP54 (protection terminal only)	☐ 1MKC 980 001-2
No mounting details	☐

Accessories:

User's Guide for REL 511 * 1.2	**Quantity:**	☐	1MRK 506 002-UEN
Front connection cable for PC (Opto/9-pol D-sub)	**Quantity:**	☐	1MKC 950 001-1
SMS-BASE, version 2.0, Basic program for SMS and PC front connection	**Quantity:**	☐	RS 881 007-AA
SM/REL 511 SMS Program module for REL 511 * 1.2	**Quantity:**	☐	1MRK 000 314-BB
RECOM Disturbance collection program, version 1.3	**Quantity:**	☐	1MRK 000 077-DB
REVAL Disturbance evaluation program, english version	**Quantity:**	☐	1MRK 000 078-AA
CAP 531 - Graphical configuration tool	**Quantity:**	☐	1MRK 000 876-KA
CAP/REL 511, CAP program module for REL 511 * 1.2 [1)]	**Quantity:**	☐	1MRK 000 876-BA

[1)] SMS-BASE and SM/REL 511 is required

For our reference and statistics we would be pleased if we are provided with the following application data:

Country: End user:

Station name: Voltage level: kV

Sample specification

Protection terminal intended for the protection of overhead lines and cables in the distribution and subtransmission networks. Distance protection function is a main function, and directional or non-directional earth-fault overcurrent protection is an optional complement for solidly earthed networks. Sensitive earth-fault protection, operating on a W-metric or transient (Wischer) principle, must also be available. The fault location function included as an option should have an accuracy of better than 2% and it should not depend on the fault resistance, load current or the supply of a fault from the different sources. The design should be microprocessor-based with at least one microprocessor for each basic protection function.

Remote communication with the line protection terminal should be possible from two different locations and independent one on another.

A distance protection function should contain up to five independent impedance measuring zones with quadrilateral characteristics and independent settings of the reach in reactive and resistive direction, separately for phase-to-earth and for multi-phase faults. The directionality of all zones, independent one another, should be programmable. An earth return compensation should be automatically settable independently for each impedance zone, to suit the requirements for the distance protection of the multi-circuit parallel operating lines.

Separate measuring elements shall provide a general fault criteria, independent on the zone measuring elements. Their operating characteristics should be advanced, including a settable safety load impedance area.

The line protection terminal should also be appropriate for the protection of lines within complex network configurations. The full scheme design must assure reliable operation for simultaneous and intersystem faults on multi-circuit lines as well as for the different evolving faults.

The maximum operating time of distance protection Zone 1, specified for a SIR <10 and faults within 50% of a set reach, must not exceed 45 ms and must be given in the isochronical diagrams measured for the protection terminal connected to capacitive voltage transformers. The characteristic of distance zone 1 in reactive direction must be compensated for a load current. The memory voltage for the proper directional discrimination at close-in three-phase faults should be based on a positive sequence voltage.

It must be possible to select between the directional and non-directional version when choosing the earth-fault overcurrent protection function for solidly earthed networks. The operation should be based on a measurement of the zero-sequence quantities on a protected line. The time delay should be selectable between independent time characteristics and all standardized dependent ones.

A wide range of permissive tripping and blocking scheme communication logics should be available for the distance protection. A line protection terminal should provide the user locally with complete information on the last ten disturbances, and remotely with at least 150 time-tagged events per recorded disturbance. A disturbance recorder with a minimum of 10 seconds of recording time for at least 10 disturbances, should provide the user with time-tagged disturbance records. At least 10 analogue and 48 binary signals must be recorded with a sampling rate that guarantees the presentation of a fifth harmonic component of any recorded analogue signal. Local man machine communication should be based on a user-friendly, menu-structured program, and performed by the use of a permanently installed man machine interface unit, type tested together with a line protection terminal.

The prefault and fault values of currents and voltages must be available for fault analyzing purposes. Remote communication should be possible via a local fibre optical network and the standard CCITT telephone network. Corresponding computer programs must be available. The remote setting of the different setting parameters within at least four groups of setting parameters must be possible.

The monitoring and controlling of all input and output logical signals as well as tripping signals must be possible both locally and remotely. Continuous self supervision function with self diagnostic possibilities must be included in a line protection terminal.

References

Series RE 500 Mechanical design and mounting accessories	1MRK 514 003-BEN
User´s Guide REL 511 * 1.2	1MRK 506 002-UEN
Reference List REL 511	1MRK 506 002-REN
RXPE	1MRK 509 030-BEN
RXPF	1MRK 509 029-BEN
RXPG	1MRK 509012-BEN
SPA-ZC 21	34 SPACOM 22 EN1 A
SMS 010	1MRK 511 014-BEN
CAP 531	1MRK 511 034-BEN